Important Safety Instructions

When using your telephone equipment, basic safety precautions should always be followed to reduce the risk of fire, electric shock and injury, including the following:

1. Read and understand all instructions.
2. Follow all warnings and instructions marked on the product.
3. Unplug this product from the wall outlet before cleaning. Do not use liquid cleaners or aerosol cleaners. Use a damp cloth for cleaning.
4. Do not use this product near water (for example, near a bath tub, kitchen sink, or swimming pool).
4. Do not place this product on an unstable cart, stand, or table. The product may fall, causing serious damage to the product.

5. Do not place this product on an unstable cart, stand, or table. The product may fall, causing serious damage to the product.
6. Slots and openings in the cabinet and the back or bottom are provided for ventilation. To protect it from overheating, these openings must not be blocked by placing the product on the bed, sofa, rug, or other similar surface. This product should never be placed near or over a radiator or heat register. This product should not be placed in a built-in installation where proper ventilation is not provided.
7. This product should be operated only from the type of power source indicated on the marking label. If you are not sure of the type of power supply to your home, consult your dealer or local power company.
8. Do not allow anything to rest on the power cord. Do not locate this product where the cord will be abused by persons walking on it.
9. Never push objects of any kind into this product through cabinet slots as they may touch dangerous voltage points or short out parts that could result in a risk of fire or electric shock. Never spill liquid of any kind on the product.
10. To reduce the risk of electric shock, do not disassemble this product, but take it to an authorized service facility. Opening or removing cabinet parts other than specified access doors may expose you to dangerous voltages or other risks. Incorrect reassembling can cause electric shock when the appliance is subsequently used.
11. Do not overload wall outlets and extension cords as this can result in the risk of fire or electric shock.
12. Unplug this product from the wall outlet and contact VTECH under the following conditions:
    A. When the power supply cord or plug is damaged or frayed.
    B. If liquid has been spilled into the product.
    C. If the product has been exposed to rain or water.
    D. If the product does not operate normally by following the operating instructions. Adjust only those controls that are covered by the operating instructions, because improper adjustment of other controls may result in damage and will often require extensive work to restore the product to normal operation.
    E. If the product has been dropped and the cabinet has been damaged.
    F. If the product exhibits a distinct change in performance.

13. Avoid using a telephone (other than a cordless type) during an electrical storm. There may be a remote risk of electric shock from lightning.
14. Do not use this or any cordless telephone to report a gas leak in the vicinity of the leak.

If you have questions about this product, or if you're having difficulty with setup or operation, do not return your phone to the store. Call our Customer Support Center at

1-800-595-9511

In Canada, call

1-800-267-7377

SAVE THESE INSTRUCTIONS

Introduction

This is an advanced cordless telephone, capable of supporting 2 Handsets. This manual is designed to familiarize you with this cordless telephone. We strongly recommend you read the manual before using your phone.

STOP!!

If you have questions about this product, or if you're having difficulty with setup or operation, do not return your phone to the store. Call our Customer Support Center at 1-800-595-9511 In Canada, call 1-800-267-7377

Parts Check List

1. Base Unit
2. Handset
3. Handset Charger
4. Base AC Power Adapter
5. Telephone Line Cord
6. Belt Clip
7. Base Wall Mounting Bracket
8. Charger Wall Mounting Bracket
9. Owner's Manual
10. 6 AAA Cells

To purchase replacement battery cells, call VTech Communications, Inc. at 1-800-595-9511. In Canada, call VTech Telecommunications Canada Ltd. at 1-800-267-7377.

Note: Use only VTech batteries P/N 80-5380-00-00 or equivalent AAA NiMH rechargeable batteries.

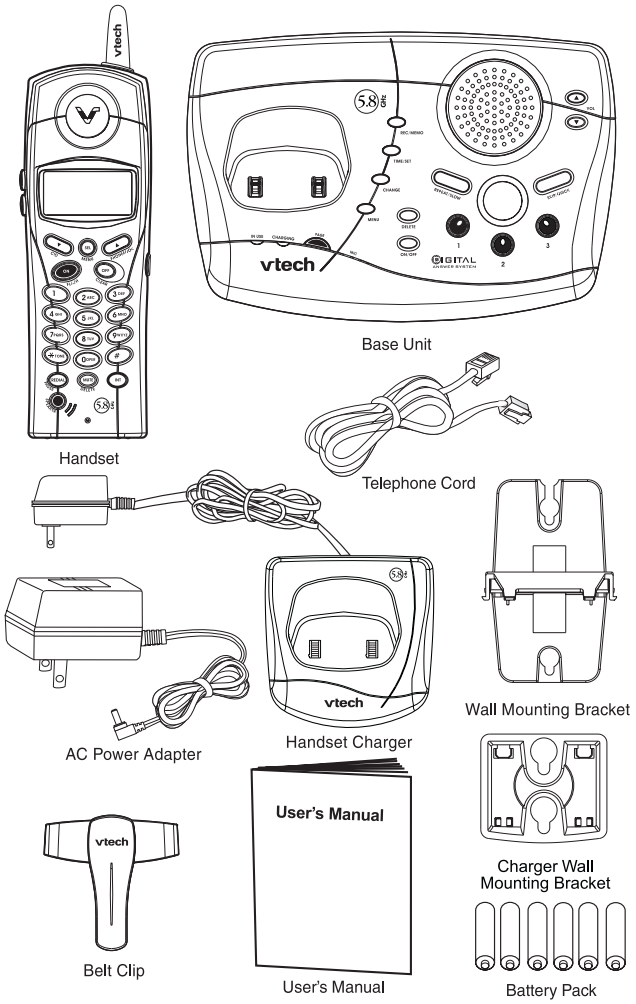

The Handset Layout

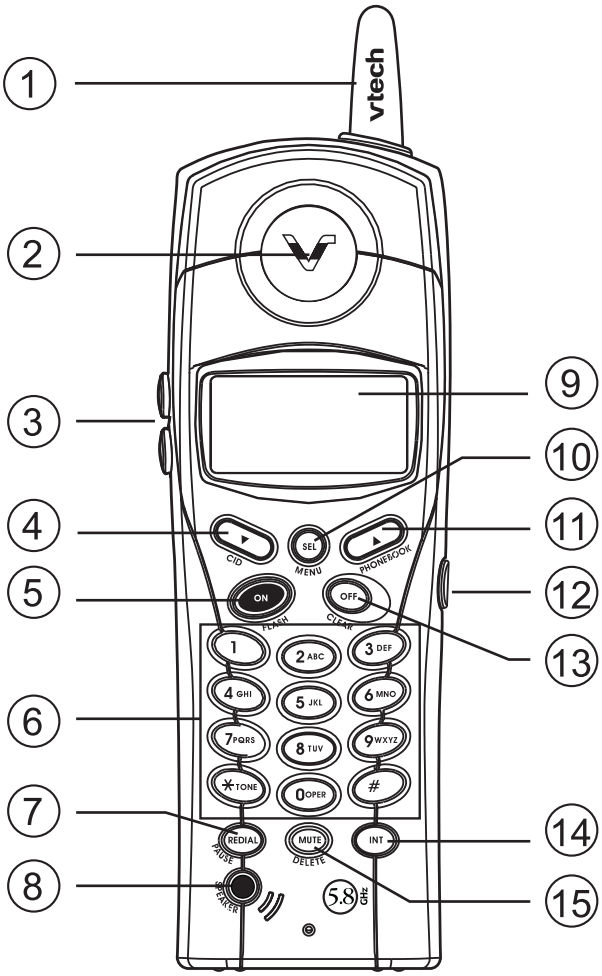

1. Antenna
2. Earpiece
3. Volume Control
4. CID
5. On (Flash)
6. Dialing Keys (0-9, *, #)
7. Redial (Pause)
8. Speakerphone
9. LCD Display
10. Select (Menu)
11. Phonebook
12. Headset jack (2.5mm)
13. Off (Clear)
14. Intercom
15. Mute (Delete)

The Base Unit Layout

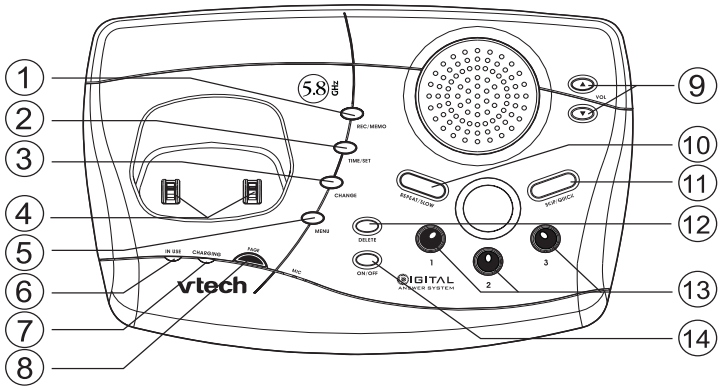

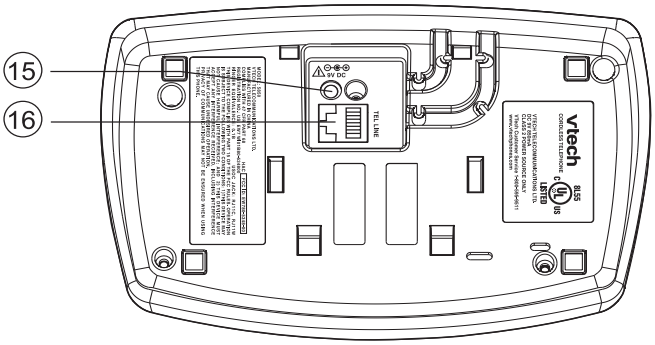

1.
2.
3.
4.
5.
6.
7.
8.
9.
10.
11.
12.
13.
14.
15.

Connecting power to Base Unit/Handset Charger

1. Plug the AC power adapter into an electrical outlet, and the DC connector into the bottom of the Base Unit.

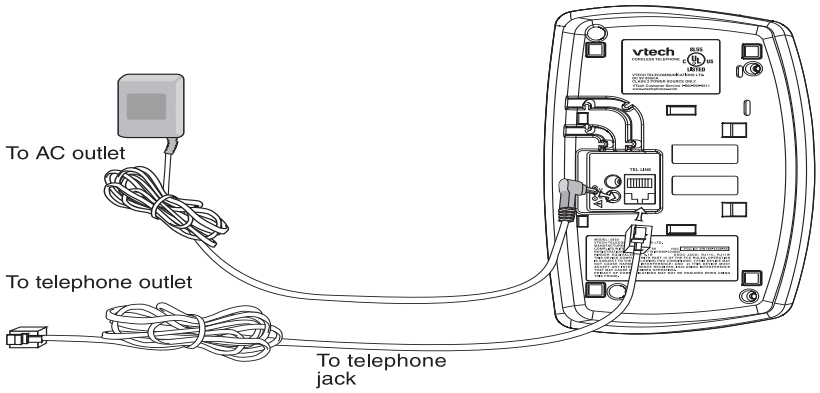

2. Choose the location for your Handset Charger, and plug its power supply into an electrical outlet.

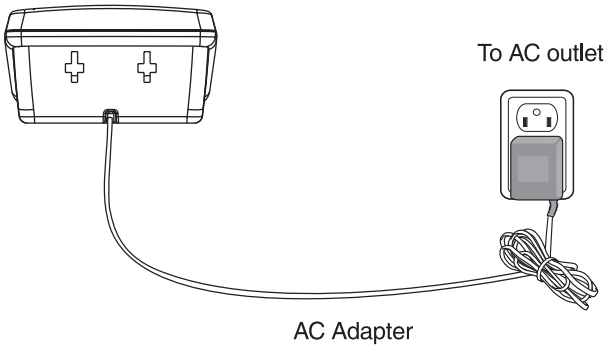

Installation of Battery Cells in Handset

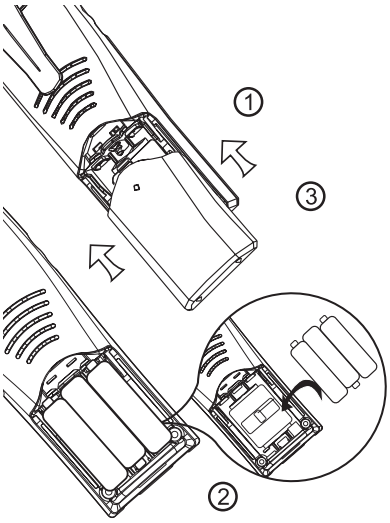

Follow the steps below:

1. Remove the battery cover by pressing on the indent and sliding downward.
2. Place the new battery cells in the Handset with the positive and negative poles aligned in the battery compartment.
3. Replace the battery cover by sliding it upwards.
4. If the new battery cells are not already charged, place the Handset in its Charger, and allow it to charge for 12 hours. After initial charge, a maintenance charge of 8 hours should be sufficient.

Charging of the Handset Battery Cells

The Handset of your cordless telephone is powered by rechargeable battery cells. It charges automatically whenever the Handset is in its charger.

You should charge the battery pack for 12 hours when you first receive your phone. You'll know the battery pack needs charging when:

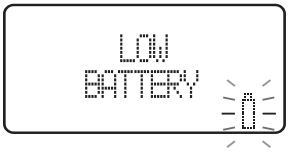

- The low battery message is displayed :
- The Handset seems completely dead, the LCD is completely clear and does not activate when you press the keys.

IMPORTANT:

1. Do not dispose of battery cell in a fire, the cell may explode.
2. Do not open or mutilate the battery cell. Toxic substances may be released, causing harm to eyes or skin.
3. Exercise care in handling battery cell in order to prevent an accidental short of the charge contacts, potentially causing the battery pack to overheat.
4. Do not dispose of this battery cell into household garbage. Please refer to the information concerning proper battery recycling.

5. Do not charge the battery cell with other electrical device.

Connecting to phone line

Plug one end of the telephone line cord into the jack on the back of the Base Unit. Plug the other end of this cord into the wall jack.

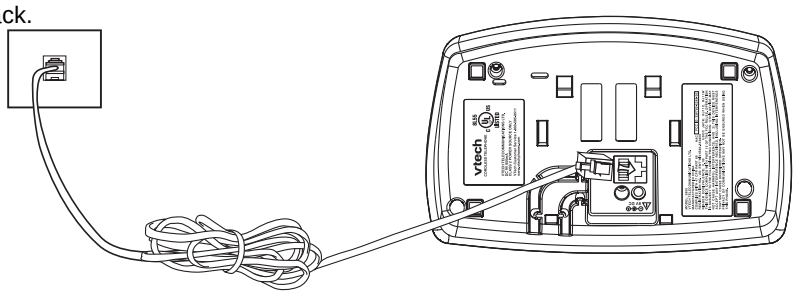

Checking for dial tone

After the battery is charged, press **ON** on the Handset. The Phone icon will appear on the Handset display, and you will hear dial tone. If not, see **In Case of Difficulty.**

Tone/Pulse selection

Your phone is preset for tone dialing. See **BASE SETTINGS** for details.

CAUTION: Use only the VTech power supply provided with your telephone.

IMPORTANT:

FOR MAXIMUM PERFORMANCE OF YOUR CORDLESS TELEPHONE SYSTEM:

1. Choose a central location for your Base Unit.
2. Install your Base Unit and Extension Handsets way from electronic equipment, such as personal computers, television sets and microwave ovens.
3. In locations where there are multiple cordless telephones, separate base units as much as possible.
4. Install your telephone equipment away from heat sources and sunlight.
5. Avoid excessive moisture, dust or extreme cold.

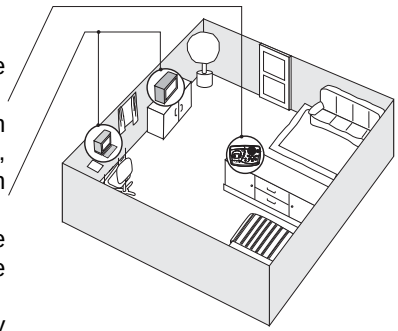

Wall Mounting

The Wall Mount brackets are designed for use on standard wall mount plates only. Wall mounting is optional.

1. Plug the AC adapters into an electrical outlet, and the DC connector to the bottom of the Base Unit.
2. Connect the telephone line cord to the jack on the bottom of the Base Unit, and the other end to the wall jack.
3. Line up the tabs on the wall mount adapters with the holes on the bottom of the Base Unit/back of the Handset Charger. Snap the wall mount bracket firmly in place.
4. Mount the Base Unit/Handset Charger on the wall. Position the Base Unit/ Handset Charger so the mounting studs will fit into the holes on the wall mount bracket. Slide Base Unit/Handset Charger down on the mounting studs until it locks into place.

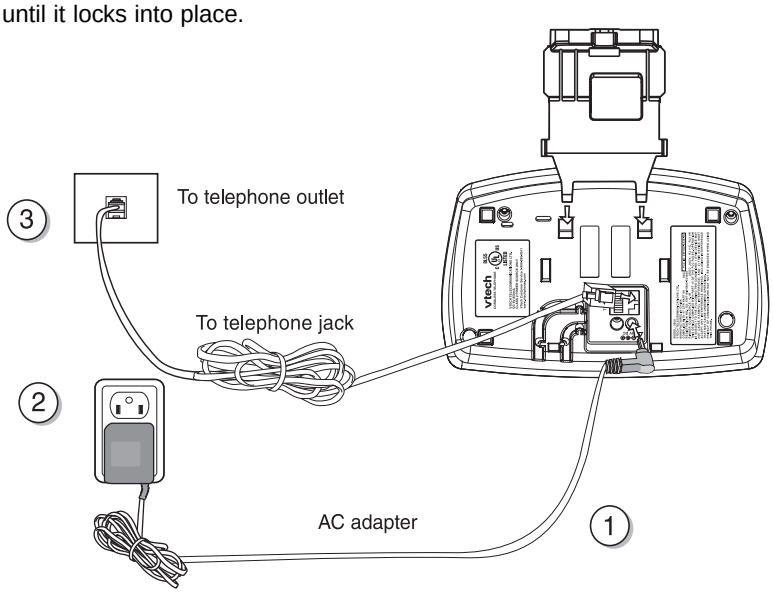

Handset and Base Indicators

Handset Icons

Icon	Description
MUTE	• Turns on when the microphone is muted
NEW	• Turns on when there are new call log entries.
18/8818:88PM	• CID date and time information
	• Turns on when the ringer is muted.
	• Low battery indicator and charging indicator

Handset and Base Indicators

Handset LEDs

LED	Description
SPEAKER	• Speaker LED (Orange) • LED is on when in a handsfree mode.

Base Unit Icons

Icon	Description

Base LEDs

LED	Description
IN USE	• On when the phone is off hook. • Flashes when an extension phone or the TAD is off hook.
CHARGING	• On when the handset is charging in the cradle.
PAGE	• Will perform a global page.
MAILBOX 1,2,3	• Flashes when new messages are in the appropriate mailbox. On when only old messages are in the appropriate mailbox. Off when no messages are in the appropriate mailbox.
VOLUME^/v	• Adjusts the ITAD speaker volume. There are 7 volume levels.
MENU	• This key is used to scroll through the ITAD menu options
CHANGE	• This key is used to select the various menu options.
TIME/SET	• When pressed in idle mode, the current time will be announced. When pressed in menu mode, the current setting will be confirmed or reviewed.
REC/MEMO	• This key will put the ITAD into record mode to record the OGM or a memo.
DELETE	• This key will cause the ITAD to erase the ICM, OGM or memo. One or all messages can be erased.
REPEAT/ SLOW	• This key is used to repeat a message or play a message slowly. If the key is pressed and released, the message will be repeated. If the key is held, the message will play back at half the normal speed.
SKIP / QUICK	• This key is used to skip a message or play a mesage quickly. If the key is pressed and released, the message will be skipped. If the key is held, the message will play back at twice the normal speed.

Making Calls

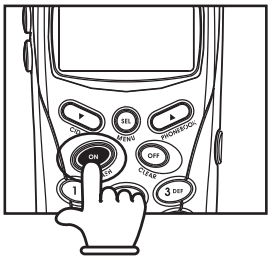

- Press **ON** (or, **SPEAKERPHONE** to use the Handset Speakerphone feature). Dial the phone number.

-OR-

- Dial the phone number first; then press **ON** (or **SPEAKERPHONE**).
- Press **OFF** to end your call

Answering Calls

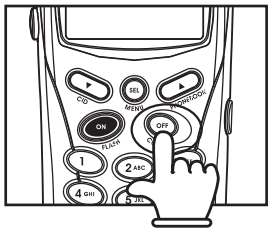

From the Handset

- Press any key except **OFF** and the softkeys.
- Press **OFF** to end your call.

Intercom Call

Pressing INT key when the handset is idle initiates an intercom call.

- Press **INT**

CALLING
OTHER HANDSET

The call is performed and when the other handset answers, the display will change to:

INTERCOM
OTHER HANDSET

If the other handset is out of range, turned off or on an external call, the display will show and a busy tone will be heard on the earpiece, or through the speaker if in handsfree mode.

UNABLE TO CALL
AT THIS TIME

An intercom call is terminated by:

- Pressing **OFF** or **INT**,
- Placing the handset in the charger

After terminating an INTERCOM CALL, the display on both handsets will show:
On the handset that did not terminate the call, a busy tone will be heard, indicating the other handset has ended the call. After several seconds the display will return to idle and the busy tone will stop.

INTERCOM ENDED

Phone Book Operation

The handsets share a common phone book, which is stored in the base station. This means that entries inserted by one handset are available for both handsets, and if one deletes a phone book entry, it will disappear from both handsets.
The phone book size will hold 50 entries, with names of a maximum length of 16 characters and a 32-digit maximum phone number.
The phone book entries are sorted and presented to the user in alphabetical order.
Names are entered using the numerical keys. Multiple key presses of the dialing digit keys is used to generate characters, see the table below. The cursor moves to the next position if another numerical key is pressed or by pressing the ▲ key. The last entered character is deleted by pressing **DELETE** or ▼. The entire name is cleared by holding down **DELETE**.

Key	**Characters by number of key presses**								
	1	2	3	4	5	6	7	8	9
1	space	1							
2	A	B	C	2	a	b	c		
3	D	E	F	3	d	e	f		
4	G	H	I	4	g	h	i		
5	J	K	L	5	j	k	l		
6	M	N	O	6	m	n	o		
7	P	Q	R	S	7	p	q	r	s
8	T	U	V	8	t	u	v		
9	W	X	Y	Z	9	w	x	y	z
0	0								
*	*	?	!	/	(	)			
#	#	‘	,	-	.	&			

The phone book is entered via the menu, as described below or by pressing the /\ key in idle (quick access key) whereby the handset jumps directly to the phone book search menu.
The phone book is accessed as follows:
1) Press **SEL**, to enter the menu.

```
>PHONE BOOK
 CALL LOG
```

2) **SEL**, to enter the Phone book sub-menu.

```
>REVIEW
 STORE
```

Storing a new entry

1) Press the ▲ key in idle, or scroll through the sub-menu with the ▲ and ▼ keys and press **SEL** with "STORE" in the first line.

```
>STORE
REVIEW
```

2) If the phone book is full the screen will show,

```
PHONEBOOK IS
   FULL
Pause MENU MEM
```

3) If the phone book is not full, the user will be prompted to enter the phone number to be stored as shown below:

```
STORE NUMBER
                _
```

4) Enter the number, up to 32 digits. Press **DELETE** to backspace.

```
STORE NUMBER
       123-3457-
```

In cases the number exceeds 16 digits, the top line will be used to show the entire number.

```
            1234
5678901212345 67_
```

5) Press **SEL** to confirm the number. If there is duplicate number in the phone book, the screen will show:

```
NUMBER ALREADY
IN PHONE BOOK!
```

and the Handset will return to the 'STORE NUMBER' screen. If the number is unique, you will move to the name entry screen,

```
STORE NAME
_
```

6) Enter the associated name. Use 1 to add a space and **DELETE** to backspace.

```
STORE NAME
John Smith_
```

7) Press **SEL** to confirm the name. A name must be entered, or you cannot proceed to the next step. Unlike phone numbers, duplicate names are allowed. The new record will be stored in the phone book.

```
John Smith
<* 789012123456 7
```

The user can press **CLEAR** to return to the phone book operation screen, which will show the last operation:

```
>STORE
REVIEW
```

Dialing from the phone book

A number can be recalled and dialed from the phone book by:

1) Press the ▲ key in idle, or scroll through the menu with the ▲ & ▼ keys and press **SEL** with "**REVIEW**" in the first line. The first phone book entry will be shown.

```
Kevin James
        432-5434
```

2) Scroll through the phone book entries using ▲ and ▼ keys or enter first character of the name to be searched (using the dial digit keys) and continue navigating using the ▲ or ▼ as scroll keys, until you reach the entry to be dialed.

```
John Smith
        555-1212
```

3) Press **ON** or **SPK**, to dial the number.

```
ACTIVE  00:00:10
        555-1212
```

Editing a phone book entry

1) Press the ▲ key in idle, or scroll through the menu with the ▲ & ▼ keys and press **SEL** with "REVIEW" in the first line.

```
Kevin James
        432-5434
```

2) Scroll through the phone book entries using ▲ and ▼ keys or enter first character of the name to be searched (using the dialing keys) and continue navigating using the ▲ or ▼ as scroll keys, until you reach the entry to be edited.

```
John Smith
        555-1212
```

3) Press **SEL** to enter number edit mode

```
EDIT NUMBER
       123-4567_
```

4) Edit the number as required, using the following options:

When editing or storing a number, you may do any of the following:

- Enter a digit by pressing **0-9**,

- Enter a pause by holding **REDIAL**,
- Delete a digit by pressing **DELETE**,
- Delete the entire string by holding **DELETE**,
- Position the cursor to another location by pressing ▲ or ▼,
- Insert a number from the redial list by pressing **REDIAL**.

5) Press **SEL** to confirm the number and enter name edit mode.

```
EDIT NAME
John Smith_
```

6) Edit the name as required, using the following options:
   - Enter characters using the keys 0-9, * and # (See the key/characters table),
   - Press **DELETE** to delete the character under the cursor, or to the left if at the end of the string.
   - Hold **DELETE** to delete the entire string,
   - Press ▲ and ▼ to position move to another character.

7) Press **SEL** to confirm change.

```
John Smith
        555-1212
```

Delete a phone book entry

1) Press the ▲ key in idle, or scroll through the sub-menu with the ▲ & ▼ keys and press **SEL** with "**REVIEW**" in the first line.

```
Kevin James
        432-5434
```

2) Scroll through the phone book entries using ▲ and ▼ keys or enter first character of the name to be searched (using the dial digit keys) and continue navigating using the ▲ or ▼ as scroll keys, until you reach the entry to be removed.

```
John Smith
        555-1212
```

3) Press **DELETE** to delete the entry. The phone returns to the previous entry, or the next entry if the first entry was the entry that was deleted.

```
Kevin James
        432-5434
```

Additional note on long phone numbers.

When reviewing the phone book the second line of the display will display phone number up to 16 digits. For numbers larger than 16 digits only the last 13 digits will be displayed, as shown in the following example:

```
John Smith
<* 1234567890123
```

The "<*" indicates there are additional digits to the left, and the * key can be pressed to scroll the display over to see them.

```
John Smith
<* 7890123456 #>
```

"<" and ">" indicate additional digits of the left or right side respectively, and the keys "*" or "#" can be used to scroll the phone number to see the additional digits,

Calls Log (Caller ID - Call Waiting)

All incoming calls with valid caller ID number are stored in a call log. Name and time/date information is also stored in the call log if the central office sends it out.
The number of entries stored in the call log is indicated in idle mode:

```
    VTECH
 5 NEW CALLS
 ……
```

The number of unanswered calls (new), if any, is indicated:

```
    VTECH
 23 CALLS/5 NEW
```

The new call indication is removed when all calls in the call log have been reviewed. The NEW icon indicates, in all screens, that there are new calls log entries that have not been reviewed.
The call log is entered via the menu, as described below or by pressing the ▼ key in idle (quick access key) whereby the handset jumps directly to the call log review.

```
>PHONE BOOK
 CALL LOG
```

The call log is reviewed as follows:
1) Press **SEL**, to enter the menu.

2) Press ▼ to get to the call log option

```
>CALL LOG
 QUICK DIAL
```

3) **SEL**, to enter the **CALL LOG** menu.

4) The caller name is shown in the first line of the display, and the number in the second line. If time and date information is contained in the CID and there are three lines in the display, it is shown in the third line.

```
    John Smith
123-4567
   2/2311:59
```

The name contained in the received CID is replaced by the name in the phone book, if the phone book contains a matching number, i.e. the phone book name takes precedence.

5) Scroll through the Call Log entries using ▲ and ▼ keys.

```
 A. Person
       555-1212
   2/2311:57
```

The following actions are possible from the Call Log:

- Dialing the caller displayed by pressing the **ON** or **SPK** keys.
- Deleting the caller displayed by pressing the **DELETE** key. The phone returns to call log review.
- Deleting all entries in the call log by pressing and holding **DELETE**. After this, you will be asked for confirmation by either accepting the deletion with **SEL** (= yes) or canceling it with **OFF** (= no).

If you press SEL, all entries in the call log will be deleted and the handset indicates the call log is empty and then returns to the idle state. If you select OFF, the phone returns to the last viewed entry.

```
DELETE ALL
CALL LOG?
```

- Storing the caller displayed in the phone book by pressing the **SEL** key. If the call log entry has a name and a number it will be added to the phone book and the screen will show:

```
 ADDED TO
PHONE BOOK
```

before returning the call log entry.
If the phone number already exists in the phone

book, the entry will not be stored, and the screen will show:

```
NUMBER ALREADY
IN PHONE BOOK!
```

If there is no room in the phone book for the new entry, the display will show:

```
PHONE BOOK
IS FULL!
```

If the call log entry is missing a name or number, you will be prompted to enter one before the item is stored in the phone book.

If both a name and number is missing, for example as in a private listing, the request will be rejected with the message:

```
UNABLE TO SAVE
IN PHONE BOOK!
```

- Exit the Call Log review by pressing the **OFF** key.
- '!'-character in the right hand side of the first line indicates that the call has not previously been reviewed. The '!'-character is cleared when stepping to the next entry in the log or when leaving the call log.
- The maximum length of the name shown in the first line is 16 characters. If the name as received is longer, only the first 16 characters will be seen.
- The incoming calls are sorted by the order of arrival; the latest is shown first. Calls from the same number will each have separate call log entries.

If the call log is full, the oldest entry is deleted to make room for the new call. If the call log is empty when the user tries to enter to Call log review, a message the following message is displayed:

```
CALL LOG
IS EMPTY!
```

It is possible to change the number format in the call log before storing the name/number in the phone book or dialing the caller. Pressing the '#' key will toggle the number format. The available number formats depend on the number of digits received number.

Quick Dialing

Up to 10 ‘quick dial ‘numbers may be entered into each handset. It is possible to ‘quick dial’ numbers with just a single key press.

The quick dial list in each handset is unique to that handset and is not shared with the other handset.

Entering a Quick Dial number

1) Press **SEL** when the handset is idle to enter the menu system.

```
>PHONE BOOK
 CALL LOG
```

2) Move down to the quick dial option by pressing the ▼ key.

```
>QUICK DIAL
 RING VOLUME
```

3) Then press **SEL** to enter the quick dial sub menu.

```
SELECT QUICK
DIAL NUMBER
```

4) Select a quick dial key location using the 0-9 keys. If that location is empty the screen will show:

```
QUICK DIAL x
  IS EMPTY!
```

where ‘x’ is the location that was selected (0-9). At this point pressing **OFF** will return you to the quick dial select screen as shown in Step 2, or pressing **SEL** will allow you enter a phone number into the selected location. The user will then be prompted to enter a phone number to be dialed, as shown,

```
STORE NUMBER
                ...
```

A phone number can be entered in much the same way as the phonebook. The following options are also available, if the displayed number has no digits:

- Press ▲ to select an entry from the phone book.

You are presented with the phone book review screen. You can navigate to a desired entry as

described in the phone book section. Pressing **SEL** will copy the stored number to the quick dial number.

- Press ▼ to select an entry from the call log.

You are presented with the call log review screen. You can navigate to a desired entry as describe in the call log section. Pressing **SEL** will copy the phone number shown into the quick dial number.

- Press **RDL** to select an entry from the redial list.

You are presented with the call log review screen. You can navigate to a desired entry as describe in the call log section. Pressing **SEL** will copy the phone number shown into the quick dial number.

If all cases, while reviewing phone book, call log or redial list to copy to the quick dial, pressing **OFF** will return the user to the quick dial number entry screen.

5) The user presses **SEL** to confirm the number. Once confirmed, a quick dial number cannot be edited, only dialed or deleted.

Reviewing quick dial numbers

1) Press **SEL** when the handset is idle to enter the menu system

```
>PHONE BOOK
 CALL LOG
```

2) Move down to the quick dial option by pressing the ▼ key,

```
>QUICK DIAL
 RING VOLUME
```

3) Then press **SEL** to enter the quick dial sub menu.

```
SELECT QUICK
DIAL NUMBER
```

4) Select a quick dial key location using the 0-9 keys. If that location has a number assigned to it, it will be displayed as follows:

```
John Smith
1-234-567-8901
```

or

```
555-1212
```

At this point, you have the following options:

- Press **OFF** to return to the main menu.
- Press **0-9** to review another quick dial location.
- Press **SEL** to edit the currently shown location. The procedure to edit the number is the same as for editing a phone book number.
- Press **DEL** to delete the currently shown location. The following will be shown:

```
CONFIRM DELETE
QUICK DIAL x
```

Where x is the quick dial location number. Pressing **OFF** will return to the quick dial review as shown above. Pressing **SEL** will confirm the deletion and

```
QUICK DIAL x
  IS EMPTY!
```

will be shown, indicating the location has been deleted.

- Press **ON** or **SPK** to dial the displayed number.

Dialing a Quick Dial number

A quick dial number can be dialed in two ways.

1. While reviewing the quick dial numbers as previously shown.

2. While the handset is idle or in pre-dial, as follows:

While the handset is idle the user can perform a quick dial by holding down the desired quick dial location key (0-9). If the location is empty then
will be shown for a few seconds before returning to the idle or pre-dial screen.

```
QUICK DIAL
NOT ASSIGNED!
```

If the location does have an entry, then that number will be added to any pre-dialed digits and the phone will go off-hook and begin dialing.

Audio Volume

Audio volume is adjusted during an active call by the following key sequence:

Pressing the volume ▲ or ▼ keys on the side of the unit. Separate volume settings are maintained for normal, handsfree and headset modes. When the volume keys are pressed during a call the screen will show:

```
VOLUME
▮▮▮▮▮
```

As the volume is increase the number of blocks shown will increase. As the volume is decreased fewer blocks will be shown.

Ring Volume

The volume of the ringer signal can be adjusted by the following key sequence:
1) Press **SEL**

```
>PHONE BOOK
 CALL LOG
```

2) Press the ▼ key until the following is shown on the display.

```
>RING VOLUME
 RING TONE
```

3) Press **SEL** to enter the ring volume sub-menu.

```
RING VOLUME
▮▮▮▮▮
```

4) Enter volume 0 - 6, or adjust using ▲ and ▼ keys. The current ring tone/melody is played

each time the setting is adjusted.

5) Press **SEL** to confirm the setting.

```
>RING VOLUME
 RING TONE
```

With no bars displayed (Volume Level 0), the ringer has been turned **OFF**.

```
RING VOLUME
```

A “ringer off” ICON is shown in the display when the ringer has been switched off.

```
VTECH
```

Ring tone

The ring tone of an incoming external/intercom call can be changed by the following key sequence:

1) Press **SEL**

```
>PHONE BOOK
 CALL LOG
```

2) Press the ▲ or ▼ keys until the **RING TONE** option is shown as follows:

```
>RING TONE
 KEY CLICK
```

3) Press **SEL**, to enter the ring pattern menu.

4) Press the ▲ & ▼ keys followed by the **SEL** key to choose either **OUTSIDE** or **INTERCOM** ring tone setting.

```
OUTSIDE RINGER
1
```

or

```
INTERCOM RINGER
1
```

5) Enter setting 0 - 9, or adjust using ▲ and ▼ keys. When changed the indicated ring tone will be played in the speaker.

6) Press **SEL**, to confirm the setting.

```
>INTERCOM CALL
 OUTSIDE CALL
```

Key Click (preset to ON)

When you press a key on the Handset, you hear a confirmation 'click'. You can turn this feature Off and On by doing the following:

1) Press **SEL**

```
>PHONE BOOK
 CALL LOG
```

2) Press the ▲ or ▼ key until the KEY CLICK option is shown as follows:

```
>KEY CLICK
 HANDSET NAME
```

3) Press **SEL**, to enter the key click sub-menu.

```
KEY CLICK
IS ON
```

4) Enable key click by pressing **1** or ▲, or disable key click by pressing the 0 or ▼ key.

```
KEY CLICK
IS OFF
```

5) Press **SEL**, to confirm the setting.

```
>KEY CLICK
 HANDSET NAME
```

Handset Name

It is possible to gives each handset its own unique name. The name is shown in the first line during idle replacing the "**VTECH**", normally shown when the Handset is idle.
The name can be a maximum of 16 characters in length.

The handset naming procedure is as follows:

1) Press **SEL**

```
>PHONE BOOK
 CALL LOG
```

2) Press the ▲ or ▼ keys until the **HANDSET NAME** option is shown as follows:

```
>HANDSET NAME
 LANGUAGE
```

3) Press **SEL**, to enter the handset name sub-menu.

```
HANDSET NAME
_
```

4) Enter Handset name (characters are entered in the same way as for the phone book).

```
HANDSET NAME
Kitchen_
```

5) Press **SEL**, to confirm the setting.

```
>HANDSET NAME
 LANGUAGE
```

When returning to idle the display shows:

```
     Kitchen
```

Language (preset to English)

You can change the language on the Handset display:

1) Press **SEL**

```
>PHONE BOOK
 CALL LOG
```

2) Press the ▲ or ▼ key until the **LANGUAGE** option is shown as follows:

```
>LANGUAGE
 CLR MSG WAITING
```

3) Press **SEL**, to enter the language selection menu. The current language is shown in the second line. Select Spanish, French or English by pressing ▲ or ▼ key.

```
LANGUAGE
ENGLISH
```

4) Press **SEL**, to confirm the setting. The phone returns to the previous menu.

```
>LANGUAGE
 CLR MSG WAITING
```

Message Waiting

Your telephone can detect a Visual Message Waiting signal, generated by many telephone service providers. If you subscribe to Voice Mail service from your local telephone company (fee required), and a Visual Message Waiting signal is provided, the Handset will display **MESSAGES WAITING**, alerting you to new messages.

Once you have reviewed all new messages, the Messages Waiting alert will automatically be turned off.

Clear Message Waiting

If, after reviewing all new voice mail messages, the Messages Waiting alert still remains on the screen, the Messages Waiting indication can be manually removed from the display by the following sequence:

1) Press **SEL**

```
>PHONE BOOK
 CALL LOG
```

2) Press the ▲ or ▼ keys until the **CLR MSG WAITING** option is shown as follows:

```
>CLR MSG WAIT
 DIAL TYPE
```

3) Press **SEL**, to enter the message menu.

```
CLEAR MSG WAIT
CONFIRM?
```

4) Confirm clearing of the message waiting indication by pressing **SEL** (= yes), or cancel clearing by pressing **OFF** (= no). After this the phone returns to the previous menu.

```
>CLR MSG WAIT
 DIAL TYPE
```

Dial Method (preset to DTMF-Tone)

It is possible to change the method of dialing between DTMF (Tone) and pulse dialing, if your local phone company requires pulse dialing in your area:

1) Press **SEL**

```
>PHONE BOOK
 CALL LOG
```

2) Press the ▲or ▼ keys until the DIAL TYPE option is shown as follows:

```
>DIAL TYPE
 PHONE BOOK
```

3) Press **SEL**, to enter the dial sub-menu.

```
>DIAL TYPE
 DTMF
```

4) Press ▲ or ▼ to choose the method of dialing , the display looks like the one below

```
>DIAL TYPE
 PULSE
```

5) Alternately the user can select pulse dialing by pressing **1** or ▲. Select DTMF dialing by pressing **0** or ▼.

6) Press **SEL** to confirm the setting.

```
>DIAL TYPE
 PHONE BOOK
```

Temporary Tone

When the phone is set for pulse dial mode, it is possible to switch to temporary DTMF-Tone mode during an ongoing call by pressing * . Once pressed, DTMF will be used for the rest of the call. After you hang up, the phone will return to pulse dialing for the next call.

Call Forward & Call Transfer

An external call can be forwarded or transferred from one handset to the other handset. The difference between forward and transfer depends on if the sending handset needs to talk with the receiving handset, before the external call is actually sent to the other handset.

Call Forward

A handset on an external call can forward it to the other handset by holding down the **INT** key. The display will initially show:

```
SENDING CALL TO
 OTHER HANDSET
```

If the base can connect to the other handset, the display will change to:

```
 CALL SENT TO
OTHER HANDSET
```

And then return to the idle display.

If the base cannot find the other handset as a result of it being out of range or powered off, the display will show:

```
 OTHER HANDSET
 NOT AVAILABLE
```

And the external will 'call back' to the handset.

Call Transfer

An external call is transferred by:

1. Press INT key (the external call is put on hold)
2. Destination handset will ring, showing an intercom call.
3. Pressing the ON key on the destination handset will answer the intercom call.
4. Inform the person using the destination handset that they have a call on hold.
5. Press OFF, on the first handset, to transfer external call to other handset.

If there is no answer on the destination handset, the first handset can reconnect to the held call by pressing **INT** to reconnect to the external call.

Call Back

After forwarding a call, a CALL BACK is generated in the forwarding handset if the forwarded call is not answered within 30 seconds. When a call is returned to a handset, it will show the following while ringing:

```
CALL BACK
```

If the returned call is not answered within 30 seconds, the phone automatically goes on hook, dropping the external call.

Conference

It is possible to establish a conference between two handsets and the external line.

If a handset already has a connection to the external line, and another handset goes off-hook, a conference is immediately established. Both handsets will show:

```
CONF.    00:00:20
         555-1212
```

Both handsets connected to the external line are allowed to transmit DTMF digits / dialing pulses to the line.

If a handset is on the process of transferring a call to the other handset it is possible to conference with both calls by holding down the **INT** key. Holding **INT** when connected to either party, when transferring, or call toggling, will immediately conference both handsets and external line.

A handset can leave the conference by going on-hook, by pressing **OFF**, or placing the handset on the base or charging cradle. The connection continues between the remaining handset and the external party.

Redial at On-Hook state

Pressing **REDIAL** while the handset is idle or pre-dialing will access the last dialed number. Subsequent presses of **REDIAL** will access previously dialed numbers. After the fifth number the redial list will cycle back to the most recently dialed number. Alternately, you can use the ▲ and ▼ keys to scroll through the 5 previously dialed numbers.

Pressing **OFF** will cancel the redial list review.

Pressing **ON** or **SPK** will add the shown redial number to any pre-dialed digits, go off-hook and start dialing.

Pressing **SEL** add just add the shown redial to any pre-dialed digits.

Redial at Off-Hook state

Pressing **REDIAL** when on an external call will display the last dialed number. After two second the shown number will be automatically dialed. If during this time, **REDIAL** is pressed again the display will return to the external call presentation, and the number will not be dialed.

Flash

During an ongoing external call, press the **FLASH/ON** key to flash the line (to respond to a Call Waiting signal, for example).

Mute

It is possible to mute the microphone during a conversation by pressing the **DELETE/ MUTE** key. The microphone is un-muted by pressing **DELETE/MUTE** again.

In case the external line is muted, when establishing an intercom connection, the line is un-muted automatically after the intercom call is terminated. The line is also un-muted after the FLASH feature is used.

A text message in the display indicates when the microphone is first muted.

```
ACTIVE  00:00:12
MICROPHONE MUTED
 MUTE
```

The MUTE icon will also be shown whenever the microphone is muted.

```
MUTE
```

When mute is disabled, this message will briefly be shown:

```
ACTIVE  00:00:15
        555-1212
 MUTE
```

```
ACTIVE  00:00:12
 MICROPHONE ON!
```

And the MUTE icon will turn off.

Page

The page function is used as an aid to locate the handsets. It can be only done from the Base.

To activate paging the user presses the **PAGE** button on the base.

All handsets not currently active on a call will show:

```
BASE IS
PAGING!
```

and start the paging sound.

Either handset can cancel the page by pressing any of the **PHONE, 0-9, *, #** or **SPK** keys.
Or, press **PAGE** at the Base to cancel the page.