SIP Contemporary Series

CTM-S2412

SIP Contemporary Cordless 1-line Hotel Phone

CTM-S2415HC

Virtual Bundle of CTM-C4402 and C4012

SIP Contemporary Cordless 1-line Accessory Handset and Cordless charging stand

CTM-C4402

SIP Contemporary Cordless 1-line Accessory Handset

C4012

Cordless charging stand

vtech®

User's Guide

Important safety instructions

The applied nameplate is located at the bottom or rear of the product.

When using your telephone equipment, basic safety precautions should always be followed to reduce the risk of fire, electric shock and injury, including the following:

1. This product should be installed by a qualified technician.
2. This product should only be connected to the host equipment and never directly to the network such as Public Switch Telephone Network (PSTN) or Plain Old Telephone Services (POTS).
3. Read and understand all instructions.
4. Follow all warnings and instructions marked on the product.
5. Unplug this product from the wall outlet before cleaning. Do not use liquid or aerosol cleaners. Use a damp cloth for cleaning.
6. Do not use this product near water such as near a bath tub, wash bowl, kitchen sink, laundry tub or swimming pool, or in a wet basement or shower.
7. Do not place this product on an unstable table, shelf, stand or other unstable surfaces.
8. Slots and openings in the back or bottom of the telephone base and handset are provided for ventilation. To protect them from overheating, these openings must not be blocked by placing the product on a soft surface such as a bed, sofa or rug. This product should never be placed near or over a radiator or heat register. This product should not be placed in any area where proper ventilation is not provided.
9. This product should be operated only from the type of power source indicated on the marking label. If you are not sure of the type of power supply on the premises, consult your dealer or local power company.
10. Do not allow anything to rest on the power cord. Do not install this product where the cord may be walked on.
11. Never push objects of any kind into this product through the slots in the telephone base or handset because they may touch dangerous voltage points or create a short circuit. Never spill liquid of any kind on the product.
12. To reduce the risk of electric shock, do not disassemble this product, but take it to an authorized service facility. Opening or removing parts of the telephone base or handset other than specified access doors may expose you to dangerous voltages or other risks. Incorrect reassembling can cause electric shock when the product is subsequently used.
13. Do not overload wall outlets and extension cords.
14. Unplug this product from the wall outlet and refer servicing to an authorized service facility under the following conditions:
    - When the power supply cord or plug is damaged or frayed.
    - If liquid has been spilled onto the product.
    - If the product has been exposed to rain or water.
    - If the product does not operate normally by following the operating instructions. Adjust only those controls that are covered by the operation instructions. Improper adjustment of other controls may result in damage and often requires extensive work by an authorized technician to restore the product to normal operation.
    - If the product has been dropped and the telephone base and/or handset has been damaged.
    - If the product exhibits a distinct change in performance.

15. Avoid using a telephone (other than cordless) during an electrical storm. There is a remote risk of electric shock from lightning.
16. Do not use the telephone to report a gas leak in the vicinity of the leak. Under certain circumstances, a spark may be created when the adapter is plugged into the power outlet, or when the handset is replaced in its cradle. This is a common event associated with the closing of any electrical circuit. The user should not plug the phone into a power outlet, and should not put a charged handset into the cradle, if the phone is located in an environment containing concentrations of flammable or flame-supporting gases, unless there is adequate ventilation. A spark in such an environment could create a fire or explosion. Such environments might include: medical use of oxygen without adequate ventilation; industrial gases (cleaning solvents; gasoline vapors; etc.); a leak of natural gas; etc.
17. Only put the handset of your telephone next to your ear when it is in normal talk mode.
18. The power adapters are intended to be correctly oriented in a vertical or floor mount position. The prongs are not designed to hold the plug in place if it is plugged into a ceiling, under-the-table or cabinet outlet.
19. Use only the power cord and batteries indicated in this manual. Do not dispose of batteries in a fire. They may explode. Check with local codes for possible special disposal instructions.
20. In wall mounting position, make sure to mount the telephone base on the wall by aligning the eyelets with the mounting studs of the wall plate. Then slide the telephone base down on both mounting studs until it locks into place. Refer to the full instructions in Installation in the user's manual.
21. This product should be mounted at a height of less than 2 meters.
22. Listed PoE (The product is considered not likely to require connection to an Ethernet network with outside plant routing).

⚠ 📖 ⓘ CAUTIONS

- Keep small metallic objects such as pins and staples away from the handset receiver.
- There may be a risk of explosion if a wrong type of handset battery is used (CTM-S2412, CTM-C4402). Use only the supplied rechargeable battery (BT164392/BT264392) or replacement battery (BT264392). Dispose of used batteries according to the information in The RBRC® seal in this user guide.

SAVE THESE INSTRUCTIONS

Instructions de sécurité importantes

La plaque signalétique appliquée est située au bas et à l'arrière de la base du produit.

Lorsque vous utilisez votre équipement téléphonique, des précautions de base doivent toujours être prises pour réduire les risques d'incendie, d'électrocution et de blessure, notamment les suivantes

1. Ce produit doit être installé par un technicien qualifié.
2. Ce produit ne doit être connecté qu'à l'équipement hôte et jamais directement au réseau tel que le réseau téléphonique public commuté (RTPC) ou les services téléphoniques classiques (POTS).
3. Lire et comprendre toutes les instructions.
4. Respecter tous les avertissements et instructions figurant sur le produit.
5. Débranchez ce produit de la prise murale avant de le nettoyer. N'utilisez pas de nettoyants liquides ou en aérosol. Utilisez un chiffon humide pour le nettoyage.
6. N'utilisez pas ce produit près de l'eau, par exemple près d'une baignoire, d'une cuvette de lavage, d'un évier de cuisine, d'une cuve de lavage ou d'une piscine, ou dans un sous-sol ou une douche humide.
7. Ne pas placer ce produit sur une table, une étagère, un support ou toute autre surface instable.
8. Des fentes et des ouvertures à l'arrière ou en-dessous du socle du téléphone et du combiné sont prévues pour la ventilation. Afin de les protéger contre la surchauffe, ces ouvertures ne doivent pas être obstruées en plaçant le produit sur une surface souple comme un lit, un divan ou un tapis. Ce produit ne doit jamais être placé à proximité ou au-dessus d'un radiateur ou d'un registre de chaleur. Ce produit ne doit pas être placé dans un endroit où une ventilation adéquate n'est pas assurée.
9. Ce produit ne doit être utilisé qu'avec le type de source d'énergie indiqué sur l'étiquette de marquage. Si vous n'êtes pas sûr du type d'alimentation électrique sur place, consultez votre revendeur ou votre compagnie d'électricité locale.
10. Ne laissez rien reposer sur le cordon d'alimentation. N'installez pas ce produit à un endroit où l'on pourrait marcher sur le cordon.
11. N'introduisez jamais d'objets de quelque nature que ce soit dans ce produit par les fentes du socle du téléphone ou du combiné, car ils pourraient toucher des points de tension dangereux ou créer un court-circuit. Ne jamais renverser de liquide de quelque nature que ce soit sur le produit.
12. Pour réduire le risque d'électrocution, ne démontez pas ce produit, mais confiez-le à un service après-vente agréé. Ouvrir ou retirer des parties du socle du téléphone ou du combiné autres que les portes d'accès spécifiées peut vous exposer à des tensions dangereuses ou à d'autres risques. Un remontage incorrect peut provoquer une électrocution lors de l'utilisation ultérieure du produit.
13. Ne surchargez pas les prises murales et les rallonges électriques.
14. Débranchez ce produit de la prise murale et confiez l'entretien à un centre de service agréé dans les conditions suivantes :
    - Lorsque le cordon d'alimentation ou la fiche est endommagé ou effiloché.
    - Si du liquide a été renversé sur le produit.
    - Si le produit a été exposé à la pluie ou à l'eau.
    - Si le produit ne fonctionne pas normalement en suivant les instructions d'utilisation. Ne réglez que les commandes qui sont couvertes par le mode d'emploi. Un mauvais réglage des autres commandes peut entraîner des dommages et nécessite

souvent un travail important de la part d'un technicien autorisé pour remettre le produit en état de fonctionnement.

- Si le produit est tombé et que le socle du téléphone et/ou le combiné ont été endommagés.
- Si le produit présente un changement distinct de performance.

15. Évitez d'utiliser un téléphone (autre que sans fil) pendant un orage électrique. Il existe un risque d'électrocution dû à la foudre.
16. N'utilisez pas le téléphone pour signaler une fuite de gaz à proximité de la fuite. Dans certaines circonstances, une étincelle peut se produire lorsque l'adaptateur est branché dans la prise de courant, ou lorsque le combiné est replacé dans son berceau. Il s'agit d'un événement courant associé à la fermeture de tout circuit électrique. L'utilisateur ne doit pas brancher le téléphone dans une prise de courant, ni placer un combiné chargé dans son socle, si le téléphone est situé dans un environnement contenant des concentrations de gaz inflammables ou propices aux flammes, à moins qu'il n'y ait une ventilation adéquate. Une étincelle dans un tel environnement pourrait créer un incendie ou une explosion. Ces environnements peuvent comprendre : l'utilisation médicale de l'oxygène sans ventilation adéquate; les gaz industriels (solvants de nettoyage; vapeurs d'essence; etc.); une fuite de gaz naturel; etc.
17. Ne placez le combiné de votre téléphone près de votre oreille que lorsqu'il est en mode de conversation normal.
18. Les adaptateurs d'alimentation sont destinés à être correctement orientés en position verticale ou au sol. Les broches ne sont pas conçues pour maintenir la fiche en place si elle est branchée au plafond, sous la table ou dans une prise de courant d'armoire.
19. Utilisez uniquement le cordon d'alimentation et les piles indiqués dans ce manuel. Ne jetez pas les piles au feu. Elles risquent d'exploser. Vérifiez auprès des autorités locales les éventuelles instructions spéciales d'élimination.
20. En position de montage mural, veillez à monter le socle du téléphone sur le mur en alignant les oeillets avec les montants de fixation de la plaque murale. Ensuite, faites glisser le socle téléphonique vers le bas sur les deux montants de montage jusqu'à ce qu'il se verrouille en place. Reportez-vous aux instructions complètes dans la section Installation du guide d'utilisation.
21. Ce produit doit être installé à une hauteur inférieure à 2 mètres.
22. Listé POE (Le produit est considéré comme peu susceptible de nécessiter une connexion à un réseau Ethernet avec un routage extérieur à l'installation).

⚠ 📖 ⓘ MISE EN GARDE

- Gardez les petits objets métalliques tels que les épingles et les agrafes loin du combiné.
- Il peut y avoir un risque d'explosion si un mauvais type de pile de combiné est utilisé (CTM-S2412, CTM-C4402). Utilisez uniquement la pile rechargeable fournie (BT164392/BT264392) ou une pile de remplacement (BT264392). Éliminez les piles usagées conformément aux informations figurant dans le sceau RBRC^{MD} de ce guide d'utilisation.

CONSERVEZ CES INSTRUCTIONS

Table of contents

Important safety instructions.....2

Instructions de sécurité importantes 4

Parts check list.....7

Telephone layout 8

SIP Contemporary Cordless 1-line - CTM-S2412.....8

SIP Contemporary Cordless 1-line Accessory Handset - CTM-C4402.....8

Installation..... 10

SIP Contemporary Cordless 1-line - CTM-S2412.....10

SIP Contemporary Cordless 1-line Accessory Handset - CTM-C4402.....10

Cordless charging stand - C4012.....14

Set up 15

SIP Contemporary Cordless 1-line - CTM-S2412.....15

SIP Contemporary Cordless 1-line Accessory Handset - CTM-C4402.....15

Voice Menu 16

Operation.....17

SIP Contemporary Cordless 1-line - CTM-S2412..... 17

SIP Contemporary Cordless 1-line Accessory Handset - CTM-C4402..... 17

Appendix 20

Troubleshooting 20

VTech Hospitality Limited Warranty Program 26

Precautions for users of implanted cardiac pacemakers.....28

Operating range.....28

About cordless telephones 28

The RBRC® seal 29

FCC, ACTA and IC regulations 29

Energy-saving charging mode 32

Maintenance..... 33

Disclaimer and Limitation of Liability..... 33

Technical specifications 34

SIP Contemporary Cordless 1-line - CTM-S2412.....34

SIP comtemporary cordless 1-line accessory handset - CTM-C4402 34

Cordless charging stand - C4012.....34

Parts check list

Items contained in the respective **cordless telephone** package:

Model name	Model number	Parts included				
		Telephone base with faceplate and overlay	Base Stand | Wall Mount Bracket	Network cable	Cordless handset and Handset battery	Handset charging stand | Power adapter
SIP Contemporrary Cordless 1-line Hotel Phone	CTM-S2412		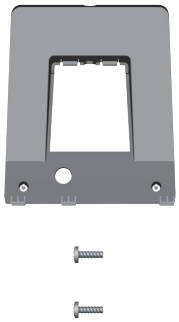	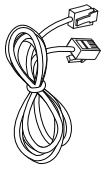		
SIP Contemporary Cordless 1-line Accessory Handset and Cordless charging stand	CTM-S2415HC (Virtual Bundle of CTM-C4402 and C4012)					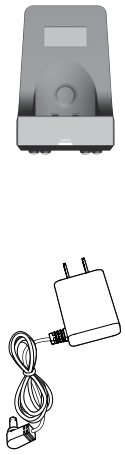

Telephone layout

SIP Contemporary Cordless 1-line - CTM-S2412

SIP Contemporary Cordless 1-line Accessory Handset - CTM-C4402

Telephone Base

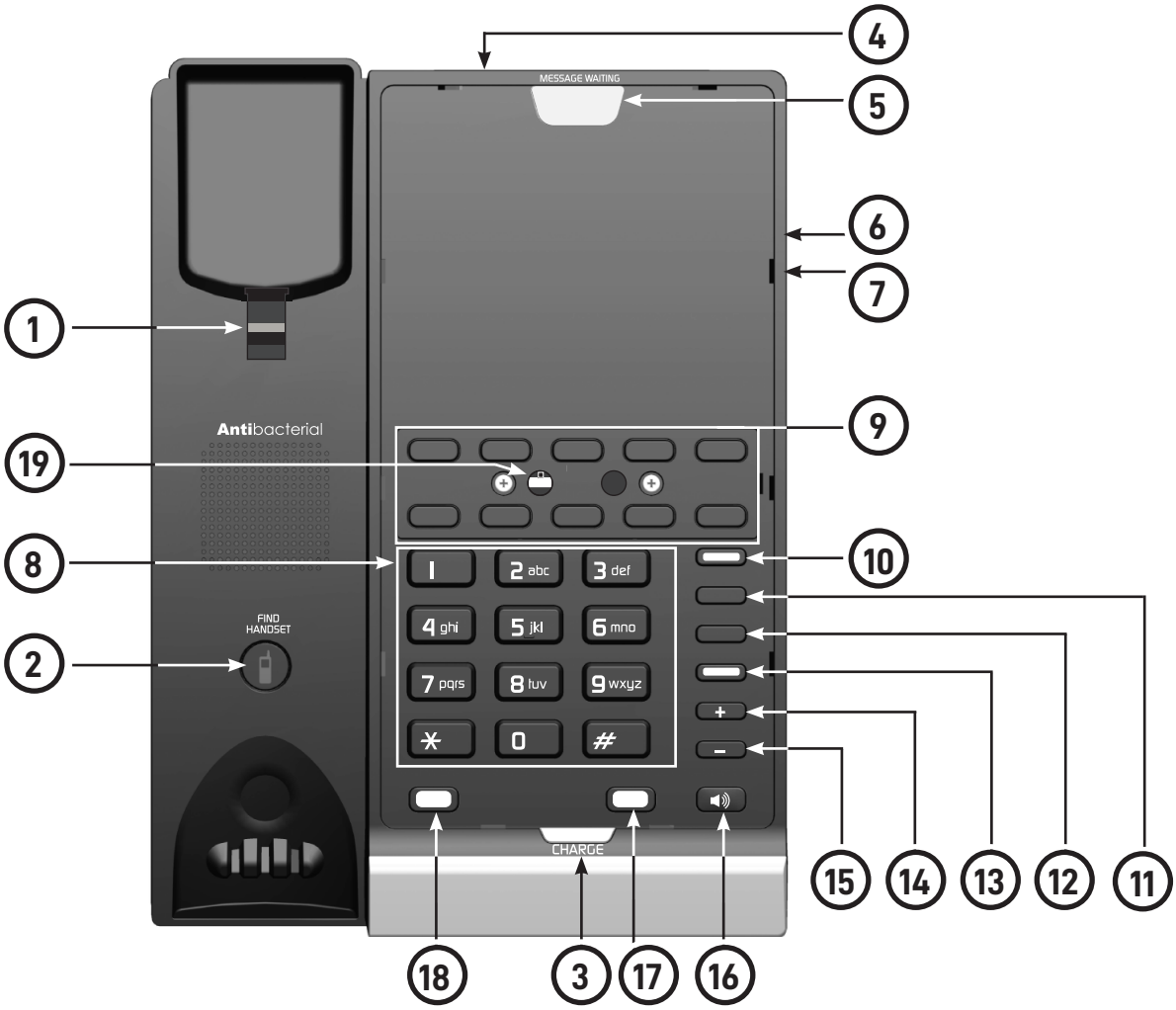

1	Wall mount clip
2	Find Handset button
3	CHARGE LED
4	RJ-45 LAN port
5	Message waiting LED
6	RJ-45 COMPUTER port
7	USB CHARGE ONLY (USB port for charging only)

8	Numeric dial keys
9	Speed dial keys
10	Speed Dial key
11	**REDIAL** key
12	**FLASH** key
13	**MUTE** key
14	**VOLUME** + key
15	**VOLUME –** key
16	**SPEAKER** key
17	**HOLD** key
18	**LINE** key
19	Base power switch

Telephone layout

SIP Contemporary Cordless 1-line - CTM-S2412

SIP Contemporary Cordless 1-line Accessory Handset - CTM-C4402

Handset

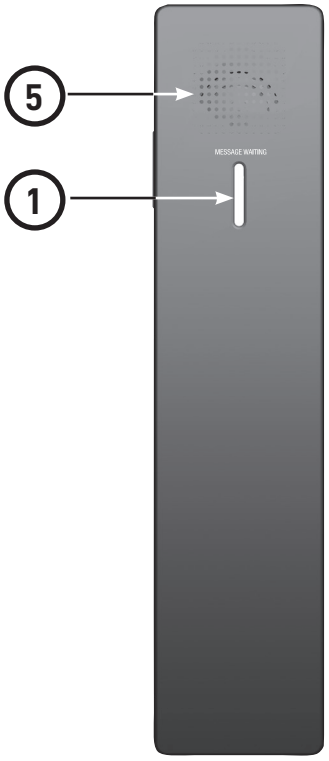

1	Message waiting LED
2	Low battery LED
3	Handset earpiece
4	Microphone
5	Speakerphone

6	**TALK/FLASH** key
7	**OFF/Cancel** key
8	Numeric dial keys
9	**SPEAKER** key
10	Speed dial keys
11	**VOLUME** +/- keys
12	**EMERGENCY** key
13	**HOLD** key
14	**MUTE** key
15	**MESSAGES** key

Cordless charging stand - C4012

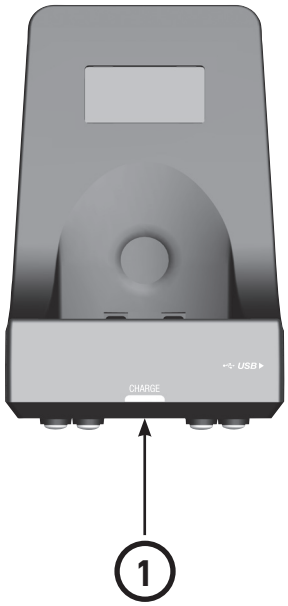

1	Charge LED

Installation

SIP Contemporary Cordless 1-line - CTM-S2412

SIP Contemporary Cordless 1-line Accessory Handset - CTM-C4402

Installation option - install base stand for desktop

To mount the telephone base on the base stand

1. Turn the telephone base over with the bottom side facing up.
2. Insert the lower tabs of the mounting bracket into the lower grooves of the telephone base.
3. Press the upper tabs of the mounting bracket and then push into the center of the telephone base until it locks into place.

Telephone base installation

The telephone comes ready for desktop use.

1. Install the telephone base as shown below.
   - Plug the Cat-5 network cable into the RJ-45 LAN port on the telephone base and the network wall jack with Power over Ethernet (PoE).

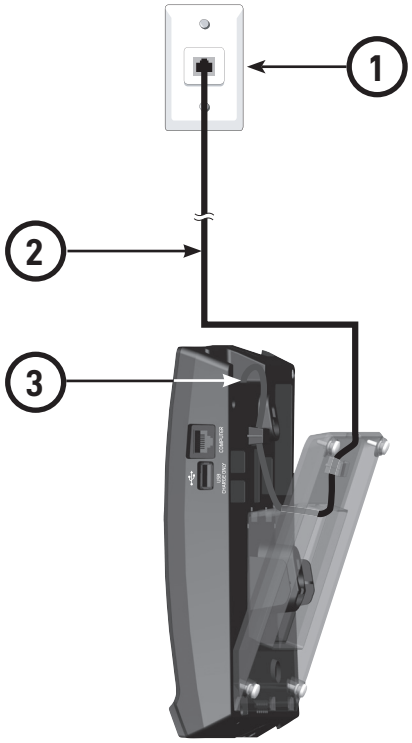

1	Network wall jack with Power over Ethernet (PoE)
2	Cat-5 network cable
3	RJ-45 LAN port

2. Once installed, the telephone begins an initialization and system registration process.

   If the system registration succeeds, the telephone base will reboot.

   If the system registration fails, the 🔊 key blinks twice every second. To reset, disconnect the Cat-5 network cable from the network wall jack with Power over Ethernet (PoE) and then reconnect.

3. Press 🔊 on the telephone base. Listen for a dial tone, and then press 🔊 again to hang up.

Note

- The dial tone will not be played if the SIP account used by this phone cannot be registered.

CAUTION:

Use only the supplied network cable. The supplied network cable is not designed for use in any other IT devices. Misusing it on your other IT devices shall be prohibited. To order a replacement, call 1-888-907-2007.

English

Installation option - converting from desktop to wall mount position

To mount the telephone base on the wall

1. Unplug the Cat-5 network cable from the network wall jack.
2. Remove the cordless handset from the telephone base if it is cradled in the telephone base. On the telephone base, press the wall mount clip upward and rotate a half turn (180°). Slide back the clip.
   - It locks into place with the protruding edge pointing towards the upper edge of the telephone base. This protruding edge holds the handset when the phone is mounted on the wall.

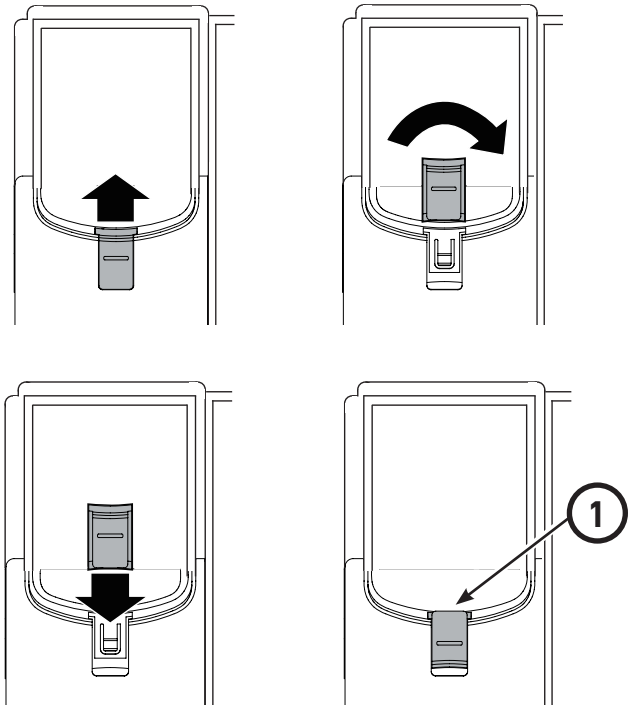

1	Protruding edge

3. Turn the telephone base over with the bottom side facing up. To remove the mounting bracket, firmly press down the tabs on the mounting bracket and pull them out from the grooves on the telephone base.

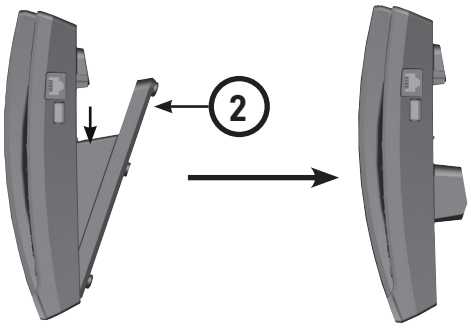

2	Mounting bracket

4. Mount the telephone base on the wall by aligning the eyelets with the mounting studs of the wall plate. Then slide the telephone base down on both mounting studs until it locks into place.

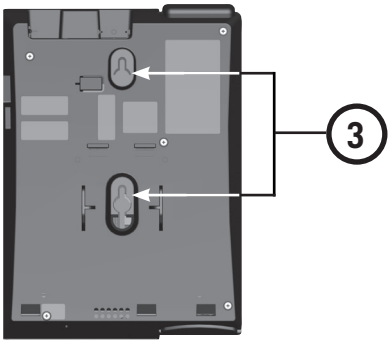

3	Eyelets

5. Plug the Cat-5 network cable back into the network wall jack with Power over Ethernet (PoE). Then replace the cordless handset on the telephone base cradle.

Handset battery installation

To install or replace the handset battery, follow the steps below.

1. Use a narrow object to pry open the screw cover and remove the screw with cross head screwdriver. Then, insert a 5 mm standard flat head screwdriver in the provided slot and gently open the handset cover.

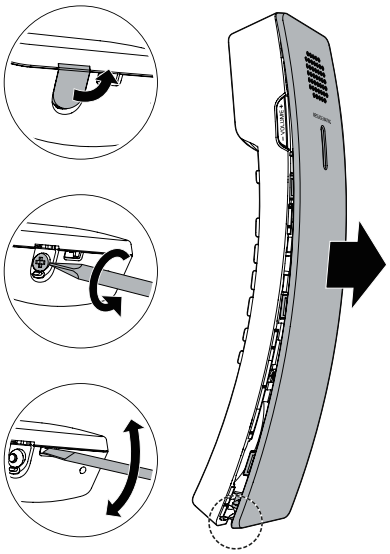

2. Unplug the battery connector from the socket and then remove the battery from the handset battery compartment.
3. Plug the battery connector securely into the socket inside the handset battery compartment. Place the battery with the label **THIS SIDE UP** facing up and the wires inside the battery compartment.

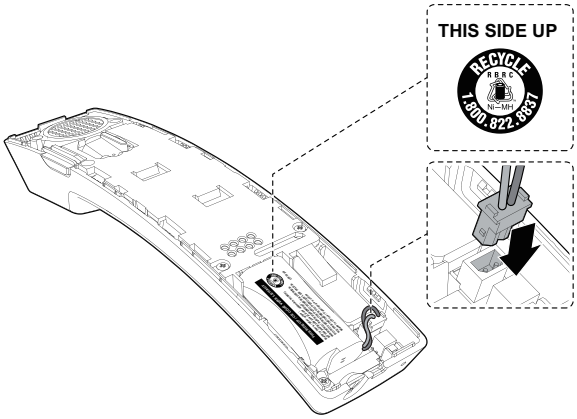

4. To replace the handset cover, align all the tabs on the handset cover against the corresponding grooves on the handset, then firmly push downward until all the tabs lock in the grooves. Then install the screw.
5. Bend a small paperclip and gently insert it to the Handset battery ON pinhole to turn on the handset.

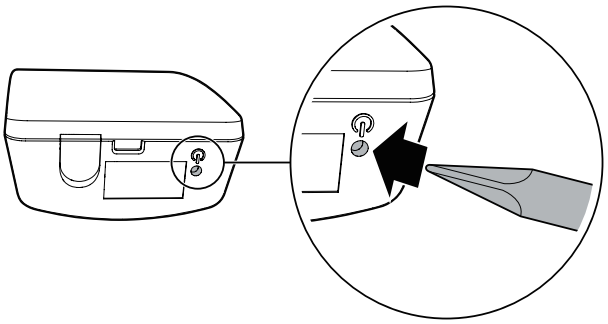

- Without turning on the handset, the handset cannot be charged or operate.
- The battery is fully charged after 16 hours of continuous charging. For best performance, keep the cordless handset in the telephone base when not in use.

ⓘ CAUTIONS

- There may be a risk of explosion if a wrong type of handset battery is used. Use only the supplied rechargeable battery (BT264392/BT266342) or replacement battery (BT266342). To order a replacement, call 1-888-907-2007.
- FCC ID is shown on the back of the cordless handset body after the handset cover is removed.
- Dispose of used batteries according to the information in "The RBRC® seal" on page 29.

Handset battery charging

The battery must be fully charged before using the cordless handset for the first time. The **CHARGE** LED turns on when the cordless handset is charging on the telephone base. The battery is fully charged after 16 hours of continuous charging. For best performance, keep the cordless handset in the telephone base or charging stand when not in use.

Handset registration

Place the cordless handset on the telephone base cradle. Handset registration happens automatically the first time a cordless handset is placed on the telephone base.

When the handset is successfully registered, a confirmation tone will be heard.

Each telephone base accommodates up to five cordless handsets. When you already have five registered handsets, you can replace one of them by a new handset if any one of the five registered handsets is disconnected from the base. For example, it is out of range, or its battery is removed or depleted. The previous registered handset is then deregistered from the telephone base.

Register a handset to another telephone base

Any CTM-C4402 handset can register to any CTM-S2412 telephone base.

When a registered cordless handset is idle, place it on another telephone base. This cordless handset automatically registers to the new telephone base.

Installation

Cordless charging stand - C4012

Install charging stand for desktop

The charging stand is designed for desktop use. Install the charging stand as shown below.

- Make sure the power adapter is securely plugged into an outlet not controlled by a wall switch.

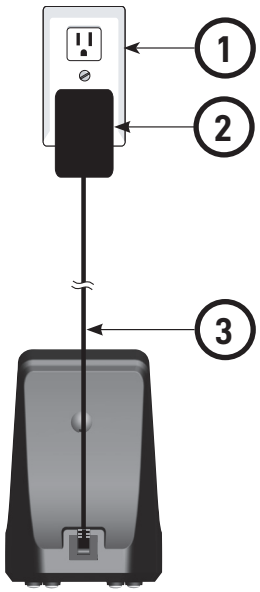

1	Electrical outlet not controlled by a wall switch
2	Power adapter
3	Power cord

ⓘ CAUTIONS

Use only the supplied power adapter. The supplied power adapter is not designed for use in any other IT devices. Misusing it on your other IT devices shall be prohibited. To order a replacement, call 1-888-907-2007.

Set up

SIP Contemporary Cordless 1-line - CTM-S2412

SIP Contemporary Cordless 1-line Accessory Handset - CTM-C4402

Default settings are indicated by asterisks (*).

Setting	Options	Adjustable by
Listening volume- Handset	1, 2, 3, 4*, 5, 6	User and administrator
Speakerphone volume - Handset	1, 2, 3, 4*, 5, 6	User and administrator
Speakerphone volume - telephone base	1, 2, 3, 4, 5*, 6, 7, 8, 9	User and administrator
Ringer volume - telephone base	1, 2, 3, 4, 5*, 6, 7, 8, 9	User and administrator
Ringer tone	Tone 1*, Tone 2, Tone 3	Administrator only

All telephone settings are programmed through the administrative web portal. Please refer to the SIP Phone Configuration Guide for details.

Voice Menu

The Voice menu enables you to use the handset to query and change phone settings.

To access the Voice Menu:

1. When the phone is idle, press this key sequence on the handset: **TALK** * * * *. A digitized voice on the handset will announce Voice Menu options.
2. Press the number key on the handset to select the desired menu option, or enter information. A list of menu options is shown in the diagram below.

   For example, to find out the IP address of the phone, press **1** for Network Configuration, then press **2** for IP Address.
3. When you are finished with the Voice menu, press **OFF** on the handset or place it in the cradle.

   NOTE: if you changed any network settings, your phone will automatically reboot. This will enable your new settings to take effect.

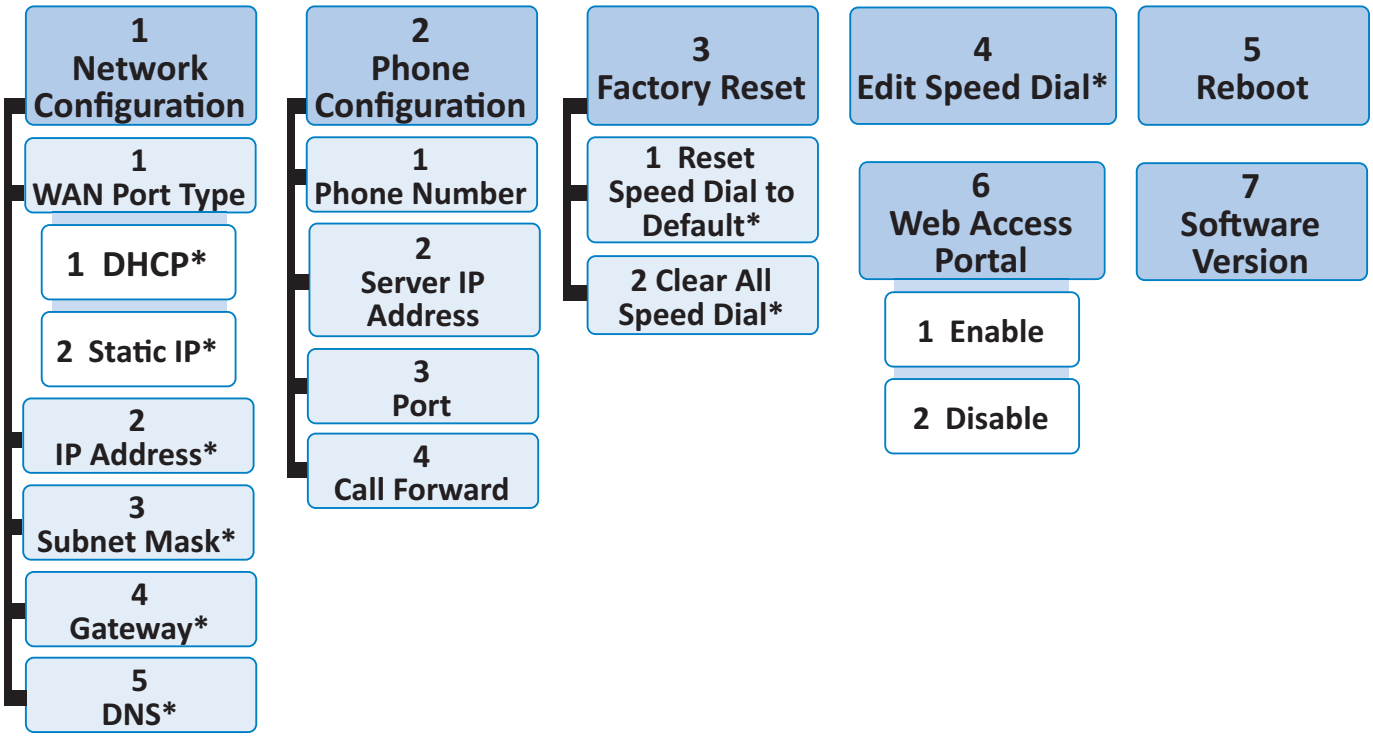

*** requires password (default 1234)**

Operation

SIP Contemporary Cordless 1-line - CTM-S2412

SIP Contemporary Cordless 1-line Accessory Handset - CTM-C4402

Using the cordless handset and the telephone base

The cordless handset and the telephone base speakerphone cannot be used at the same time on a call. However, calls can be switched between the cordless handset and the telephone base speakerphone.

When the cordless handset or the telephone base is in use, the **TALK** key on the cordless handset and the **LINE** key on the telephone base illuminate.

Receive a call

When there is an incoming call, the telephone rings. The **LINE** key, 🔊 key and the **MESSAGE WAITING** LED on the telephone base flash, and the **TALK** key on the cordless handset flashes.

Answer a call using the cordless handset while it is not on the telephone base or charging stand

On the cordless handset, press **TALK** key or 🔊.

- The **TALK** key illuminates when in use. The 🔊 key illuminates when in speakerphone mode.

Answer a call using the cordless handset while it is cradled on the telephone base or charging stand

Lift the cordless handset from the telephone base or charging stand.

- The **TALK** key illuminates when in use. The 🔊 key illuminates when in speakerphone mode.

Answer a call using the telephone base

On the telephone base, press **LINE** key or 🔊.

- The **LINE** key illuminates when in use. The 🔊 key illuminates when in speakerphone mode.

Place a call

Place a call using the cordless handset

On the cordless handset, press **TALK** key or 🔊 . Listen for a dial tone and then dial the desired number, or press a Speed Dial key on the cordless handset to dial a programmed number.

- The **TALK** key illuminates when in use. The 🔊 key illuminates when in speakerphone mode.

Place a call using the telephone base

On the telephone base, press **LINE** key or 🔊. Listen for a dial tone and then dial the desired number, or press a Speed Dial key on the telephone base to dial a programmed number.

- The **LINE** key illuminates when in use. The 🔊 key illuminates when in speakerphone mode.

End a call

End a call when using the cordless handset

Press **OFF** on the cordless handset or place it in the telephone base or charging stand. The call ends when all handsets hang up.

End a call when using the telephone base

Press **LINE** key or 🔊.

Switch a call between the cordless handset and the telephone base speakerphone

- To switch a call from the cordless handset to the telephone base speakerphone, press 🔊 on the telephone base.

English

- To switch a call from the telephone base speakerphone to the cordless handset which is not on the telephone base cradle, press **TALK** or 🔊 on the cordless handset.
- To switch a call from the telephone base speakerphone to the cordless handset which is cradled on the telephone base, lift the cordless handset from the telephone base and press **TALK** or 🔊.

Join a call

During a call, press **TALK** or 🔊 on another cordless handset to join.

Handset speakerphone

During a call, press 🔊 on the cordless handset to switch between speakerphone mode and handset earpiece mode. The 🔊 key illuminates when in speakerphone mode.

Redial

The last dialed number on the telephone base is stored for 15 minutes.

Redial the last dialed number from the telephone base

Press **LINE** or 🔊 to listen for a dial tone. Then press **REDIAL**.

Volume

Listening volume can be adjusted on the cordless handset and the telephone base.

Adjust the listening volume

- During a call on the handset, press **– VOLUME +** to adjust the listening volume. The next call returns to the default listening volume.
- During a call on the telephone base, press **VOLUME** + or **–** to adjust the listening volume. The next call returns to the default listening volume.

Adjust the ringer volume of the telephone base

Ringer volume of the telephone base can be adjusted.

When the telephone base is idle, press **VOLUME** + or **–** to adjust the ringer volume.

Call waiting

Call waiting when using the cordless handset

1. When you hear a call waiting tone during a call, press **TALK/FLASH** key on the cordless handset to put the current call on hold and take the new incoming call.
2. To switch back and forth between calls, press **TALK/FLASH** key.
3. To end the active call, press **OFF**, and then press **TALK/FLASH** to resume the other call.

Call waiting when using the telephone base

1. When you hear a call waiting tone during a call, press **FLASH** key on the telephone base to put the current call on hold and take the new incoming call.
2. To switch back and forth between calls, press **FLASH** key.
3. To end the active call, press **LINE** key or 🔊 , and then press **LINE** key or 🔊 again to resume the other call.

Mute

Mute the microphone

1. During a call, press **MUTE** / 🎤 .
   - The **MUTE** / 🎤 key on the handset / telephone base illuminates when the mute function is turned on. You can hear the party on the other end, but they cannot hear you.
2. Press **MUTE** / 🎤 again to resume the conversation.
   - The light on the 🎤 key turns off.

Message waiting Indicator

When a voice message is received, the message waiting LEDs on the telephone base and the cordless handset flashes.

Play messages

Press **MESSAGES** on the cordless handset in idle mode to play messages.

Hold

To place a call on hold:

1. During a call, press the **HOLD** key on the telephone base or the cordless handset.
   - The **TALK** key on the cordless handset and the **LINE** key on the telephone base flash when the call is on hold.

To take the call off hold:

1. Press **TALK** or 🔊 on the handset, OR press **LINE** or 🔊 on the telephone base or the call will end automatically after the preset call on hold duration.
   - The **TALK** key illuminates when in use. The 🔊 key illuminates when in speakerphone mode.

Find handset

Use this feature to find all registered cordless handsets.

To start paging:

Press **/FIND HANDSET** on the telephone base when the phone is not in use. All idle cordless handsets ring for 60 seconds.

To end paging:

- Press **/FIND HANDSET** again on the telephone base.

-OR-

- Press **MUTE** or **OFF** on the cordless handset to stop the ringing.

Computer port

You can route your computer through the COMPUTER port (RJ-45) on the side of the telephone base to get Internet access.

USB port

The port on the side of the telephone base can be used for charging devices (up to 500mA @ 5V). Charging will be suspended when there is an incoming call or the telephone is in use.

Appendix

Troubleshooting

If you have difficulty with the telephone, please try the suggestions below. For customer service, call 1-888-907-2007.

For cordless telephone

Question	Suggestions
The telephone does not work at all.	• Make sure the Cat-5 network cable is plugged into the **LAN** port of the telephone base and the network wall jack with Power over Ethernet (PoE). • Make sure the battery is installed and charged correctly. For optimum daily performance, return the cordless handset to the telephone base or charging stand after use. • Unplug the Cat-5 network cable from the network wall jack. Wait for approximately 15 seconds, then plug it back in. • Charge the battery in the cordless handset for up to 16 hours. • If the battery is completely depleted, charge the battery for at least 30 minutes before use. • Remove the battery and then install it again. If that still does not work, it may be necessary to purchase a new battery. • Disconnect the telephone base from the network wall jack and connect a different working SIP telephone. If the other SIP telephone does not work, the problem is probably in the wiring or network server. Check your SIP server settings. Refer to the **SIP Phone Configuration Guide** for details. • Make sure the energy-saving charging mode is not activated. If this mode is activated, all telephone functions will be disabled, except battery charging.

Question	Suggestions
There is no dial tone.	• Try all the above suggestions. • The Cat-5 network cable may be defective. Install a new Cat-5 network cable. • Make sure your network is providing Power over Ethernet (PoE). • Disconnect the telephone base from the network wall jack and connect a different working SIP telephone. If there is no dial tone on this telephone either, the problem is in your wiring or network server. Check your SIP server settings and refer to the **SIP Phone Configuration Guide** for details. • Make sure the initialization and system registration process completes. The speakerphone key blinks twice every second if there are errors with the initialization and system registration process. Check your SIP server settings. Refer to the **SIP Phone Configuration Guide** for details. • Make sure the energy-saving charging mode is not activated. If this mode is activated, all telephone functions will be disabled, except battery charging.
I cannot dial out.	• Try all the above suggestions. • Make sure there is a dial tone before dialing. It is normal if the cordless handset takes a second or two to synchronize with the telephone base before producing a dial tone. Wait an extra second before dialing. • A prefix may be required for dialing some internal or external calls. Refer to the **SIP Phone Configuration Guide** for details. • Check your SIP server settings. If other SIP telephones in your hotel are having the same problem, the problem is in the wiring or network server. Contact your telephone service provider (charges may apply).

Question	Suggestions
The Speed Dial key does not work at all.	• The Speed Dial key may not be properly programmed. Refer to the **SIP Phone Configuration Guide** for details.
The telephone cannot register to the SIP network server.	• Make sure your network is providing Power over Ethernet (PoE). • Make sure the initialization and system registration process completes. • If there is an error during the initialization and system registration process, the 🔊 key flashes twice every second. Disconnect the Cat-5 network cable from the network wall jack and connect it back into the network wall jack with Power over Ethernet (PoE) to start the initialization and system registration process again.
The **LOW BATTERY** LED illuminates on the cordless handset.	• Place the cordless handset in the telephone base or charging stand for recharging. • Remove the battery and then install it again, and use it until fully depleted. Then charge the cordless handset in the telephone base or charging stand for up to 16 hours. • If the above measures do not correct the problem, replace the battery.
The battery does not charge in the cordless handset or the battery does not accept charge.	• Make sure the cordless handset is placed in the telephone base or charging stand correctly. The **CHARGE** LED should be on. • Remove the battery and then install it again. Charge it for up to 16 hours. • If the cordless handset is placed in the telephone base or charging stand but the **CHARGE** LED is not on, refer to **The CHARGE LED is off** below. • If the battery is completely depleted, charge the cordless handset for at least 30 minutes before use. • If the above measures do not correct the problem, replace the battery.

Question	Suggestions
The **CHARGE** LED is off	• Clean the charging contacts on the cordless handset, telephone base, and/or charging stand each month with a pencil eraser or a dry non-abrasive fabric. • Make sure the Cat-5 network cable is plugged in correctly and securely. • Unplug the Cat-5 network cable. Wait for 15 seconds before plugging it back in.
The telephone does not ring when there is an incoming call.	• Make sure the Cat-5 network cable is plugged into the **LAN** port of the telephone base and the network wall jack with Power over Ethernet (PoE). • The cordless handset may be too far from the telephone base. Move it closer to the telephone base. • Check your SIP server or telephone administrative settings. Refer to the **SIP Phone Configuration Guide** for details. • If other SIP telephones in your hotel are having the same problem, the problem is in the wiring or network server. Contact your telephone service provider (charges may apply). • Other electronic products such as HAM radios and other DECT phones can cause interference with your cordless phone. Try installing your phone as far away as possible from these types of electronic devices. • The Cat-5 network cable may be defective. Install a new Cat-5 network cable. • Remove the battery and then install it again. Then place the cordless handset in the telephone base. Wait for the handset to synchronize with the telephone base. Allow up to one minute for this to take place.

Question	Suggestions
The cordless handset beeps and is not performing normally.	• Make sure the Cat-5 network cable is plugged into the **LAN** port of the telephone base and the network wall jack with Power over Ethernet (PoE). • Check your SIP server or telephone administrative settings. Refer to the **SIP Phone Configuration Guide** for details. • Disconnect the telephone base from the network wall jack and connect a different working SIP telephone. If the other SIP telephone has the same problem, the problem is in the wiring or network server. Contact your telephone service provider (charges may apply). • Other electronic products such as HAM radios and other DECT phones can cause interference with your cordless phone. Try installing your phone as far away as possible from these types of electronic devices.
There is interference during a telephone conversation, or the call fades in and out when I am using the cordless handset.	• The cordless handset may be out of range. Move the handset closer to the telephone base or adjust the setting of RF transmission power. Refer **SIP Phone Configuration Guide** for details. • Other electronic products such as HAM radios and other DECT phones can cause interference with your cordless phone. Try installing your phone as far away as possible from these types of electronic devices. • If other SIP telephones in your hotel are having the same problem, the problem is in the wiring or network server. Contact your telephone service provider (charges may apply).

Question	Suggestions
I hear other calls when using the telephone.	• Disconnect the telephone base from the network wall jack and connect a different working SIP telephone. Check your SIP server settings. If calls are still not clear, the problem is probably in the wiring or network server. Contact your telephone service provider (charges may apply).
I hear noise on the cordless handset and the keys do not work.	• Make sure the Cat-5 network cable is plugged in correctly and securely. • Unplug the Cat-5 network cable. Wait for 15 seconds before plugging it back in.
Common cure for electronic equipment.	• If the telephone is not responding normally, put the cordless handset in the telephone base. If it does not fix the problem, try the following (in the order listed): 1. Disconnect the power to the telephone base. 2. Disconnect the battery on the cordless handset. 3. Wait a few minutes before connecting power to the telephone base. 4. Install the battery again and then place the cordless handset in the telephone base. 5. Wait for the cordless handset to synchronize with the telephone base. Allow up to one minute for this to take place.

VTech Hospitality Limited Warranty Program

VTech Communications, Inc., the manufacturer of VTech Hospitality Product ("Product"), warrants to the holder of a valid proof of purchase ("end user" or "you") that the Product and all accessories provided by VTech in the Product's package are free from defects in material and workmanship, pursuant to the following terms and conditions, when installed and used normally and in accordance with the Product's operating instructions. The limited warranty extends to the end user of this Product and applies only if such Product is purchased through a United States of America and/or Canadian distributor. The limited warranty period for this Product is determined based on the following:

5 Years – Analog Models

- All Classic Models – corded and cordless
- All Contemporary Models – corded and cordless
- All TrimStyle Models
- All Next Gen Models - corded and cordless

2 Years – SIP Non-Display Models

- All Classic Models – corded and cordless
- All Contemporary Models – corded and cordless
- All TrimStyle Models
- All Next Gen Models - corded and cordless

During the limited warranty period, VTech's authorized service representative will repair or replace, at VTech's option, without charge, a Product that is not free from defects in materials and workmanship. If VTech's authorized service representative repairs the Product, new or refurbished replacement parts may be used. If the Product is replaced, it may be replaced with a new or refurbished Product of the same or similar design. Repair or replacement of Product, at VTech's option, is the exclusive remedy.

The limited warranty period for the Product begins on the date that the end user takes possession of the Product. This limited warranty also applies to repaired or replacement Products for a period of either: (a) 90 days from the date the repaired or replacement Product is shipped to you; or (b) the time remaining on the original limited warranty as described above; whichever is longer.

This limited warranty does not cover:

1. Product or parts that have been subjected to misuse, accident, shipping or other physical damage, improper installation, abnormal operation or handling, neglect, inundation, fire, water or other liquid intrusion; or
2. Product that has been damaged due to repair, alteration or modification by anyone other than an authorized service representative of VTech; or
3. Product to the extent that the problem experienced is caused by signal conditions, network reliability or cable or antenna systems; or
4. Product to the extent that the problem is caused by use with non-VTech accessories; or
5. Product whose warranty/quality stickers, product serial number plates or electronic serial

numbers have been removed, altered or rendered illegible; or

6. Product purchased, used, serviced, or shipped for repair from outside the United States or Canada, or used for non-approved commercial or institutional purposes (including but not limited to Products used for rental purposes); or
7. Product returned without valid proof of purchase; or
8. Charges or costs incurred by the end user, and risk of loss or damage, in removing and shipping the Product, or for installation or set up, adjustment of customer controls, and installation or repair of systems outside the unit.
9. Line cords or coil cords, plastic overlays, connectors, power adapters and batteries, if the Product is returned without them. VTech will charge the end user at then-current prices for each of the missing items.
10. NiCd, NiMH or Li-ion handset batteries, or power adapters, which, under all circumstances, are covered by a one (1) year warranty only.

Except as provided by applicable law, you assume the risk of loss or damage during transit and transportation and are responsible for delivery or handling charges incurred in the transport of Product(s) to the service location. VTech's authorized service representative will return repaired or replaced product under this limited warranty to you, transportation, delivery and handling charges prepaid. VTech assumes no risk for damage or loss of the Product in transit.

If the Product failure is not covered by this limited warranty, or proof of purchase does not meet the terms of this limited warranty, VTech will notify you and will request that you authorize the cost of repair and return shipping costs for the repair of Products that not covered by this limited warranty. You must pay for the cost of repair and return shipping costs for the repair of Products that are not covered by this limited warranty.

Other limitations

This warranty is the complete and exclusive agreement between you and VTech. It supersedes all other written or oral communications related to this Product. VTech provides no other warranties for this Product, whether express or implied, oral or written, or statutory. The warranty exclusively describes all of VTech's responsibilities regarding the Product. No one is authorized to make modifications to this warranty and you should not rely on any such modification.

VTech's liability to end user hereunder shall not exceed the purchase price of the Product. In no event shall VTech be liable for any indirect, special, incidental, consequential, or similar damages (including, but not limited to lost profits or revenue, inability to use the product, or other associated equipment, the cost of substitute equipment, and claims by third parties) resulting from the use of this Product. Some states/provinces do not allow the exclusion or limitation of incidental or consequential damages, so the above limitation or exclusion may not apply to you.

This warranty gives you specific legal rights, and you also have other rights which vary from state to state or province to province.

Precautions for users of implanted cardiac pacemakers

Cardiac pacemakers (applies only to digital cordless telephones):

Wireless Technology Research, LLC (WTR), an independent research entity, led a multidisciplinary evaluation of the interference between portable wireless telephones and implanted cardiac pacemakers. Supported by the U.S. Food and Drug Administration, WTR recommends to physicians that:

Pacemaker patients

- Should keep wireless telephones at least six inches from the pacemaker.
- Should NOT place wireless telephones directly over the pacemaker, such as in a breast pocket, when it is turned ON.
- Should use the wireless telephone at the ear opposite the pacemaker.

WTR's evaluation did not identify any risk to bystanders with pacemakers from other persons using wireless telephones.

Operating range

The cordless telephone operates with the maximum power allowed by the Federal Communications Commission (FCC). Even so, the cordless handset and telephone base can communicate over only a certain distance - which can vary with the locations of the telephone base, cordless handset, the weather, and the layout of the hotel.

When the cordless handset is out of range while on a call, the cordless handset rapidly beeps three times.

If there is a call while the handset is out of range, it may not ring, or if it does ring, the call may not connect well when you answer the call. Move closer to the telephone base to answer the call.

If the handset moves out of range during a telephone conversation, there may be interference.

To improve reception, move closer to the telephone base.

About cordless telephones

Privacy: The same features that make a cordless telephone convenient create some limitations. Telephone calls are transmitted between the telephone base and the cordless handset by radio waves, so there is a possibility that the cordless telephone conversations could be intercepted by radio receiving equipment within range of the cordless handset. For this reason, you should not think of cordless telephone conversations as being as private as those on corded telephones.

Electrical power: The telephone base of the cordless telephone must be connected to a working electrical outlet. The electrical outlet should not be controlled by a wall switch. Calls cannot be made from the cordless handset if the telephone base is unplugged, switched off or if the electrical power is interrupted.

Potential TV interference: Some cordless telephones operate at frequencies that may cause interference to televisions and VCRs. To minimize or prevent such interference, do not place the telephone base of the cordless telephone near or on top of a TV or VCR. If interference is experienced, moving the cordless telephone farther away from the TV or VCR often reduces or eliminates the interference.

Rechargeable batteries: Exercise care in handling batteries in order not to create a short circuit with conducting material such as rings, bracelets and keys. The battery or conductor may overheat and cause harm. Observe proper polarity between the battery and the battery charger.

Nickel-metal hydride rechargeable batteries: Dispose of these batteries in a safe manner. Do not burn or puncture the battery. Like other batteries of this type, if burned or punctured, they could release caustic material which could cause injury.

The RBRC® seal

The RBRC® seal on the nickel-metal hydride battery indicates that VTech Communications, Inc. is voluntarily participating in an industry program to collect and recycle these batteries at the end of their useful lives, when taken out of service within the United States and Canada.

The RBRC® program provides a convenient alternative to placing used nickel-metal hydride batteries into the trash or municipal waste, which may be illegal in your area.

VTech's participation in RBRC® makes it easy for you to drop off the spent battery at local retailers participating in the RBRC® program or at authorized VTech product service centers. Please call **1 (800) 8 BATTERY™** for information on Ni-MH battery recycling and disposal bans/ restrictions in your area. VTech's involvement in this program is part of its commitment to protecting our environment and conserving natural resources.

RBRC® is a registered trademark of Rechargeable Battery Recycling Corporation.

FCC, ACTA and IC regulations

FCC Part 15

This equipment has been tested and found to comply with the limits for a Class A digital device, pursuant to part 15 of the FCC Rules. These limits are designed to provide reasonable protection against harmful interference when the equipment is operated in a commercial environment. This equipment generates, uses, and can radiate radio frequency energy and, if not installed and used in accordance with the instruction manual, may cause harmful interference to radio communications. Operation of this equipment in a residential area is likely to cause harmful interference in which case the user will be required to correct the interference at his own expense.

Changes or modifications to this equipment not expressly approved by the party responsible for compliance could void the user's authority to operate the equipment.

This device complies with Part 15 of the FCC rules. Operation is subject to the following two conditions: (1) this device may not cause harmful interference, and (2) this device must accept any interference received, including interference that may cause undesired operation.

This Class A digital apparatus complies with Canadian requirements: CAN ICES-3 (A) / NMB-3(A).

FCC Part 68 and ACTA

This equipment complies with Part 68 of the FCC rules and with technical requirements adopted by the Administrative Council for Terminal Attachments (ACTA). The label on the back or bottom of this equipment contains, among other things, a product identifier in the format US: AAAKXNANXXXX. This identifier must be provided to your telephone service provider upon request.

The plug and jack used to connect this equipment to premises wiring and the telephone network must comply with applicable Part 68 rules and technical requirements adopted by ACTA. A compliant telephone cord and modular plug is provided with this product. It is designed to be connected to a compatible modular jack that is also compliant. An RJ45 jack should normally be used for connecting to a single line. See the installation instructions in the user's manual.

The Ringer Equivalence Number (REN) is used to determine how many devices you may connect to your telephone line and still have them ring when you are called. The REN for this product is encoded as the 6th and 7th characters following the US: in the product identifier (e.g., if ## is 03, the REN is 0.3). In most, but not all areas, the sum of all RENs should be five (5.0) or less. For more information, please contact your telephone service provider.

This equipment may not be used with Party Lines. If you have specially wired alarm dialing equipment connected to your telephone line, ensure the connection of this equipment does not disable your alarm equipment. If you have questions about what will disable alarm equipment, consult your telephone service provider or a qualified installer.

If this equipment is malfunctioning, it must be unplugged from the modular jack until the problem has been corrected. Repairs to this telephone equipment can only be made by the manufacturer or its authorized agents. For repair procedures, follow the instructions outlined under **VTech Hospitality limited warranty program** in the user's manual.

To ensure safety of users, the FCC/ISEDC has established criteria for the amount of radio frequency energy of the product. This product has been tested and found to comply with the FCC/ISEDC criteria. The handset may be safely held against the ear of the user. The telephone base shall be installed and used such that parts of the user's body other than the hands are maintained at a distance of approximately 20 cm (8 inches) or more.

Pour assurer la sécurité des utilisateurs, la FCC/ISEDC a établi des critères pour la quantité d'énergie radiofréquence qui peut être absorbée en toute sécurité par un utilisateur ou un spectateur en fonction de l'utilisation prévue du produit. Ce produit a été testé et déclaré conforme aux critères FCC/ISEDC. Le combiné peut être maintenu en toute sécurité contre l'oreille de l'utilisateur. Le socle du téléphone doit être installé et utilisé de façon à ce que les parties du corps de l'utilisateur autres que les mains soient maintenues à une distance d'environ 20 cm (8 pouces) ou plus.

If this equipment is causing harm to the telephone network, your telephone service provider may temporarily discontinue your telephone service. Your telephone service provider is required to notify you before interrupting service. If advance notice is not practical, you will be notified as soon as possible. You will be given the opportunity to correct the problem and your telephone service provider is required to inform you of your right to file a complaint with the FCC. Your telephone service provider may make changes in its facilities, equipment, operation, or procedures that could affect the proper functioning of this product. Your telephone service provider is required to notify you if such changes are planned.

If this product is equipped with a corded or cordless handset, it is hearing aid compatible.

If this product has memory dialing locations, you may choose to store emergency telephone numbers (e.g., police, fire, medical) in these

locations. If you do store or test emergency numbers, please:

Remain on the line and briefly explain the reason for the call before hanging up.

Perform such activities in off-peak hours, such as early morning or late evening.

When the adjunct is used with a leased system, permission of the owner of the equipment must be obtained for connection of the adjunct because modification of the host system is often required.

This product can only be connected to the host equipment and never directly to the network.

Industry Canada

This product meets the applicable Innovation, Science and Economic Development Canada technical specifications.

The Ringer Equivalence Number (REN) is an indication of the maximum number of devices allowed to be connected to a telephone interface. The termination of an interface may consist of any combination of devices subject only to the requirement that the sum of the RENs of all the devices not exceed five.

Le présent matériel est conforme aux specifications techniques applicables d'Innovation, Sciences et Développement économique Canada.

L'indice d'équivalence de la sonnerie (IES) sert àindiquer le nombre maximal de terminaux qui peuvent être raccordés àune interface téléphonique. La terminaison d'une interface peut consister en une combinaison quelconque de dispositifs, àla seule condition que la somme d'indices d'équivalence de la sonnerie de tous les dispositifs n'excède pas cinq.

ISEDC Warning

This device complies with Innovation, Science, and Economic Development Canada licence exempt RSS standard(s). Operation is subject to the following two conditions:

1. This device may not cause interference, and
2. This device must accept any interference, including interference that may cause undesired operation of the device. Privacy of communications may not be ensured when using this telephone.

The device is compliance with RF exposure guidelines, users can obtain Canadian information on RF exposure and compliance.

Avertissement ISEDC

Cet appareil est compatible avec la licence de l'Innovation, la Science et le développement économique du Canada à l'exemption des normes RSS. Le fonctionnement est sujet aux deux (2) conditions suivantes :

(1). Cet appareil peut ne pas causer de l'interférence, et

(2). Cet appareil doit accepter l'interférence, incluant de l'interférence qui peut causer un mauvais fonctionnement de cet appareil.

La confidentialité des communications peut ne pas être garantie lors de l'utilisation de ce téléphone.

L'appareil est compatible avec les directives de l'exposition RF, les utilisateurs peuvent obtenir les renseignements pour le Canada sur l'exposition RF et sa conformité.

Energy-saving charging mode

When this mode is activated, all telephone functions, except handset battery charging, will be disabled.

To activate the energy-saving charging mode in CTM-S2412:

1. Remove the faceplate from the telephone base.
2. On the front of the telephone base, slide the base power switch to the right (off position).

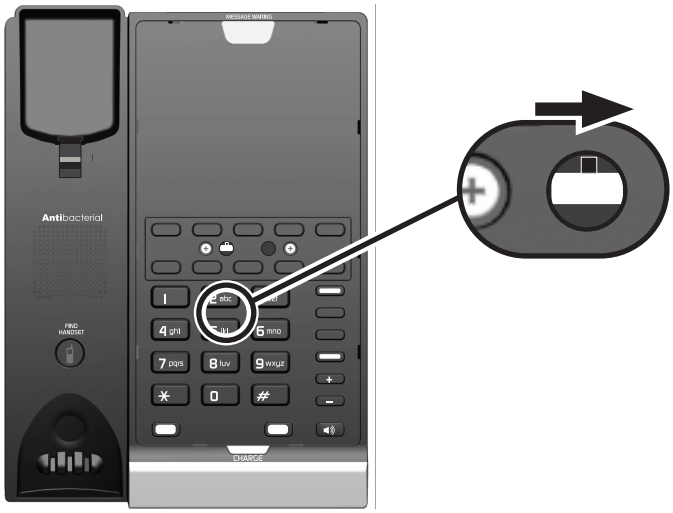

3. Bend a small paperclip and gently insert it to the handset pinhole (handset power tact-switch) to turn off the handset. When the telephone base and handset successfully enters the energy-saving charging mode, all keys on the telephone base should not respond.

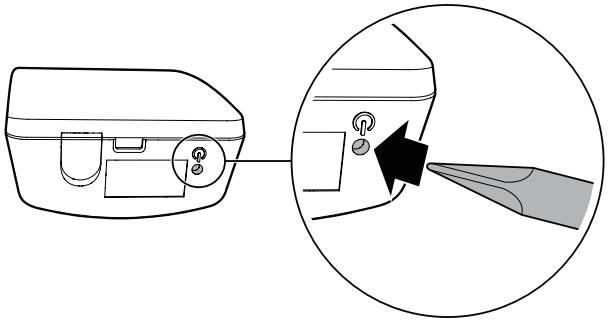

Note

- Make sure the ethernet cable is plugged in.
- Make sure all handsets are plugged with batteries and cradled in charger.

When the phone fails to enter this mode, repeat Step 2 through Step 3 above.

To deactivate the energy-saving charging mode:

1. Slide the base power switch back to the left (on position).
2. Gently insert the end of a paperclip into the handset pinhole (handset power tact-switch) to turn on the handset.
3. Plug the ethernet cable back in to reconnect the power.

Register the handsets back to the telephone base. See page 14 for handset registration instructions.

Maintenance

Taking care of your telephone

Your telephone contains sophisticated electronic parts, so it must be treated with care.

Avoid rough treatment

Place the handset down gently. Save the original packing materials to protect your telephone if you ever need to ship it.

Avoid water

Your telephone can be damaged if it gets wet. Do not use the handset outdoors in the rain, or handle it with wet hands. Do not install the telephone base near a sink, bathtub or shower.

Electrical storms

Electrical storms can sometimes cause power surges harmful to electronic equipment. For your own safety, take caution when using electrical appliances during storms.

Cleaning your telephone

Your telephone has a durable plastic casing that should retain its luster for many years. Clean it only with a soft cloth slightly dampened with water or mild soap. Do not use excess water or cleaning solvents of any kind.

Disclaimer and Limitation of Liability

VTech Communications, Inc. and its suppliers assume no responsibility for any damage or loss resulting from the use of this user's manual. VTech Communications, Inc. and its suppliers assume no responsibility for any loss or claims by third parties that may arise through the use of this product. VTech Communications, Inc. and its suppliers assume no responsibility for any damage or loss caused by deletion of data as a result of malfunction, dead battery, or repairs. Be sure to make backup copies of important data on other media to protect against data loss.

Company: VTech Communications, Inc.

Address: 9020 SW Washington Square Road., Suite 555, Tigard, OR 97223, United States

Phone: 1 (888) 907-2007

Remember that electrical appliances can cause serious injury if used when you are wet or standing in water. If the telephone base should fall into water, DO NOT RETRIEVE IT UNTIL YOU UNPLUG THE POWER CORD AND/OR TELEPHONE LINE CORD FROM THE WALL. Then remove the telephone by the unplugged cords.

Technical specifications

SIP Contemporary Cordless 1-line - CTM-S2412

Frequency control	Crystal controlled PLL synthesizer
Transmit frequency	Handset: 1921.536-1928.448 MHz Telephone base: 1921.536-1928.448 MHz
Channels	5
Nominal effective range	Maximum power allowed by FCC and IC. Actual operating range may vary according to environmental conditions at the time of use.
Power requirement	Telephone base: PoE class 2 powered (48V) Handset: 2.4V 550mAh Ni-MH battery (Model number: BT164392/BT264392)
Message waiting signal	SIP messaging RFC 3261
Speed Dial memory	Telephone base: 11 dedicated speed dial hard keys Handset: 2 dedicated speed dial hard keys, with 2 additional hard keys (✉ **MESSAGES** / ✚ **EMERGENCY**) that can be programmed as speed dial keys.
Size	Telephone base: 8.03 x 6.06 x 3.78 in (204 x 154 x 96 mm) Handset: 8.39 x 1.89 x 1.65 in (213 x 48 x 42 mm)

SIP comtemporary cordless 1-line accessory handset - CTM-C4402

Frequency control	Crystal controlled PLL synthesizer
Transmit frequency	1921.536-1928.448 MHz
Channels	5
Nominal effective range	Maximum power allowed by FCC and IC. Actual operating range may vary according to environmental conditions at the time of use.
Power requirement	2.4V 550mAh Ni-MH battery (Model number: BT164392/BT264392)
Message waiting signal	SIP messaging RFC 3261
Speed Dial memory	Handset: 2 dedicated speed dial hard keys, with 2 additional hard keys (✉ **MESSAGES** / ✚ **EMERGENCY**) that can be programmed as speed dial keys.
Size	8.39 x 1.89 x 1.65 in (213 x 48 x 42 mm)

Cordless charging stand - C4012

Power requirement	Power adapter: 6V DC @400mA
Size	3.78 x 2.80 x 4.29 in (96 x 71 x 109 mm)

Specifications are subject to change without notice.
Copyright © 2022
VTech Communications, Inc.
All rights reserved. 08/22.
CTM-S2412_CTM-S2415HC_CTM-C4402_C4012_UG_V1_CEC_US_2022.08.22