15" DIGITAL COLOR MONITOR

USER'S MANUAL

MODEL No.: 5Q740

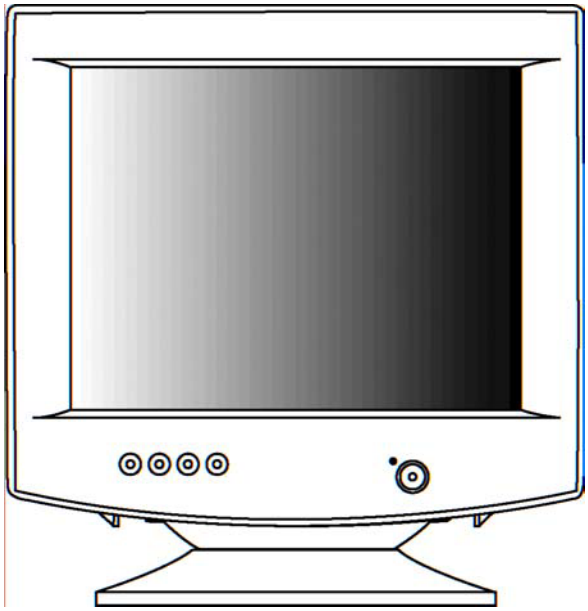

BEFORE USING THIS COLOR MONITOR,
READ AND OBSERVE ALL OF THIS USER'S MANUAL

CONTENTS

SAFETY INSTRUCTION	*2*
CAUTIONS	*4*
FCC RF INTERFERENCE STATEMENT	*5*
INSTALLATION	*6*
RESOLUTION	*7*
CONTROLS AND FUNCTIONS	*8*
REAR VIEW	*13*
SPECIFICATIONS	*14*
TROUBLE SHOOTING GUIDE	*15*

This Monitor was
Manufactured by ISO 9001
Certified Factory

SAFETY INSTRUCTION

1. Read all of these instructions.
2. Save these instructions for later use.
3. Follow all warnings and instructions marked on the product.
4. Unplug this product from the wall outlet before cleaning.
   Do not use liquid cleaners or aerosol cleaners. Use a dry cloth for cleaning.
5. Do not use this product near water.
6. Do not place this product on an unstable cart, stand or table.
   The product may fall, causing serious damage to the product.
7. Slots and openings in the cabinet and the back or bottom are provided for ventilation: to ensure reliable operation of the product and to protect it from overheating these openings must not be blocked by placing the product on a bed, sofa, rug or other similar surface. This product should never be placed near or over a heat register.
   This product should not be placed in a built-in installation unless proper ventilation is provided.
8. This product should be operated from the type of power source indicated on the marking label. If you are not sure of the type of power available consult your dealer or local power company.
9. This product is equipped with a 3 wire grounding type plug having a third(grounding) pin. This is a safety feature. If you are unable to insert the plug into the outlet, contact your electrician to replace your obsolete outlet. Do not defeat the purpose of the grounding-type plug.
10. Do not allow anything to rest on the power cord.
    Do not locate this product where persons will walk on the cord.
11. If an extension cord is used with this product, make sure that the total of the ampere ratings on the products plugged into the extension cord do not exceed the extension cord ampere rating. Also, make sure that the total of all products plugged into the wall outlet does not exceed 10 amperes.
12. Never push objects of any kind into this product through cabinet slots as they may touch dangerous voltage points or short out parts that could result in a risk of fire or electric shock. Never spill any kind of liquid on the product.

SAFETY INSTRUCTION

13. Do not attempt to service this product yourself, as opening or removing covers may expose you to dangerous voltage points or other risks.
    Refer all servicing to service personnel.

14. Unplug this product from the wall outlet and refer servicing to qualified service personnel under the following conditions.
    A. When the power cord or plug is damaged or frayed.
    B. If liquid has been spilled into the product.
    C. If the product has been exposed to rain or water.
    D. If the Product does not operate normally when the operating instructions are followed. Adjust only those controls that are covered by the operating instructions since improper adjustment of other controls may result in damage and will often require extensive work by a qualified technician to restore normal operation.
    E. If the product has been dropped or the cabinet has been damaged.
    F. If the product exhibits a distinct change in performance, indicating a need for service.

▶▶ CAUTION

The power supply cord is used as the main disconnect device, ensure that the socket-outlet is located/installed near the equipment and is easily accessible.

▶▶ ATTENTION

Le cordon d`alimentation est utillsé comme interrupteur général. La prise de courant doit être située ou installée à proximité du matériel et être facile d`accès

CAUTION TO SERVICE PERSONNEL

POWER SUPPLY CORD IS USED AS MAIN POWER DISCONNECT DEVICE IN THIS PRODUCT. UNPLUG THIS PRODUCT FROM THE WALL OUTLET BEFORE REMOVING THE BACK COVER AND SERVICING

EMISSION CHARACTERISTICS TESTED BY SEMKO

THIS PRODUCT HAS BEEN TESTED AND HAS SHOWN COMPLIANCE WITH THE NATIONAL SPECIFICATIONS SUCH AS SWEDISH MPR 1990.10.(MPR •)±

CAUTIONS

▶ NEVER REMOVE THE BACK COVER

Removal of the back cover should be carried out only by qualified personnel.
This display monitor contains high voltage inside.

▶ DO NOT USE IN HOSTILE ENVIRONMENTS

To prevent shock or fire hazard. Do not expose the unit to rain or moisture.
This unit is designed to be used in the office or home. Do not subject the unit to vibrations, dust of corrosive gases.

▶ KEEP IN A WELL VENTILATED PLACE

Ventilation holes are provided on the cabinet to prevent the temperature from rising.
Do not cover the unit or place anything on the top of unit. Ventilation holes are provided also on the bottom of the cabinet.

▶ AVOID HEAT

Avoid placing the unit in direct sunshine or near a heating appliance.

▶ BE CAREFUL OF MAGNETIC FIELDS

Do not place a magnet, speaker system, floppy disc drive or anything which will generate magnetism near the unit, A magnetic field may cause blurred colors or distortion of the displayed pattern.

▶ TO ELIMINATE EYE FATIGUE

Do not use the unit against a bright back ground and where sunlight or other light sources will shine directly on the monitor.

▶ BE CAREFUL OF HEAVY OBJECT

Neither the monitor itself nor any other heavy object should rest on the power cord.
Damage to a power cord can cause fire or electrical shock.

FCC RF INTERFERENCE STATEMENT

▶▶ NOTE :

This equipment has been tested and found to comply with the limits for a Class B digital device, pursuant to Part 15 of the FCC Rules. These limits are designed to provide reasonable protection against harmful interference in a residential installation.

This equipment generates, uses and can radiate radio frequency energy and, if not installed and used in accordance with the instructions, may cause harmful interference to radio communications. However, there is no guarantee that interference will not occur in a particular installation.

If this equipment does cause harmful interference to radio or television reception which can be determined by turning the equipment off and on, the user is encouraged to try to correct the interference by one or more of the following measures.

- Reorient or relocate the receiving antenna.

- Increase the separation between the equipment and receiver.

- Connect the equipment into an outlet on a circuit different from that to which the receiver is connected.

- Consult the dealer or an experienced radio, TV technician for help.

- Only shielded interface cable should be used.

Finally, any changes or modifications to the equipment by the user not expressly approved by the grantee or manufacturer could void the users authority to operate such equipment.

¢ ∫**DOC COMPLIANCE NOTICE**

This digital apparatus does not exceed the Class B limits for radio noise emissions from digital apparatus set out in the radio interference regulation of Canadian Department of Communications.

¢ ∫**AVIS DE CONFORMATION AU MDC(DOC)**

Le présent appareil numérique n´émet pas de bruits radio-électriques dépassant les limites appliqués aux appareils numériques de Class B d´après les règlements sur le brouillage radio-électrique conçuent par le ministère des communications du Canada.

INSTALLATION

**NO TOOLS ARE REQUIRED TO INSTALL THE MONITOR.
SIMPLY FOLLOW THE INSTRUCTIONS OUTLINED IN THE
FOLLOWING PAGE.**

1. INSTALLING THE TILT/SWIVEL STAND

1) Align the stand with the slots in the bottom of the monitor and insert the Tilt/Swivel Stand into the slots.
2) Push the Tilt/Swivel Stand firmly toward the front of the monitor until the latches click into the locked position.

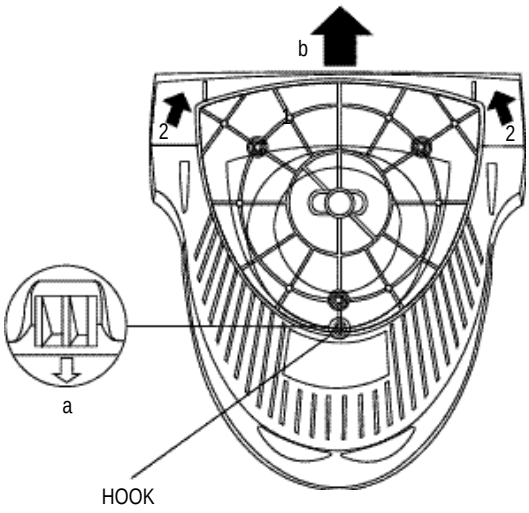

2. CONNECT THE SIGNAL CABLE

1) Connect the end into the graphic card on back of the computer.
2) Secure the connection with the screws on the plug.

3. CONNECT THE POWER CORD

Connect the female end of the power cord to the power input receptacle on the back panel of the monitor.
Then, plug the male end of the power cord to an AC outlet or computer.

4. TURN THIS MONITOR ON AND START YOUR SYSTEM

RESOLUTION

1. RECOMMENDED SIGNAL TIMING CHART

Resolution	Horizontal Frequency(KHz)	Vertical Frequency(Hz)	Clock Frequency(MHz)	Poles (H / V)
IBM(640 * 350)	31.469	70.087	25.175	(+ / -)
IBM(720 * 400)	31.469	70.087	28.322	(- / +)
IBM(640 * 480)	31.469	59.941	25.175	(- / -)
VESA(640 * 480)	43.269	85.008	36.000	(- / -)
VESA(800 * 600)	37.879	60.317	40.000	(+ / +)
VESA(800 * 600)	46.875	75.000	49.500	(+ / +)
VESA(800 * 600)	53.674	85.061	56.256	(+ / +)
VESA(1024 * 768)	48.363	60.004	65.000	(- / -)
VESA(1024 * 768)	68.677	84.997	94.500	(+ / +)
VESA(1280 * 1024)	63.981	60.020	108.000	(+ / +)

It has 10 user setting modes which you can store except for factory setting mode.
Displaying user mode except for factory setting modes, please adjust the monitor screen for yourself.
After that, the screen data is stored to the memory within microprocessor.

2. THE WAY OF ADJUSTMENT

When you want to adjust the screen, please refer to function of controls.
Those screen data are automatically stored to the memory within microprocessor.

CONTROLS AND FUNCTIONS

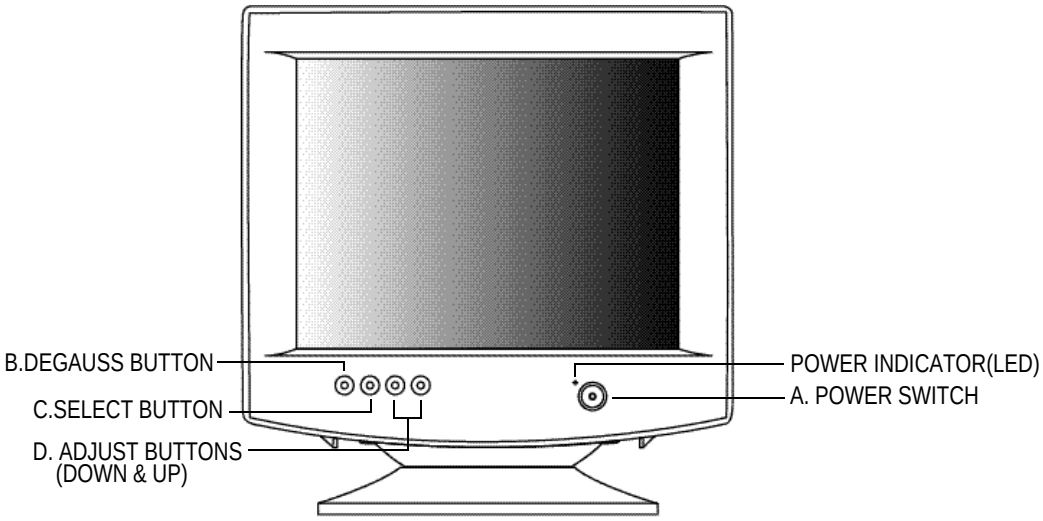

A. POWER SWITCH(⏻)

Turns the power ON or OFF. There will be a few seconds delay before the display appears.

The power LED(next to the power switch) lights when the power is turned ON.

The power is turned off by pressing the power switch again and the power LED goes out.

B. DEGAUSS BUTTON

If the CRT of the monitor becomes magnetized, Picture color is not clean and may be in different light and darkness.

If you push the DEGAUSS botton when OSD menu is not shown, you can get the clean picture and uniformity color.

But, if you push the DEGAUSS button when OSD menu is shown, you make OSD menu disappeared.

In addition, you can use this button to return to the previous menu after adjustment.

NOTE

- The CRT is degaussed automatically each time the monitor is turned on.
- When the button is pushed, the picture will be oscillate for a few seconds.
- Pressing more than once has on effect.
  If you want to demagnetize again, push after at least 30 minutes.

CONTROLS AND FUNCTIONS

C. SELECT BUTTON

If you want to adjust to the monitor, push the SELECT button.
If you push the button, one of the following two OSD menu is displayed for control on screen.

OSD MENU 1

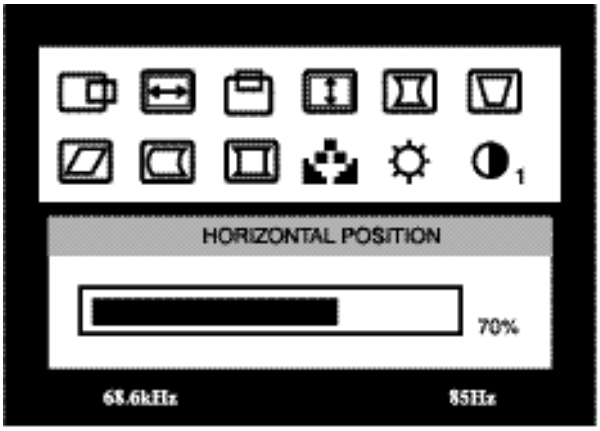

OSD MENU 2

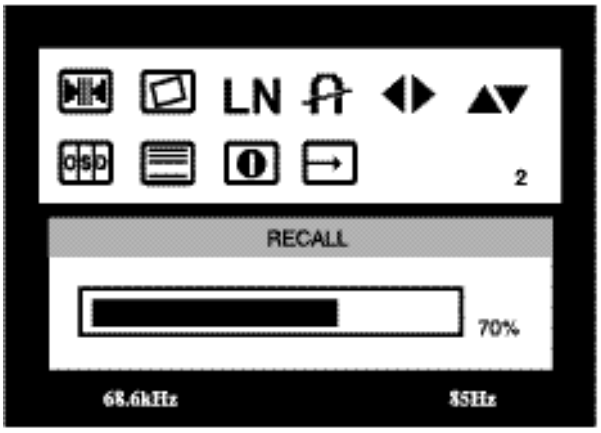

You can use the UP or DOWN button to make selection for each function.
If you push this SELECT button once more, this allows you to activate the desired adjustment with the change of adjustment bar color black to violet.

CONTROLS AND FUNCTIONS

D. ADJUST (u p & down)

The Adjust button allows user to choose the icons (controls) in the menu.
Pressing the adjust button up or down will step through all available adjustment icons (controls).
In addition this adjust button can be used to adjust the icons (controls) that is selected and activated via the select button.
Press the Adjust button.
A window containing an adjustment bar will increase or decrease.
After completing all the desired adjustments, the On Screen Display will disappear with pressing the degauss button.

1. SELF-TEST DISPLAY

When there is no signal input (No connection), the On Screen Display will show.

NO SIGNAL
CHECK SIGNAL CABLE

2. AUTO REGISTRATION

This monitor has 10 preset modes. If the current video is one of the preset modes, the monitor keeps storing the custom display settings into the permanent memory.
There are also 10 user modes that allow you to save the custom display settings made to any video mode that is not one of the preset modes.
Adjustments are automatically registered without pressing any buttons.
Up to 10 user modes are stored automatically on a “First-In-First-Out” basis.

CONTROLS AND FUNCTIONS

3. OSD MENU DESCRIPTION

OSD MENU 1

H POSITION (Horizontal Position)
Moves images horizontally on screen left(up) or right(down)„

H SIZE (Horizontal Size)
Increases(up)„or decreases(down) size of image horizontally Â

V POSITION (Vertical position)
Moves images vertically on screen up or down.

V SIZE (Vertical Size)
Increases(up)„or decreases(down) size of image vertically

PINCUSHION
Adjusts the side Pin-cushion or barrelling.

TRAPEZOID
Adjusts the display sides to be parallel.

PARALLELOGRAM
Adjusts the tilt of the display sides.

PIN BALANCE
Adjusts the curvature of the left and right sides of the screen image.

CORNER CORRECTION
Adjusts the top and bottom corners of the Screen image.

COLOR TEMPERATURE
Adjusts color temperature to 9300K, 6500K(notes : 9300K is factory default). Or, for a custom color mode, select “USER” and push the select button to activate the RGB Sub-menu.
This adjusts the intensity of the RGB video output. Using the select button activate the RG(Red Gain), GG(Green Gain) or BG(Blue Gain) and change color strength for a customized color mode.

BRIGHTNESS
Increases(up)„or decreases(down) the intensity(illumination) of the image.

CONTRAST
Increases(up)„or decreases(down) the strength(lightness or dimness of the image.

CONTROLS AND FUNCTIONS

OSD MENU 2

RECALL
Resets the control functions back to the original factory preset values.
In order for the Recall function to work, the timing must fall under one of the factory preset timing modes.

ROTATION
Adjusts the tilt of image.

LANGUAGE
Selects a language among ENGLISH, DEUTSCH, FRANÇAIS, ESPAÑOL, ITALIANO, JAPANESE.

DEGAUSS
Manually demagnetizes the CDT. This can be used if the display becomes discolored.
Allow a minimum of 5 minutes to elapse between each degauss.
The monitor also will automatically degauss when power is applied.

OSD HORIZONTAL
Moves the OSD position to left or right.

OSD VERTICAL
Moves the OSD position to up or down

OSD ON TIME
Adjusts on screen OSD running time.

MOIRE
Adjusts the moire level of the screen.

INFORMATION
Displays horizontal frequency and vertical frequency and
“PRESET MODE” means the factory preset mode.

EXIT
Exits the OSD menu.

REAR VIEW

E. AC INLET

Power cord connection.

NOTE

Power cord is used as main power disconnect device in this product.

F. D-SUB CONNECTOR OF SIGNAL CABLE

Connect to the analog RGB signal output connector of video card.

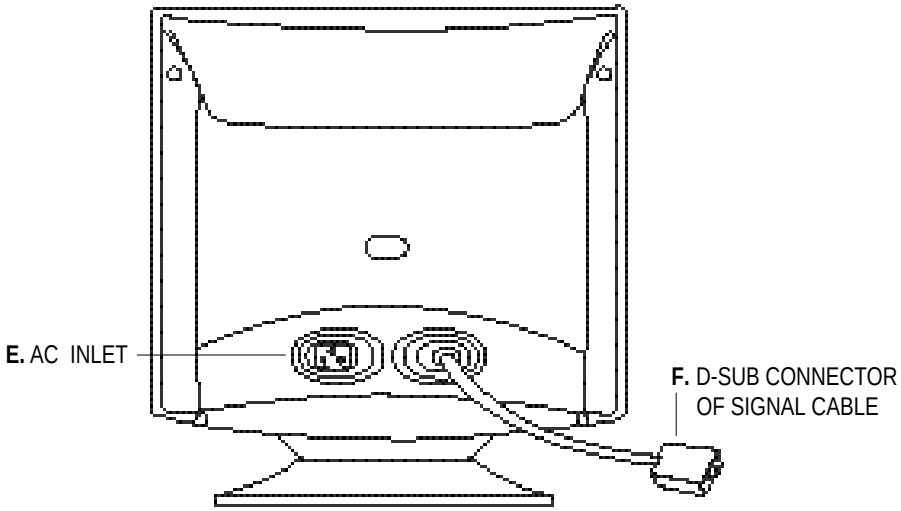

ACCESSORY

1. POWER CORD
2. INSTRUCTION MANUAL

SPECIFICATIONS

- **CDT**

  15inch Dynamic focus
  90 ° Deflection
  0.28mm Dot Pitch

- **RESOLUTION(H x V)**

  1280x1024 Non Interlaced @60Hz

- **FREQUENCY**

  HORIZONTAL : 30-70KHz
  VERTICAL : 50-150Hz

- **INPUT SIGNAL**

  VIDEO: Analog (0.7Vp-p) 75
  SYNC: Horizontal(4.0 Vp-p), Vertical(4.0 Vp-p)

- **ACTIVE DISPLAY AREA (W x H)**

  Preset : 265mm X 195mm
  Full : 282mm X 212mm

- **DIMENSIONS (W x D x H)**

  487mm X 463mm X 447mm (Carton Box)

- **WEIGHT**

  Net Weight : 12.0Kg
  Gross Weight : 14.0Kg

- **POWER SUPPLY**

  AC100 - 240V, 50/60Hz (auto switching)

- **POWER CONSUMPTION**

  75W(Power Saving: Less Than 5W)

- **DDC 1/2B**

- **OSD(On Screen Display)**

Technical specifications are subject to change without notice.

TROUBLE SHOOTING GUIDE

TROUBLE	TROUBLE SHOOTING TIP
No image on display screen	1. Check that power cord of the Monitor have been connected securely into wall outlet or grounded extension cable or strip. 2. Power switch should be in the ON position and LED is lit. 3. Check that the Brightness and/or the Contrast adjustments of the Display have not been turned down to minimum levels.
"No signal, Check signal Cable" message on screen	1. The signal cable should be completely connected to the video card/computer. 2. The video card should be completely seated in its slot and the computer is switched ON.
Display image is not centered, too small or too large	Adjust size and position in the OSD, your settings will be memorized automatically in microprocessor of the monitor.
"Humming" sound when switching on the monitor	The sound you hear indicates that the demagnetizing circuit is activated. Every time the monitor is powered on, it will go through the degaussing process which helps eliminate any purity problems.
Picture bounces or a wave pattern is present in the picture	Remove electric equipments that may be causing electric intereference to the monitor.
There appears to be a second image or "ghost" on the screen	This usually occurs if an extension signal cable is installed or the signal cable is not fastened to the back of the video card.