It is the customer's responsibility to make sure these devices are mounted safely and in compliance with local building codes.

CONNECTIONS

All cabling connections to the booster should be made and checked for correctness prior to powering up the system.

AC Line

Signal Booster II is designed to be hard-wired to 110 single phase AC lines at 50 - 60 Hz (see **Figures 2 and 3**). A junction box is provided for this purpose. There is a hole provided in the cabinet bottom-wall for bringing in the AC line. The entry box contains a standard two-receptacle AC outlet that serves as a junction for the incoming line and also provides a convenient AC outlet for running test equipment. See figure 3 below. Use conduit for running the wiring into SB II and #14 gauge or larger conductors.

Backup DC Power

SB II may be run on a DC power source that can supply 24 to 30 volts DC at 2.5 amps. Screw terminals are provided for this purpose (see figure 2). This line should be equipped with a fast-acting 3 Amp fuse. Use #16 or #18 gauge wire for this connection.

The power system in SB II automatically switches to this backup DC input when the AC supply fails for any reason including a power outage or intentional disconnection.

It is not necessary that this connection be made for normal operation on the AC line.

Alarm Terminals (Form-C contacts)

Two sets of contacts are provided to monitor the general operating condition of SB II and are intended for connection to a supervisory system. See figure 2.

One set changes state when the AC power supply shuts down for any reason and the unit switches to operation on the backup DC power system.

The other set of contacts changes state when any of a number of fault conditions arises within the electronics such as current drain outside of the expected operating range in some module.

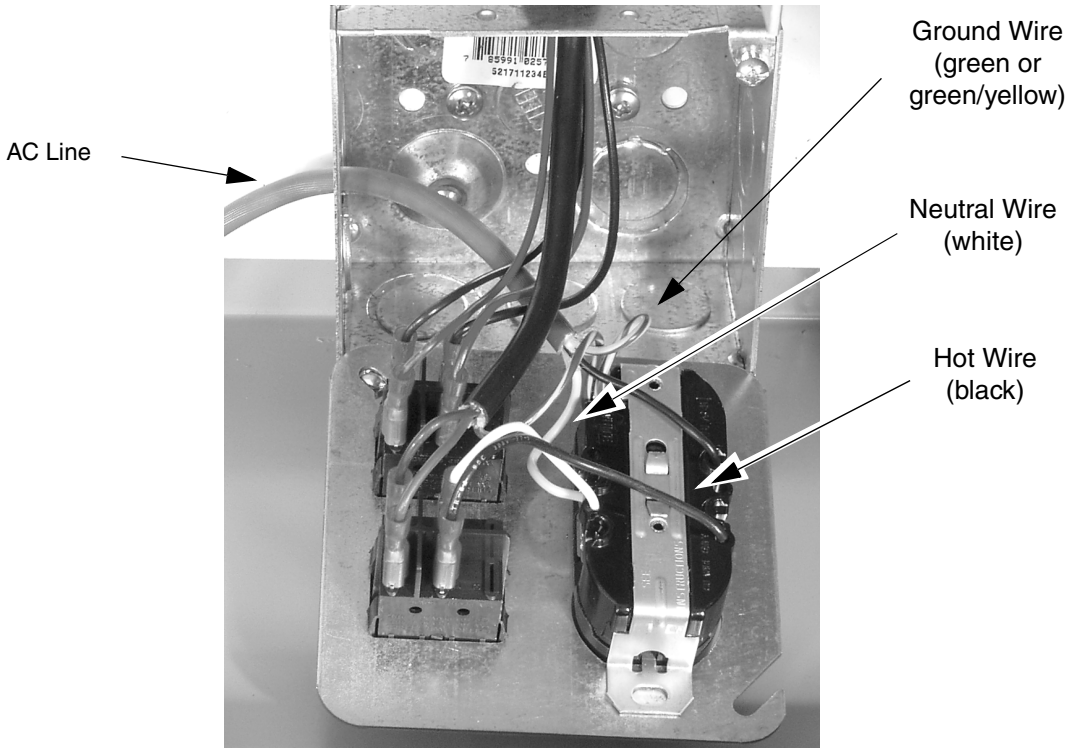

Figure 3: Wiring of AC line entry.

A six-terminal strip is provided for the interface and uses screw terminals for ease of connection. Route the alarm wires through one of the access holes in the bottom of the box, strip about 3/16” of insulation from each end, loosen the screw terminal, insert and retighten. Use #20 or #22 gauge insulated wire.

Use of these terminals is optional. SB II also has a number of status LEDs built-in to individual modules to indicate a fault condition.

RF Connections

N(F) bulkhead connectors are provided on the bottom of the cabinet for connection to the signal distribution system. Be sure that the correct branch of the distribution system is connected to its corresponding Uplink/Downlink connector or the system will not work properly. Using high-quality connectors with gold center pins is advised. Flexible jumper cables made of high-quality coax are also acceptable for connecting to rigid cable sections.

PRE-RF CONNECTION TESTS

Antenna isolation between the uplink and downlink branches should be measured before connecting the signal booster to the antenna system. This step is necessary to insure that no conditions exist that could possibly damage the signal booster and should not be skipped for even the most thoroughly designed system.

NOTE

Note: The 80 dB gain models are factory preset to 50 dB gain and should only be reset to a higher value after determining the safe maximum gain based on antenna isolation

Test Equipment

The following equipment is required in order to perform the pre-installation measurements.

1) Signal generator for the frequencies of interest capable of a 0 dBm output level. Modulation is not necessary.

2) Spectrum analyzer that covers the frequencies of interest and is capable of observing signal levels down to -100 dBm or better.

3) Double shielded coaxial test cables made from RG142, RG55 or RG223 coaxial cable.

Antenna Isolation

Just like the feedback squeal that can occur when the microphone and speaker get too close to each other in a public address system, a signal booster can start to self oscillate. This can occur when the isolation between the input antenna or signal source and the output distribution system does not exceed the signal boosters gain by at least 15 dB. Oscillation will reduce the effectiveness of the system and may possibly damage the power amplifier stages.

In general, if one or both antenna ports are connected to sections of radiating coaxial cable (lossy cable) the isolation will be more than adequate because of the high coupling loss values that are encountered with this type of cable. When a network of antennas are used for the input and output, this problem is much more likely. Isolation values are relatively easy to measure with a spectrum analyzer and signal generator.

Procedure for Measuring Antenna Isolation

1) Set the signal generator for a 0 dBm output level at the center frequency of the signal boosters passbands.

2) Set the spectrum analyzer for the same center frequency and a sweep width equal to or just slightly greater than the passband chosen in step one.

3) Connect the test leads of the signal generator and the spectrum analyzer together using a female barrel connector, see **Figure 4**. Observe the signal on the analyzer and adjust the input attenuator of the spectrum analyzer for a signal level that just reaches the 0 dBm level at the top of the graticule.

4) Referring to figure 4, connect the generator test lead to one side of the signal distribution system (external antenna) and the spectrum analyzer lead to the other (internal distribution system) and observe the signal level. The difference between this observed level and 0 dBm is the isolation between the sections. If the signal is too weak to observe, the spectrum analyzer's bandwidth may have to be narrowed and its input attenuation reduced. Record the isolation value. **The isolation value measured should exceed the signal booster’s gain figure by at least 15 dB.**

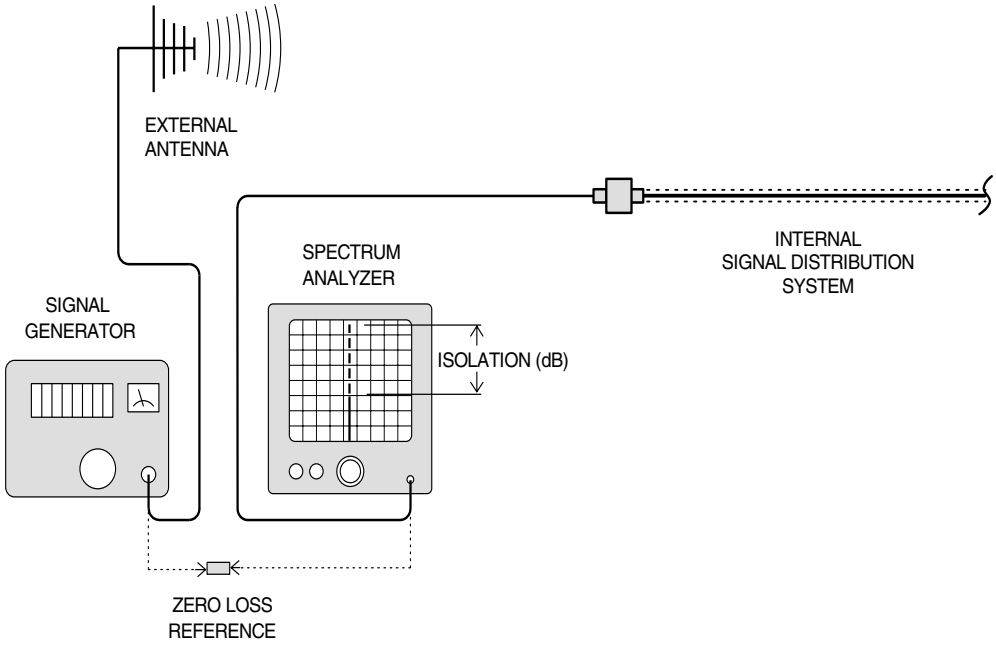

Figure 4: Typical test equipment interconnection for measuring antenna isolation.

It is wise to repeat the procedure listed above for measuring antenna isolation with the signal generator set to frequencies at the passbands edges in order to see if the isolation is remaining relatively constant over the complete width of the passband.

Repeat the isolation measurements at the other passband in bi-directional systems and use the lesser of the two values to determine the maximum gain setting.

Increase Isolation or decrease gain?

Modification of the signal distribution system is required to increase isolation between the up and downlink path. This will require significant changes that may or may not be practical from a cost or logistical standpoint. Gain reduction may be the only alternative but this is easy to achieve with Signal Booster II. Gain for both the uplink and downlink path can be set from 50 to 80 dB. Here are the steps to follow.

1) Subtract 15 dB from the measured isolation between uplink and downlink branches of the antenna/signal distribution system. This is the maximum usable gain level for both the uplink and downlink path.

2) Accessing the user menu through the front panel, set the gain of the uplink path to the level determined in step 1. A detailed explanation of how to negotiate the menu system is given on page 9.

3) Repeat step 2 for the downlink path.

NORMAL OPERATION

Power is applied to the signal booster by turning on the AC power switch located on the junction box inside the cabinet, refer to figure 2. The following startup sequence occurs.

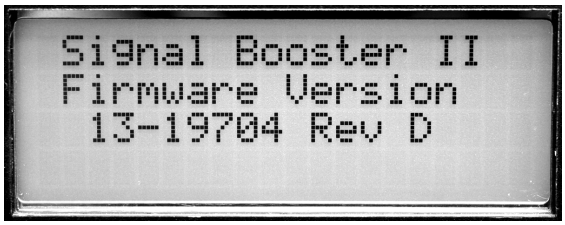

Figure 5: Software version is displayed briefly during the boot-up sequence.

1) At turn-on, the four status LEDs on the front panel glow red for about 5 seconds as the result of entering a self-check mode.

2) The two green OLC light bars will be fully lit along their length for approximately 5 seconds.

3) The LCD display shows the firmware revision screen for about 5 seconds (see **Figure 5**).

4) After the self check is complete, the four status lights should turn green and the light bars should be dark unless a signal is activating OLC action in either the uplink or downlink.

WARNING

If the OLC light-bar segments on both the Uplink and Downlink display light-up and pulse on and off every 1 to 3 seconds simultaneously, **SHUT OFF THE POWER IMMEDIATELY!** The booster may be oscillating. Disconnect the uplink and downlink antenna connections and measure the isolation between the two branches to insure there is sufficient isolation. Reset the booster gain as needed.

5) The LCD display should appear similar to **Figure 6** after the self check is complete.

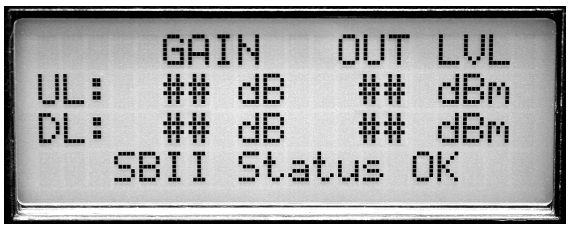

Figure 6: Normal Operational LCD Display.

LED Status indicators
The SB II front panel has 4 status LEDs that glow green or red to indicate the general health of 4 subsystems from a DC perspective. Additionally, the plug-in, Low-Level and Mid-Level amplifier cards have tri-color (green-orange-red) status LEDs visible when the cabinet door is open.

FRONT PANEL LEDS:
24V: Green indicates the 24 volt DC Power system is operating properly.

12V: Green indicates the 12 volt DC power system is operating properly.

UL PA: Green indicates that the uplink power amplifier is drawing current within the expected operating range and at a safe temperature.

DL PA: Green indicates that the downlink power amplifier is drawing current within the expected operating range and at a safe temperature.

Module LEDS:
Mid-Level, Low-Level, Low Gain Module: Green indicates current or device temperature within the expected operating range. Orange indicates current or temperature slightly out of the expected range but the overall booster operation may still appear normal. Red indicates a large departure from normal current or device temperature and booster operation is likely to be affected. See page 11 for more details about alarm operation.

Attenuator Module: Green only indicating DC power is applied to the card.

OLC LIGHT BARS
Ideally, there should be little or no light bar activity. Each light bar segment represents an average 3 dB of OLC gain reduction. OLC (output level control) is meant to reduce gain for transient episodes of very strong signals. However, when OLC is active, gain is reduced for all signals being processed by that booster branch and that reduction may compromise communications for weaker signals in the booster's passband.

If more than 2 or 3 light-bar segments are lit up more than occasionally, it is advised that the gain of that branch be reduced. See the SET GAIN paragraph on page 10 for details.

Front Panel Controls & the LCD Display
SB II is software directed so control of the system is accomplished via user interface with the control panel using the LCD display screen and the menu select buttons, see figure 2. A flow chart showing all of the possible user menu selections is shown in **Figure 7**.

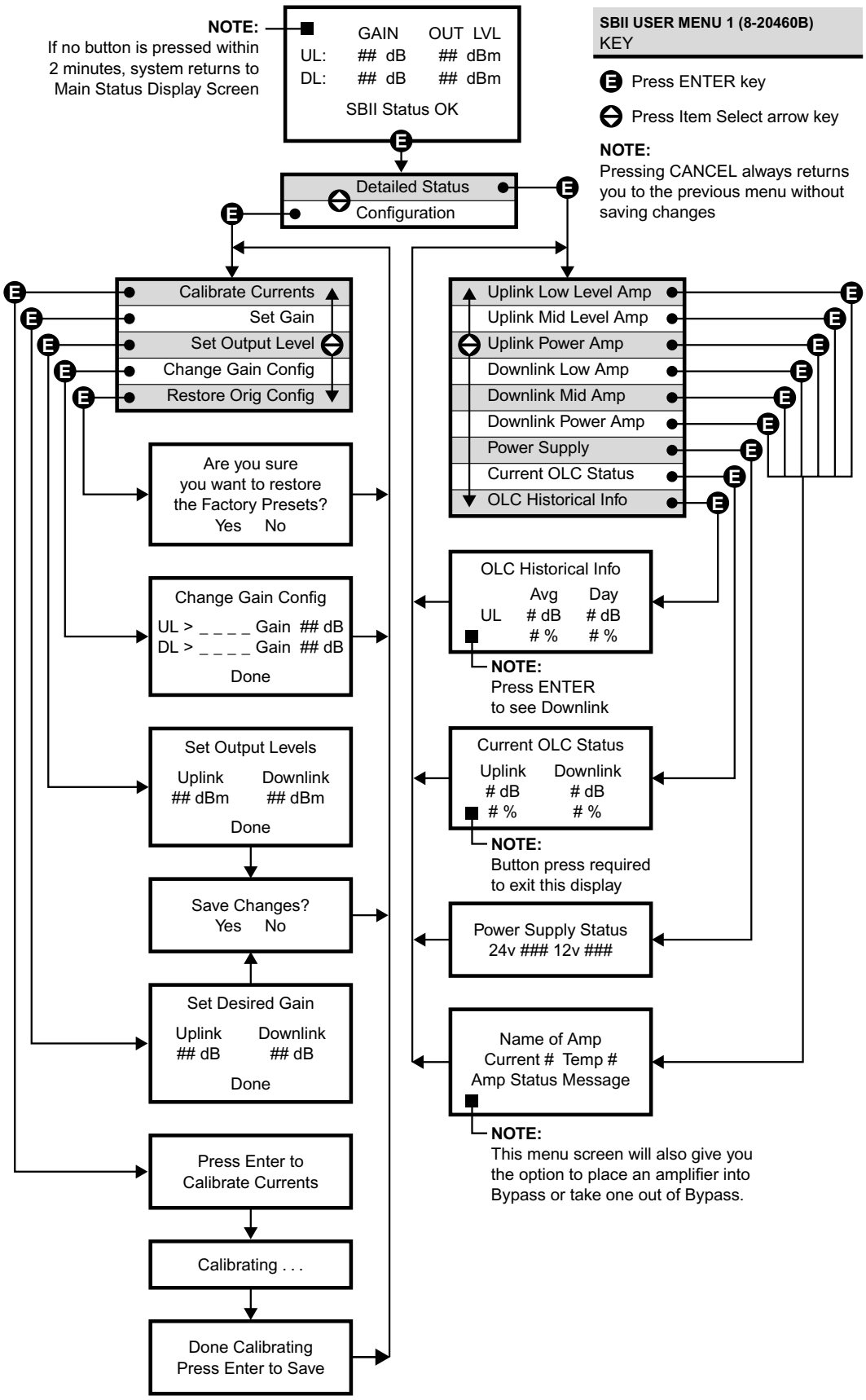

Figure 7: Signal Booster II Menu System.

LCD Screen
Once the boot-up sequence is completed (after several seconds) the LCD screen will switch to the main status display as shown in figure 6. This is the normal display for the signal booster. The system will return to this display from any other display if none of the menu interface buttons are pressed within 2 minutes. The exception is the OLC status display which does require a button press to exit. The main status display shows the uplink and downlink gain in dB as well as the uplink and downlink output level in dBm.

The last line of the main status display gives a summary status message for the entire signal booster. In this example "Status OK" is being displayed. Pressing the "ENTER" button will move you from the main status display into the menu selections and will permit interaction with the system. There are two main functions available within the software menus including configuration settings and detailed status displays.

Configuration Settings
In most cases, the factory default settings are the optimum values for adjustable parameters. The most common setting to be changed by the system's technician is the gain setting. This is normally done to compensate for varying values of antenna isolation as outlined earlier in this manual or to reduce excessive OLC action resulting from excessive gain.

Please thoroughly study this section before making any adjustments to the configuration values. Each configured item is discussed in detail.

NOTE

Note: Changes to configuration settings do not take affect until the Main Status screen is re-enabled. This occurs automatically after 2 minutes without button input or manually by pressing the Enter/Done/Cancel buttons to return to the status screen.

RESTORE ORIG CONFIG
This command will restore all configured settings to their original factory default values. SB II ships from the factory preset to the lowest gain possible.

CALIBRATE CURRENTS
Use this command when replacing an RF amplifier. This function automatically calibrates the current alarm "trip" point of each amplifier in the system. Due to manufacturing tolerances there are small differences in current draw between amplifier assemblies. This software function matches the alarm sensing circuit to the respective amplifier assembly and should be repeated whenever an amplifier assembly is replaced.

SET GAIN
This function allows the user to electronically set the gain of the booster in 0.5 dB increments over a range of 30 dB. Gain can be adjusted independently for both the uplink and downlink channels but in most cases both uplink and downlink should be set to the same gain value.

Know your antenna isolation before making this adjustment. We recommend that you temporarily disconnect both the uplink and downlink antennas when setting the gain to avoid the possibility of causing the unit to oscillate. After changing the setting, power the unit down, reconnect the antennas and power-up the booster.

NOTE

Note: A reduction in system gain will also result in an equal reduction in the OLC dynamic range, refer to the section titled "OLC" on page 11.

SET OUTPUT LEVEL
Allows the output power for the uplink and downlink channels to be independently adjusted in 0.5 dB increments up to +31 dBm. Note that the OLC circuitry will maintain the systems output level at the values you have selected in this menu.

Use this function ONLY if your system is causing some form of interference to another radio system. You can only reduce the booster's output power with this command.

CHANGE GAIN CONFIGURATION
Insures proper gain readings when changing basic booster gain by changing the type of plug-in card assemblies.

Use of this menu is ONLY needed when converting your stock SB II to a different gain level by changing the low level, mid-level plug-in amplifier card or the addition of an attenuator card. The addition of these cards will change the unit to another model within the UHF SB II family, see table 2. Don't confuse this with simple amplifier bypassing to reduce gain. Uplink and down link can be set indepen-

dently. Choices for gain are Full, Mid or Low and the ENTER key toggles the gain setting. The corresponding gain level is displayed. Select DONE using the arrow keys and press ENTER to return to the menu. Use the CANCEL button to return to the Status Display.

Detailed Status Screens

These items allow a detailed examination of system components including; all amplifiers (current draw and temperature), the power supply (voltage level), and the OLC function (present status and historical archive). Each item is discussed below in detail.

AMPLIFIERS

A separate status screen is available for each amplifier in the system. When an amplifier is selected this function will display the present current draw of that amp as well as its present operating temperature in degrees Celsius. In addition, a status message will indicate if the amplifier is connected and whether the amplifier is bypassed or not bypassed. This menu selection also provides the option of placing an amplifier in bypass or taking an amplifier out of bypass.

The current draw will be blank if an amplifier is not connected, will display BYP if the amplifier is bypassed, and will display ATTEN if an attenuator card is being used in place of the amplifier card.

NOTE

The power amplifier currents will normally fluctuate up to 850 ma when signals are present.

POWER SUPPLY

This function displays the real time power supply voltages for both 24 volt and 12 volt supplies.

OLC

This screen shows the amount of attenuation presently being used by the OLC for both the uplink and downlink channels. In addition, the percentage of OLC presently being used is also shown.

NOTE

The amount of OLC currently being used in either the uplink or downlink channels is also indicated by LED bar graph displays located on the display panel. Each segment represents 2 to 4 dB of attenuation depending on the gain setting of the booster. The OLC bars should only be active occasionally and no more than 3 or 4 segments briefly lit. Constant light bar activity means the booster gain needs to be reduced for optimum performance.

NOTE

The system has 60 dB of OLC dynamic range. However, the dynamic range of the OLC is reduced when the user selectable gain is reduced. The reduction will be an equal amount. For instance, if the user selectable gain is reduced by 20 dB then the OLC dynamic range will also be reduced by 20 dB.

OLC DATALOG

This screen displays an OLC Datalog which is the OLC data over the past 100 days for both uplink and downlink branches of the system. This is a rolling 100 day log with day 101 overlapping day 1 and so forth. Day zero represents the current day while day one represents yesterday and so on. The logged data is stored in non-volatile memory and will not be erased when the unit is powered down.

The average OLC attenuation used when the OLC was active is given both for individual days and over the entire past 100 days. The percentage of time the OLC was active is also given for both individual days and over the past 100 days. This archived information will permit the creation of a user signal profile to facilitate optimum system configuration and performance.

This archive feature will allow you to see if the gain of the unit is set too high or if there are transient episodes of strong signals perhaps desensing other channels being amplified by the booster.

Alarms

The system continuously monitors the current draw and operating temperature of each amplifier as well as the voltage level of the +12 and +24 VDC supplies. If any of these parameters exceed normal operating levels by a factory preset percentage the system enters an alarm condition. Notification of an alarm condition is provided by LED indicators and Form-C contacts available via the alarm terminal screws.