LED INDICATORS

There are LED indicators for each amplifier in the system as well as the +12 and +24 VDC power supply voltages. The LED indicators for the low, mid, and low gain amplifiers are located on the individual plug-in module. These are tri-color LED's with green representing NORMAL operation, orange representing a WARNING condition, and red indicating a FAULT. A warning condition occurs when the current draw of the amplifier exceeds nominal by +/- 20%. Fault conditions occur when the current draw exceeds +/- 30% or the amplifiers operating temperature exceeds 80° Celsius. The LED for the attenuator card is green only and indicates DC power applied to the card.

The LED indicators for the power amplifiers are located on the display panel next to the menu select buttons and are dual color LED's. Green represents NORMAL operation while red indicates a FAULT condition. Fault conditions occur when the current draw exceeds 900 ma or falls below 200 ma. Also, whenever the amplifiers operating temperature exceeds 95° Celsius. The power amplifiers do not have a warning state.

The power supply LED indicators are located on display panel next to the menu selection buttons and are also dual color. Green representing normal operation and red a fault condition. A fault condition for the +24 VDC supply occurs whenever the voltage potential drops below +16 VDC (30% below nominal). Likewise, a fault for the +12 VDC supply occurs when the potential is below +8 VDC (30% below nominal).

FORM-C CONTACTS

Form-C contacts are available inside the cabinet next to the power supply assembly, see figure 2. These screw terminals are intended for connection to the customers supervisory alarm or data acquisition system. One set of terminals supplies notification of any alarm condition occurring and the second set of contacts indicate the system is operating on battery backup power.

PERFORMANCE SURVEY

It is a good idea to document the performance of the system after installation so that a reference exists for future comparisons. This information can make troubleshooting an interference problem or investigation of a complaint about system performance much easier. If there are coverage problems with a system, this survey will usually reveal them allowing corrective measures to be taken before the system is put into routine use. The fol-

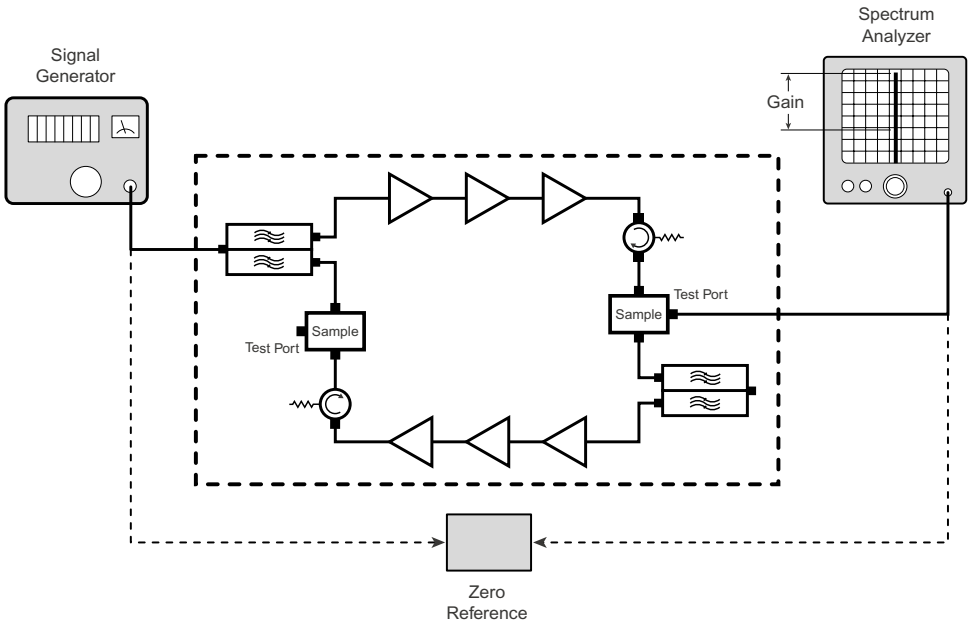

Figure 8: Measuring signal booster gain.

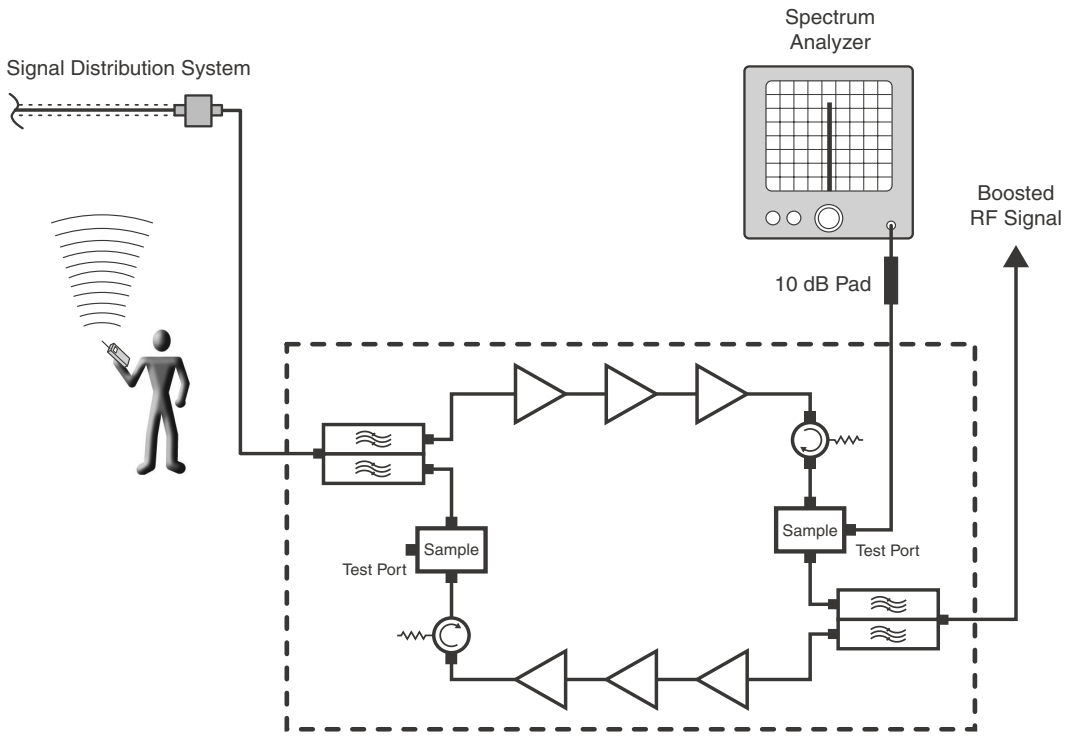

Figure 9: Methodology for doing a performance survey of the signal distribution system.

lowing is an outline of how to do such a survey. Because the nature of each installation can be quite different, only a broad outline is given.

1) Measure the gain of the signal booster being careful not to exceed the maximum input level. **Figure 8** shows this being done using a signal generator and spectrum analyzer. Record the measured values for each passband. We recommend that a 50 ohm load be connected to the unused RF port on the bottom of the cabinet during the gain test.

2) The spectrum analyzer is connected to the -30 dB signal sampler port following the final output amp. This port will allow the observation of the amplifier output at a considerably reduced output level. This decoupling value (-30 dB) needs to be added to any measured signal value in order to arrive at the actual signal level.

3) With a spectrum analyzer connected to the signal sampler port (see **Figure 9**), have personnel with handheld radios move to several predetermined points and key their radios. Record the level of these signals as observed on the analyzer and also record the location of the person transmitting. In this way, a map of the systems performance can be generated.

4) For signals coming from a fixed antenna or station, record the level of all the desired incoming signals for future reference.

MAINTENANCE AND REPAIR

Signal boosters manufactured by TX RX Systems, Inc. can perform for years with little maintenance and repair. However, if the amplifiers are subjected to excessively high signal levels, power surges or lightning strikes, failures may occur. The following procedures may be followed for detecting a malfunctioning unit or as part of a periodic maintenance program.

1) The heatsink area should be cleared of dust and debris.

2) Inspect the unit to see that the two power supply LED DC indicators are lit (remove any dust or debris that may obscure the LEDs). This will

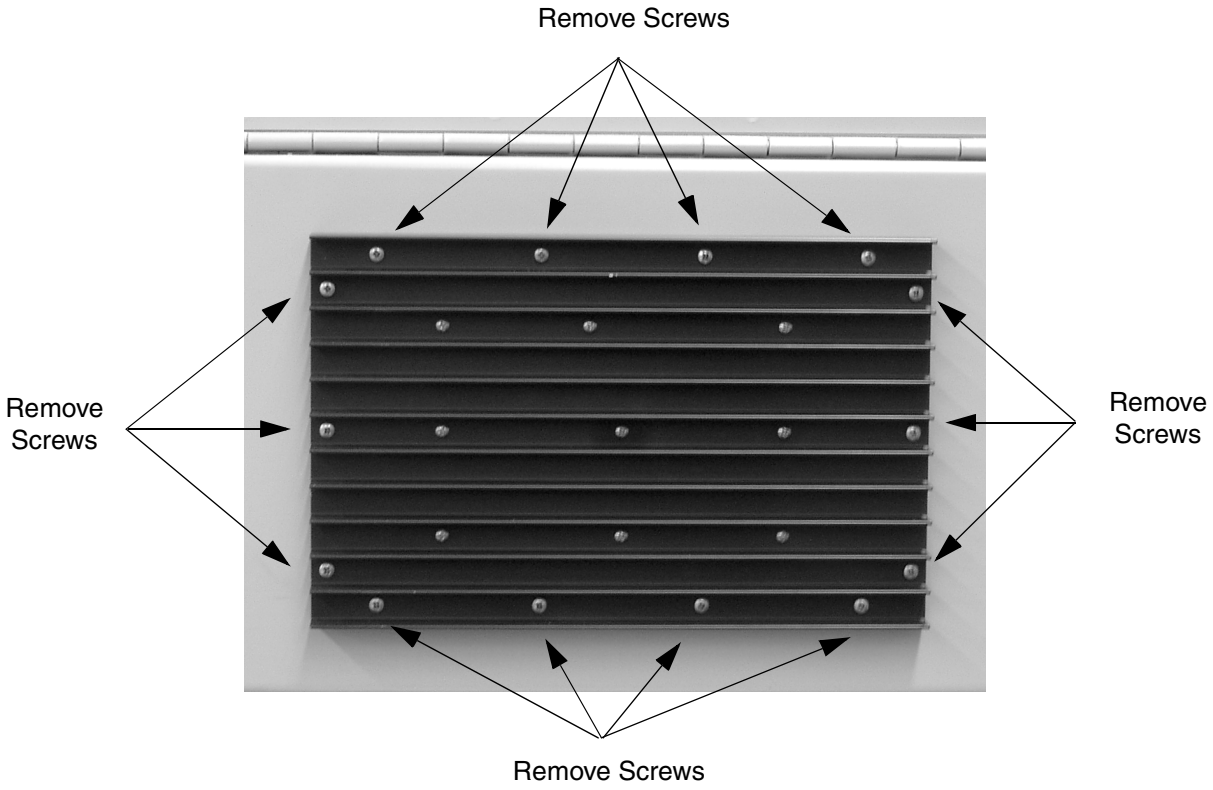

Figure 10: Remove 14 mounting screws to detach amplifier assembly from cabinet.

verify that DC power is flowing properly. Check all hardware for tightness.

3) Compare system performance to initial performance levels measured when the system was first installed. The lack of signal can be traced to a malfunctioning amplifier by progressive signal monitoring from the output (far end) to the input end of the system noting the area where the signal returns to normal level. The next amplifier toward the output end of the system will probably be the one that failed.

   or

   Measure the gain at any convenient frequency in the working frequency band to verify that the performance is still within specifications.

Power Amplifier Replacement

The SB II power amplifiers are field replaceable. Follow the steps listed below in sequential order. The required tools are a #1 Phillips screwdriver and a 5/16” open-ended wrench.

Figure 11: Slide amplifier towards bottom of cabinet to remove upper cable.

Figure 12: Slide amplifier towards top of cabinet to remove lower cables.

Note: Power to the SB II cabinet must be turned OFF during the power amplifier replacement process.

1) Remove the Phillips screws which hold the amplifier into place, refer to **Figure 10**. The nuts holding the screws are pressed into the cabinet and will remain in place when the screws are removed.

2) Slide the amplifier towards the bottom of the cabinet as far as it will go. This will allow the top RF connector to clear the opening. Tilt the top of the amplifier outwards and remove the top RF cable at the SMA connector using the 5/16" wrench. See **Figure 11**.

3) Slide the amplifier assembly towards the top of the cabinet as far as it will go. This will allow the bottom RF connector and grey control cable to clear the opening. Tilt the bottom of the amplifier outwards and remove the bottom RF cable at the SMA connector and the grey control cable. To remove the grey cable from the socket on the amplifier it is necessary to squeeze the top and bottom of the connector together to release a hold down tab. When properly squeezed the grey cable will disconnect easily from the amplifier. Refer to **Figure 12**.

4) To replace the amplifier assembly repeat steps 1 through 3 in reverse order. When replacing the RF cables do not overtighten the SMA connectors. They should be tightened just slightly more than hand tight or to the specification of 7 in/lbs. The replacement amplifier comes with an attached gasket which must press up against the outside of the cabinet firmly and squarely in order to provide a correct moisture seal.

Module Replacement

The SB II modules are field replaceable. Follow the steps listed below in sequential order. The required tools are a #1 Phillips screwdriver. Two thumb screws hold each module into place.

Note: Power to the SB II cabinet must be turned OFF during the module replacement process except for the amplifier modules which are "HOT" switchable.

1) Loosen the two thumb screws which hold the module into place. Phillips screws are incorporated into the thumbscrews and they may need to be loosened first.

2) Grasping the two loosened thumb screws pull the module straight out of the card cage.

3) To install the replacement module place the module into the guide-rails of the slot and press down firmly into place. Each type of module is keyed uniquely to fit in only one slot within the card cage. Once the card is seated into place properly tighten the thumb screws.

The SB II low level and mid level amplifier stages are field replaceable by simply removing the module and plugging in a replacement. These modules are HOT switchable meaning they can be swapped without powering down the system. RF cables attached to the modules must be removed (5/16" wrench) prior to swapping the modules and must be re-attached after the new module is in place. when replacing the RF cables do not overtighten the SMA connectors. They should be tightened just slightly more than hand tight or to the specification of 7 in/lbs.

Modules can be swapped between the uplink and downlink branches for troubleshooting purposes. If a problem exists in one branch and the problem moves to the other branch when modules are swapped around this indicates a defective module.

Note: After an amplifier module is replaced use the Calibrate Currents software function to properly set the amplifiers alarm trip point, see page 10. Due to slight differences in component tolerances the trip point must be reset for any new amplifier assemblies introduced into the system.

Display/User Interface Assembly Replacement

The SB II Display/User Interface assembly is field replaceable. Follow the steps listed below in sequential order. No tools are required.

Note: Power to the SB II cabinet must be turned OFF during the display/user interface replacement process.

1) Loosen the two thumb-nuts which hold the display/user interface assembly to the card cage.

2) Gently tilt only the top of the assembly up from the card cage. Keep the bottom of the assembly in place. The bottom mounting plate (part of the card cage) has an overhang on it to support the display/user interface board. If the assembly is lifted straight out the overhang could possibly damage the interface circuit board.

3) With the display/user interface board standing up straight gently move it upwards while lifting it out about an inch or two. This should allow the overhang to clear the interface circuit board without damage.

4) Remove the ribbon cable that connects the display/user interface assembly to the card cage, see **Figure 13**.

5) To replace the display/user interface assembly repeat steps 1 through 4 in reverse order.

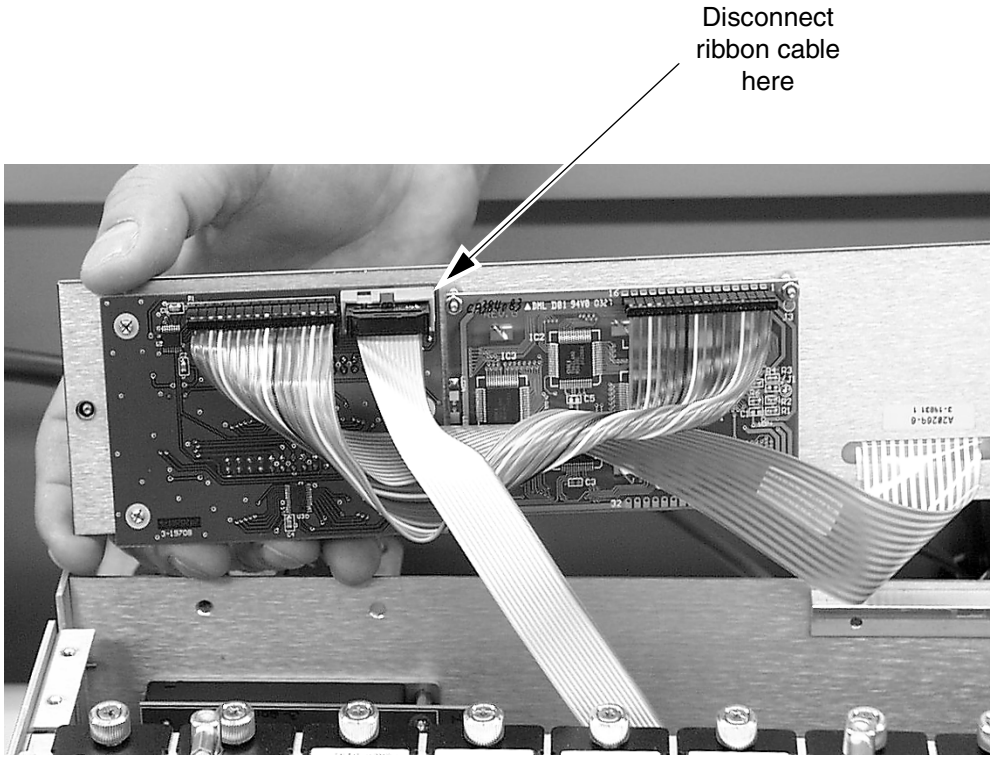

Figure 13: Disconnecting the display/user interface assembly from the card cage.

Power Supply Replacement
The SB II power supply assembly is field replaceable. Follow the steps listed below in sequential order. The required tools are a #1 Phillips screwdriver.

1) Turn off AC power at the junction box.

2) Disconnect the 3 conductor cable that brings AC power to the supply from the junction box.

3) Disconnect the red and black leads from the power supply that connect to the card cage.

4) Remove the Phillips screws that hold the power supply mount bracket to the back plate and remove the assembly from the cabinet.

5) Reverse steps 4 through 2 to install the replacement power supply.

Duplexer / Filter Replacement
The component assemblies of the duplexer are field replaceable. Follow the steps listed below in sequential order. The required tools are a #1 Phillips screwdriver with an extended shaft to reach down far enough into the unit to loosen mounting screws.

NOTE

Note: Power to the SB II cabinet must be turned OFF during the assembly replacement process.

1) All RF cables attached to the assembly must be removed.

2) Remove the Phillips screws that hold the assembly mount brackets to the back plate and remove the assembly from the cabinet.

3) Reverse steps 2 and 1 to install the replacement assembly. When replacing the RF cables do not overtighten the SMA connectors. They should be tightened just slightly more than hand tight or to the specification of 7 in/lbs.

Card Cage Replacement
To replace the card cage follow the steps listed below in sequential order. The required tools are a #1 Phillips screwdriver with an extended shaft to reach down far enough into the unit to loosen the mounting screws.

NOTE

Note: Power to the SB II cabinet must be turned OFF during the card cage replacement process.

1) Disconnect the display/user interface assembly.

2) Disconnect 4 cables at the backplane of the card cage which are assessable with the display/user interface board out of the way.

3) Remove the row of Phillips screws which hold the card cage to the back plate. There is a row of screws at the top and bottom of the cage.

4) To install a replacement cage perform steps 3 through 1 in reverse order.

RECOMMENDED SPARES

It is recommended that one spare of each of the following assemblies be kept on hand for emergency repair purposes; Power Supply 8-20667, Uplink/Downlink Power Amplifier either 3-20806, 3-20807, 3-20303, or 3-20628 (depending on the specific model of UHF SB II), Mid Level Amplifier Card 3-19576, Low Level Amplifier Card 3-19935, Low Gain Amplifier Card 3-20294, Attenuator Card 3-20208, Power Distribution Card 3-19833, Controller Card 3-19832, and the Display/User Interface Assembly 3-19831.

Part Number	61-70-50-A2.0-G1	61-71-50-A0.5-G1	61-72-50-A0.5-G1
Maximum Gain:	+80 dB	+80 dB	+80 dB
Gain Adjustment:	Programmable attenuation, 0-30 dB, 0.5 dB steps	Programmable attenuation, 0-30 dB, 0.5 dB steps	Programmable attenuation, 0-60 dB, 0.5 dB steps
3rd Order Output Intercept Point:	+50 dBm minimum, with no attenuation	+50 dBm minimum, with no attenuation	+50 dBm minimum, with no attenuation
Max RF Power Output	+32 dBm (single carrier)	+32 dBm (single carrier)	+32 dBm (single carrier)
RF Sampler:	PA Output sampler ports	PA Output sampler ports	PA Output sampler ports
Noise Figure (without attenuation):	5.0 dB maximum	8.0 dB maximum	8.0 dB maximum,
Operating Temperature Range:	-30°C to +50° C	-30°C to +50° C	-30°C to +50° C
Nominal Impedance:	50 ohms, <1.5:1 VSWR	50 ohms, <1.5:1 VSWR	50 ohms, <1.5:1 VSWR
Input/Output Connectors:	N female	N female	N female
RF Sampler Connectors:	BNC female	BNC female	BNC female
AC Power Input:	100-240 VAC; 50-60 Hz	100-240 VAC; 50-60 Hz	100-240 VAC; 50-60 Hz
DC Input Voltage:	+24 to +30 VDC	+24 to +30 VDC	+24 to +30 VDC
Unit Power Consumption (AC/DC):	<100 VA	<100 VA	<100 VA
Housing:	NEMA 4, NEMA 4X Rack Mount	NEMA 4, NEMA 4X Rack Mount	NEMA 4, NEMA 4X Rack Mount
Nominal Size:	36" x 30" x 12"	30" x 24" x 12"	30" x 24" x 12”
Net Weight:	< 100 lbs.	< 100 lbs.	< 100 lbs.

CELSIUS TO FAHRENHEIT CONVERSION TABLE

CELCIUS	FARENHEIT
105	221.0
104	219.2
103	217.4
102	215.6
101	213.8
100	212.0
99	210.2
98	208.4
97	206.6
96	204.8
95	203.0
94	201.2
93	199.4
92	197.6
91	195.8
90	194.0
89	192.2
88	190.4
87	188.6
86	186.8
85	185.0
84	183.2
83	181.4
82	179.6
81	177.8
80	176.0
79	174.2
78	172.4
77	170.6
76	168.8
75	167.0
74	165.2
73	163.4
72	161.6
71	159.8
70	158.0
69	156.2
68	154.4
67	152.6

CELCIUS	FARENHEIT
66	150.8
65	149.0
64	147.2
63	145.4
62	143.6
61	141.8
60	140.0
59	138.2
58	136.4
57	134.6
56	132.8
55	131.0
54	129.2
53	127.4
52	125.6
51	123.8
50	122.0
49	120.2
48	118.4
47	116.6
46	114.8
45	113.0
44	111.2
43	109.4
42	107.6
41	105.8
40	104.0
39	102.2
38	100.4
37	98.6
36	96.8
35	95.0
34	93.2
33	91.4
32	89.6
31	87.8
30	86.0
29	84.2
28	82.4

CELCIUS	FARENHEIT
27	80.6
26	78.8
25	77.0
24	75.2
23	73.4
22	71.6
21	69.8
20	68.0
19	66.2
18	64.4
17	62.6
16	60.8
15	59.0
14	57.2
13	55.4
12	53.6
11	51.8
10	50.0
9	48.2
8	46.4
7	44.6
6	42.8
5	41.0
4	39.2
3	37.4
2	35.6
1	33.8
0	**32.0**
-1	30.2
-2	28.4
-3	26.6
-4	24.8
-5	23.0
-6	21.2
-7	19.4
-8	17.6
-9	15.8
-10	14.0
-11	12.2

CELCIUS	FARENHEIT
-12	10.4
-13	8.6
-14	6.8
-15	5.0
-16	3.2
-17	1.4
-18	-0.4
-19	-2.2
-20	-4.0
-21	-5.8
-22	-7.6
-23	-9.4
-24	-11.2
-25	-13.0
-26	-14.8
-27	-16.6
-28	-18.4
-29	-20.2
-30	-22.0
-31	-23.8
-32	-25.6
-33	-27.4
-34	-29.2
-35	-31.0
-36	-32.8
-37	-34.6
-38	-36.4
-39	-38.2
-40	-40.0
-41	-41.8
-42	-43.6
-43	-45.4
-44	-47.2
-45	-49.0
-46	-50.8
-47	-52.6
-48	-54.4
-49	-56.2
-50	-58.0