RF Test Report

Applicant	:	UNIPULSE Corporation
Product Name	:	RF Module
Trade Name	:	UNIPULSE
Model Number	:	127E02A0
Applicable Standard	:	FCC 47 CFR PART 15 SUBPART C ANSI C63.10:2013
Received Date	:	Nov. 21, 2023
Test Period	:	Dec. 08, 2023 ~ Mar. 30, 2024
Issued Date	:	Apr. 24, 2024

Issued by

Eurofins E&E Wireless Taiwan Co., Ltd.
No. 140-1, Changan Street, Bade District,
Taoyuan City 334025, Taiwan (R.O.C.)
Tel：+886-3-2710188 / Fax：+886-3-2710190

Taiwan Accreditation Foundation accreditation number: 1330
Frequency Range: 9 kHz to 325 GHz
Bade test site：
Test Firm Registration Number: 226252
Test Firm Designation Number: TW0010
Wugu test site：
Test Firm Registration Number: 191812
Test Firm Designation Number: TW0034

Note:
1.The test results are valid only for samples provided by customers and under the test conditions described in this report.
2.This report shall not be reproduced except in full, without the written approval of Eurofins E&E Wireless Taiwan Co., Ltd.
3.The relevant information is provided by customers in this test report. According to the correctness, appropriateness or completeness of the information provided by the customer, if there is any doubt or error in the information which affects the validity of the test results, the laboratory does not take the responsibility.

Revision History

Rev.	Issued Date	Description	Revised by
00	Apr. 24, 2024	Initial Issue	Abby Huang

Verification of Compliance

Applicant	:	UNIPULSE Corporation
Product Name	:	RF Module
Trade Name	:	UNIPULSE
Model Number	:	127E02A0
FCC ID	:	F3O-127E02A0
Applicable Standard	:	FCC 47 CFR PART 15 SUBPART C ANSI C63.10:2013
Test Result	:	Complied
Performing Lab.	:	Eurofins E&E Wireless Taiwan Co., Ltd. No. 140-1, Changan Street, Bade District, Taoyuan City 334025, Taiwan (R.O.C.) Tel：+886-3-2710188 / Fax：+886-3-2710190 Taiwan Accreditation Foundation accreditation number: 1330

Testing Laboratory 1330

Eurofins E&E Wireless Taiwan Co., Ltd. tested the above equipment in accordance with the requirements set forth in the above standards. All indications of Pass/Fail in this report are opinions expressed by Eurofins E&E Wireless Taiwan Co., Ltd. based on interpretations and/or observations of test results. The test results show that the equipment tested is capable of demonstrating compliance with the requirements as documented in this report.

Approved By : Kai Yu Yang

TABLE OF CONTENTS

1 General Information 5
1.1. Summary of Test Result 5
1.2. Testing Location 5
1.3. Measurement Uncertainty 6
1.4. Test Site Environment 6
2 EUT Description 7
3 Test Methodology 8
3.1. Mode of Operation 8
3.2. EUT Test Step 8
3.3. Configuration of Test System Details 9
3.4. Test Instruments 11
4 Measurement Procedure 15
4.1. AC Power Line Conducted Emission Measurement 15
4.2. Radiated Emission Measurement 17
4.3. Maximum Conducted Output Power Measurement 22
4.4. 6 dB RF Bandwidth Measurement 23
4.5. Maximum Power Density Measurement 24
4.6. Out of Band Conducted Emissions Measurement 25
4.7. Antenna Measurement 26
5 Test Results 27
5.1. Conducted Emission 27
5.2. Radiated Emission Measurement 29

Appendix A. Test Data
Appendix B. Test Plots
Appendix C. Test Setup Photographs

1 General Information

1.1. Summary of Test Result

Standard	Item	Result	Remark
15.207	AC Power Conducted Emission	PASS	-----
15.247(d)	Transmitter Radiated Emissions	PASS	-----
15.247(b)(3)	Max. Output Power	PASS	-----
15.247(a)(2)	6 dB RF Bandwidth	PASS	-----
15.247(e)	Power Spectral Density	PASS	-----
15.247(d)	Out of Band Conducted Spurious Emission	PASS	-----
15.203	Antenna Requirement	PASS	-----

Standard	Description
CFR47, Part 15, Subpart C	Intentional Radiators
ANSI C63. 10: 2013	American National Standard of Procedures for Compliance Testing of Unlicensed Wireless Devices
KDB 558074 D01 15.247 Meas Guidance v05r02	GUIDANCE FOR COMPLIANCE MEASUREMENTS ON DIGITAL TRANSMISSION SYSTEM, FREQUENCY HOPPING SPREAD SPECTRUM SYSTEM, AND HYBRID SYSTEM DEVICES OPERATING UNDER SECTION 15.247 OF THE FCC RULES

Decision Rule

■ Uncertainty is not included.

□ Uncertainty is included.

1.2. Testing Location

Lab Name: Eurofins E&E Wireless Taiwan Co., Ltd.

Site Address: ■ No. 140-1, Changan Street, Bade District, Taoyuan City 334025, Taiwan (R.O.C.)

Site Address: □ No. 2, Wuquan 5th Rd. Wugu Dist., New Taipei City, Taiwan (R.O.C.)

1.3. Measurement Uncertainty

Test Item	Frequency	Uncertainty	
		BD	WG
Conducted Emission	150 kHz ~ 30 MHz	2.7 dB	2.6 dB
Conducted Output Power		1.1 dB	1.1 dB
RF Bandwidth		4.5 %	4.5 %
Power Spectral Density		1.1 dB	1.1 dB

Test Item	Frequency	Uncertainty			
		96601-BD	96603-BD	96602-WG	96603-WG
Radiated Emission	9 kHz ~ 30 MHz	1.9 dB	1.9 dB	1.6 dB	1.6 dB
	30 MHz ~ 1000 MHz	4.9 dB	4.9 dB	4.8 dB	4.8 dB
	1000 MHz ~ 18000 MHz	4.9 dB	5.0 dB	5.0 dB	5.2 dB
	18000 MHz ~ 26500 MHz	4.3 dB	4.4 dB	4.4 dB	4.5 dB
	26500 MHz ~ 40000 MHz	4.5 dB	4.5 dB	4.6 dB	4.5 dB

1.4. Test Site Environment

Items	Required (IEC 60068-1)	Interval(*)
Temperature (°C)	15-35	20-30
Humidity (%RH)	25-75	45-75

(*)The measurement ambient temperature is within this range.

2 EUT Description

The product specifications of the EUT presented in the report are declared by the manufacturer who shall take full responsibility for the authenticity(except Max. RF Output Power).

Applicant	UNIPULSE Corporation 9-11, Nihonbashi Hisamatsucho, Chuo-ku, Tokyo 103-0005 Japan		
Product Name	RF Module		
Trade Name	UNIPULSE		
Model No.	127E02A0		
FCC ID	F3O-127E02A0		
Frequency Range	920.7 - 924.5 MHz		
Modulation Type	FSK		
Operate Temp. Range	-10 ~ +50 ℃		
EUT Power Rating	DC 2.7-3.3 V		
Antenna information	Antenna	Type	Max. Gain (dBi)
	ANT-1 / ANT-2	Monopole Antenna	2.52
Max. RF Output Power	0.00555 W		

Channel List							
CH	MHz	CH	MHz	CH	MHz	CH	MHz
1	920.7	6	921.7	11	922.7	16	923.7
2	920.9	7	921.9	12	922.9	17	923.9
3	921.1	8	922.1	13	923.1	18	924.1
4	921.3	9	922.3	14	923.3	19	924.3
5	921.5	10	922.5	15	923.5	20	924.5

3 Test Methodology

3.1. Mode of Operation

Decision of Test Eurofins has verified the construction and function in typical operation. All the test modes were carried out with the EUT in normal operation, which was shown in this test report and defined as:

Pre-Test Mode	Final-Test Mode
SRD	V

Note : ANT-2 is the worst case in SRD Mode

Software used to control the EUT for staying in continuous transmitting mode was programmed.

After verification, all tests were carried out with the worst case test modes.

By preliminary testing and verifying three axis (X, Y and Z) position of EUT transmitted status, it was found that “Y axis” position was the worst, then the final test was executed the worst condition and test data were recorded in this report.

3.2. EUT Test Step

1	Setup the EUT shown on “Configuration of Test System Details”.
2	Turn on the power of all equipment.
3	Setup Continuous TX
4	EUT run test program.

3.3. Configuration of Test System Details

Conduction Emissions

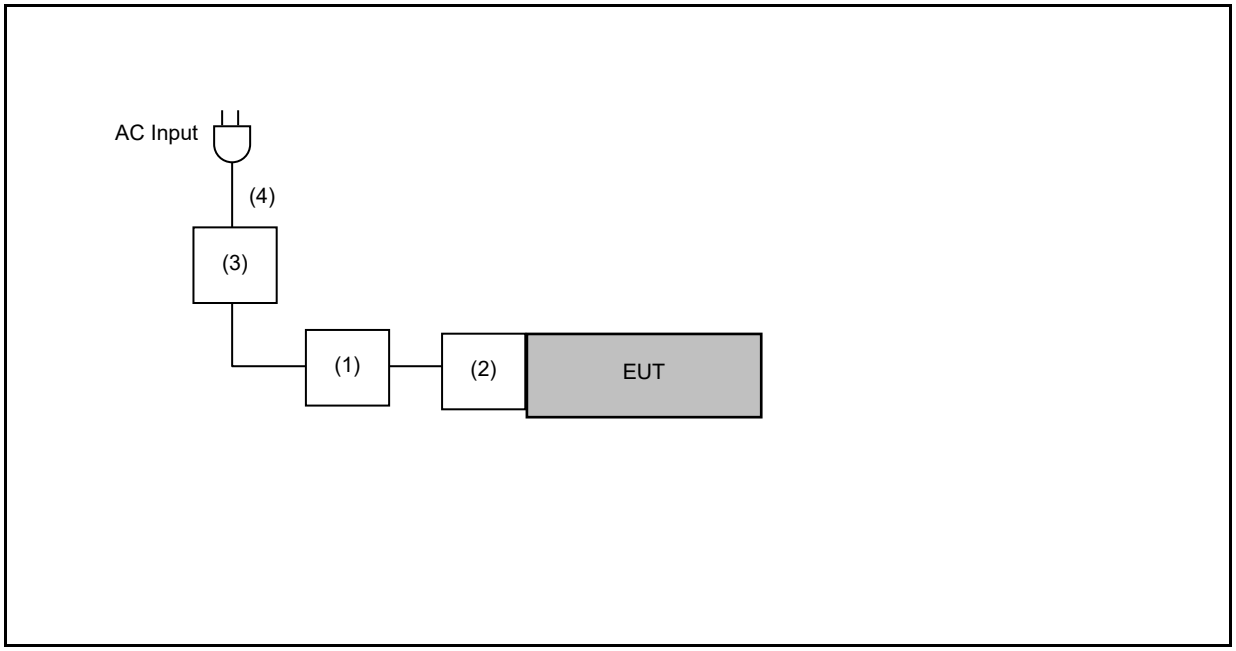

Radiated Emissions

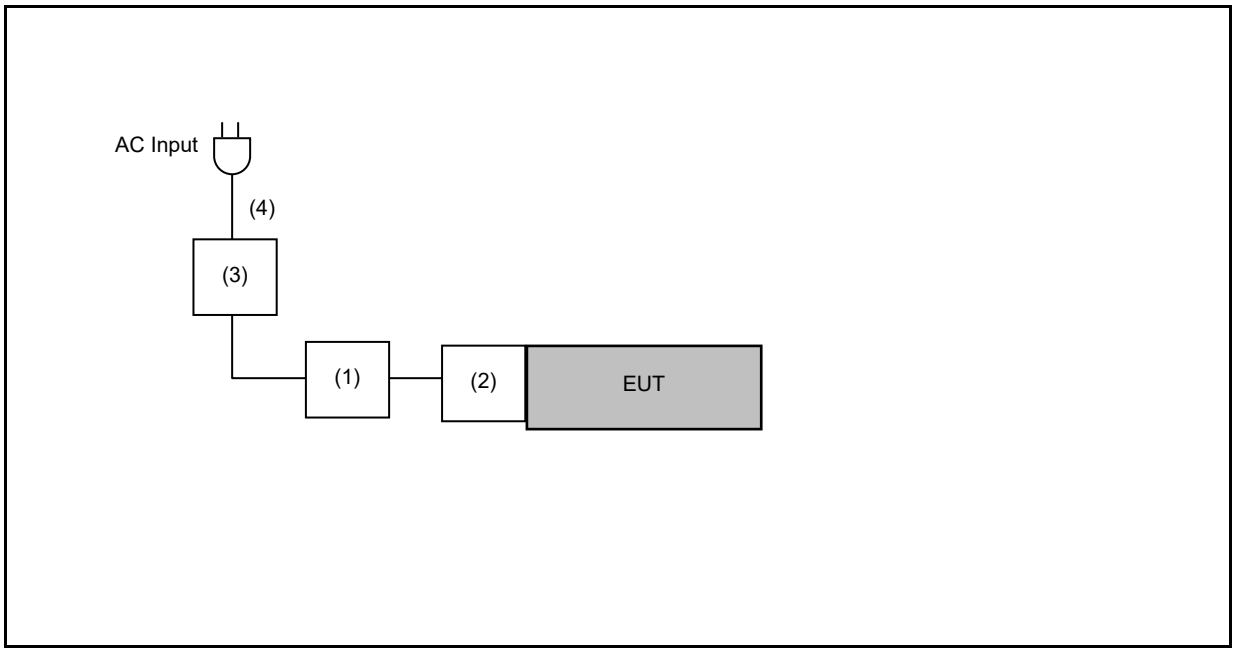

Product		Manufacturer	Model Number	Serial Number	Power Cord
(1)	Controller	UNIPULSE	ALC	---	---
(2)	Test Fixture	UNIPULSE	AZ21-0472	---	---
(3)	Adapter	MITSUMI	UIA312-0520	---	---
(4)	Power Cable	ATSUTO	KO-042+KO-0078	---	---

3.4. Test Instruments

For Conducted Emission
Test Period: Mar. 30, 2024 ~ Mar. 30, 2024
Testing Engineer: Jayson Hsieh

Test Site		Conduction01-BD				
Use	Equipment	Manufacturer	Model Number	Serial Number	Cal. Date	Cal. Period
☒	Test Receiver	R&S	ESCI	100367	May 22, 2023 May 21, 2024	1 year
☐	Test Receiver	R&S	ESCI	100722	Oct. 26, 2023	1 year
☐	Test Receiver	R&S	ESCI	101000	Nov. 23, 2023	1 year
☒	LISN	R&S	ENV216	101140	Jan. 15, 2024	1 year
☒	RF Cable	Woken	00100D1380194M	TE-02-03	Jun. 01, 2023	1 year
☒	Software	EZ EMC	1.1.4.3	N/A	N.C.R.	---

☒ means with testing used ;
☐ means without testing used
Note: N.C.R. = No Calibration Request.

For Conducted
Test Period: Mar. 11, 2024 ~ Mar. 28, 2024
Testing Engineer: Brian Lin, Andy Lu

Test Site		RF01-BD				
Use	Equipment	Manufacturer	Model Number	Serial Number	Cal. Date	Cal. Period
☒	Power Sensor	Anritsu	MA2411B	1126022	Aug. 31, 2023	1 year
☒	Power Meter	Anritsu	ML2495A	1135009	Aug. 31, 2023	1 year
☐	Power Sensor	Agilent	N1921A	MY45241957	Nov. 29, 2023	1 year
☐	Power Meter	Agilent	N1911A	MY45101619	Nov. 29, 2023	1 year
☒	Spectrum Analyzer (10 Hz~26.5 GHz)	Keysight	N9010B	MY59071418	Mar. 20, 2023 Mar. 15, 2024	1 year
☐	Spectrum Analyzer (9 kHz~26.5 GHz)	Agilent	N9010A	MY48030518	Jul. 20, 2023	1 year
☐	Spectrum Analyzer (20 Hz~26.5 GHz)	Agilent	N9020A	US47520902	Sep. 04, 2023	1 year
☐	Spectrum Analyzer (3 Hz~50 GHz)	Agilent	N9030A	MY53120541	Dec. 27, 2023	1 year
☐	Temperature & Humidity Chamber	TAICHY	MHU-225LA	980729	Mar. 29, 2023 Mar. 28, 2024	1 year
☐	Signal Generator	Keysight	N5182B	MY53052569	Apr. 17, 2023	1 year
☐	Signal Generator	Keysight	N5182BX07	MY59360221	Apr. 17, 2023	1 year
☐	MXF-G-B RF Vector Signal Generator	Agilent	N5182B	MY53050382	May 23, 2023	1 year
☐	Bluetooth Tester	R&S	CBT	100350	Mar. 20, 2023	2 years
☐	Wireless Connectivity Tester	R&S	CMW270	102208	Jun. 05, 2023	1 year
☐	Power Supply	KEITHLEY	2303	4045290	Jan. 06, 2023 Jan. 04, 2024	1 year

☒ means with testing used ;
☐ means without testing used
Note: N.C.R. = No Calibration Request.

For Radiated Emissions
Test Period: Dec. 08, 2023 ~ Mar. 26, 2024
Testing Engineer: Hung Chou, Eason Lee

Test Site		96603-BD				
Radiation test sites		Semi Anechoic Room				
Use	Equipment	Manufacturer	Model Number	Serial Number	Cal. Date	Cal. Period
☐	Spectrum Analyzer (10 Hz~44 GHz)	Keysight	N9010A	MY52221312	Jan. 07, 2023 Jan. 04, 2024	1 year
☐	Spectrum Analyzer (3 Hz~50 GHz)	Agilent	N9030A	MY53120541	Dec. 29, 2022 Dec. 27, 2023	1 year
☐	Spectrum Analyzer (2 Hz~50 GHz)	Keysight	N9030B	MY57143537	Apr. 18, 2023	1 year
☒	Spectrum Analyzer (10 Hz~44 GHz)	Keysight	N9020B	MY60112363	Jan. 13, 2023 Jan. 10, 2024	1 year
☒	Amplifier (100 kHz~1.3 GHz)	Agilent	8447D	2944A11119	Jan. 14, 2023 Jan. 10, 2024	1 year
☐	Amplifier (100 kHz~1.3 GHz)	Agilent	8447D	2944A10961	Jul. 10, 2023	1 year
☐	Broadband Amplifier (100 kHz~1 GHz)	Titan	T0910E00014330A1F	001	Jul. 24, 2023	1 year
☐	Amplifier (1 GHz~26.5 GHz)	Agilent	8449B	3008A02237	Oct. 31, 2023	1 year
☒	Broadband Amplifier (1 GHz~26.5 GHz)	Titan	T0912E01263025A1F	002	Jul. 24, 2023	1 year
☐	Preamplifier (26.5 GHz~40 GHz)	EMCI	EMC2654045	980028	Sep. 01, 2023	1 year
☒	Active Loop Antenna (9 kHz~30 MHz)	Schwarzbeck Mess-Elektronik	FMZB 1513-60	1513-60-031	Feb. 21, 2023 Feb. 23, 2024	1 year
☒	Trilog Broadband Antenna (30 kHz~1 GHz)	Schwarzbeck Mess-Elektronik	VULB9168	01146	Jun. 26, 2023	1 year
☐	Trilog Broadband Antenna (30 kHz~1 GHz)	Schwarzbeck Mess-Elektronik	VULB9168	416	Jun. 13,2023	1 year
☒	Broadband Horn Antenna (1 GHz~18 GHz)	Schwarzbeck Mess-Elektronik	9120D	02207	Jul. 07, 2023	1 year
☐	Broadband Horn Antenna (1 GHz~18 GHz)	Schwarzbeck Mess-Elektronik	9120D	9120D-550	Jul. 21, 2023	1 year
☐	Broadband Horn Antenna (18 GHz~40 GHz)	Schwarzbeck Mess-Elektronik	9170	9170-320	Jul. 21, 2023	1 year
☐	Horn Antenna (18 GHz~40 GHz)	ETS	3116	00086467	Dec. 08, 2023	1 year

☒ means with testing used ;
☐ means without testing used
Note: N.C.R. = No Calibration Request.

For Radiated Emissions
Test Period: Dec. 08, 2023 ~ Mar. 26, 2024
Testing Engineer: Hung Chou, Eason Lee

Test Site		96603-BD				
Radiation test sites		Semi Anechoic Room				
Use	Equipment	Manufacturer	Model Number	Serial Number	Cal. Date	Cal. Period
☒	Coaxial Cable	Titan	T0710AT327A10A100	J11005	Aug. 10, 2023	1 year
☒	Coaxial Cable	Titan	T0710AT327A10A900	J11004	Aug. 10, 2023	1 year
☒	Coaxial Cable	Titan	CFD400NL-LW	001	Aug. 10, 2023	1 year
☐	Bluetooth Tester	R&S	CBT	100350	Mar. 20, 2023	2 years
☐	Wireless Connectivity Tester	R&S	CMW270	102208	Jun. 05, 2023	1 year
☐	Power Supply	KEITHLEY	2303	4045290	Jan. 06, 2023 Jan. 04, 2024	1 year
☒	Software	EZ EMC	1.1.4.4	N/A	N.C.R.	---

☒ means with testing used ;
☐ means without testing used
Note: N.C.R. = No Calibration Request.

4 Measurement Procedure

4.1. AC Power Line Conducted Emission Measurement

■ **Limit**

Frequency (MHz)	Quasi-peak	Average
0.15 - 0.5	66 to 56	56 to 46
0.50 - 5.0	56	46
5.0 - 30.0	60	50

■ **Test Setup**

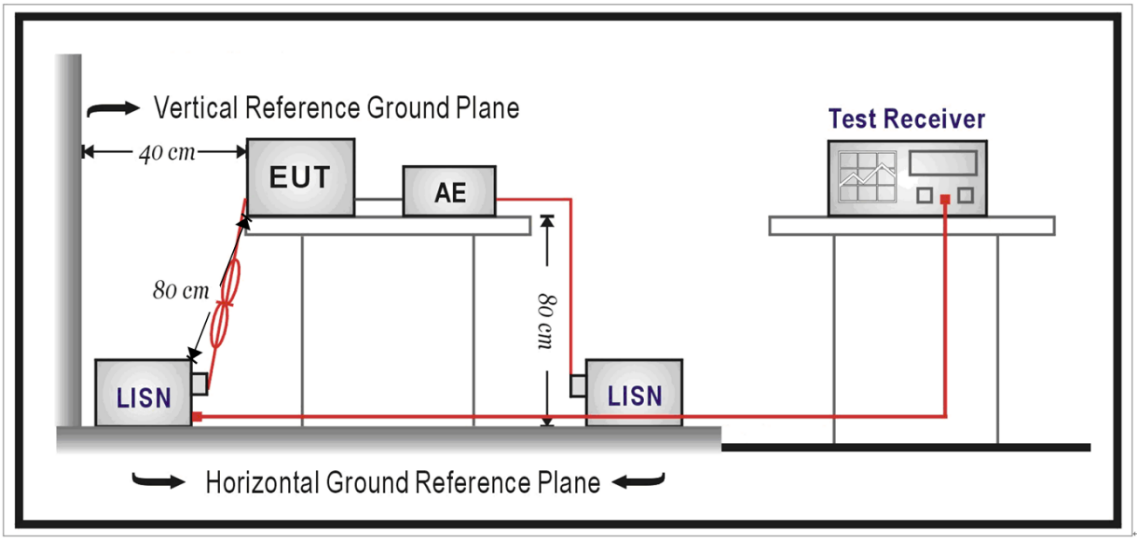

■ Test Procedure

The EUT and simulators are connected to the main power through a line impedance stabilization network (L.I.S.N.). This provides a 50 Ω// 50 uH coupling impedance for the measuring equipment. The peripheral devices are also connected to the main power through a LISN that provides a 50 Ω// 50 uH coupling impedance with 50 ohm termination.

Tabletop device shall be placed on a non-conducting platform, of nominal size 1 m by 1.5 m, raised 80 cm above the reference ground plane. The wall of screened room shall be located 40 cm to the rear of the EUT. Other surfaces of tabletop or floor standing EUT shall be at least 80 cm from any other ground conducting surface including one or more LISNs. For floor-standing device shall be placed under the EUT with a 12 mm insulating material.

Conducted emissions were investigated over the frequency range from 0.15 MHz to 30 MHz using a resolution bandwidth of 9 kHz. The equipment under test (EUT) shall be meet the limits in section 4.1, as applicable, including the average limit and the quasi-peak limit when using respectively, an average detector and quasi-peak detector measured in accordance with the methods described of related standard. When all of peak value were complied with quasi-peak and average limit from 150 kHz to 30 MHz then quasi-peak and average measurement was unnecessary.

The AMN shall be placed 0.8 m from the boundary of the unit under test and bonded to a ground reference plane for AMNs mounted on top of the ground reference plane. This distance is between the closest points of the AMN and the EUT. All other units of the EUT and associated equipment shall be at least 0.8 m from the AMN. If the mains power cable is longer than 1 m then the cable shall be folded back and forth at the centre of the lead to form a bundle no longer than 0.4 m. All of interconnecting cables that hang closer than 40 cm to the ground plane shall be folded back and forth in the center forming a bundle 30 cm to 40 cm long. All of EUT and AE shall be separate place more than 0.1 m. All 50 Ω ports of the LISN shall be resistively terminated into 50 Ω loads when not connected to the measuring instrument.

If the reading of the measuring receiver shows fluctuations close to the limit, the reading shall be observed for at least 15 s at each measurement frequency; the higher reading shall be recorded with the exception of any brief isolated high reading which shall be ignored.

4.2. Radiated Emission Measurement

■ Limit

According to §15.209(a), except as provided elsewhere in this subpart, the emissions from an intentional radiator shall not exceed the field strength levels specified in the following table:

Frequency (MHz)	Field Strength (μV/m at meter)	Measurement Distance (meters)
0.009 – 0.490	2400 / F (kHz)	300
0.490 – 1.705	24000 / F (kHz)	30
1.705 – 30.0	30	30
30 - 88	100**	3
88-216	150**	3
216-960	200**	3
Above 960	500	3

** Except as provided in paragraph (g), fundamental emissions from intentional radiators operating under this Section shall not be located in the frequency bands 54-72 MHz, 76-88 MHz, 174-216 MHz or 470-806 MHz. However, operation within these frequency bands is permitted under other sections of this Part, e.g., Sections 15.231 and 15.241.

■ Setup

9 kHz ~ 30 MHz

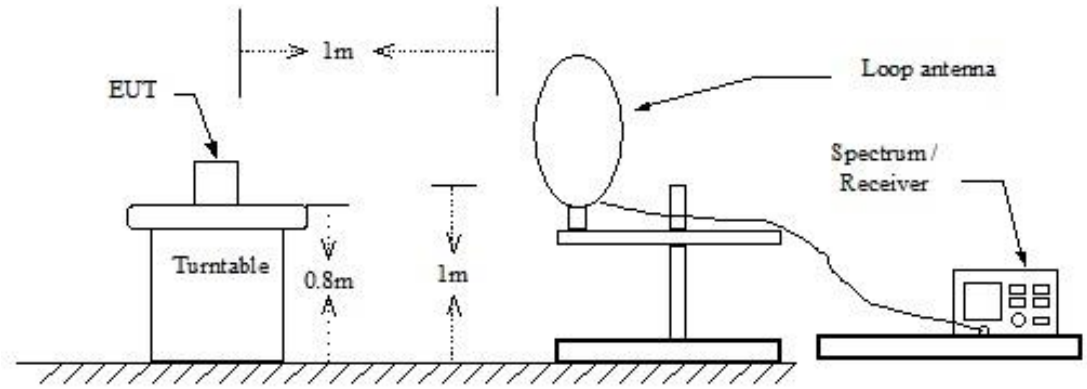

Below 1 GHz

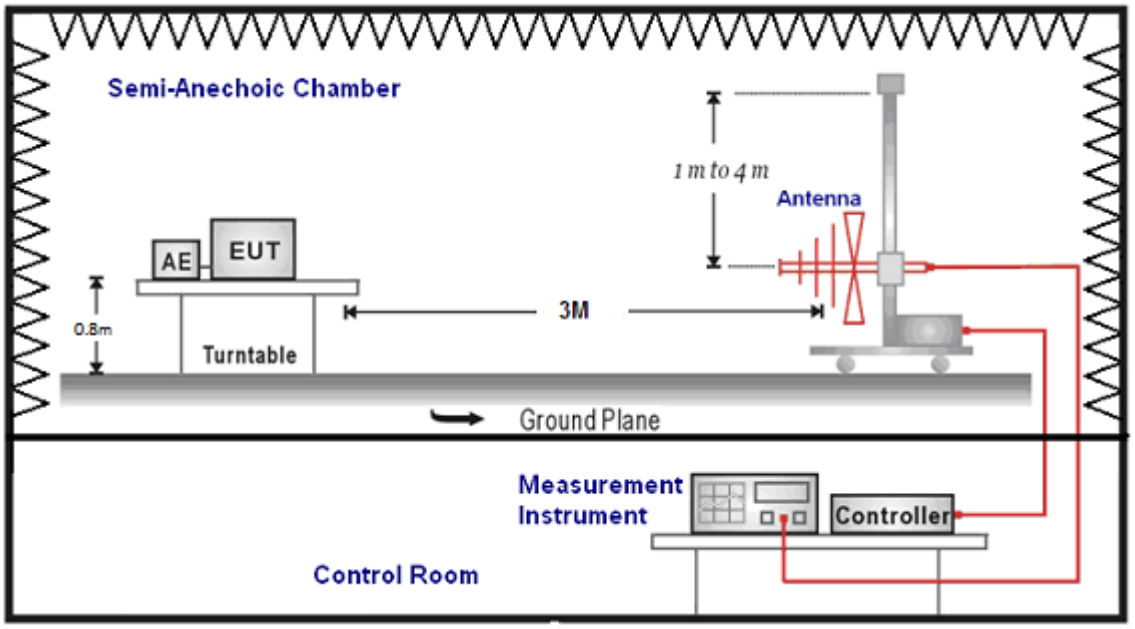

Above 1 GHz

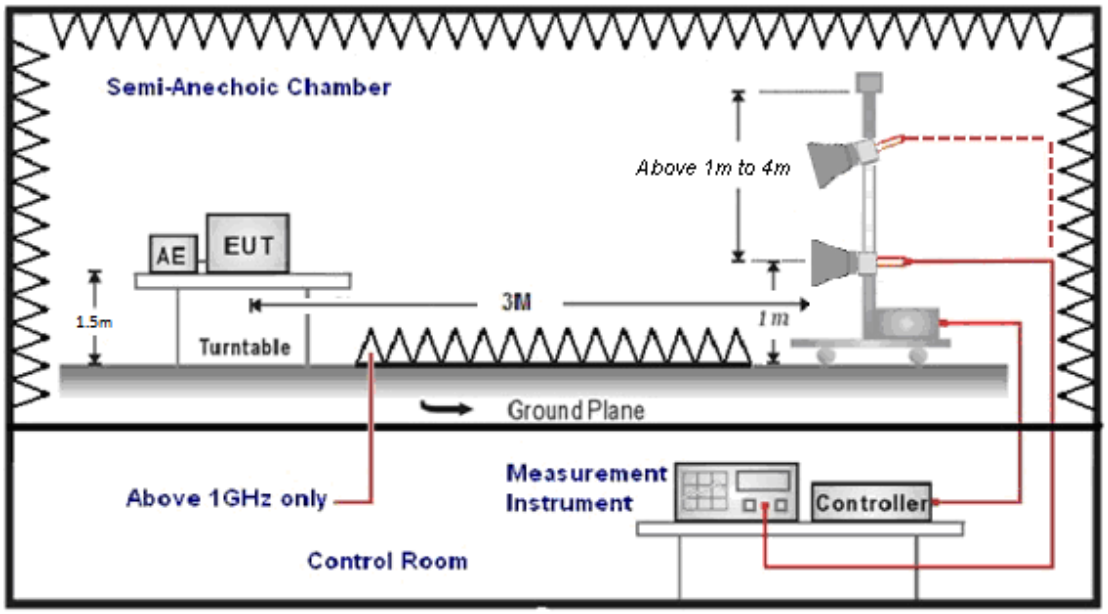
Semi-Anechoic Chamber
Above 1m to 4m
AE
EUT
1.5m
3M
1 m
Turntable
Ground Plane
Above 1GHz only
Measurement
Instrument
Controller
Control Room

■ Test Procedure

Final radiation measurements were made on a three-meter, Semi Anechoic Chamber. The EUT system was placed on a nonconductive turntable which is 0.8 or 1.5 meters height, top surface 1.0 x 1.5 meter. The spectrum was examined from 250 MHz to 2.5 GHz in order to cover the whole spectrum below 10th harmonic which could generate from the EUT. During the test, EUT was set to transmit continuously & Measurements spectrum range from 9 kHz to 26.5 GHz is investigated.

For measurements below 30 MHz the resolution bandwidth is set to 10 kHz for peak detection measurements or 9 kHz for quasi-peak detection measurements. The video bandwidth is 3 times of the resolution bandwidth.

For measurements below 1 GHz the resolution bandwidth is set to 100 kHz for peak detection measurements or 120 kHz for quasi-peak detection measurements. Peak detection is used unless otherwise noted as quasi-peak.

For measurements above 1 GHz the resolution bandwidth is set to 1 MHz, and then the video bandwidth is set to 3 MHz for peak measurements and 10 Hz for average measurements when Duty cycle >98 % / 1/T for average measurements when Duty cycle <98 %. A nonconductive material surrounded the EUT to supporting the EUT for standing on tree orthogonal planes. At each condition, the EUT was rotated 360 degrees, and the antenna was raised and lowered from one to four meters to find the maximum emission levels. Measurements were taken using both horizontal and vertical antenna polarization.

SCHWARZBECK MESS-ELEKTRONIK Biconilog Antenna at 3 Meter and the SCHWARZBECK Double Ridged Guide Antenna was used in frequencies 1 – 26.5 GHz at a distance of 1 meter. All test results were extrapolated to equivalent signal at 3 meters utilizing an inverse linear distance extrapolation Factor (20 dB/decade).

For testing above 1 GHz, the emission level of the EUT in peak mode was 20 dB lower than average limit (that means the emission level in peak mode also complies with the limit in average mode), then testing will be stopped and peak values of EUT will be reported, otherwise, the emissions will be measured in average mode again and reported.

Appropriate preamplifiers were used for improving sensitivity and precautions were taken to avoid overloading or desensitizing the spectrum analyzer. No post – detector video filters were used in the test.

The spectrum analyzer's 6 dB bandwidth was set to 1 MHz, and the analyzer was operated in the peak detection mode, for frequencies both below and up 1 GHz. The average levels were obtained by subtracting the duty cycle correction factor from the peak readings.

The following procedures were used to convert the emission levels measured in decibels referenced to 1 microvolt (dBuV) into field intensity in micro volts pre meter (uV/m).

The actual field intensity in decibels referenced to 1 microvolt in to field intensity in micro colts per meter (dBuV/m).

The actual field is intensity in referenced to 1 microvolt per meter (dBuV/m) is determined by algebraically adding the measured reading in dBuV, the antenna factor (dB), and cable loss (dB) and Subtracting the gain of preamplifier (dB) is auto calculate in spectrum analyzer.

(1) Amplitude (dBuV/m) = FI (dBuV) +AF (dBuV) +CL (dBuV)-Gain (dB)
FI= Reading of the field intensity.
AF= Antenna factor.
CL= Cable loss.
P.S Amplitude is auto calculate in spectrum analyzer.

(2) Actual Amplitude (dBuV/m) = Amplitude (dBuV)-Dis(dB)
The FCC specified emission limits were calculated according the EUT operating frequency and by following linear interpolation equations:
(a) For fundamental frequency : Transmitter Output < +30 dBm
(b) For spurious frequency : Spurious emission limits = fundamental emission limit /10

Data of measurement within this frequency range without mark in the table above means the reading of emissions are attenuated more than 20 dB below the permissible limits or the field strength is too small to be measured.

4.3. Maximum Conducted Output Power Measurement

■ Limit

For systems using digital modulation in the 2400-2483.5 MHz, the limit for peak output power is 30 dBm.

■ Test Setup

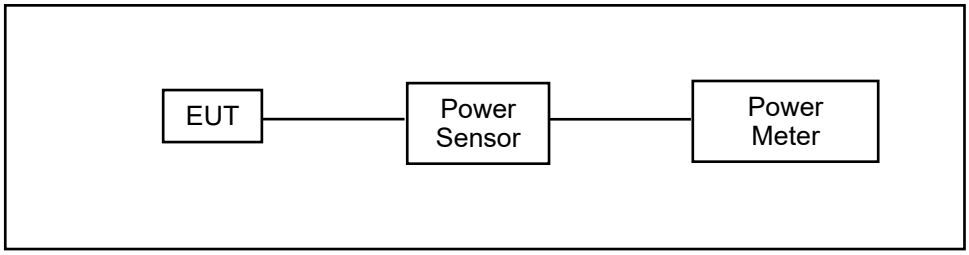

■ Test Procedure

T he tests below are run with the EUT's transmitter set at high power in Transmit mode. The EUT is needed to force selection of output power level and channel number. While testing, EUT was set to transmit continuously. Remove the Subjective device's antenna and connect the RF output port to power sensor.

4.4. 6 dB RF Bandwidth Measurement

■ Limit

6 dB RF Bandwidth: Systems using digital modulation techniques may operate in the 2400–2483.5 MHz bands. The minimum 6 dB band-width shall be at least 500 kHz.
99 % Occupied Bandwidth: N/A

■ Test Setup

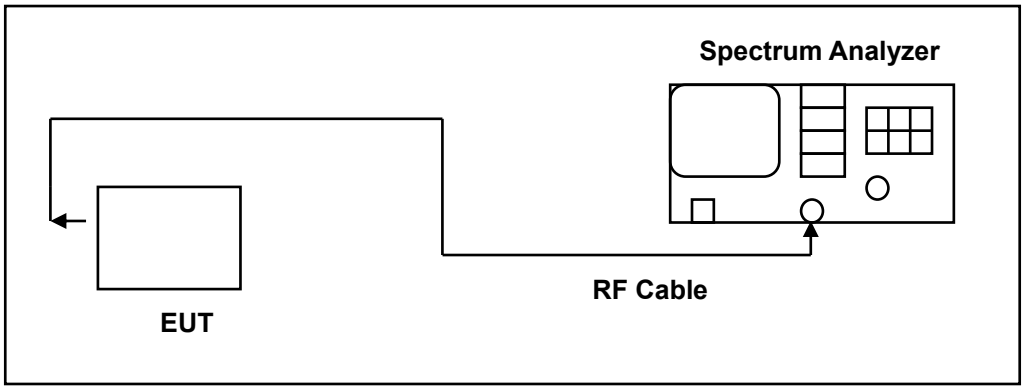

■ Test Procedure

The EUT tested to DTS test procedure of ANSI C63.10:2013 section 11.8.2 option2 for compliance to FCC 47CFR 15.247 requirements.
6 dB RF Bandwidth: The antenna port of the EUT was connected to the input of a spectrum analyzer. Analyzer RBW was set to 100 kHz. For each RF output channel investigated, the spectrum analyzer center frequency was set to the channel carrier. A peak output reading was taken, a DISPLAY line was drawn 6 dB lower than peak level. The 6 dB bandwidth was determined from where the channel output spectrum intersected the display line.
The test was performed at 3 channels (Channel low, middle, high)

4.5. Maximum Power Density Measurement

■ Limit

For digitally modulated systems, the power spectral density conducted from the intentional radiator to the antenna shall not be greater than 8 dBm in any 3 kHz band during any time interval of continuous transmission.

■ Test Setup

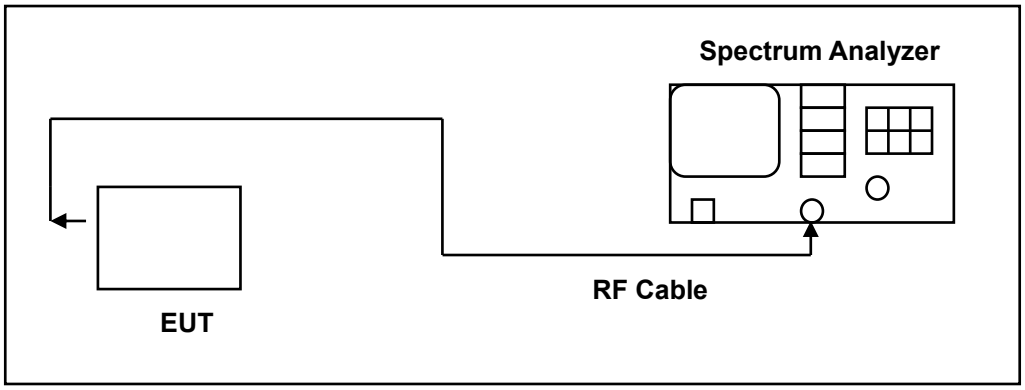

■ Test Procedure

The EUT tested to DTS test procedure of ANSI C63.10:2013 section 11.10.2 for compliance to FCC 47CFR 15.247 requirements.

1. Set analyzer center frequency to DTS channel center frequency.
2. Set the span to 1.5 times the DTS bandwidth.
3. Set the RBW to: 3 kHz ≤ RBW ≤ 100 kHz.
4. Set the VBW ≥ 3 × RBW.
5. Detector = peak.
6. Sweep time = auto couple.
7. Trace mode = max hold.
8. Allow trace to fully stabilize.
9. Use the peak marker function to determine the maximum amplitude level within the RBW.
10. If measured value exceeds limit, reduce RBW (no less than 3 kHz) and repeat.

4.6. Out of Band Conducted Emissions Measurement

■ Limit

In any 100 kHz bandwidth outside the frequency band in which the spread spectrum or digitally modulated intentional radiator is operating, the radio frequency power that is produced by the intentional radiator shall be at least 20 dB below that in the 100 kHz bandwidth within the band that contains the highest level of the desired power

■ Test Setup

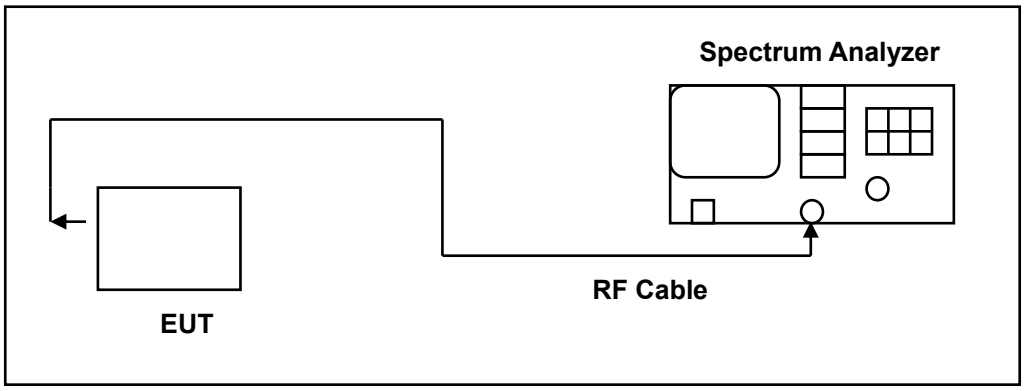

■ Test Procedure

In any 100 kHz bandwidth outside the EUT pass band, the RF power produced by the modulation products of the spreading sequence, the information sequence, and the carrier frequency shall be at least 20 dB below that of the maximum in-band 100 kHz emission, antenna output of the EUT was coupled directly to spectrum analyzer; if an external attenuator and/or cable was used, these losses are compensated for with the analyzer OFFSET function.
All other types of emissions from the EUT shall meet the general limits for radiated frequencies outside the pass band.
The test was performed at 3 channels.

4.7. Antenna Measurement

■ Limit

For intentional device, according to 15.203, an intentional radiator shall be designed to ensure that no antenna other than that furnished by the responsible party shall be used with the device.

And According to 15.247 (b), if transmitting antennas of directional gain greater than 6 dBi are used, the power shall be reduced by the amount in dB that the directional gain of the antenna exceeds 6 dBi.

■ Antenna Connector Construction

See section 2 – antenna information.

5 Test Results

5.1. Conducted Emission

Standard:	Part 15C	Line:	L1
Test item:	Conducted Emission	Power:	AC 120 V/60 Hz
Mode:	SRD		
Frequency:	920.7 MHz		
Description:			

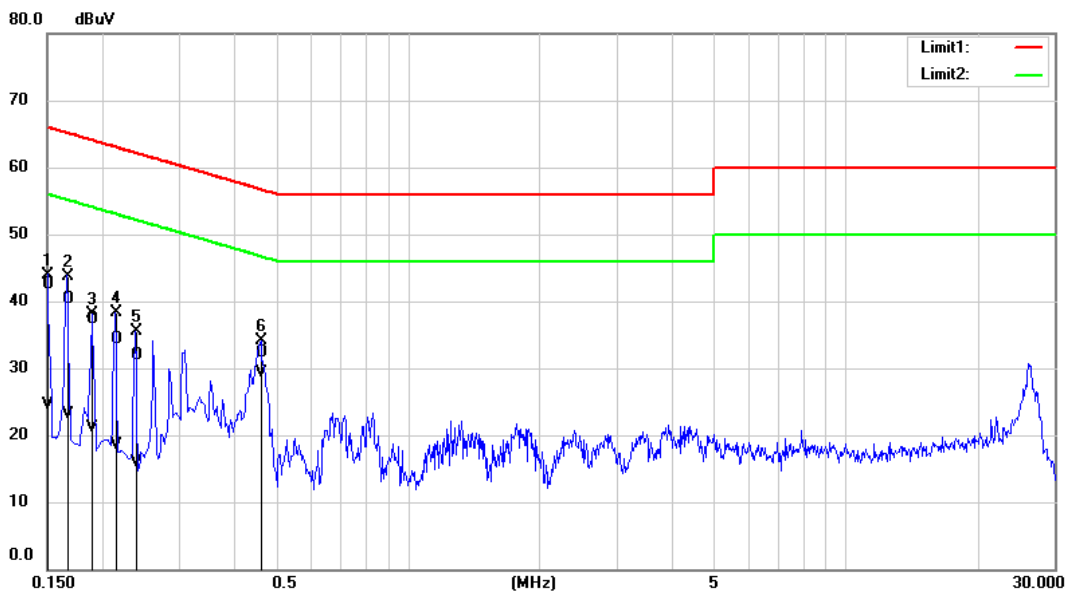

No.	Frequency (MHz)	QP reading (dBuV)	AVG reading (dBuV)	Correction factor (dB)	QP result (dBuV)	AVG result (dBuV)	QP limit (dBuV)	AVG limit (dBuV)	QP margin (dB)	AVG margin (dB)	Remark
1	0.1500	32.89	14.74	9.68	42.57	24.42	66.00	56.00	-23.43	-31.58	Pass
2	0.1660	30.61	13.51	9.68	40.29	23.19	65.16	55.16	-24.87	-31.97	Pass
3	0.1900	27.62	11.39	9.69	37.31	21.08	64.04	54.04	-26.73	-32.96	Pass
4	0.2140	24.71	8.79	9.69	34.40	18.48	63.05	53.05	-28.65	-34.57	Pass
5	0.2380	22.25	6.21	9.69	31.94	15.90	62.17	52.17	-30.23	-36.27	Pass
6	0.4620	22.59	19.65	9.70	32.29	29.35	56.66	46.66	-24.37	-17.31	Pass

Note:1.Result (dBuV) = Correction factor (dB) + Reading(dBuV).

2. Correction factor (dB) = Cable loss (dB) + L.I.S.N. factor (dB).

Standard:	Part 15C	Line:	N
Test item:	Conducted Emission	Power:	AC 120 V/60 Hz
Mode:	SRD		
Frequency:	920.7 MHz		
Description:			

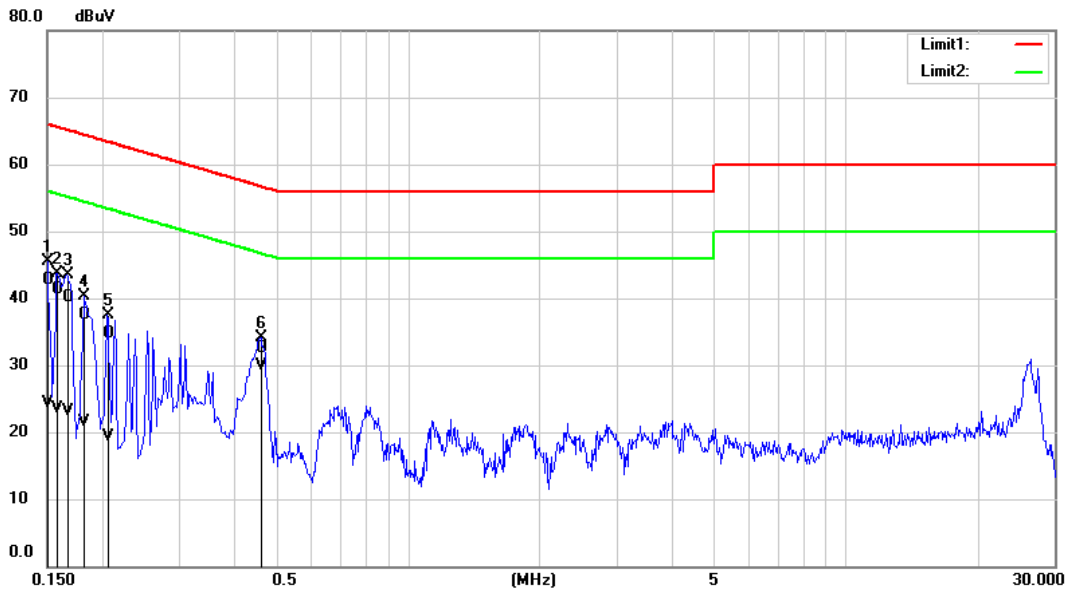

No.	Frequency (MHz)	QP reading (dBuV)	AVG reading (dBuV)	Correction factor (dB)	QP result (dBuV)	AVG result (dBuV)	QP limit (dBuV)	AVG limit (dBuV)	QP margin (dB)	AVG margin (dB)	Remark
1	0.1500	33.05	14.61	9.68	42.73	24.29	66.00	56.00	-23.27	-31.71	Pass
2	0.1580	31.65	13.92	9.68	41.33	23.60	65.57	55.57	-24.24	-31.97	Pass
3	0.1660	30.50	13.47	9.68	40.18	23.15	65.16	55.16	-24.98	-32.01	Pass
4	0.1820	27.92	11.77	9.68	37.60	21.45	64.39	54.39	-26.79	-32.94	Pass
5	0.2060	25.01	9.66	9.68	34.69	19.34	63.37	53.37	-28.68	-34.03	Pass
6	0.4620	22.77	20.23	9.68	32.45	29.91	56.66	46.66	-24.21	-16.75	Pass

Note: 1. Result (dBuV) = Correction factor (dB) + Reading(dBuV).

2. Correction factor (dB) = Cable loss (dB) + L.I.S.N. factor (dB).

5.2. Radiated Emission Measurement

Below 1 GHz

Standard:	Part 15C	Test Distance:	3 m
Test item:	Radiated Emission		
Mode:	SRD		
Frequency:	920.7 MHz		
Ant.Polar.:	Horizontal		

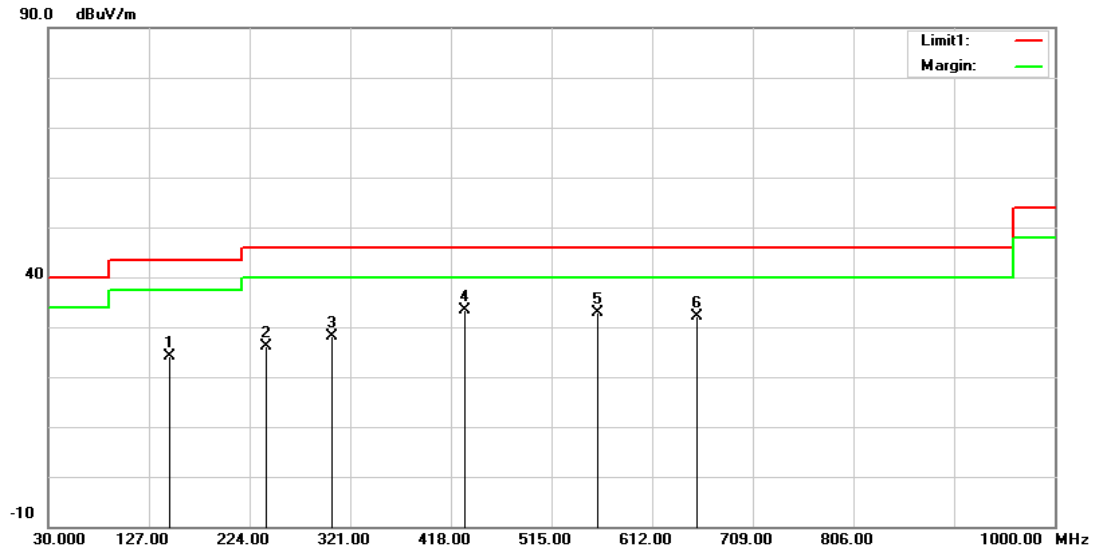

No.	Frequency (MHz)	Reading (dBuV)	Correct Factor (dB/m)	Result (dBuV/m)	Limit (dBuV/m)	Margin (dB)	Remark
1	147.3700	31.21	-7.09	24.12	43.50	-19.38	QP
2	240.4900	33.53	-7.32	26.21	46.00	-19.79	QP
3	303.5400	33.63	-5.62	28.01	46.00	-17.99	QP
4*	431.5800	35.89	-2.41	33.48	46.00	-12.52	QP
5	559.6200	33.26	-0.49	32.77	46.00	-13.23	QP
6	655.6500	30.63	1.52	32.15	46.00	-13.85	QP

Standard:	Part 15C	Test Distance:	3 m
Test item:	Radiated Emission		
Mode:	SRD		
Frequency:	920.7 MHz		
Ant.Polar.:	Vertical		

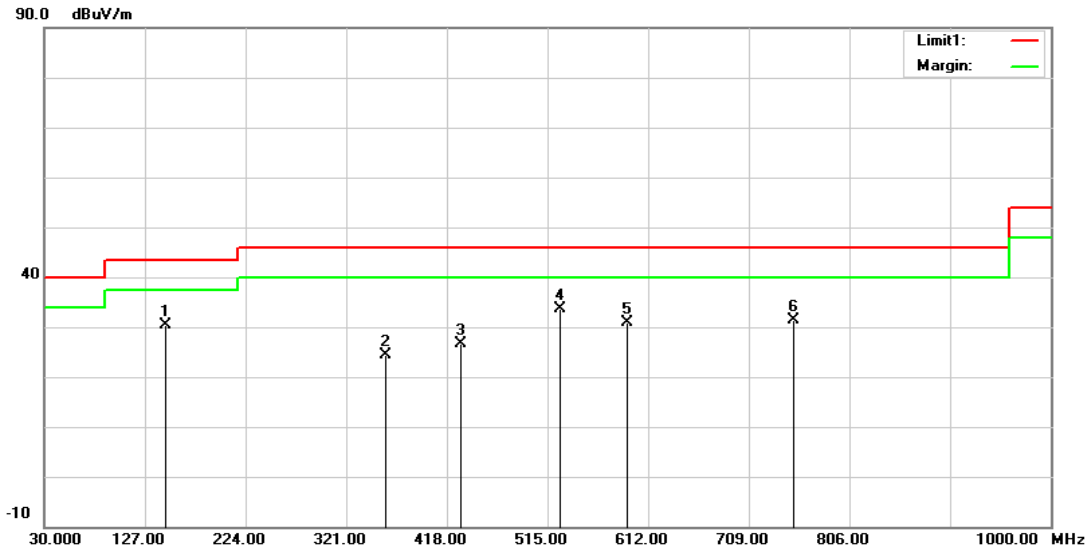

No.	Frequency (MHz)	Reading (dBuV)	Correct Factor (dB/m)	Result (dBuV/m)	Limit (dBuV/m)	Margin (dB)	Remark
1	147.3700	37.55	-7.09	30.46	43.50	-13.04	QP
2	358.8300	28.57	-4.28	24.29	46.00	-21.71	QP
3	431.5800	28.93	-2.41	26.52	46.00	-19.48	QP
4*	527.6100	34.88	-1.26	33.62	46.00	-12.38	QP
5	591.6300	30.59	0.40	30.99	46.00	-15.01	QP
6	751.6800	27.69	3.57	31.26	46.00	-14.74	QP

Harmonic

Above 1 GHz

Standard:	Part 15C	Test Site:	966 Chamber
Polarization:	Horizontal		
Test Mode:	SRD_920.7 MHz		
Remark:			

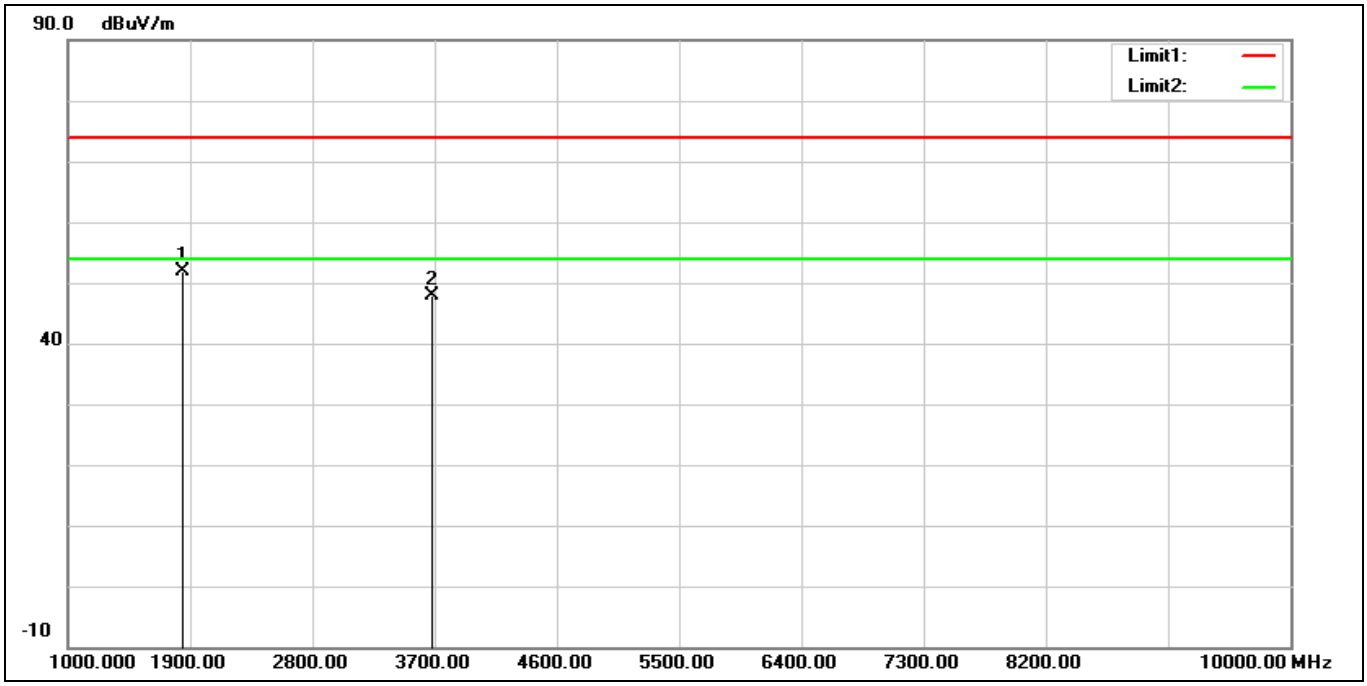

No.	Frequency (MHz)	Reading (dBuV)	Correction (dB/m)	Result (dBuV/m)	Limit (dBuV/m)	Margin (dB)	Remark
1*	1841.400	61.09	-9.22	51.87	74.00	-22.13	peak
2	3682.800	51.48	-3.57	47.91	74.00	-26.09	peak

Standard:	Part 15C	Test Site:	966 Chamber
Polarization:	Vertical		
Test Mode:	SRD_920.7 MHz		
Remark:			

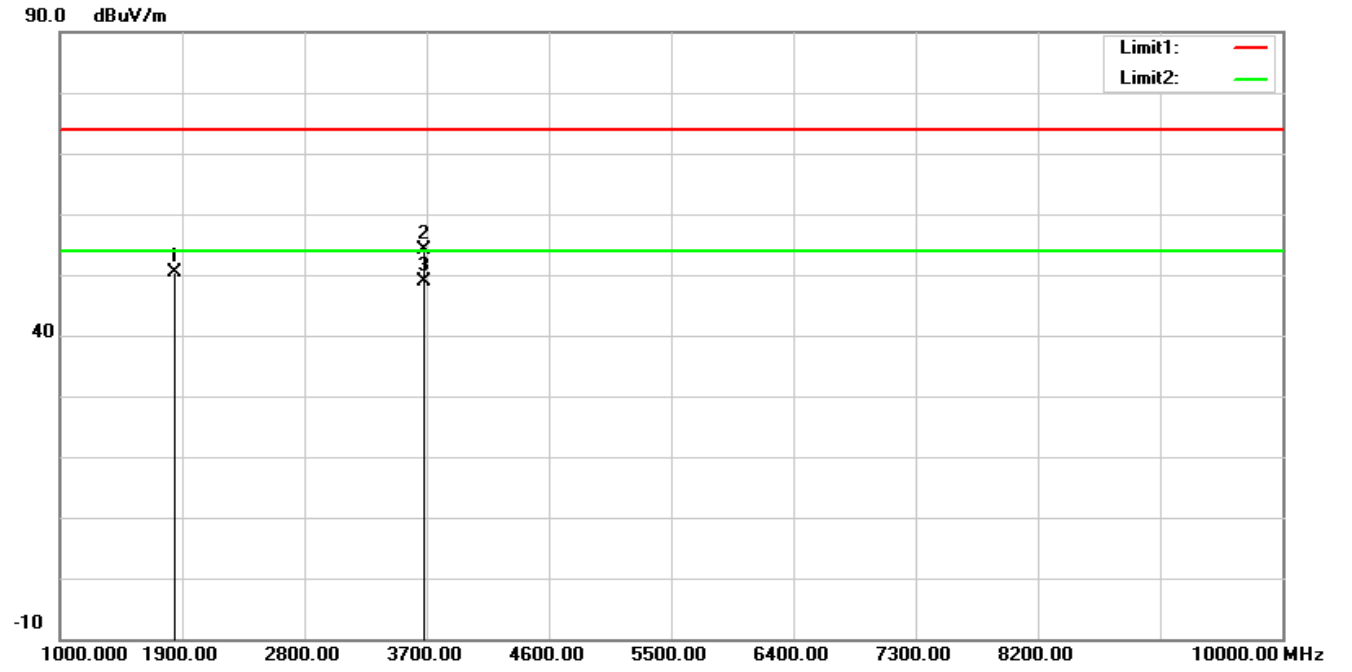

No.	Frequency (MHz)	Reading (dBuV)	Correction (dB/m)	Result (dBuV/m)	Limit (dBuV/m)	Margin (dB)	Remark
1	1841.400	59.62	-9.22	50.40	74.00	-23.60	peak
2	3682.800	57.69	-3.57	54.12	74.00	-19.88	peak
3*	3682.800	52.47	-3.57	48.90	54.00	-5.10	AVG

Standard:	Part 15C	Test Site:	966 Chamber
Polarization:	Horizontal		
Test Mode:	SRD_924.5 MHz		
Remark:			

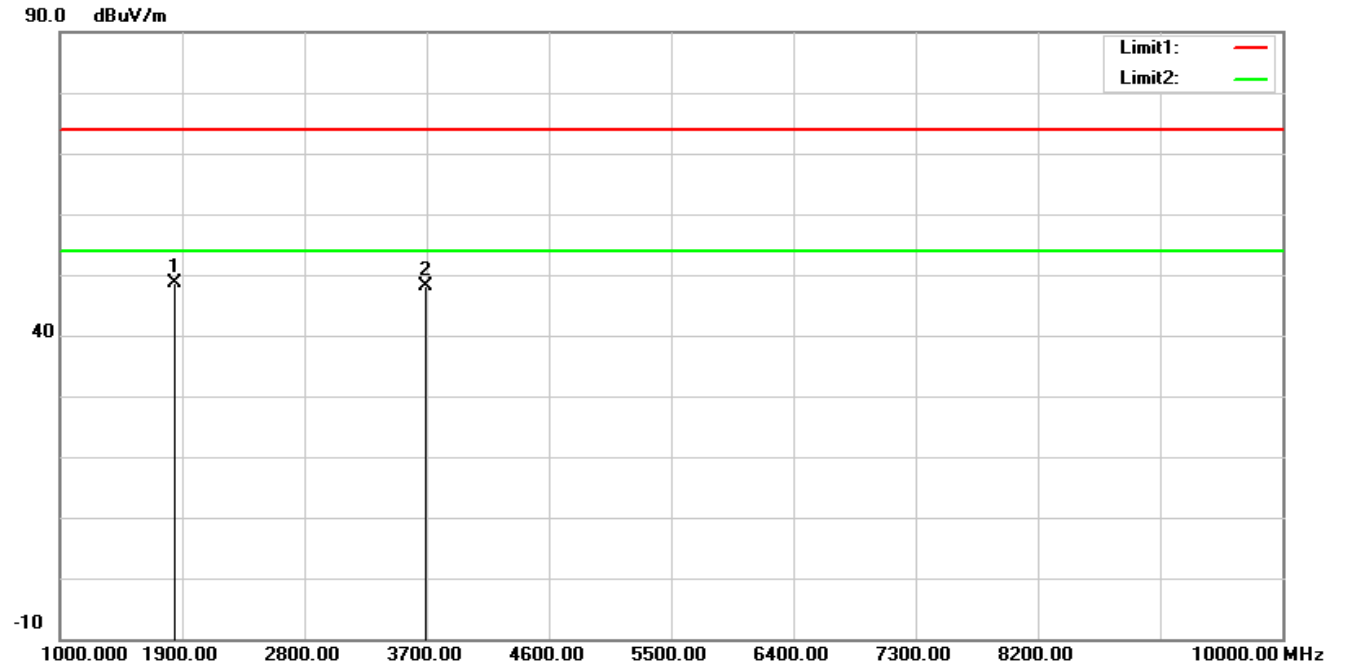

No.	Frequency (MHz)	Reading (dBuV)	Correction (dB/m)	Result (dBuV/m)	Limit (dBuV/m)	Margin (dB)	Remark
1*	1849.000	57.60	-9.09	48.51	74.00	-25.49	peak
2	3698.000	51.65	-3.64	48.01	74.00	-25.99	peak

Standard:	Part 15C	Test Site:	966 Chamber
Polarization:	Vertical		
Test Mode:	SRD_924.5 MHz		
Remark:			

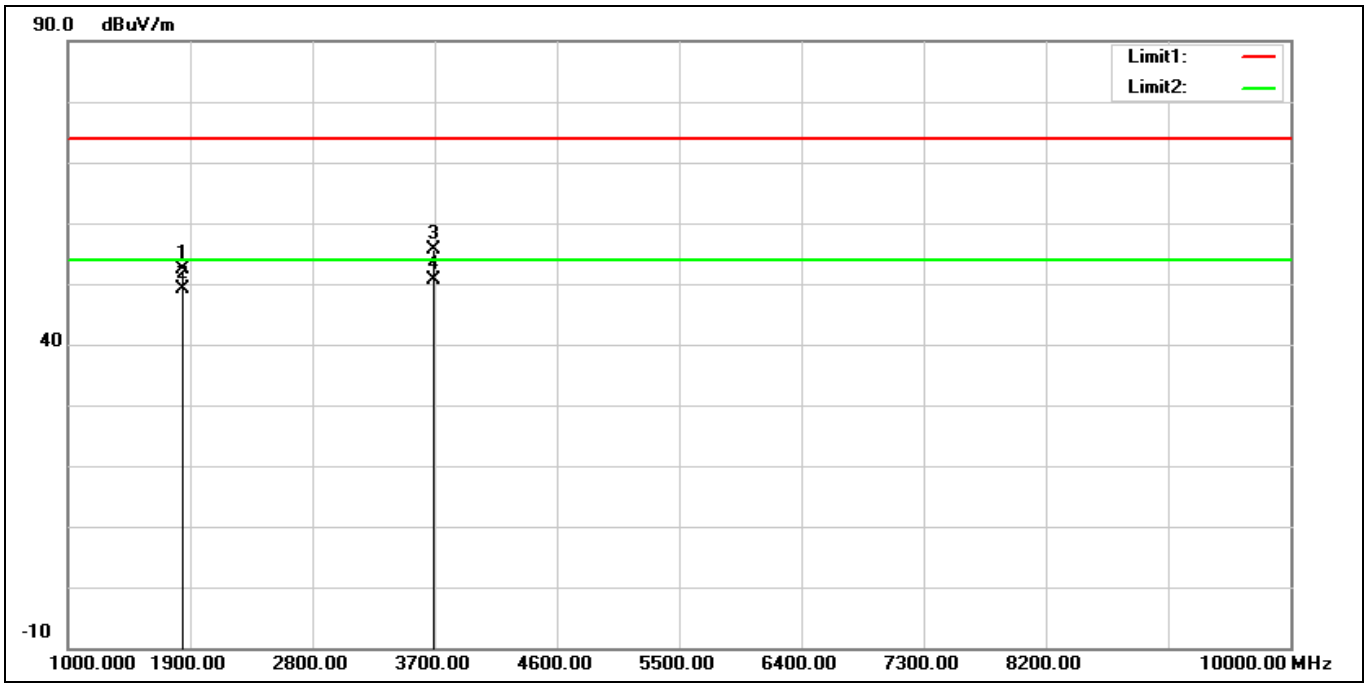

No.	Frequency (MHz)	Reading (dBuV)	Correction (dB/m)	Result (dBuV/m)	Limit (dBuV/m)	Margin (dB)	Remark
1	1849.000	61.53	-9.09	52.44	74.00	-21.56	peak
2	1849.000	58.14	-9.09	49.05	54.00	-4.95	AVG
3	3698.000	59.37	-3.64	55.73	74.00	-18.27	peak
4*	3698.000	54.15	-3.64	50.51	54.00	-3.49	AVG

Band Edge

Standard:	Part 15C	Test Site:	966 Chamber
Polarization:	Horizontal		
Test Mode:	SRD_920.7 MHz		
Remark:			

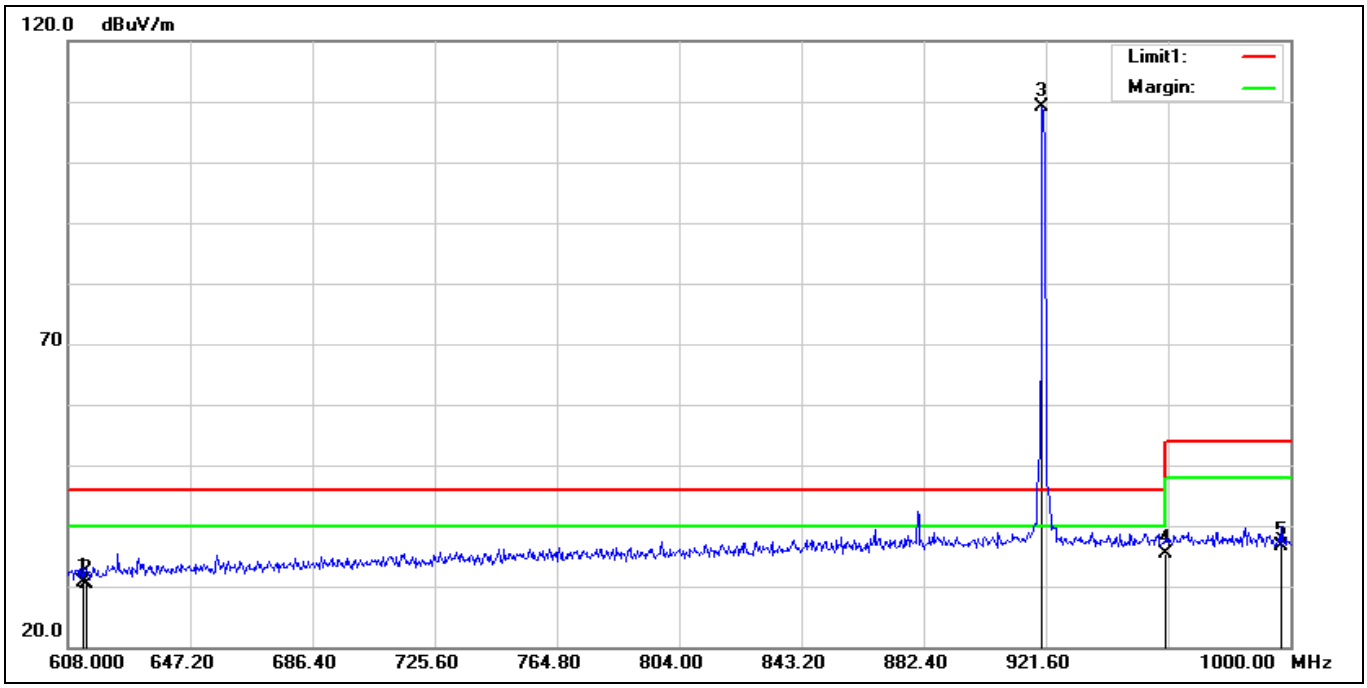

No.	Frequency (MHz)	Reading (dBuV)	Correction (dB/m)	Result (dBuV/m)	Limit (dBuV/m)	Margin (dB)	Remark
1	612.7040	29.71	0.83	30.54	46.00	-15.46	QP
2	614.0000	29.46	0.85	30.31	46.00	-15.69	QP
3*	920.4240	102.96	6.12	109.08	46.00	63.08	peak
4	960.0000	28.93	6.56	35.49	46.00	-10.51	QP
5	997.2560	30.12	6.62	36.74	54.00	-17.26	QP

Standard:	Part 15C	Test Site:	966 Chamber
Polarization:	Vertical		
Test Mode:	SRD_920.7 MHz		
Remark:			

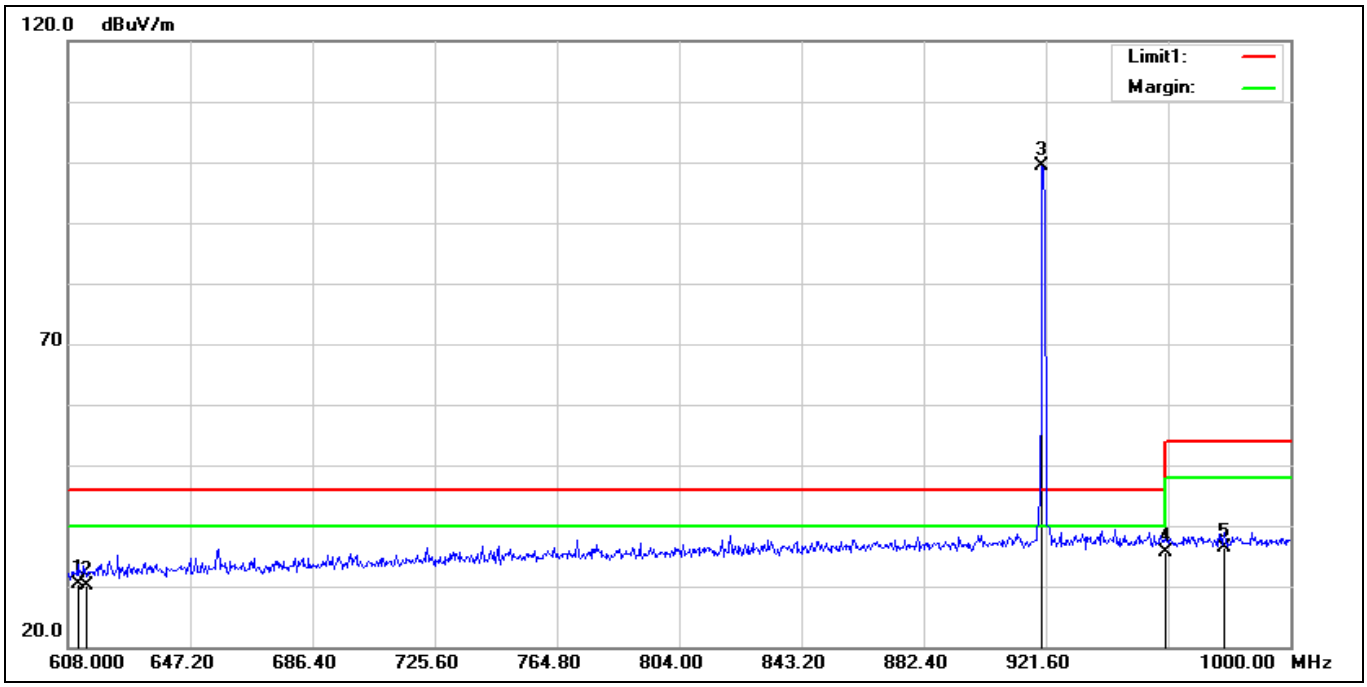

No.	Frequency (MHz)	Reading (dBuV)	Correction (dB/m)	Result (dBuV/m)	Limit (dBuV/m)	Margin (dB)	Remark
1	611.1360	29.47	0.80	30.27	46.00	-15.73	QP
2	614.0000	29.24	0.85	30.09	46.00	-15.91	QP
3*	920.4240	93.26	6.12	99.38	46.00	53.38	peak
4	960.0000	29.08	6.56	35.64	46.00	-10.36	QP
5	978.8320	29.69	6.59	36.28	54.00	-17.72	QP

Standard:	Part 15C	Test Site:	966 Chamber
Polarization:	Horizontal		
Test Mode:	SRD_924.5 MHz		
Remark:			

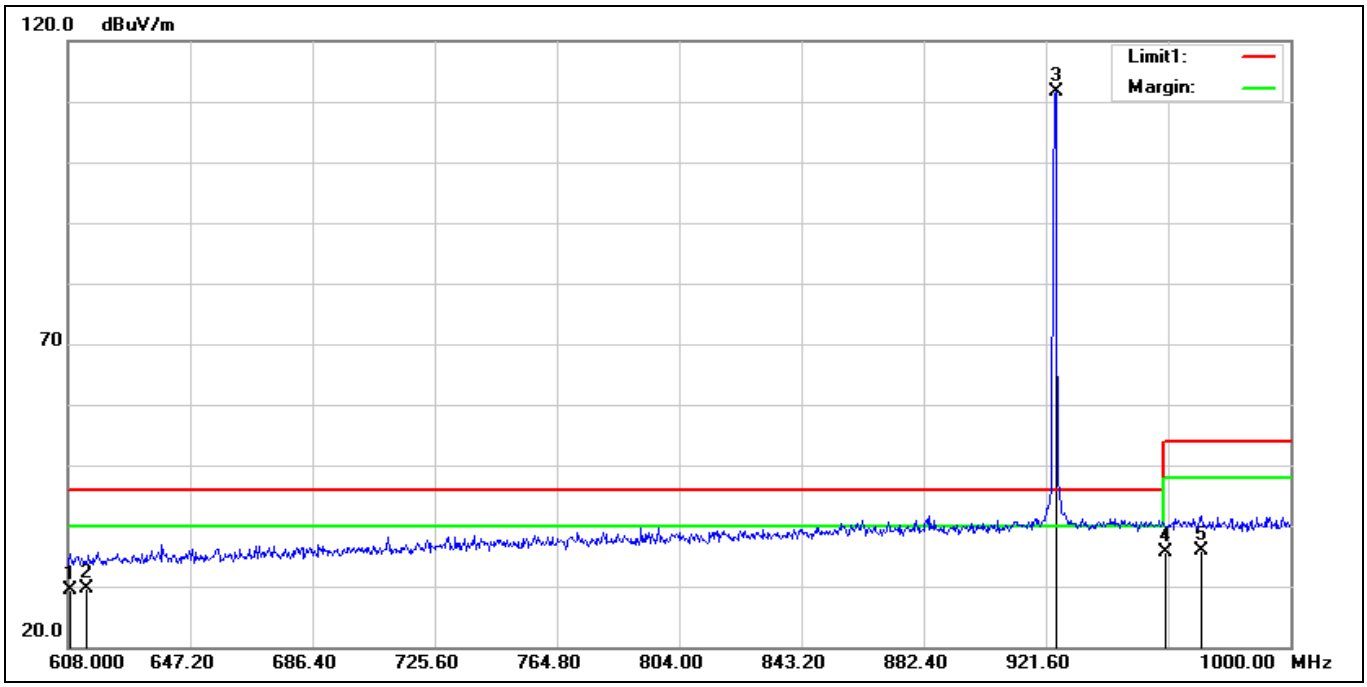

No.	Frequency (MHz)	Reading (dBuV)	Correction (dB/m)	Result (dBuV/m)	Limit (dBuV/m)	Margin (dB)	Remark
1	608.7840	28.69	0.77	29.46	46.00	-16.54	QP
2	614.0000	28.72	0.85	29.57	46.00	-16.43	QP
3*	924.7360	105.35	6.19	111.54	46.00	65.54	peak
4	960.0000	29.06	6.56	35.62	46.00	-10.38	QP
5	971.3840	29.29	6.58	35.87	54.00	-18.13	QP

Standard:	Part 15C	Test Site:	966 Chamber
Polarization:	Vertical		
Test Mode:	SRD_924.5 MHz		
Remark:			

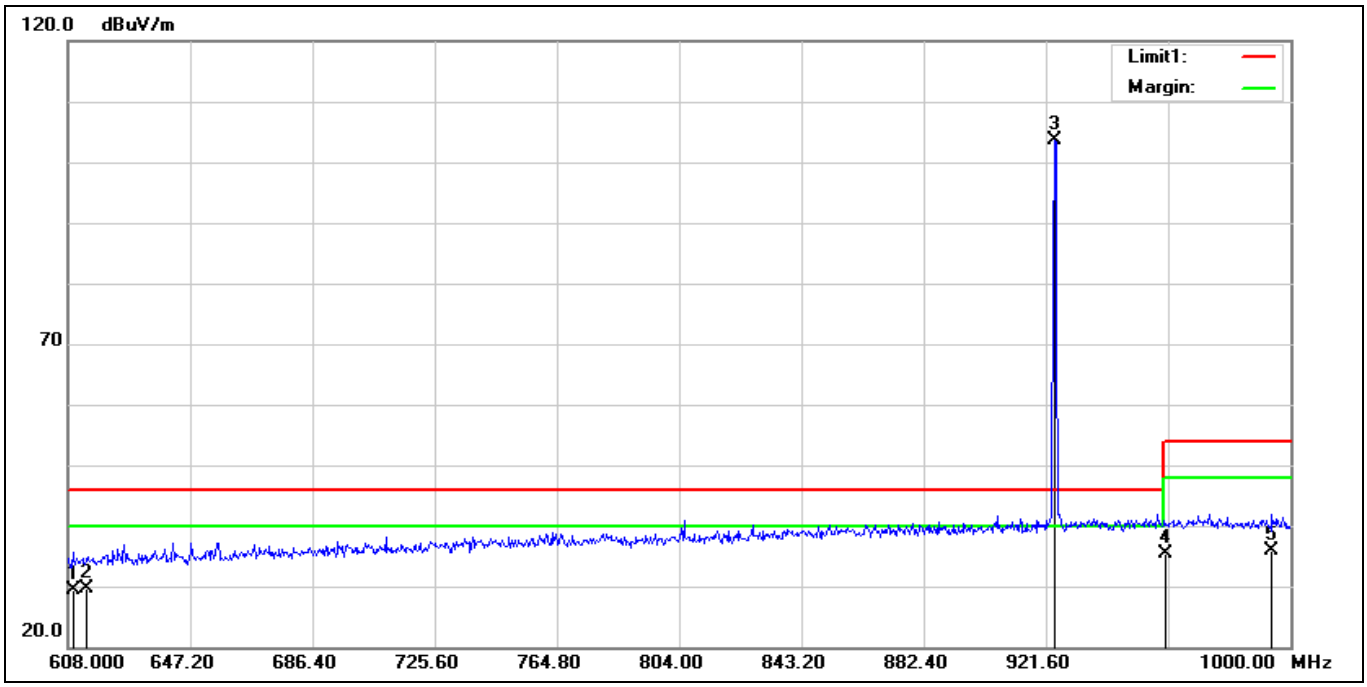

No.	Frequency (MHz)	Reading (dBuV)	Correction (dB/m)	Result (dBuV/m)	Limit (dBuV/m)	Margin (dB)	Remark
1	609.5680	28.63	0.79	29.42	46.00	-16.58	QP
2	614.0000	28.66	0.85	29.51	46.00	-16.49	QP
3*	924.3440	97.33	6.18	103.51	46.00	57.51	peak
4	960.0000	28.92	6.56	35.48	46.00	-10.52	QP
5	994.1200	29.29	6.62	35.91	54.00	-18.09	QP

---END---