LC-203/BLC-203 and LC-204/BLC-204
DUAL TECHNOLOGY DETECTORS

2012/19/EU

Johnson Controls

1. INTRODUCTION

The new line of **LC-203/BLC-203** and **LC-204/BLC-204** detectors is the best choice for residential and commercial security installations: BLC-203 and BLC-204 are not UL/ULC listed. They only use digital PIRs which bypass the conversion that usually must be done with traditional detectors where an analog PIR is amplified and converted to digital. The FULLY digital technology helps the detector more accurately detect intrusions and not be affected by alterations in white light, ultraviolet light, temperature and air movement caused by heating/cooling systems. It is also fully immune to radiated and conducted electromagnetic interference. LC-203/BLC-203 and LC-204/BLC-204 detectors are equipped with lenses designed by Johnson Controls and are manufactured by Fresnel Technologies, Inc. **LODIFF®** optic creation technology combined with **POLY IR®** materials make it a product of the highest quality and efficiency. LC-203/BLC-203 and LC-204/BLC-204 detectors are pet immune (feature not evaluated by UL/ULC) and have a 15 m range and a 100-degree detection range. LC-203/BLC-203 includes mask detection.

White Light Protection

The detector digitally filters white light components.

High RFI Protection

The detector has very high RFI immunity due to the complete lack of traditional amplifiers.

POLY IR®4 Plastic Material for Detection Stability

POLY IR® lens material. This materials offers a better combination of transmittance, environmental stability and color than any other polymer on the market. Materials are available for the 8-14 micron infrared region. LODIFF® and POLY IR® are registered trademarks of Fresnel Technologies, Inc.

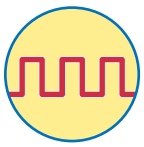

Fully Digital PIR

The detector has no analog components, and the fully digital PIR interfaces directly with the microprocessor.

Pet Immunity

Thanks to a new lens design and the digital analysis system, all of our detectors are immune to pets weighing up to 15 kg.

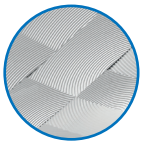

LODIFF® Fresnel Technology Lenses

This lens series is made by tiling LODIFF® lens pieces. These lenses offer significantly improved performance over the typical constant-bandwidth Fresnel lens.
LODIFF® and POLY IR® are registered trademarks of Fresnel Technologies, Inc.

2. INSTALLATION

- Using a thin screwdriver, loosen the bottom screw and open the cover (see Fig 1)
- Remove the board from the plastic base by removing the screw on the board (see Fig 2)
- Open the knockouts needed for mounting onto the wall (or use the non-certified IMQ joint)
- Open the knockouts for removal protection and fix the anchor to the wall (see Fig 2)
- Recommended height is 2.1 m
- Run the connection cables through the bottom of the container and out the top
- Connect the wires on the board as described below

- Fig 1 -

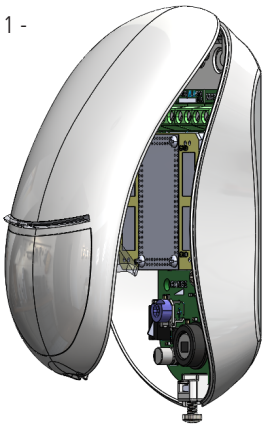

- Fig 2 -

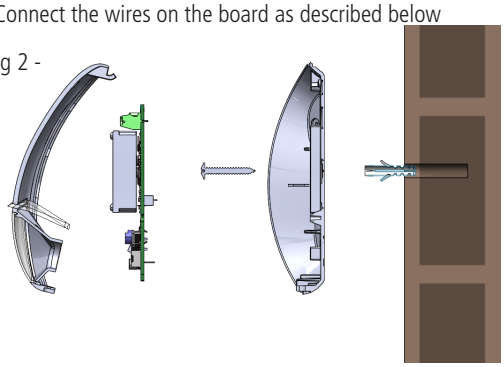

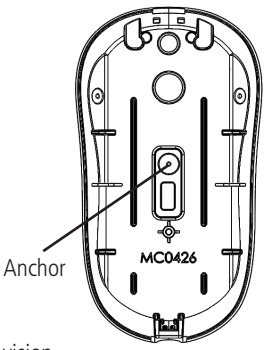

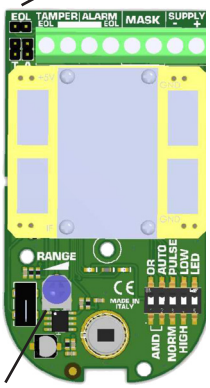

NOTE: Do not partially or completely cover the detector's field of vision
NOTE: the pet function is not IMQ certified

3. MEANING OF THE LEDS

During normal operation, the LED signals are:
GREEN LED = PIR Alarm; YELLOW LED = MW Alarm; RED LED = General Alarm (both PIR and MW)
- **LC-203/BLC-203:** In the case of detector masking, the LED corresponding to the masked technology will flash, and the MASK alarm contacts open

LC-203/BLC-203 VERSION

The LC-203/BLC-203 provides continuous detector self-testing, in the case of an anomaly lasting longer than 15 seconds, the detector will report:

- POWER SUPPLY ABOVE THE NOMINAL THRESHOLDS:

Alternating flashing of YELLOW and GREEN LEDs and opening of the MASK contact

- INFRARED SELF-TEST FAILURE

Flashing of GREEN LED and opening of the MASK contact

- MICROWAVE SELF-TEST FAILURE

Flashing of YELLOW LED and opening of the MASK contact

4. CONNECTION AND SETUP

Dip **LED** --> off = LED off - on = LED on*
Dip **HIGH/LOW** --> off = 7m - on = 15m range
Dip **NORM/PULSE** --> off = 1 pulse - on = 2 pulse
Dip **AND/OR-AUTO**** --> off-off = AND; on-off = OR; on-on = auto OR
Trimmer **RANGE** = used only for microwave. **NOTE:** The **RANGE** trimmer may need to be adjusted to the maximum position in order to achieve maximum area of coverage as indicated in Figure 3.

Jumpers **T** - **A** - **EOL** open = NC contacts without resistors (not for UL/ULC applications)
Jumpers **T** - **A** - **EOL** closed = DEOL supervision with internal resistors
SUPPLY terminals: Power supply 9-15 VDC / 56 mA. UL/ULC tested: 10.6-13 VDC / 56 mA. **Note:** For UL/ULC installations the detector shall be provided with minimum of 4 hours of standby power from either a listed compatible control unit or power supply. Output contacts ratings: 28 VDC / 100 mA. Use only resistive loads on the outputs.
MASK terminals = antimasking terminals present on LC-203/BLC-203 only

Note: Incorrect connections may result in failure or improper operation. Inspect wiring and ensure connections are correct before turning on the power.
***remote activation and deactivation of walk test LED for LC-203/BLC-203 only:** connect a 39 ohm resistor in series with the positive power supply, connect the NC output command in parallel with the R (see figure). The command should have a time of 3 or 4 seconds. At each command you will be able to turn the led on and off. For each connected detector add an R in parallel to the first one, and connect the power supplies that are in common.
** For UL/ULC installations use the OFF-OFF configuration only.

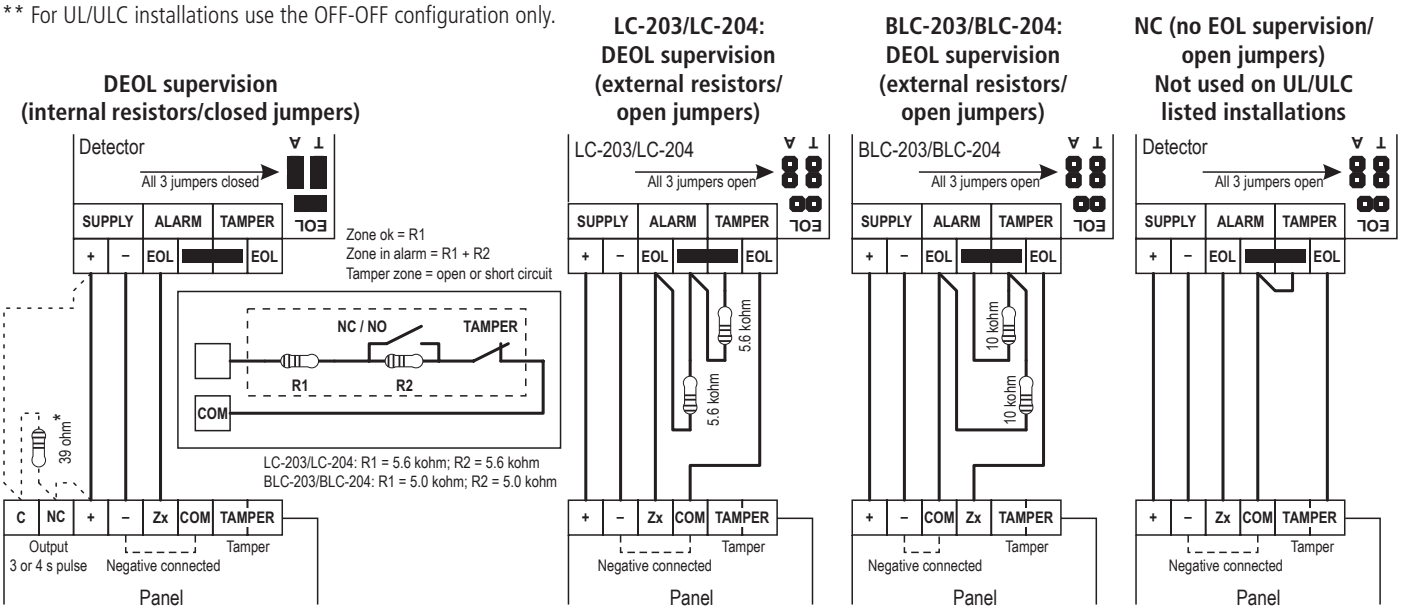

Technical Features

RANGE	15 m
HORIZONTAL COVERAGE	100°
LENSES	LODIFF® Fresnel Lens POLY IR®4 Material
LED	green, yellow, red
ALARM DURATION	2 s
SELF-DIAGNOSTICS	-
LED WALK TEST	YES
MICROWAVE FREQUENCY	10.525 GHz
MAXIMUM RADIO-FREQUENCY POWER	+14 dBm
SOLID STATE RELAY	YES
EOL RESISTANCE	YES
CREEP ZONE DEVICE	YES
CASE TAMPER	YES
BACK TAMPER	YES
ANTI-MASKING	LC-203/BLC-203
DOUBLE PULSE	YES
RFI PROTECTION	30 V/m
HEAT COMPENSATION	YES
FULLY DIGITAL	YES
JOINT	YES
POWER SUPPLY	9-15 VDC / 56 mA UL/ULC tested: 10.6-13 VDC / 56 mA
COVER MATERIAL	ABS
PET IMMUNITY	YES
OPERATING TEMPERATURE	-10°C to +40°C UL/ULC tested: 0°C to 49°C
HUMIDITY	93% RH
DIMENSIONS	114 x 63 x 40 mm

LC-203/BLC-203/LC-204/BLC-204 Microwave frequency: 10.525GHz

AT CZ EE FR
GE SK GB

CLASS 2 – 10.525 GHz

- Fig 3 -

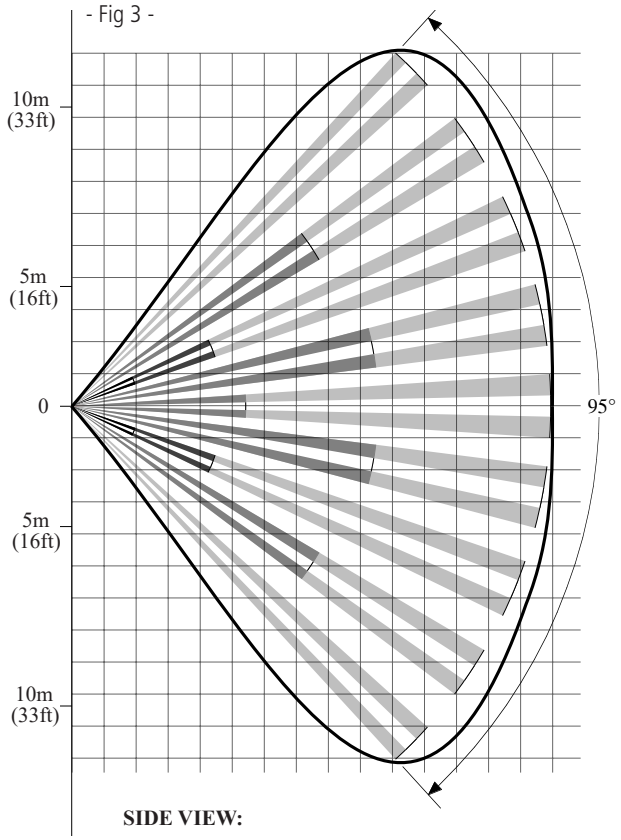

LC-203/BLC-203/LC-204/BLC-204 complies with requirements EN 50131-2-4 Grade 2 (grade 3 for LC-203/BLC-203), EN 50131-2-4 Class II

Hereby, **Tyco Safety Product Canada Ltd.** declares that the radio equipment type **LC-203/LC-204** is in compliance with Directive 2014/53/EU. The full text of the EU declaration of conformity is available at the following Internet address: **LC-203**, http://dsc.com/pdf/2210001; **LC-204**, http://dsc.com/pdf/2210002.

Hereby, **Johnson Controls Products Italia S.r.l.** declares that the radio equipment type **BLC-203/BLC-204** is in compliance with Directive 2014/53/EU. The full text of the EU declaration of conformity is available at the following Internet address: www.bentelsecurity.com/dc.

Installation must be carried out by trained personnel according to professional standards.

The manufacturer accepts no responsibility if the product is tampered with by unauthorized persons.

The alarm system should be checked for proper operation at least once a month. However, a reliable electronic alarm system does not prevent intrusion, robbery, fire or anything else but merely decreases the risk of such situations occurring.

UL/ULC has certified only the models LC-203 and LC-204 in accordance with UL639 and ULC-S306 for use in Residential and Commercial Burg applications (In Canada for Security Level I-II type applications). Use in dry, indoor ordinary locations, within the protected premises. The detectors shall be tested annually. The installation and wiring methods shall be in accordance with the National Electrical Code, NFPA 70 and CSA C22.1, Canadian Electrical Code, Part I, Safety Standard for Electrical Installations.

NOTE: This equipment has been tested and found to comply with the limits for a Class B digital device, pursuant to Part 15 of the FCC Rules. These limits are designed to provide reasonable protection against harmful interference in a residential installation. This equipment generates uses and can radiate radio frequency energy and, if not installed and used in accordance with the instructions, may cause harmful interference to radio communications. However, there is no guarantee that interference will not occur in a particular installation. If this equipment does cause harmful interference to radio or television reception, which can be determined by turning the equipment off and on, the user is encouraged to try to correct the interference by one or more of the following measures:

– Reorient or relocate the receiving antenna
– Increase the separation between the equipment and receiver
– Connect the equipment into an outlet on a circuit different from that to which the receiver is connected
– Consult the dealer or an experienced radio/TV technician for help.

Warning! Changes or modifications to this equipment not expressly approved by the party responsible for compliance (Tyco Safety Products Canada Ltd.) could void the user's authority to operate the equipment.

This device complies with part 15 of the FCC rules. Operations are subject to the following two conditions: (1) This device may not cause harmful interference and (2) This device must accept any interference received, including interference that may cause undesired operation.

FCC RF Exposure Statement

This equipment complies with FCC radiation exposure limits set forth for an uncontrolled environment. This transmitter must not be co-located or operating in conjunction with any other antenna or transmitter. In order to avoid the possibility of exceeding the FCC radio frequency exposure limits, this equipment should be installed and operated with minimum distance 20 cm (7.9 inches) between the antenna and your body during normal operation. Users must follow the specific operating instructions for satisfying RF exposure compliance.

ISED non-interference disclaimer

This device contains licence-exempt transmitter(s)/receiver(s) that comply with Innovation, Science and Economic Development Canada's licence-exempt RSS(s). Operation is subject to the following two conditions:

(1) This device may not cause interference.

(2) This device must accept any interference, including interference that may cause undesired operation of the device.

This device complies with the Canadian ICES-003 Class B specifications. CAN ICES-003(B) / NMB-003 (B).

L'émetteur/récepteur exempt de licence contenu dans le présent appareil est conforme aux CNR d'Innovation, Sciences et Développement économique Canada applicables aux appareils radio exempt de licence. L'exploitation est autorisée aux deux conditions suivantes :

(1) L'appareil ne doit pas produire de brouillage;

(2) L'appareil doit accepter tout brouillage radioélectrique subi, même si le brouillage est susceptible d'en compromettre le fonctionnement.

Cet appareil numérique de la Canadian ICES-003. Cet appareil numérique de la classe B est conforme à la norme NMB-003 du Canada.

ISED RF Exposure statement

This equipment complies with ISED RSS-102 radiation exposure limits set forth for an uncontrolled environment. This equipment should be installed and operated with minimum distance 20 cm (7.9 inches) between the radiator and any part of your body. This transmitter must not be co-located or operating in conjunction with any other antenna or transmitter.

Cet équipement est conforme aux limites d'exposition aux radiations ISED CNR-102 établies pour un environnement non contrôlé. Une distance de séparation d'au moins 20 cm doivent être maintenue entre l'antenne de cet appareil et toutes les personnes. Lanceurs ou ne peuvent pas coexister cette antenne ou capteurs avec d'autres.

© 2023 Johnson Controls. All rights reserved. JOHNSON CONTROLS is a registered trademark. Unauthorized use is strictly prohibited.