5 CHASSIS GROUND CONNECTION

A stud is provided on the rear side of the chassis for connecting a grounding wire to the chassis. Use the following procedure to connect the grounding wire to the chassis and to route the grounding wire to an approved earth ground source.

1. Obtain a length of #18 AWG (1.00 mm) insulated **stranded** copper wire for use as a chassis grounding wire.
2. Terminate one end of the wire with a ring terminal.
3. Locate the chassis ground stud at the rear of the HU as shown in Figure 3-7.

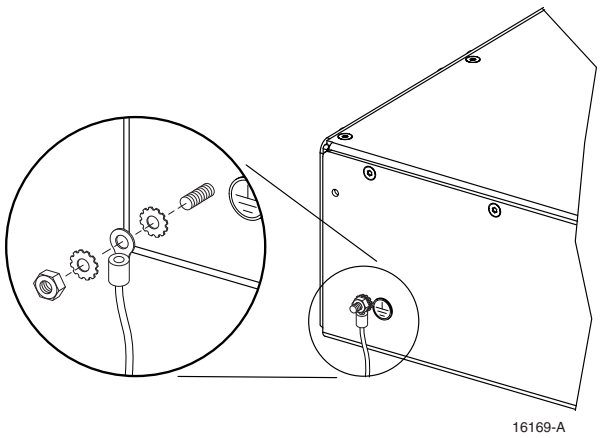

Figure 3-7. Chassis Ground Stud

4. Attach the ring end of the wire to the chassis ground stud (see Figure 3-7).
5. Route the free end of the chassis grounding wire to an approved (per local code or practice) earth ground source.
6. Cut the chassis grounding wire to length and connect it to the approved ground source as required by local code or practice.

Note: Be sure to maintain reliable grounding. Pay particular attention to ground source connections.

6 COAXIAL CABLE CONNECTIONS

The RF interface between the HU and the BTS is supported through two N-type female connectors mounted on the HU front panel. One connector provides the coaxial cable connection for the forward path (downlink) signal and the other connector provides the coaxial cable connection for the reverse path (uplink) signal.

In most installations, it is usually necessary to insert some attenuation in the forward path link between the HU and the BTS. A signal level that is greater than –9 dBm will overdrive and

© 2003, ADC Telecommunications, Inc.

possibly damage the HU receiver. Refer to Section 4, Subsection 2.3, before completing the forward path connection at the BTS. If the Conditioning Panel or Duplexing Panel is required, refer to the Digivance 800 and 1900 MHz Interface Panels User Manual (ADCP-75-147) for the installation procedures. The HU should be mounted as close as possible to the BTS to minimize cable losses. Use the following procedure to route and connect the forward and reverse path coaxial cables to the HU:

1. Obtain the required lengths of high performance, flexible, low loss 50-ohm coaxial communications cable (RG-400 or equivalent) for all coaxial connections.
2. Route the forward and reverse path coaxial cables between the HU and the BTS interface (per system design plan) and cut to the required length. Allow sufficient slack for dressing and organizing cables at the HU and for installing an external attenuator in the forward path link.
3. Terminate each cable with an N-type male connector following the connector supplier's recommendations.
4. Connect the forward path cable to the **FORWARD RF IN** connector on the HU front panel as shown in Figure 3-8.

Note: Do not connect the forward path cable at the BTS until the composite forward path RF signal level is measured and the amount of attenuation required is determined.

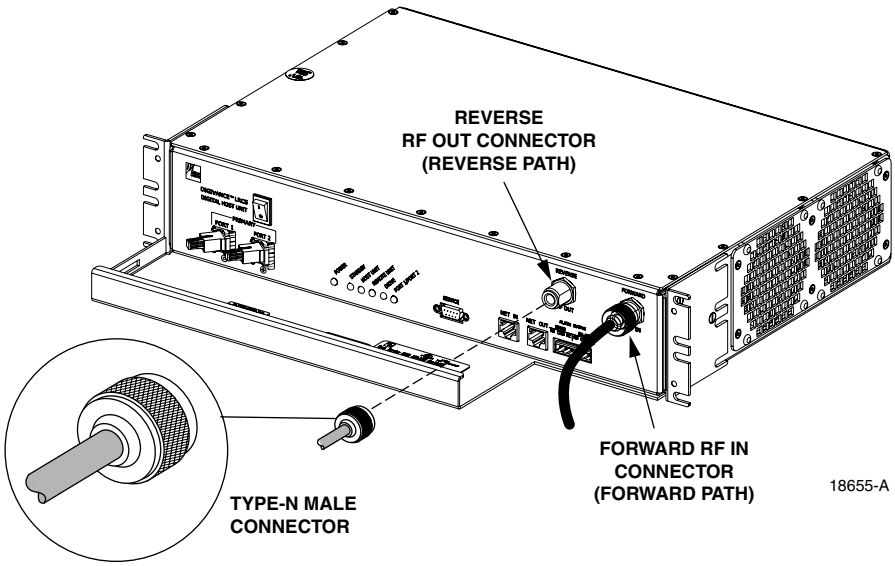

Figure 3-8. Forward and Reverse Path Coaxial Cable Connections

5. Connect the reverse path cable to the **REVERSE RF OUT** connector on the HU front panel (see Figure 3-8).
6. Dress and secure cables at the HU.
7. Complete all remaining coaxial connections as specified in the system design plan.

© 2003, ADC Telecommunications, Inc.

7 OPTICAL CONNECTIONS

The optical interface between the HU and the RU is supported by two optical ports. Each optical port consists of an SC optical adapter which is mounted on the HU front panel. Port 1 provides the optical fiber connection for the forward path (downlink) signal. Port 2 provides the optical fiber connection for the reverse path (uplink) signal.

The optical connections are dependent on whether or not a WDM host module (accessory) or CWDM host module (accessory) is installed. If the installation **does not** include either a WDM or CWDM module, proceed to Section 7.1 for the optical connections procedure. If the installation **includes** a WDM module, proceed to Section 7.2 for the optical connections procedure. If the installation **includes** a CWDM module, refer to the Digivance System Coarse Wavelength Division Multiplexer User Manual (ADCP-75-142) for the optical connection procedure.

⚠ **Danger:** *This equipment uses a Class 1 Laser according to FDA/CDRH rules. Laser radiation can seriously damage the retina of the eye. Do not look into the ends of any optical fiber. Do not look directly into the optical transmitter of any unit or exposure to laser radiation may result. An optical power meter should be used to verify active fibers. A protective cap or hood MUST be immediately placed over any radiating transmitter or optical fiber connector to avoid the potential of dangerous amounts of radiation exposure. This practice also prevents dirt particles from entering the connector.*

7.1 Optical Connections Without WDM or CWDM system

Use the following procedure to connect the optical fibers when a WDM or CWDM host module is not installed with the HU:

1. Obtain two patch cords that are of sufficient length to reach from the HU to the fiber distribution panel.
2. Designate one of the patch cords as the **forward path** link and the other as the **reverse path** link and attach an identification label or tag next to each connector.
3. Remove the dust caps from the HU optical ports and from the patch cord connectors that will be connected to the HU.
4. Clean each patch cord connector (follow patch cord supplier's recommendations).

➧ **Note:** To protect the optical receivers, insert a 15 dB attenuator in each optical path. After the optical power has been measured, the attenuator may be resized or removed.

5. Insert the connector into the appropriate optical port as shown in Figure 3-9.
6. Route the patch cords from the HU to the fiber distribution panel.

➧ **Note:** The HU optical adapters are angled to the **left**. Therefore, patch cords should always be routed to the HU from the **left** side of the rack. Routing patch cords to the HU from the right side of the rack may exceed the bend radius limitations for the optical fiber.

© 2003, ADC Telecommunications, Inc.

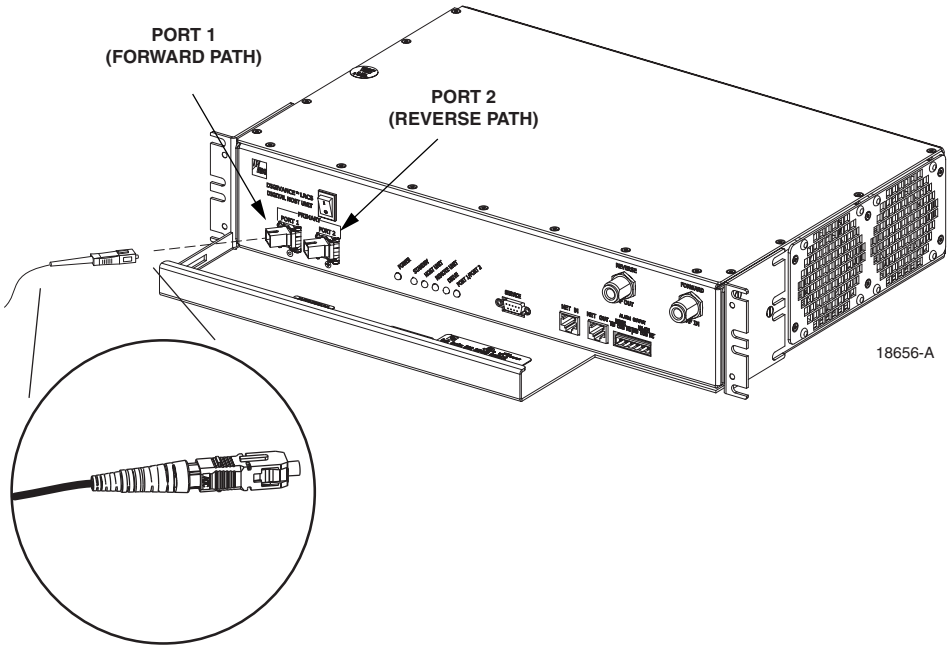

Figure 3-9. Fiber Optic Cable Connections To Host Unit

7. At the fiber distribution panel, identify the OSP optical fiber terminations that correspond to the forward and reverse path.
8. Remove the dust caps from the from the patch cord connectors.
9. Clean each patch cord connector (follow patch cord supplier's recommendations) and then mate the connector with the appropriate OSP optical fiber termination.
10. Store any excess patch cord slack at the fiber distribution panel.

7.2 Optical Connections With WDM System

Use the following procedure to connect the optical fibers when a WDM module is installed with the HU:

1. Obtain a patch cord that is of sufficient length to reach from the WDM host module to the fiber distribution panel.
2. Remove the dust cap from Port 1 or Port 4 on the WDM module and from the patch cord connector that will be connected to the WDM module.

Note: Each WDM module can support two separate HU's. The WDM module ports are numbered from 1 through 6 as shown in Figure 3-10. Ports 1 through 3 are used for HU #1 and Ports 4 through 6 are used for HU #2.

© 2003, ADC Telecommunications, Inc.

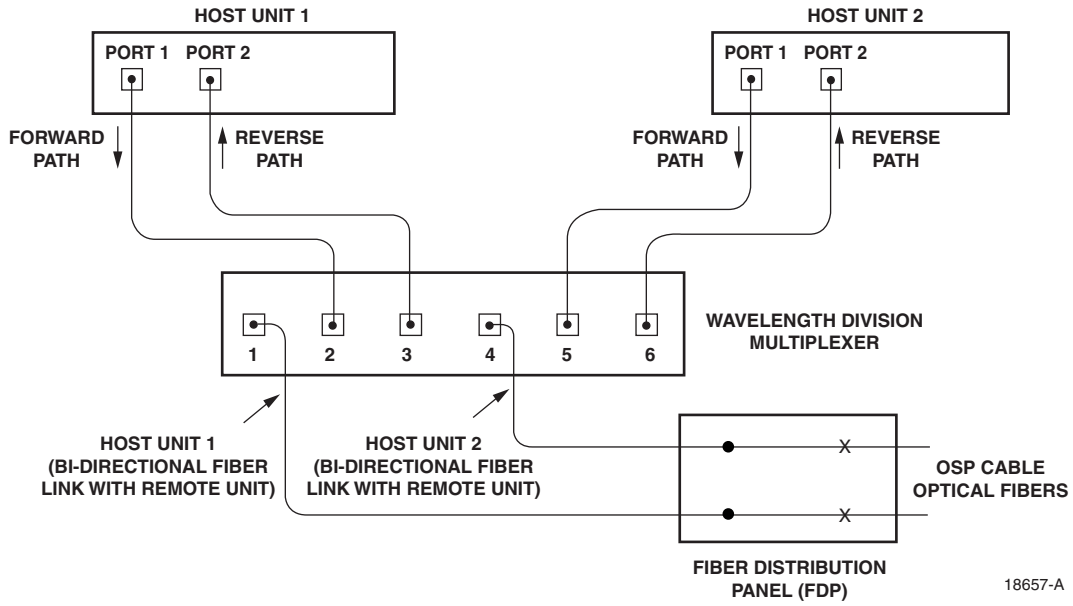

Figure 3-10. Fiber Optic Connections To WDM Module

3. Clean the patch cord connector (follow connector supplier's recommendations).

Note: To protect the optical receivers, insert a 15 dB attenuator in each optical path. After the optical power has been measured, the attenuator may be resized or removed.

4. Insert the connector into one of the WDM module's optical ports (port 1 or 4).
5. Route the patch cord from the WDM module to the fiber distribution panel.
6. Identify the OSP optical fiber termination that corresponds to the RU.
7. Remove the dust cap from the OSP cable optical adapter and from the patch cord connector.
8. Clean the patch cord connector (follow patch cord supplier's recommendations) and then mate the connector with the appropriate OSP optical fiber termination.
9. Store any excess patch cord slack at the fiber distribution panel.
10. Remove the dust caps from the HU optical ports and from the WDM pigtails that will be connected to the HU.
11. Clean each pigtail connector (follow the procedures provided with the WDM module) and then insert the connector into the appropriate optical port on the HU as shown in Figure 3-9 and as diagramed in Figure 3-10.

Note: The HU optical adapters are angled to the **left**. Therefore, pigtails should always be routed to the HU from the **left** side of the rack. Routing pigtails to the HU from the right side of the rack may exceed the bend radius limitations for the optical fiber.

© 2003, ADC Telecommunications, Inc.

8 CONTROLLER AREA NETWORK CONNECTIONS

Controller Area Network (CAN) interface connections between multiple HU's are supported by a pair of RJ-45 jacks. One of the jacks is designated as the NET IN port and the other jack is designated as the NET OUT port. The CAN interface allows up to 24 HU's to be connected together (in daisy-chain fashion) and controlled through a single Digivance EMS computer. A one meter long cable is available (accessory) for CAN connections. Use the following procedure to connect CAN interface cables between multiple HU's:

1. Connect one end of the CAN interface cable (accessory) to either the NET IN or NET OUT port on HU #1 as shown in Figure 3-11.

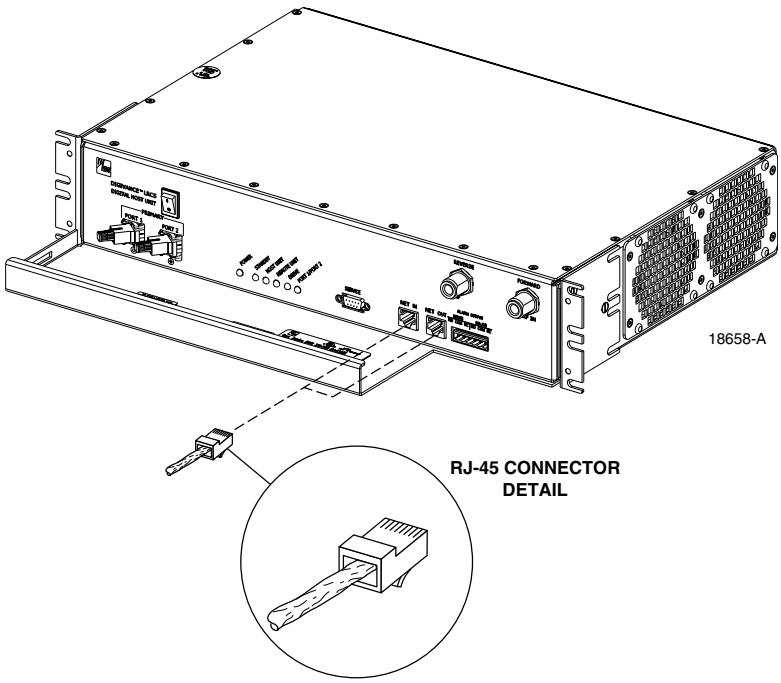

Figure 3-11. Controller Area Network Connections

2. Route the CAN interface cable to HU #2 and connect the cable's free end to the port that is the **logical opposite** of the CAN interface connection at HU #1.

Note: Connect OUT to IN and IN to OUT. If connected to the NET OUT port at HU #1, connect to the NET IN port at HU #2. If connected to the NET IN port at HU #1, connect to the NET OUT port at HU #2.

3. If a third HU will be connected to the network, connect a second CAN interface cable to the remaining network port on HU #2.
4. Route the second CAN interface cable to HU #3 and connect the cable's free end to the port that is the logical opposite of the CAN interface connection at HU #2.
5. Repeat steps 3 and 4 for each additional HU that is added to the network up to a total of 24 HU's. A diagram of typical CAN interface connections is shown in Figure 3-12.

© 2003, ADC Telecommunications, Inc.

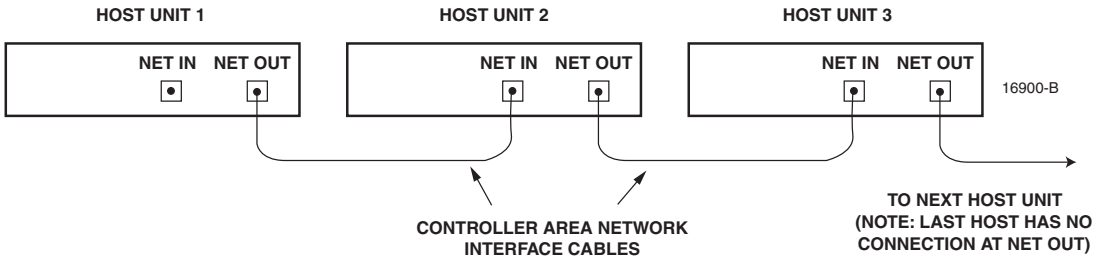

Figure 3-12. Configuring CAN Connections with Multiple Host Units

9 EMS COMPUTER CONNECTION

The service interface connection between the HU and the EMS computer is supported by a single DB-9 female connector. The service connector provides an RS-232 DTE interface. A three meter long straight-through RS-232 interface cable is available (accessory) for connecting the EMS computer to the HU. Use the following procedure to install the service interface cable:

1. Connect one end of the service interface cable (accessory) to the SERVICE port as shown in Figure 3-13.
2. Route the service interface cable to the EMS computer and connect the free end of the cable to the computer's RS-232 DCE port. Refer to the user manual provided with the computer to locate and configure the specified port.

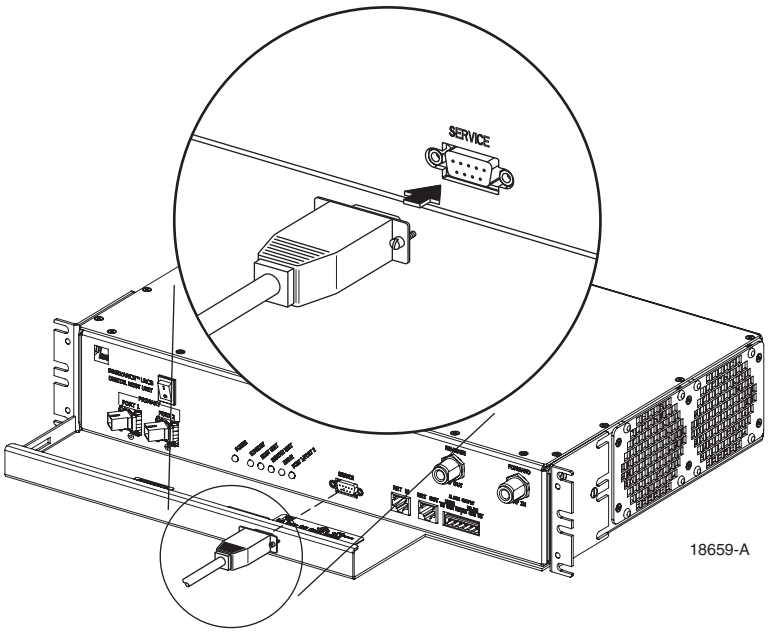

Figure 3-13. Service Interface Connection

© 2003, ADC Telecommunications, Inc.

10 EXTERNAL ALARM SYSTEM CONNECTIONS

The alarm interface between the HU and an external alarm system is supported by a six-terminal plug (with screw-type terminals) that connects to a receptacle mounted on the HU front panel. The terminal plug provides connections to normally open (NO) and normally closed (NC) dry type alarm contacts for both major and minor alarms. A category 3 or 5 cable is typically used to connect the HU to the external alarm system. Use the following procedure to install the alarm wiring and connect it to the HU:

1. Obtain the required length of category 3 or 5 cable.
2. Route the cable between the HU and the external alarm system (if not already routed) and then cut to the required length. Allow sufficient slack for dressing and organizing the cable at the HU.
3. Strip back the outer cable sheath and insulation to expose the wires at both ends of the cable and strip back 0.2 inches (5 mm) of insulation from each wire.
4. Connect the Major alarm wire pair to the MAJOR COM/NC or MAJOR COM/NO terminals (whichever is required by the external alarm system) on the HU alarm terminal connector (supplied with HU) as shown in Figure 3-14.

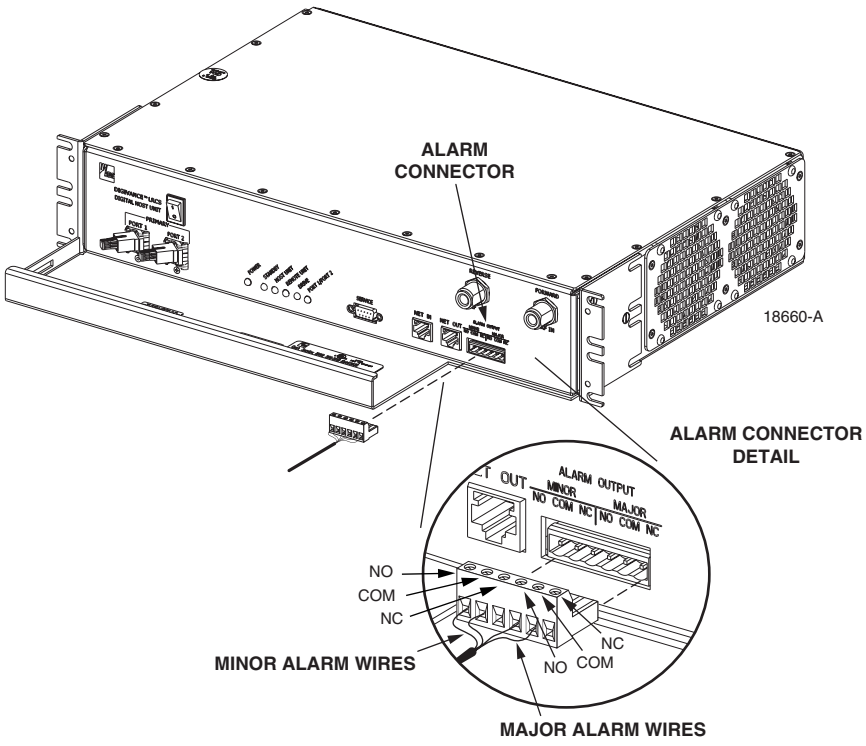

Figure 3-14. External Alarm System Connections

5. Connect the Minor alarm wire pair to the MINOR COM/NC or MINOR COM/NO terminals (whichever is required by the external alarm system) on the HU alarm terminal connector (see Figure 3-14).

© 2003, ADC Telecommunications, Inc.

6. Connect the Major and Minor alarm wire pairs to the appropriate terminals on the external alarm system.
7. Dress and secure cable per standard industry practice.

11 DC POWER CONNECTIONS

The HU is powered by ± 21 to ± 60 VDC power (nominal ± 24 or ± 48 VDC). The power is fed to the HU through a screw-down type terminal strip located on the rear side of the unit. Power to the HU must be supplied through a fuse panel such as the 20 position PowerWorx GMT Fuse Panel (available separately) and the power must be protected with a 3 Amp GMT fuse. Use the following procedure to install the power wiring:

1. Obtain one pair of #18 AWG (1.00 mm) red and black insulated copper wire for use as the power wiring.
2. Terminate one end of each wire with a fork terminal as shown in Figure 3-15.
3. Connect the power wires to the power terminal strip at the rear of the HU.

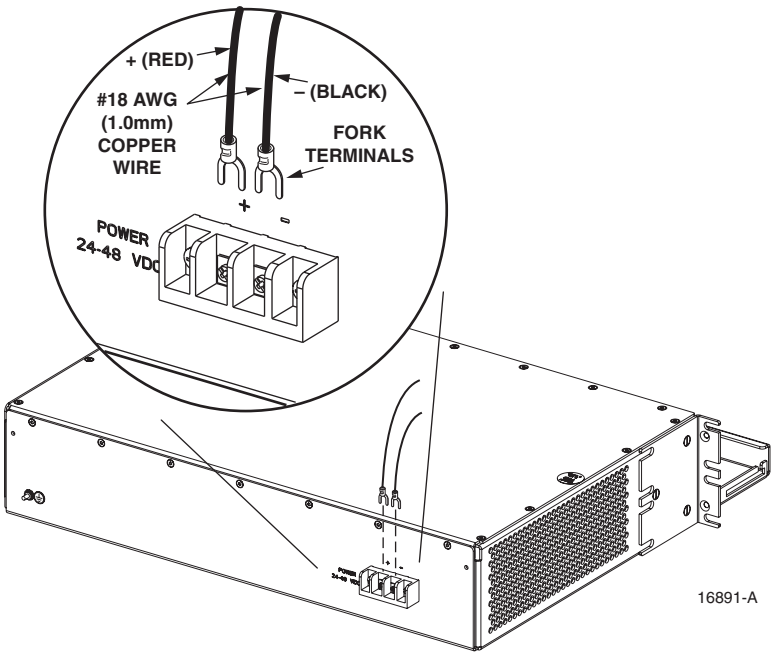

Figure 3-15. DC Power Connections

4. Route the free ends of the wires to the fuse panel and locate the terminals that will be used for the power feed. Refer to the user manual provided with the fuse panel for specific information.
5. Remove the fuse from the circuit that will power the HU.

© 2003, ADC Telecommunications, Inc.

6. Connect the power wires to the appropriate terminals as specified in the fuse panel user manual.
7. Dress and secure the power wiring at the fuse panel and the HU. The procedure for checking the voltage level and verifying that the HU is ready to power up is provided in SECTION 4: OPERATION.

© 2003, ADC Telecommunications, Inc.

Blank

© 2003, ADC Telecommunications, Inc.

SECTION 4: OPERATION

Content | Page

1 BEFORE STARTING OPERATION 4-1
1.1 Tools and Materials 4-1
1.2 Readiness Check 4-2
2 TURN-UP SYSTEM AND VERIFY OPERATION 4-2
2.1 Turn-Up Procedure 4-3
2.2 Verify/Download HU and RU System Software 4-6
2.3 Determine Forward Path Input Signal Level 4-7
2.4 Enter Site Name and Site Number 4-10
2.5 Enter Host Forward Attenuation 4-11
2.6 Determine Output Signal Level at STM Antenna Port 4-12
2.7 Enter Remote Forward Attenuation 4-13
2.8 Enter Host Reverse Attenuation 4-15
2.9 Enter Host Forward and Reverse Delay 4-17

1 BEFORE STARTING OPERATION

This section provides guidelines for turning-up the Digivance system, verifying that all units are operating properly, testing to ensure that all performance requirements are satisfied, and correcting any installation problems. This process assumes that the various units have been installed in accordance with the system design plan.

1.1 Tools and Materials

The following tools and materials are required in order to complete the procedures in this section:

- Portable spectrum analyzer or RF power meter
- AC/DC voltmeter
- External attenuators (if specified in system design plan)
- PC-type computer with Digivance Element Management System (EMS) Version 2.0 software installed
- Straight-through RS-232 DB-9 interface cable (ADC part # 1192835)
- Handset
- Pencil or pen
- Writing pad

© 2003, ADC Telecommunications, Inc.

1.2 Readiness Check

Before starting the turn-up process, inspect the complete Digivance system to verify that all components of the system are ready to be powered-up. This will ensure that no units of the system will be damaged during turn-up and that all existing systems will continue to function properly.

1.2.1 Host Unit Installation Checks

Complete the following checks at the HU prior to starting the turn-up process:

1. Verify that the ON/OFF switch on the HU is in the **OFF** position (press **0**).
2. At the fuse panel, install a 3 Amp GMT fuse in the circuit that supplies DC power to the HU.
3. Using a DC voltmeter, verify that the DC voltage level at the HU power terminals is between ± 21 to ± 60 VDC power (nominal ± 24 or ± 48 VDC). The DC power provided to the HU can be either polarity.
4. Verify that all electrical and optical connections have been completed and that all optical fibers, coaxial cables, and wires are properly routed and secured.

1.2.2 Remote Unit Installation Checks

Complete the following checks at the RU prior to starting the turn-up process:

1. Verify that the ON/OFF switch on the STM is in the **OFF** position (press **0**).
2. Verify that the MUTE/NORM/RESET switch on the LPA in the **MUTE** position.
3. At the AC breaker box, close the circuit breaker for the circuit that supplies AC power to the RU.
4. Using an AC voltmeter, verify that the AC voltage level at the AC outlet is between 110 and 120 VAC (for 120 VAC powered systems) or between 220 and 240 VAC (for 240 VAC powered systems).
5. Verify that all electrical and optical connections have been completed and that all optical fibers, coaxial cables, and wires are properly routed and secured.

2 TURN-UP SYSTEM AND VERIFY OPERATION

The process of turning-up the system and verifying operation involves powering up the various system components, verifying that the LED indicators show normal operation, setting the site number and name, adjusting the RF signal levels, and adjusting the path delay.

© 2003, ADC Telecommunications, Inc.

2.1 Turn-Up Procedure

Each Digivance system should be turned-up separately before being networked together with multiple systems through the CAN interface. Use the following procedure to turn-up each Digivance system:

1. Temporarily disconnect the external alarm system or notify the alarm system provider that testing is in progress.
2. If the HU is networked together with multiple HU's, temporarily disconnect the CAN cables from the NET IN and NET OUT ports of each HU.

Note: By default, all HU's and RU's are programmed with the same site number and name. This can cause problems for the EMS if multiple HU's with the same site number and site name are networked together through the CAN interface. It is therefore necessary to temporarily disconnect the CAN interface cables from the HU when configuring the system for operation until a unique site number and name can be assigned.

3. Determine if the forward path composite input signal level at the Host Unit FORWARD RF IN port is appropriate for the required RF output signal level and adjust by installing an **external attenuator** if necessary. Refer to Section 2.3 for the calculation and adjustment procedure.
4. Connect the EMS computer (if not already connected) to the SERVICE connector on the HU or STM front panel. If necessary, a separate laptop computer loaded with the EMS Version 2.0 software can be temporarily connected and used to initially configure the system.
5. Place the ON/OFF switch on the HU in the **ON** position (press **I**).
6. Make sure the switch on the LPA is in the **MUTE** position and then place the ON/OFF switch on the STM in the **ON** position (press **I**).
7. Wait 6 to 8 seconds for the HU and the RU modules to initialize and then observe the LED indicators on the HU, STM and LPA. Refer to Section 5 for the troubleshooting procedures if the indicators do not respond as specified.

HOST UNIT	SPECTRUM TRANSPORT MODULE	LINEAR POWER AMPLIFIER
POWER – Green	AC POWER – Green	STATUS – Steady green
STANDBY – Off	STANDBY – Off	
HOST UNIT – Green	HOST UNIT – Green	
REMOTE UNIT – Green	STM – Green	
DRIVE – Green, Yellow, or Red	PA – Green	
PORT 1/PORT 2 – Green	VSWR – Green	
	PORT 1/PORT 2 – Green	

8. Start up the EMS Version 2.0 software program. The EMS main window will open as shown in Figure 4-1. Note: The EMS software should be installed on a PC-type computer and the PC's COM port should be configured to interface with the HU. For information about installing the EMS software and configuring the PC's COM port, refer to the Digivance Element Management System Software User Manual (ADCP-75-125).

© 2003, ADC Telecommunications, Inc.