**Table 2-6. Interim Single-Band Remote Unit Nominal Specifications**

| PARAMETER | SPECIFICATION | REMARKS |
|---|---|---|
| **Physical/Environmental/ Electrical - Remote Unit**<br>Dimensions (L×W×D) | 37.3 × 10.2 × 7.5 inches<br>(947 × 259 × 191 mm) | |
| Mounting | Pole, wall, or strand mounted | Requires accessory kit for strand mounting |
| Weight | 79.5 lbs. (36.1 kg) | With solar shields installed |
| Weather resistance | NEMA 4X, IEC IP 67 | Indoor or outdoor installation |
| Lightning protection | 20 kA IEC 1000-4-5 8/20 µs waveform | With external protector (accessory) |
| Operating temperature | –30º to 50º C (–22º to 122º F) | |
| Storage temperature | –40º to 70º C (–40º to 158ºF) | |
| Humidity | 10% to 90% | No condensation |
| AC power connector | Mini 3-pin | 3-wire power cable included |
| Antenna connector(s) | 50 ohm N-type (female) | 50 ohms input/output impedance |
| Optical port | OptiTap with APC/SC connector and adapter | |
| Voltage input | 90 to 265 VAC, 47 to 63 Hz<br>60 to 89 VAC, 47 to 63 Hz | Standard<br>Option |
| Power consumption | 150 Watts | |
| Current rating | 1.25 Amps at 120 VAC<br>.625 Amps at 240 VAC | |
| Reliability at 25ºC | MTBF - 80,000 hours | |


© 2005, ADC Telecommunications, Inc.

Blank


© 2005, ADC Telecommunications, Inc.

# SECTION 3: OPERATION

Content | Page


1 BEFORE STARTING OPERATION . . . . . 3-1
1.1 Tools and Materials . . . . . 3-1
1.2 Readiness Check . . . . . 3-2
2 TURN-UP SYSTEM AND VERIFY OPERATION . . . . . 3-2
2.1 Turn-Up Procedure . . . . . 3-3
2.2 Determine Forward Path Input Signal Level . . . . . 3-6
2.3 Enter Site Name and Site Number . . . . . 3-8
2.4 Enter Host Forward Attenuation . . . . . 3-10
2.5 Determine Output Signal Level at RU Antenna Port . . . . . 3-11
2.6 Enter Remote Forward Attenuation . . . . . 3-12
2.7 Enter Host Reverse Attenuation . . . . . 3-14
2.8 Enter Host Forward and Reverse Delay . . . . . 3-15


## 1 BEFORE STARTING OPERATION

This section provides guidelines for turning-up the Digivance system, verifying that all units are operating properly, testing to ensure that all performance requirements are satisfied, and correcting any installation problems. This process assumes that the various units have been installed in accordance with the system design plan.

### 1.1 Tools and Materials

The following tools and materials are required in order to complete the procedures in this section:

- Portable spectrum analyzer and RF power meter
- DC voltmeter
- External RF and optical attenuators (if specified in system design plan)
- PC-type computer with Digivance Element Management System (EMS) Version 3.01 software installed
- Straight-through RS-232 DB-9 interface cable (accessory)
- Subscriber unit
- Pencil or pen
- Writing pad


© 2005, ADC Telecommunications, Inc.

## 1.2 Readiness Check

Before starting the turn-up process, inspect the complete Digivance system to verify that all components of the system are ready to be powered-up. This will ensure that no units of the system will be damaged during turn-up and that all existing systems will continue to function properly.

### 1.2.1 Host Unit Installation Checks

Complete the following checks at the HU prior to starting the turn-up process:

1. Verify that the ON/OFF switch on the HU is in the **OFF** position (press **0**).

➧ **Note:** When connecting the equipment to the supply circuit, be sure to check equipment nameplate ratings to avoid overloading circuits which may cause damage to over-current protection devices and supply wiring.

2. At the fuse panel, install a 3 Amp GMT fuse in the circuit that supplies DC power to the HU.
3. Using a DC voltmeter, verify that the DC voltage level at the HU power terminals is between ± 21 to ± 60 VDC (nominal ± 24 or ± 48 VDC). The DC power provided to the HU can be either polarity.
4. Verify that all electrical and optical connections have been completed and that all optical fibers, coaxial cables, and wires are properly routed and secured.

### 1.2.2 Remote Unit Installation Checks

Complete the following checks at the RU prior to starting the turn-up process:

1. Verify that all electrical and optical connections have been completed and that all optical fibers, coaxial cables, and wires are properly routed and secured.
2. At the AC breaker box, make sure the circuit breaker for the circuit that supplies AC power to the RU is in the **open** (off) position.

# 2 TURN-UP SYSTEM AND VERIFY OPERATION

The process of turning-up the system and verifying operation involves powering up the various system components, verifying that the LED indicators show normal operation, setting the site number and name, adjusting the RF signal levels, and adjusting the path delay.

➧ **Note:** SCS systems that include a dual-band RU are comprised of two systems that operate and function independently of each other. Each system can be independently turned-up, tested, and placed into service. The EMS will recognize each system regardless of the frequency/band and will display the appropriate screens. The frequency/band can be verified by clicking on the HOST **Host** tab and on the REMOTE **STM** tab. The frequency/band for the selected system will be displayed on the right side of the screen.


© 2005, ADC Telecommunications, Inc.

## 2.1 Turn-Up Procedure

Each Digivance system must be turned-up separately before being networked together with multiple systems through the CAN interface. Use the following procedure to turn-up each Digivance system:

1. Temporarily disconnect the external alarm system or notify the alarm system provider that testing is in progress.
2. If the HU is networked together with multiple HU's, temporarily disconnect the CAN cables from the NET IN and NET OUT ports of the HU.

**Note:** By default, all HU's and RU's are programmed with the same site number and name. This can cause problems for the EMS if multiple HU's with the same site number and site name are networked together through the CAN interface. It is therefore necessary to temporarily disconnect the CAN interface cables from the HU when it is being configured for operation until a unique site number and name can be assigned.

3. Determine if the forward path composite input signal level at the host unit RF IN port(s) is appropriate to produce the required RF output signal level. Note that 800/900 MHz SMR host units have two forward path RF ports. Adjust by installing an **external attenuator** if necessary. For adjustment purposes, the optimum input signal level is **–20 dBm** for 800/900 MHz SMR systems. Refer to Section 2.2 for the calculation and adjustment procedure.
4. At the HU: Place the ON/OFF switch on the HU in the **ON** position (press **I**).
5. At the RU: Place the AC circuit breaker switch in the closed (ON) position.
6. Wait 6 to 10 seconds for the HU and the RU to initialize and then observe the LED indicators on the HU and RU. Refer to Section 4: Maintenance for the troubleshooting procedures if the indicators do not respond as specified in Table 3-1.

**Table 3-1. LED Indicator Operation at Initial Turn-Up**

| REAR ACCESS HOST UNIT | REMOTE UNIT |
|---|---|
| POWER – Green | No LED designation – Off<br><br>Note: This LED will stay red for 6 to 10 seconds while the RU initializes and then turn off. |
| STANDBY – Off | |
| HOST UNIT – Green | |
| REMOTE UNIT – Green | |
| DRIVE 851–869 – Green, Yellow, or Red<br>DRIVE 935–940 – Green, Yellow, or Red | |
| FWD/REV (PORT 1/PORT 2) – Green | |

7. Measure the input optical power level at the HU and RU and verify that the optical power level received at the HU and RU is within –15 to –25 dBm with –17 dBm recommended for commissioning. Refer to Section 4: Maintenance for the optical power test procedure.
8. Connect the EMS computer (if not already connected) to the SERVICE connector on the HU front panel. If necessary, a separate laptop computer loaded with EMS Version 3.01 software can be temporarily connected and used to initially configure the system.


© 2005, ADC Telecommunications, Inc.

9. Start up the EMS Version 3.01 software program. The EMS main window will open as shown in Figure 3-1. The EMS software should be installed on a PC-type computer and the PC's COMM port should be configured to interface with the HU. For information about installing the EMS software and configuring the PC's COMM port, refer to the Digivance Element Management System Version 3.01 User Manual (ADCP-75-182).

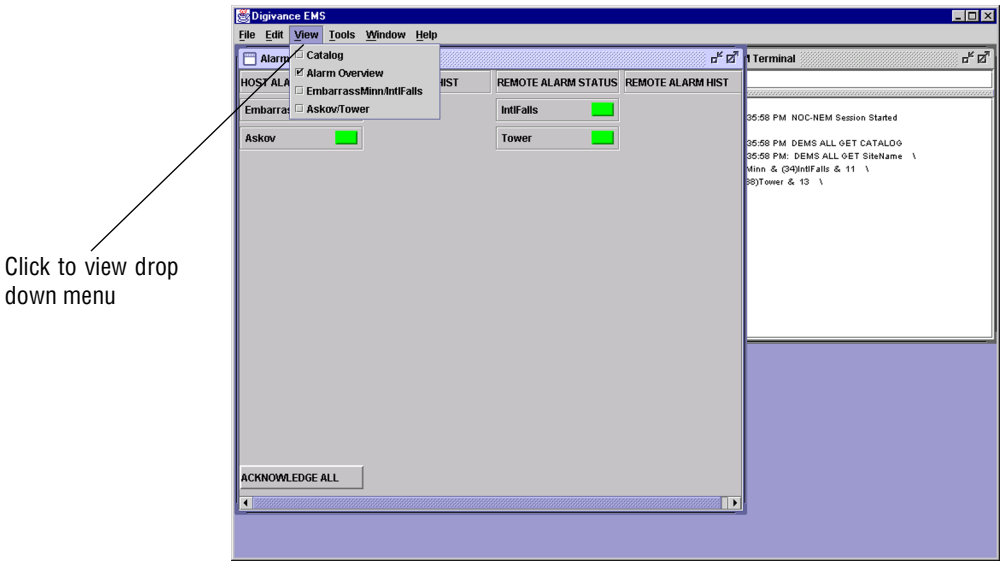


**Figure 3-1. Digivance Element Management System Main Window**

10. Open the **View** drop down menu and connect to the Host and Remote pair by selecting the "NotNamed/NotNamed" Host/Remote pair. The HOST **Alarms** display and the REMOTE **Alarms** display will open within the main window as shown in Figure 3-2.

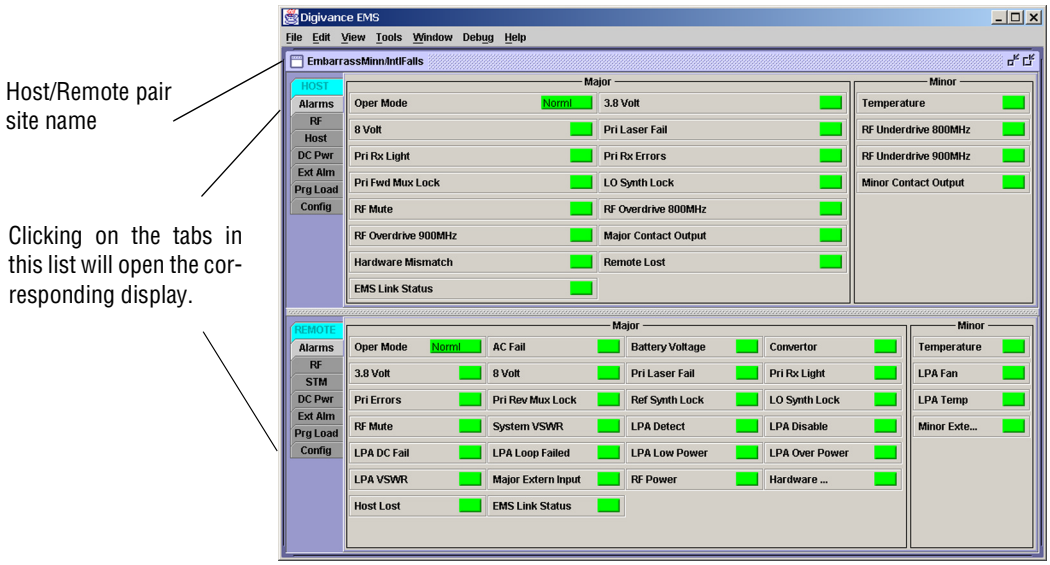


**Figure 3-2. Selecting Display Tabs**


© 2005, ADC Telecommunications, Inc.

11. New Control program software and FPGA program software will be provided separately on a “as needed” basis. If new Control and FPGA software is not provided with the system, proceed to step 12. If a Control and FPGA software upgrade is required, contact the ADC Technical Assistance Center (see Section 5) for help with the download procedure.
12. Click on the HOST **Config** tab and on the REMOTE **Config** tab (see Figure 3-2). The HOST **Config** display and the REMOTE **Config** display will open within the main window.
13. Enter the **Site Name** and **Site Number** for both the HOST and the REMOTE unit. Refer to Section 2.3 for details.

➧ **Note:** The Site Name and Site Number must be unique for each Digivance system.

14. If the Digivance system will be networked together with other Digivance systems, reconnect the CAN cables to the HU’s NET IN and NET OUT ports.
15. Verify that no Major or Minor alarms are being reported in either the HOST or REMOTE **Alarm** displays (except as indicated in the note below) and that all alarm fields are green.

➧ **Note:** The Host RF Underdrive may indicate a minor alarm until the Host Fwd Att and Remote Fwd Att values are set.

16. Click on the HOST **RF** tab (see Figure 3-2). The HOST **RF** display will open within the main window.
17. Enter the **Host Fwd Att** (Forward Attenuation) value. This sets the forward input RF signal level at the HU. Refer to Section 2.4 for details. By default, this value is set to 31 dB. If the DRIVE LED on the HU front panel was red, it should turn green when this step is completed. Note that 800/900 MHz SMR HU’s have two DRIVE LED’s.
18. Determine if the RF output power at the RU ANTENNA is at the correct level up to a composite maximum of +38.1 dBm (6.5 Watts) for 800/900 MHz SMR systems. Refer to Section 2.5 for details.
19. Click on the REMOTE **RF** tab (see Figure 3-2). The REMOTE **RF** display will open within the main window.
20. Enter the **Remote Fwd Att** value. This adjusts the RF output signal level at the HU ANTENNA port. By default this value is set to 31 dB. Refer to Section 2.6 for details.
21. Click on the HOST **RF** tab (see Figure 3-2). The HOST **RF** display will open within the main window.
22. Enter the **Host Rev Att** (Reverse Attenuation) values. This sets the reverse output RF signal levels at the host unit RF OUT port(s). By default each value is set to 31 dB. Refer to Section 2.7 for details. Note that 800/900 MHz SMR host units have two REVERSE RF OUT ports.
23. If a delay adjustment is required, enter the **Host Fwd Delay** and **Host Rev Delay** values. By default, the delay values are set to 0. Refer to Section 2.8 for details.


© 2005, ADC Telecommunications, Inc.

24. If a separate laptop computer loaded with the EMS software was used to initially configure the system, disconnect the laptop computer from the SERVICE connector.

**Note:** When two or more HU's are connected together through the CAN interface, only one EMS computer is required to manage the networked Digivance systems. The EMS computer may be connected to the SERVICE port on any one of the HUs in the network.

25. Reconnect the external alarm system or notify the alarm system provider that the turn-up process has been completed.

## 2.2 Determine Forward Path Input Signal Level

The level of the composite RF input signals received at the host unit FORWARD RF IN port(s) will vary depending on the EBTS, the cable loss, the number of channels present, and the required forward path composite power. If maximum composite RF output is required at the RU, the level of the composite RF input signal received at the HU must fall within a range of **–9 to –40 dBm**. If the signal level is not within this range, it must be adjusted using an external attenuator. Note: The 800/900 MHz SMR host unit has two FORWARD RF IN ports. Use the 851–869 FORWARD RF IN port to complete this procedure. Then repeat this procedure for the 935–940 FORWARD RF IN port.

**Warning:** *The Host Unit can be damaged if it is overdriven by the EBTS. The forward path composite input signal level at the Host Unit FWD RF IN port must not exceed –9 dBm.*

**Note:** The optimum level for an 800/900 MHz SMR composite input signal is **–20 dBm**

When connecting a single HU to a single EBTS, use the following procedure to measure and adjust the input RF signal level at the HU:

1. Connect a spectrum analyzer or power meter to the forward path output port at the EBTS. The required signal levels and test points for **800/900 MHz SM**R systems are shown in Figure 3-3. Note that 800/900 MHz SMR Host Units have two forward path ports.

**Note:** Check the input rating of the test equipment and the output rating of the EBTS. To avoid burning out the spectrum analyzer or power meter, it may be necessary to insert a 30 dB 100W (or similar) attenuator between the EBTS and test equipment.

2. If using a spectrum analyzer, proceed to step 3. If using a power meter, measure the composite signal power from the EBTS and then proceed to step 5.
3. Measure the RF level of a single carrier, such as the control channel, in dBm. Make sure the resolution bandwidth of the spectrum analyzer is 30 kHz. Maximum composite power in any channel should not exceed 5W (+37 dB).
4. Calculate the total composite signal power from the EBTS using the following formula:

   $P_{tot} = P_c + 10\text{Log } N$ where,

   $P_{tot}$ is the total composite power in dBm

   $P_c$ is the power per carrier in dBm as measured in step 3, and

   N is the total number of channels.


© 2005, ADC Telecommunications, Inc.

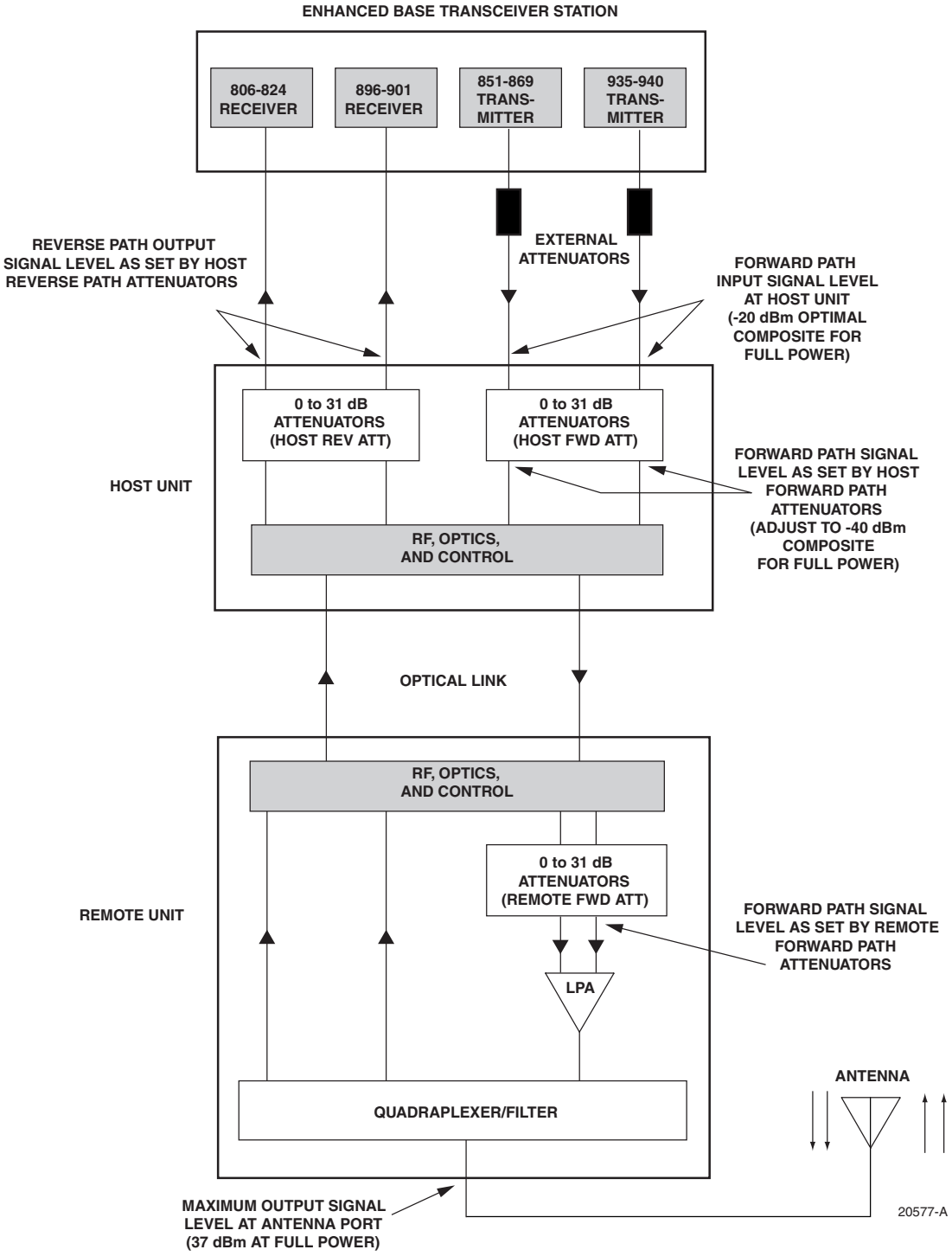


**Figure 3-3. Signal Levels, Test Points, and Adjustments for 800/900 MHz SMR Systems**


© 2005, ADC Telecommunications, Inc.

5. Determine the total cable loss that is imposed by the forward path coaxial cable that links the EBTS to the HU and also any insertion loss imposed by splitters or combiners.
6. Subtract the total cable loss and any insertion losses from the total composite power calculated in step 4.
7. Subtract –20 (optimum input signal level) from the value determined in step 6. The difference (which should be positive) equals the value of the external attenuator that is required to reduce the forward path signal level to the optimum level for input to the HU. The following formula outlines the required calculations for steps 6 and 7:

   $P_{tot}$ – (Cable and insertion loss) – (–20) = Value of external attenuator required

**Note:** If the input signal level is already –20 dBm, no external attenuator is required.

8. Select an attenuator that is as close to the value calculated in step 7 as possible.
9. Install the external attenuator in the coaxial cable that is connected to the corresponding FORWARD RF IN port at the HU.

**Caution:** *The Host Unit can be damaged if it is overdriven by the EBTS. Always install an* ***external protective attenuator*** *at the Host Unit FWD RF IN port if the forward path composite input signal level is greater than –9 dBm.*

10. Repeat steps 1–9 for the 935–940 FORWARD RF IN port at the HU. Install the external attenuator in the coaxial cable that is connected to the 935–940 FORWARD RF IN port at the HU.
11. Subtract the value of the external attenuator from the total composite signal power ($P_{tot}$) and record the result. This value will be required when setting the attenuation of the HU's internal forward path attenuators.

## 2.3 Enter Site Name and Site Number

All HU's and RU's are programmed with the same site name and site number. It is therefore necessary to assign a unique site name and site number to the HU and RU before they can be connected to the same CAN network. Use the following procedure to assign a unique site name and number to each HU and RU system:

1. Click on the HOST **Config** tab and on the REMOTE **Config** tab. The HOST **Config** display and the REMOTE **Config** display will open within the EMS main window as shown in Figure 3-4.
2. Click on the HOST **Site Name Edit** button (see Figure 3-4). The **Site Name** pop-up screen will open as shown in Figure 3-5. Enter a unique name for the HOST. The name may be up to 32 characters long and must not contain any spaces. The name may include numbers, punctuation, and upper or lower case letters and must always begin with a letter. Click on **OK** to close the screen and make the changes take effect.


© 2005, ADC Telecommunications, Inc.

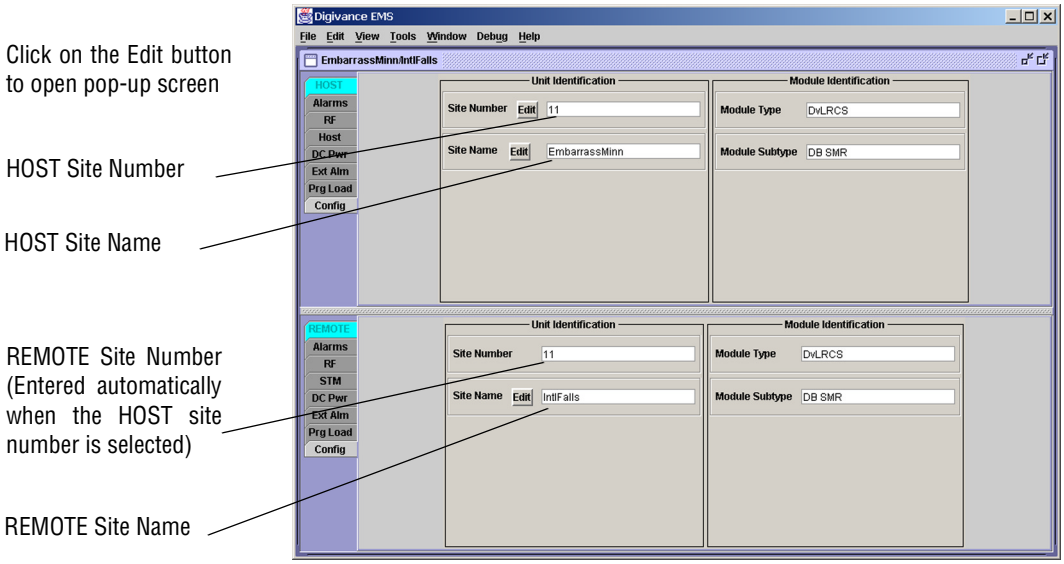


**Figure 3-4. HOST and REMOTE Config Displays**

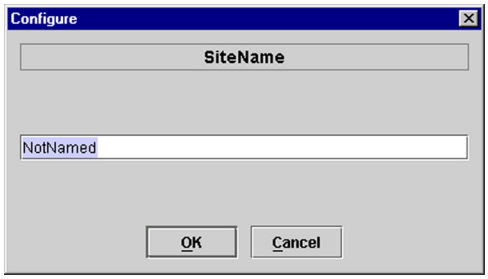


**Figure 3-5. HOST Site Name Pop-Up Screen**

3. Click on the HOST **Site Number Edit** button (see Figure 3-4). The **Site Number** pop-up screen will open. Enter any number (must be unique) between 1 and 24 and then click on **OK** to close the screen and make the changes take effect.
4. Check the REMOTE **Site Number** field (see Figure 3-4). The REMOTE Site Number does not have to be entered. When the HOST Site Number is entered, the system will automatically enter the same number for the REMOTE Site Number.
5. Click on the REMOTE **Site Name Edit** button (see Figure 3-4). The **Site Name** pop-up screen will open. Enter a unique name for the REMOTE. The name may be up to 32 characters long and must not contain any spaces. The name may include numbers, punctuation, and upper or lower case letters and must always begin with a letter. Click on **OK** to close the screen and make the changes take effect.
6. Open the Tools menu at the top of the main window and then select Refresh Catalog to make the new Host and Remote site names appear in the View menu.


© 2005, ADC Telecommunications, Inc.

## 2.4 Enter Host Forward Attenuation

The HU internal forward path attenuator setting determines the maximum composite output signal level at the RU antenna port. The appropriate attenuation value for any particular system is based on the number of channels the system is transporting and the signal level of the composite forward path signals input at the host units RF IN ports. By default, the forward path attenuator is set to 31 dB.

The maximum output power is 38.1 dBm (6.5 Watts) for 800/900 MHz SMR systems. The total forward path gain that is provided by the system (with host and remote forward attenuators set to 0 dB) is 77.5 dBm for 800/900 MHz SMR systems. Note that for 800/900 MHz SMR systems, this procedure sets the attenuation for both FORWARD RF IN ports.

Use the following procedure to set the forward path attenuation to provide the maximum composite output signal level:

1. Click on the HOST **RF** tab. The HOST **RF** display will open within the EMS main window as shown in Figure 3-6.

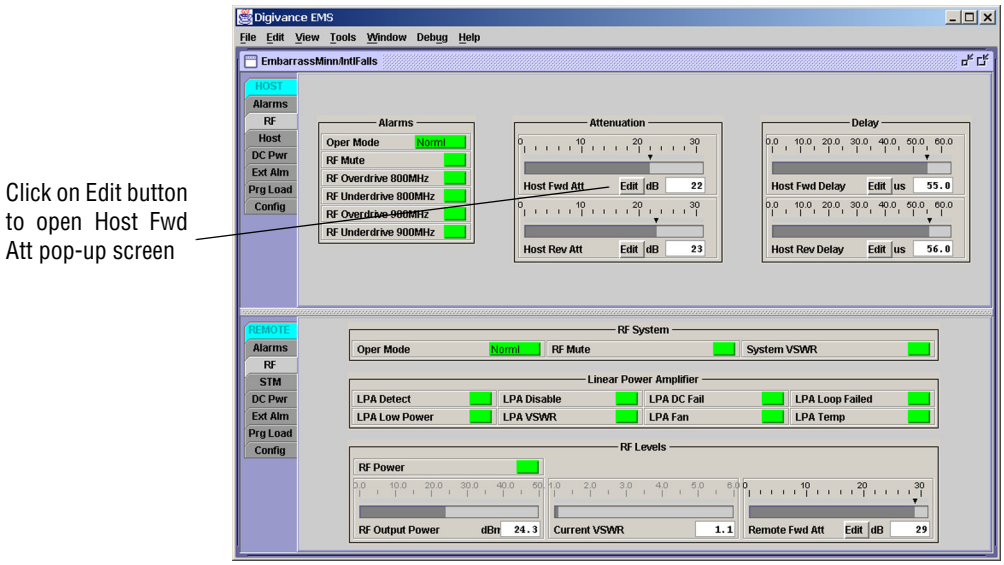


**Figure 3-6. HOST RF Display**

2. Click on the **Host Fwd Att Edit** button (see Figure 3-6). The **Host Fwd Att** pop-up screen will open as shown in Figure 3-7.
3. Obtain the value of the total composite input signal level as determined in step 11 of Section 2.2.


© 2005, ADC Telecommunications, Inc.

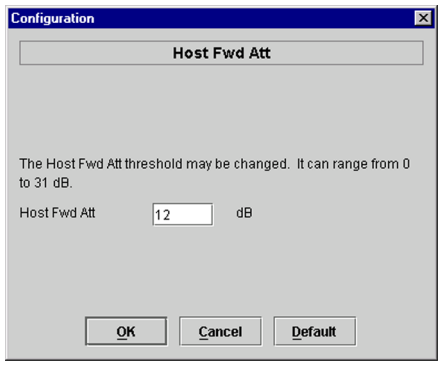


**Figure 3-7. Host Fwd Att Pop-Up Screen**

4. Determine the appropriate value to enter for the Host forward path attenuator by subtracting the required system output level (per system design plan) from the system gain (77.5 dB for 800/900 MHz SMR) and then adding the composite input signal level. The result (see sample calculation) is the amount of attenuation required.

   Atten = (System Gain) – (Required System Output Power) + (Composite Input Power)

5. Enter the attenuation value and click OK to close the pop-up screen and to make the changes take effect.

## 2.5 Determine Output Signal Level at RU Antenna Port

The RF output signal level should be measured at the RU ANTENNA port to verify that the composite signal level is at the expected level. Use the following procedure to determine the power level:

➧ **Note:** The RF output signal level measured in this procedure should be approximately 31 dBm less than the output level specified for operation. This is because the factory default setting for the **remote** forward attenuator is 31 dB. The final adjustment of the system RF output signal level will be completed in Section 2.6

1. Place the AC circuit breaker switch (at the RU power panel) in the open (OFF) position.
2. Disconnect the antenna cable from the RU ANTENNA port.
3. Connect a spectrum analyzer or RF power meter to the HU ANTENNA port. (Check the input rating of the test equipment. Insert a 30 dB 100 W attenuator if necessary.)
4. Place the AC circuit breaker switch (at the RU power panel) in the closed (ON) position.
5. If using a spectrum analyzer, proceed to step 6. If using a power meter, measure the composite signal power from the RU and then proceed to step 8.
6. Measure the RF level of a single carrier, such as the control channel, in dBm. Make sure the resolution bandwidth of the spectrum analyzer is 30 kHz.


© 2005, ADC Telecommunications, Inc.

7. Calculate the total composite signal power using the following formula:

   $P_{tot} = P_c + 10\text{Log } N$

   Where,

   $P_{tot}$ is the total composite power in dBm

   $P_c$ is the power per carrier in dBm as measured in step 6, and

   N is the total number of channels.

8. Record the result measured in step 5 or calculated in step 7.
9. Place the AC circuit breaker switch (at the RU power panel) in the open (OFF) position.
10. Disconnect the spectrum analyzer or RF power meter from the HU ANTENNA port.
11. Re-connect the antenna cable to the HU ANTENNA port.

**Note:** To comply with Maximum Permissible Exposure (MPE) requirements, the maximum composite output from the antenna cannot exceed 1000 Watts EIRP and the antenna must be permanently installed in a fixed location that provides at least **6 meters** (20 feet) of separation from all persons.

12. Place the AC circuit breaker switch (at the RU power panel) in the closed (ON) position.

## 2.6 Enter Remote Forward Attenuation

The RU internal forward path attenuator setting is used to reduce the power level of the composite output signals at the RU. The maximum composite output signal level at the RU antenna port is set using both the HU forward attenuator (see Section 2.4) and the RU forward attenuator. Component variations may result in the output power at the HU antenna port being slightly above or below the calculated value. The RU forward attenuator is used in conjunction with the HU forward attenuator to add or remove attenuation to produce the required output signal level at the antenna port. The default setting for the RU forward attenuator is 31 dB. Use the following procedure to change the RU forward attenuation:

**Caution:** *The RU may be destroyed if the maximum recommended output signal level at the RU antenna port is exceeded. Make sure that sufficient attenuation is inserted in the forward path to prevent the RU from being overdriven.*

1. Click on the REMOTE **RF** tab. The REMOTE **RF** display will open within the EMS main window as shown in Figure 3-8.
2. Check the level of the RF output signal (as determined in Section 2.5) against the system design plan specifications. The maximum output signal level permitted is 38.1 dBm (6.5 Watts) for 800/1900 MHz SMR systems.
3. Determine if more or less attenuation is required to produce the required output signal level.
4. Click on the **Remote Fwd Att** field **Edit** button (see Figure 3-8). The **Remote Fwd Att** pop-up screen will open as shown in Figure 3-9.
5. Enter the required attenuation value and click OK to close the pop-up screen and to make the changes take effect.


© 2005, ADC Telecommunications, Inc.

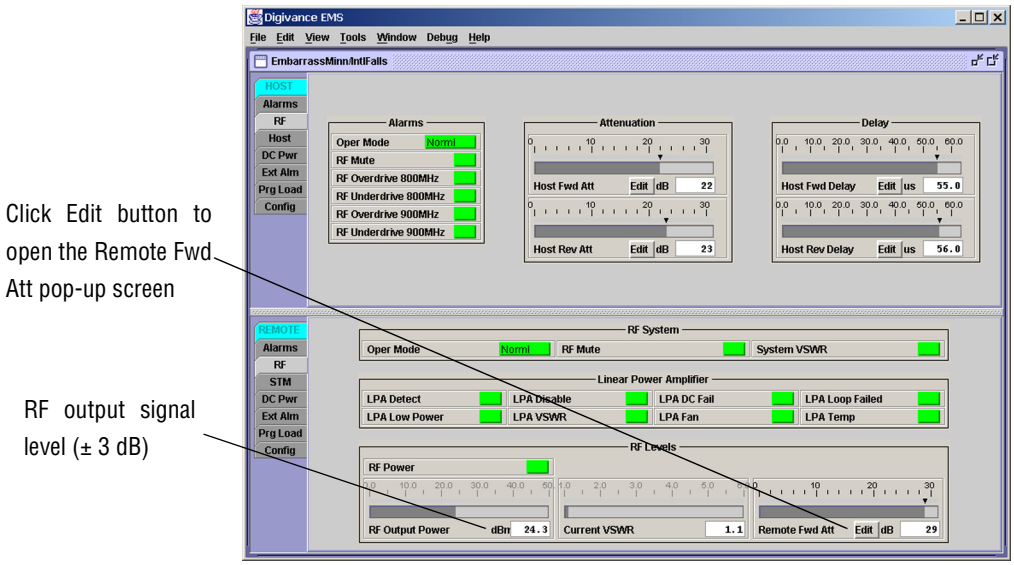


**Figure 3-8. REMOTE LPA Display**

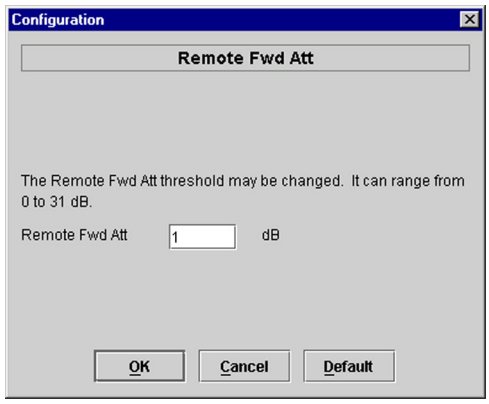


**Figure 3-9. Remote Fwd Att Pop-Up Screen**

6. Verify that the appropriate RF output signal level appears in the **RF Output Power** field (see Figure 3-8). This is primarily a reference value and should not take the place of external test equipment when determining the power level of the composite RF output signal. Depending on the modulation type and number of channels, the EMS software may report a power level that is higher or lower (± 3 dB) than the actual RF output signal.

**Note:** To comply with Maximum Permissible Exposure (MPE) requirements, the maximum composite output from the antenna cannot exceed 1000 Watts EIRP and the antenna must be permanently installed in a fixed location that provides at least **6 meters** (20 feet) of separation from all persons.


© 2005, ADC Telecommunications, Inc.

## 2.7 Enter Host Reverse Attenuation

The level of the RF signal that should be input to the EBTS will vary depending on the type of EBTS, the receive distribution, and the number of channels present. To interface with the EBTS, the reverse path signal level must be adjusted to provide the signal level required at the EBTS input port(s). The HU provides from –1 to +30 dB of gain in the reverse path. By default, the host reverse attenuator is set to –31 dB of attenuation which provides –1 dB of gain. Use the following procedure to set the reverse path gain:

1. Check the EBTS manufacturer's specifications to determine the composite signal level required at the reverse path input port(s). Note that 800/900 MHz SMR host units have two reverse path input ports.
2. Determine the overall gain and loss imposed on the signal by the antenna, antenna cable, and by the cables that connect the HU to the EBTS.
3. Determine the amount of gain required to raise the reverse path signal to the level required at the EBTS.
4. Click on the HOST **RF** tab. The HOST **RF** display will open within the EMS main window as shown in Figure 3-10.

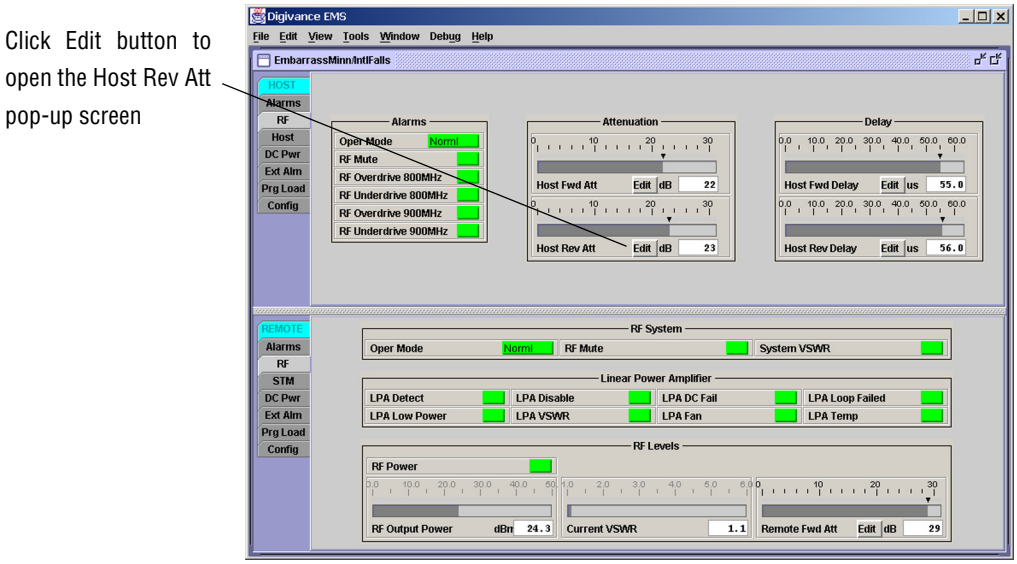


**Figure 3-10. HOST RF Display**

5. Click on the **Host Rev Att** field **Edit** button (see Figure 3-10). The **Host Rev Att** pop-up screen will open as shown in Figure 3-11.


© 2005, ADC Telecommunications, Inc.

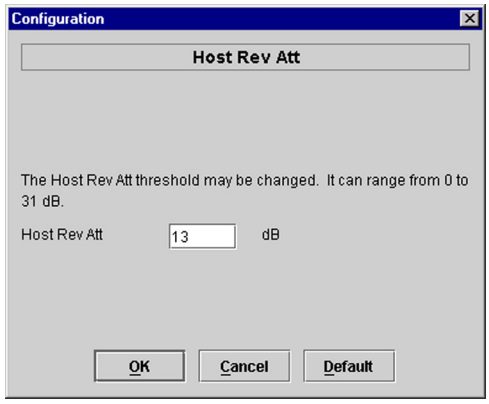


**Figure 3-11. Host Rev Att Pop-Up Screen**

6. Enter the attenuation value that will provide the required gain. Refer to Table 3-2 for the attenuation values and the corresponding gain (nominal) values.
7. Click **OK** to close the pop-up screen and to make the changes take effect.

**Table 3-2. Reverse Path Attenuation Setting and Nominal Gain Provided**

| ATTENUATION SETTING | GAIN PROVIDED | ATTENUATION SETTING | GAIN PROVIDED | ATTENUATION SETTING | GAIN PROVIDED |
|---|---|---|---|---|---|
| 0 dB → | 30 dB | 11 dB → | 19 dB | 22 dB → | 8 dB |
| 1 dB | 29 dB | 12 dB | 18 dB | 23 dB | 7 dB |
| 2 dB | 28 dB | 13 dB | 17 dB | 24 dB | 6 dB |
| 3 dB | 27 dB | 14 dB | 16 dB | 25 dB | 5 dB |
| 4 dB | 26 dB | 15 dB | 15 dB | 26 dB | 4 dB |
| 5 dB | 25 dB | 16 dB | 14 dB | 27 dB | 3 dB |
| 6 dB | 24 dB | 17 dB | 13 dB | 28 dB | 2 dB |
| 7 dB | 23 dB | 18 dB | 12 dB | 29 dB | 1 dB |
| 8 dB | 22 dB | 19 dB | 11 dB | 30 dB | 0 dB |
| 9 dB | 21 dB | 20 dB | 10 dB | 31 dB | –1 dB |
| 10 dB | 20 dB | 21 | 9 dB | | |

## 2.8 Enter Host Forward and Reverse Delay

The forward and reverse delay function allows entry of from 0 to 63 µsec of delay in the forward and reverse paths. This feature is used when multiple systems are used to transport the same channel and there is a significant difference in the path delay between systems. Additional delay may be entered to balance the overall system delay. The amount of delay required must be calculated by the RF engineer and should be included in the system design plan. The default setting is 0 µsec. Use the following procedure to change the forward and reverse path delay:


© 2005, ADC Telecommunications, Inc.

1. Click on the HOST **RF** tab. The HOST **RF** display will open within the EMS main window as shown in Figure 3-12.

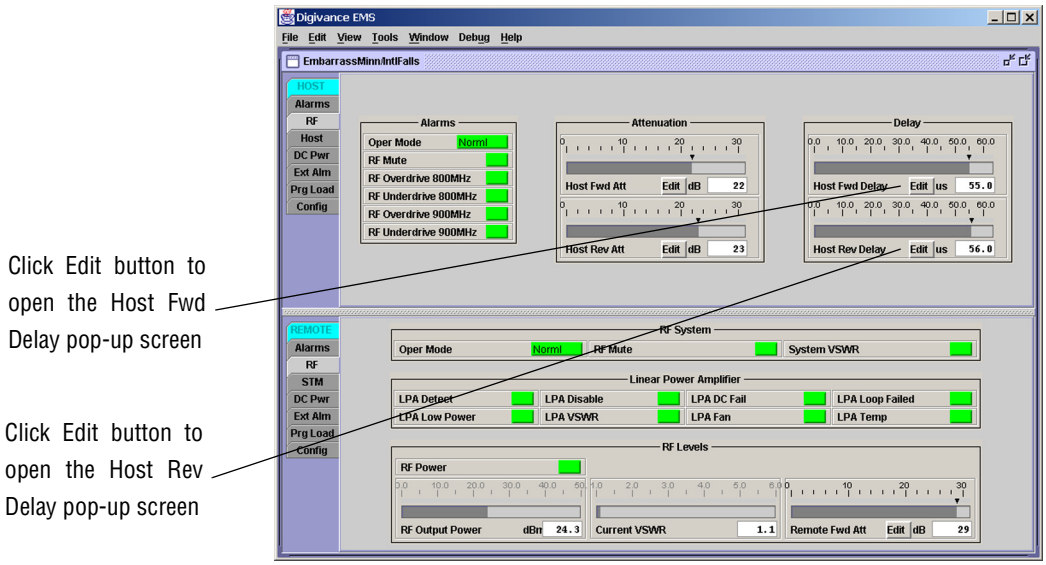


**Figure 3-12. HOST RF Display**

2. Click on the **Host Fwd Delay** field **Edit** button (see Figure 3-12). The **Host Fwd Delay** pop-up screen will open as shown in Figure 3-13.

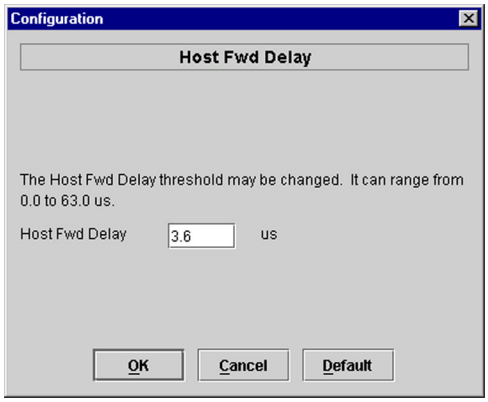


**Figure 3-13. Host Fwd Delay Pop-Up Screen**

3. Obtain the value of the forward delay as specified in the system design plan. The delay is adjustable in 0.1 µsec steps.
4. Enter the forward path delay value and click **OK** to close the pop-up screen and to make the changes take effect.
5. Repeat the process for reverse delay by right-clicking on the appropriate delay section (see Figure 3-12) and then entering the required delay value in the pop-up screen.
6. Click **OK** to close each pop-up screen and to make the changes take effect.


© 2005, ADC Telecommunications, Inc.

# SECTION 4: MAINTENANCE

Content | Page


1 SYSTEM MAINTENANCE OVERVIEW . . . . . 4-1
1.1 Tools and Materials . . . . . 4-1
2 FAULT DETECTION AND ALARM REPORTING . . . . . 4-2
3 FAULT ISOLATION AND TROUBLESHOOTING . . . . . 4-4
3.1 Host Unit Troubleshooting . . . . . 4-5
3.2 RU Troubleshooting . . . . . 4-7
4 TEST PROCEDURES . . . . . 4-11
4.1 Optical Power Test . . . . . 4-11
4.2 Optical Loopback Test . . . . . 4-13
5 SCHEDULED MAINTENANCE REQUIREMENTS . . . . . 4-14


## 1 SYSTEM MAINTENANCE OVERVIEW

This section explains the Digivance system fault detection and alarm reporting system, provides a method for isolating and troubleshooting faults, and provides test procedures. The Digivance system requires minimal regular maintenance to insure continuous and satisfactory operation. The only components that require regular replacement are the HU cooling fans.

Maintenance also includes diagnosing and correcting service problems as they occur. When an alarm is reported, it will be necessary to follow a systematic troubleshooting procedure to locate the problem. Once the source of the problem is isolated, the appropriate corrective action can be taken to restore service. The only internal components that can be replaced are the cooling fans that mount in the HU. The failure of any other internal component will require replacement of the entire unit.

### 1.1 Tools and Materials

The following tools and materials are required in order to complete the maintenance procedures specified in this section:

- IR filtering safety glasses
- Patch cords with SC connectors
- 15 dB in-line SC optical attenuators
- Optical power meter (1550 and 1310 nm)


© 2005, ADC Telecommunications, Inc.

## 2 FAULT DETECTION AND ALARM REPORTING

The Digivance LRCS on-board embedded software detects various unit and system faults which generate ether a Major or Minor alarm. A Major alarm indicates that the system has failed in a way that directly affects RF transport performance. When a major alarm occurs, all RF functions are disabled and the system is out of service. A Minor alarm means that system performance is not affected or in some cases, that the performance may no longer be optimal. When a minor alarm occurs, RF functions continue and the system remains in service.

The following means are used to report Major and Minor alarms:

- HU alarm contacts
- HU and RU LED's
- EMS software Graphical User Interface (GUI)
- Network Operations Center - Network Element Manager (NOC/NEM) interface
- SNMP interface

The HU is equipped with a set of both normally open (NO) and normally closed (NC) alarm contacts which may be used to report both Major and Minor alarms to an external alarm system. The alarm contacts summarize the inputs so that any Major or Minor alarm will trigger an alarm report to the external alarm system.

The HU is equipped with multiple front panel LED indicators that show status and alarm information by displaying various colors: Green, Red, Yellow, and Off. The RU is equipped with a single LED indicator that shows status and alarm information by displaying either Red or Off. A detailed description of the Host Unit and Remote Unit LED indicators is provided respectively in Table 4-1 and Table 4-2.

The EMS software GUI provides both a summary and a detailed list of alarm information that includes unit and module level faults, circuit faults, and measured value faults such as voltages, RF power, and temperature. A summary showing a list of all systems and their current alarm status is presented through the Alarm OverView display. A more detailed list of alarm information is presented through the HOST alarm display and the REMOTE alarm display. The various fault conditions that trigger a major or minor alarm report are shown in the HOST and REMOTE alarm displays.

The NOC/NEM interface provides the same summary and detailed listing of alarm information as the EMS software GUI but in an ASCII text string format. Sending the command GET ALARMSUMMARY produces a list of all systems and their current alarm status. Sending the command GET ALARM ALL for a specific system will produce a detailed list of alarm information for the specified system.

The SNMP interface provides alarm information to up to ten SNMP managers which must be registered with the SNMP agent. The SNMP interface allows the SNMP managers to receive the alarm and status information generated by the host and remote units. The presentation of the alarm information is dependent on the features of the SNMP manager.


© 2005, ADC Telecommunications, Inc.

**Table 4-1. Host Unit LED Indicators**

| INDICATOR | COLOR | DESCRIPTION |
|---|---|---|
| POWER | | **Indicates if the HU is powered or un-powered.** |
| | Green | The DC power source is on. |
| | Off | The DC power source is off. |
| STANDBY | | **Indicates if the system is in the standby, normal, test, or program load mode.** |
| | Green (blinking) | The HU is in the standby mode. |
| | Yellow (blinking) | The HU is in the program load mode. |
| | Red (blinking) | The HU is in the test mode. |
| | Off | The HU is in the normal mode. |
| HOST UNIT | | **Indicates if the HU is normal, over temperature, if an internal fault is detected, or if there is an equipment mis-match.** |
| | Green | The HU is normal. |
| | Yellow | The HU is over temperature or detects an internal fault. |
| | Red | The HU detects an internal fault or HU/RU band mismatch. |
| REMOTE UNIT | | **Indicates if an alarm is detected at the RU.** |
| | Green | No alarms detected at the RU. |
| | Yellow | A minor alarm is detected at the RU. |
| | Red | A major alarm is detected at the RU. |
| DRIVE 851–869<br>DRIVE 935–940 | | **Indicates if the specified forward path RF signal level is normal, above overdrive threshold, or below underdrive threshold.** |
| | Green | The RF signal level is normal |
| | Yellow | The RF signal level is below the underdrive threshold. |
| | Red | The RF signal level is above the overdrive threshold. |
| FWD/REV<br>(PORT 1/PORT 2) | | **Indicates if the reverse path optical signals from the RU are normal, if errors are detected, or if the optical signal is not detected.** |
| | Green | The reverse path optical signals are normal. |
| | Red | Excessive errors (see Note) are detected in the reverse path optical signals or the HU is not receiving a reverse path optical signal. |

Note: Excessive errors means the Bit Error Rate (BER) has exceeded $10^{-6}$ (1 bit error per million bits).

**Table 4-2. Remote Unit LED Indicator**

| INDICATOR | COLOR | DESCRIPTION |
|---|---|---|
| One LED, no designation | | **Indicates if the RU is unpowered, normal, or if an internal fault is detected.** |
| | Off | The RU is unpowered or the RU is normal and no faults are detected. |
| | Red | The RU detects an internal fault, excessive errors (see Note) are detected in the forward path optical signals, or the RU is not receiving a forward path optical signal. |

Note: Excessive errors means the Bit Error Rate (BER) has exceeded $10^{-6}$ (1 bit error per million bits).


© 2005, ADC Telecommunications, Inc.

# 3 FAULT ISOLATION AND TROUBLESHOOTING

Alarm information may be accessed using the HU and RU LED indicators, the EMS software GUI, the NOC-NEM interface, or the SNMP manager. When an alarm occurs, use the unit LED indicator(s) and any one of the specified software tools to determine which Digivance system is affected, which unit (HU or RU) reported the alarm, and the fault that generated the alarm. Then refer to either Section 3.1 Host Unit Troubleshooting or Section 3.2 RU Troubleshooting to isolate the problem and to determine the corrective action required.

When attempting to isolate a problem, always determine the initial fault that generated the alarm report. Some faults may cause additional faults to be reported which tends to obscure the initial reason for the alarm. To help isolate faults, the EMS GUI provides an AlarmOverview screen, shown in Figure 4-1, that indicates which Digivance system/unit is reporting the alarm.

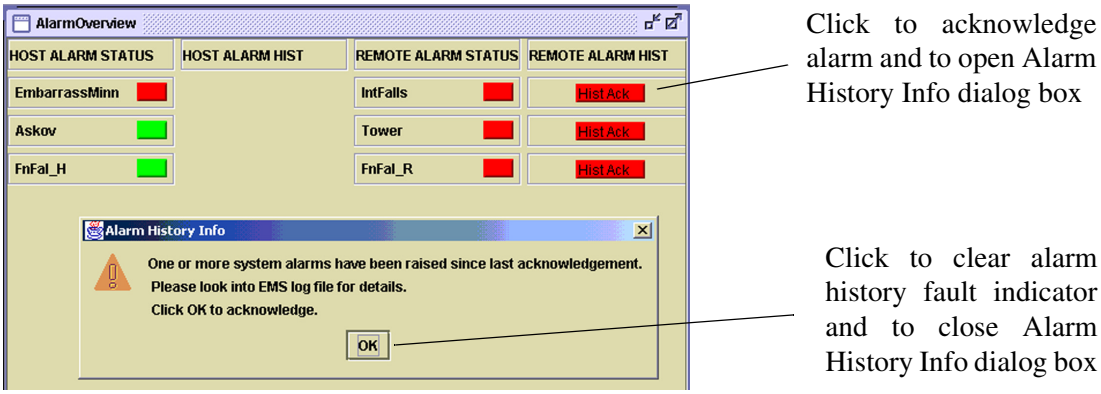


**Figure 4-1. AlarmOverView Screen**

The AlarmOverview screen includes an ALARM HIST indicator which the user should click to acknowledge that an alarm exists. Acknowledging the alarm opens the Alarm History Info dialog box (also shown in Figure 4-1) which directs the user to view the EMS Log file for details. The EMS Log file lists the various faults in the order in which they occurred. Clear each fault starting with the initial fault. In most instances, clearing the initial fault will also clear any remaining faults. For additional information on using the AlarmOverview screen, refer to the Digivance Element Management System Version 3.01 User Manual (ADCP-75-182).

**Note:** It is recommended that if there are alarms at both the HU and RU, the optical faults should be checked and cleared first. Because the HU and RU function as a system, a fault in the fiber optic link will cause alarms to be reported by both the HU and RU.


© 2005, ADC Telecommunications, Inc.

## 3.1 Host Unit Troubleshooting

Use this section to troubleshoot alarms that originate with the Host Unit. When a **Minor** alarm occurs, one (or more) of the Host Unit LED's with turn **yellow** and the EMS software will indicate a minor fault/alarm. When a **Major** alarm occurs, one (or more) of the Host Unit LED's will turn red and the EMS software will indicate a major fault/alarm**.** Locate the LED and the corresponding software fault/status indicator in Table 4-3 and then take the corrective action indicated.

**Table 4-3. Host Unit Fault/Alarm Isolation Diagram**

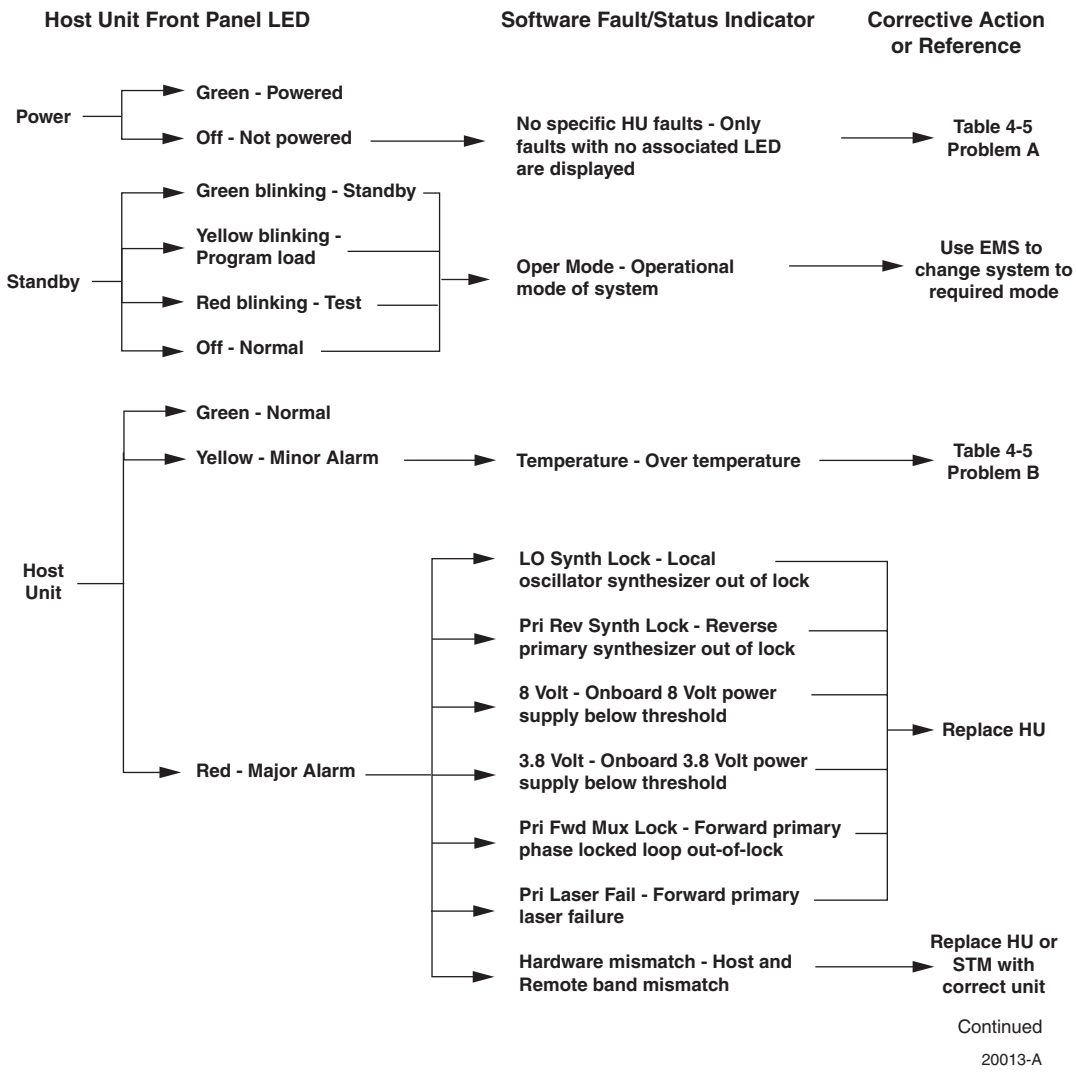



© 2005, ADC Telecommunications, Inc.

## Table 4-3. Host Unit Fault/Alarm Isolation Diagram, continued

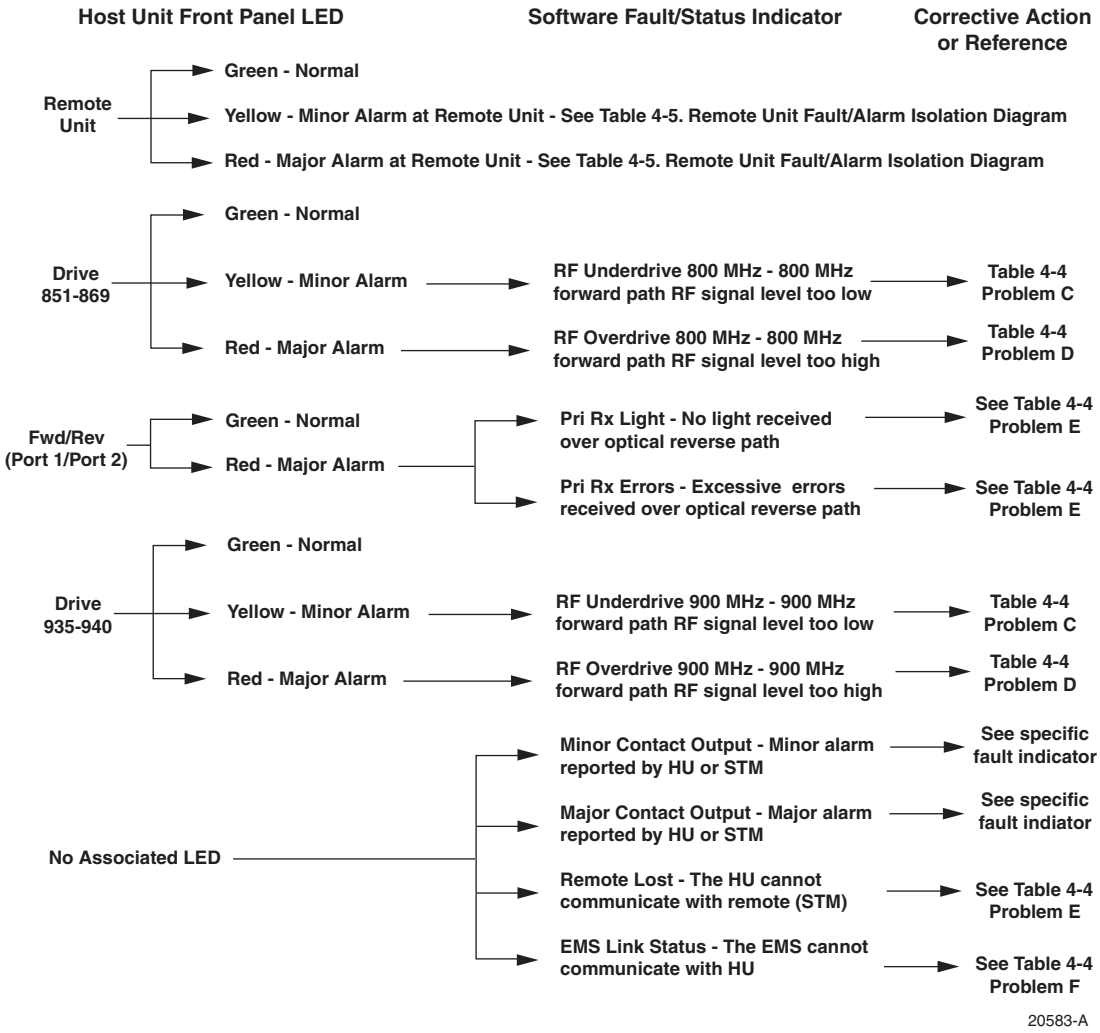


## Table 4-4. Host Unit Fault/Alarm Corrective Action

| PROBLEM A: The HU is not powered. | |
|---|---|
| **POSSIBLE CAUSE** | **CORRECTIVE ACTION/COMMENTS** |
| 1. The HU is turned off. | 1. Place On/Off switch in the On position. |
| 2. The fuse is open/removed from the fuse panel or the DC power has failed. | 2. Check DC power source, repair as needed, and replace or reinstall fuse at fuse panel. |
| **PROBLEM B: The HU is overheating.** | |
| **POSSIBLE CAUSE** | **CORRECTIVE ACTION/COMMENTS** |
| 1. Air intake or exhaust opening to HU chassis is blocked | 1. Remove cause of air-flow blockage. |
| 2. Ambient temperature > 50º C/122º F. | 2. Reduce ambient temperature. |
| 3. Faulty fan. | 3. Replace HU fan (See applicable manual). |
| 4. The HU has failed. | 4. Replace HU. |


© 2005, ADC Telecommunications, Inc.

**Table 4-4. Host Unit Fault/Alarm Corrective Action, continued**

| PROBLEM C: The RF input signal level is below the underdrive threshold. | |
|---|---|
| **POSSIBLE CAUSE** | **CORRECTIVE ACTION/COMMENTS** |
| 1. Composite output signal from EBTS is too low. | 1. Check EBTS composite output signal level and adjust if too low. |
| 2. Faulty coaxial connection between the HU and the EBTS. | 2. Correct EBTS cables if faulty. |
| 3. Incorrect attenuation in forward path RF coaxial link. | 3. Check Host Forward Attenuator setting and adjust if attenuation is too high. |
| **PROBLEM D: The RF input signal is above the overdrive threshold.** | |
| **POSSIBLE CAUSE** | **CORRECTIVE ACTION/COMMENTS** |
| 1. Composite output signal level from EBTS is too high. | 1. Check EBTS composite output signal level and adjust if too high. |
| 2. Incorrect attenuation in forward path RF coaxial link. | 2. Check Forward Attenuator setting and adjust if attenuation is too low. |
| **PROBLEM E: No light received over the reverse path or excessive errors received over the reverse path** | |
| **POSSIBLE CAUSE** | **CORRECTIVE ACTION/COMMENTS** |
| 1. Faulty reverse path optical fiber. | 1. Test optical fiber. Clean connector if dirty. Repair or replace optical fiber if faulty. (See Section 4.1). |
| 2. Faulty optical transmit port at the RU; or faulty optical receive port at the HU | 2. Test HU optical receive port. Replace HU if receive port is faulty. Replace RU if HU receive port is OK. (See Section 4.2) |
| **PROBLEM F: The HU does not respond to control or monitoring commands sent by the EMS.** | |
| **POSSIBLE CAUSE** | **CORRECTIVE ACTION/COMMENTS** |
| 1. The HU is not powered. | 1. See Problem A this table. |
| 2. The cable connection between the HU and the EMS computer is faulty. | 2. Inspect EMS cable and repair or replace if faulty. |
| 3. The CAN cable connections between the HUs in a multiple HU installation are faulty. | 3. Inspect each CAN cable and repair or replace if faulty. |

## 3.2 RU Troubleshooting

Use this section to troubleshoot alarms that originate with the RU. When a **Minor or Major** alarm occurs, the RU LED (no designation) will turn **red** and the EMS software will indicate a minor or major fault/alarm. Use the EMS software to identify the fault and then refer to Table 4-5 to determine the corrective action required.


© 2005, ADC Telecommunications, Inc.

## Table 4-5. Remote Unit Fault/Alarm Isolation Diagram

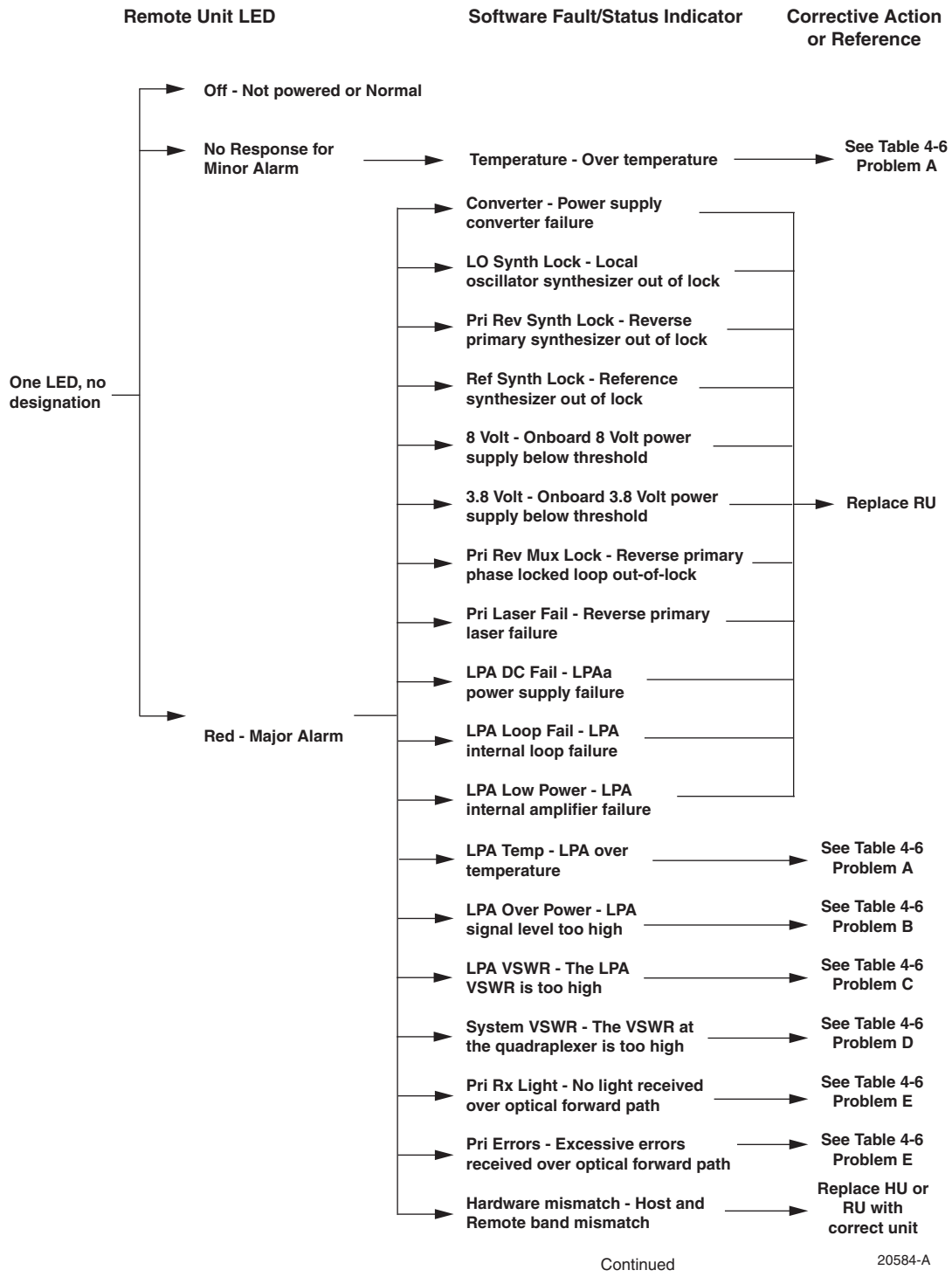


Continued


© 2005, ADC Telecommunications, Inc.

**Table 4-5. Remote Unit Fault/Alarm Isolation Diagram, continued**

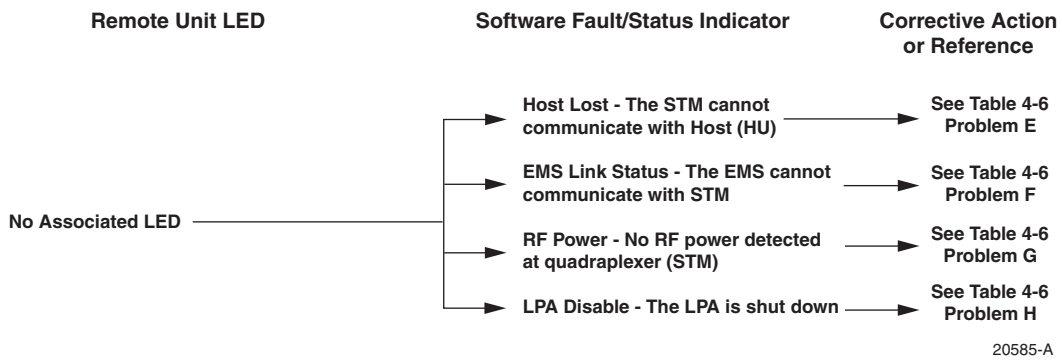


**Table 4-6. Remote Unit Fault/Alarm Corrective Action**

| **PROBLEM A: The RU (STM or LPA) is overheating.** | |
|---|---|
| **POSSIBLE CAUSE** | **CORRECTIVE ACTION/COMMENTS** |
| 1. Debris preventing air from freely circulating around the RU aluminum enclosure. | 1. Remove cause of air-flow blockage. |
| 2. Ambient temperature > 50º C/122º F. | 2. Reduce ambient temperature. |
| 3. The RU has failed. | 3. Replace RU. |
| **PROBLEM B: The output power from the LPA exceeds the maximum rating.** | |
| **POSSIBLE CAUSE** | **CORRECTIVE ACTION/COMMENTS** |
| 1. The power level of the RF forward path composite input signal at the HU is too high. | 1. Check the power level of the RF composite input signal at the HU and adjust to correct level. To reset, use EMS to place Digivance system in standby mode and then place system back in normal mode. |
| 2. The RU (LPA) has failed. | 2. Replace RU. |
| **PROBLEM C: The VSWR at the LPA exceeds the threshold setting of 3:1.** | |
| **POSSIBLE CAUSE** | **CORRECTIVE ACTION/COMMENTS** |
| 1. The antenna cable or antenna cable connectors are faulty. | 1. Inspect antenna cable and connectors and repair or replace as needed.To reset, use EMS to place Digivance system in standby mode and then place system back in normal mode. |
| 2. The antenna or antenna system is faulty. | 2. Check the antenna circuit for shorts or opens (including lightning protector). To reset, use EMS to place Digivance system in standby mode and then place system back in normal mode. |
| 3.The RU quadraplexer or LPA has failed. | 3. Replace RU. |


© 2005, ADC Telecommunications, Inc.

**Table 4-6. Remote Unit Fault/Alarm Corrective Action, continued**

| PROBLEM D: The forward path VSWR is above threshold. | |
|---|---|
| **POSSIBLE CAUSE** | **CORRECTIVE ACTION/COMMENTS** |
| 1. Faulty antenna or antenna system. | 1. Check the antenna system for shorts or opens (including lightning protector). To reset, use EMS to place Digivance system in standby mode and then place system back in normal mode. |
| 2. Faulty antenna cable. | 2. Check the antenna cable for faulty connections. |
| 3. The RU quadraplexer has failed. | 3. Replace the RU. |
| **PROBLEM E: No light received over the forward path or excessive errors received over the forward path** | |
| **POSSIBLE CAUSE** | **CORRECTIVE ACTION/COMMENTS** |
| 1. Faulty forward path optical fiber. | 1. Test optical fiber. Clean connector if dirty. Repair or replace optical fiber if faulty. (See Section 4.1). |
| 2. Faulty optical transmit port at the HU; or faulty optical receive port at the RU. | 2. Test HU optical transmit port. Replace HU if port is faulty. Replace RU if HU transmit port is OK. (see Section 4.2). |
| **PROBLEM F: The RU does not respond to control or monitoring commands sent by the EMS.** | |
| **POSSIBLE CAUSE** | **CORRECTIVE ACTION/COMMENTS** |
| 1. The cable connection between the HU and the EMS computer is faulty. | 1. Inspect EMS cable and repair or replace if faulty. |
| **PROBLEM G: No RF power is detected at the RU quadraplexer.** | |
| **POSSIBLE CAUSE** | **CORRECTIVE ACTION/COMMENTS** |
| 1. No RF power is being input to the HU or the RF input signal level at the HU is too low. | 1. Check the RF input power level at the HU and adjust until within specifications. |
| 2. The RU (LPA) is faulty. | 2. Replace RU. |
| **PROBLEM H: The RF output form the RU (LPA) is shut down.** | |
| **POSSIBLE CAUSE** | **CORRECTIVE ACTION/COMMENTS** |
| 1. The LPA is in the forced shutdown mode. | 1. Check for fault conditions that will cause a major alarm. Correct faults as required. To reset, use EMS to place Digivance system in standby mode and then place system back in normal mode |
| 2. The RU (LPA) is faulty. | 2. Replace RU. |


© 2005, ADC Telecommunications, Inc.

# 4 TEST PROCEDURES

This section provides procedures for common troubleshooting and maintenance tests. Refer to these procedures as needed when specified in the Fault/Alarm Isolation Diagrams in Section 3.

## 4.1 Optical Power Test

A break in an optical fiber or a fault with the optical connector will interrupt communications between linked components or generate excessive errors. Use the following procedure to isolate a problem with an optical fiber or connector.

**Danger:** *This equipment uses a Class 1 Laser according to FDA/CDRH rules. Laser radiation can seriously damage the retina of the eye. Do not look into the ends of any optical fiber. Do not look directly into the optical transmitter of any unit or exposure to laser radiation may result. An optical power meter should be used to verify active fibers. A protective cap or hood MUST be immediately placed over any radiating transmitter or optical fiber connector to avoid the potential of dangerous amounts of radiation exposure. This practice also prevents dirt particles from entering the connector.*

1. Put on the IR filtering safety glasses.
2. Notify the NOC or alarm monitoring system operator that the system is going offline.
3. At the HU, place the On/Off switch in the **OFF** position (press **0**). At the RU, place the AC circuit breaker switch in the open (OFF) position.

**Note:** Turning off the HU and RU disables the respective lasers which is necessary in order to safely inspect and clean the optical connectors.

4. Disconnect the optical fiber connectors for the fiber to be tested at the HU **and** the RU.
5. Inspect the optical connectors. Verify that connectors are clean and that no scratches or imperfections are visible on the fiber end. Clean and polish the optical connectors if necessary.
6. Connect the optical power meter to the **output** (receiver) end of the optical fiber as shown in Figure 4-2. If an attenuator was included in the fiber link, make sure it is installed.

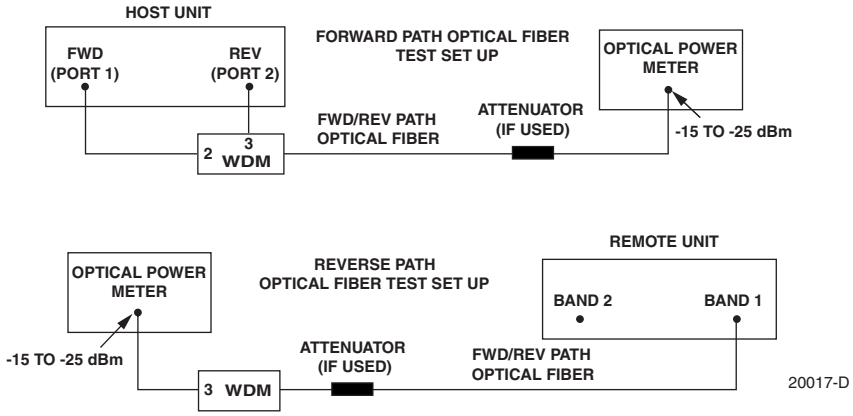


**Figure 4-2. Forward and Reverse Path Optical Fiber Test Set Up**


© 2005, ADC Telecommunications, Inc.

7. Connect the **input** (transmitter) end of the optical fiber to the **transmitting** HU or RU.
8. If the **transmitting** unit is the HU, place the On/Off switch in the **ON** position (press **I**). If the **transmitting** unit is the RU, close (turn on) the AC circuit breaker switch.
9. Using the **transmitting** HU or RU as an optical light source, measure the optical power at the **receiver** end of the optical fiber. The power level of the optical signal received at the HU or RU should be within **–15 to –25 dBm** (with attenuator installed) with –17 dBm recommended for commissioning. If the power level of the received optical signal is within this range, the optical fiber and the far end unit are good. If the power level of the signal is greater than –15 dBm, insert additional attenuation to bring the signal level within the specified range. If the power level is less than –25 dBm, the value of the external attenuator is too high, the optical fiber is faulty, or the far end unit optical transmitter is faulty. Continue with test procedure to isolate the problem

**Caution:** *Erratic operation may occur with an optical input signal level of –13 dBm or higher. If the optical input signal level exceeds –9 dBm, the optical receiver may be damaged.*

10. If the **transmitting** unit is the HU, place the On/Off switch in the **OFF** position (press **O**). If the **transmitting** unit is the RU, open (turn off) the AC circuit breaker switch.
11. Disconnect the optical power meter from the **receiver** end of the optical fiber.
12. Use a 1 meter patch cord to connect the optical power meter to the **transmitting** HU or RU as shown in Figure 4-3.

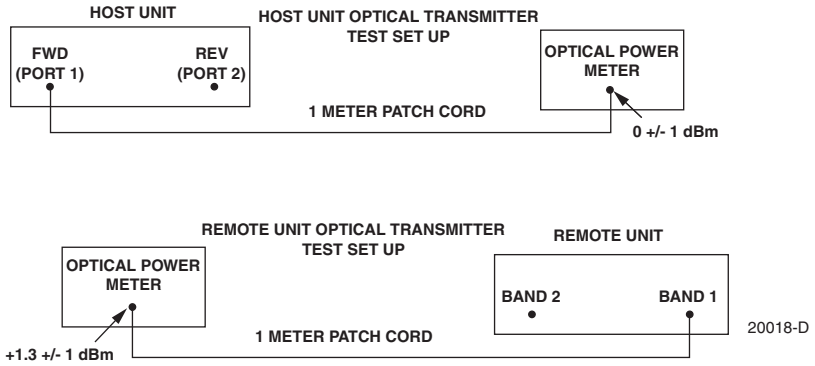


**Figure 4-3. Host Unit and Remote Unit Optical Transmitter Test Set Up**

13. If the **transmitting** unit is the HU, place the On/Off switch in the **ON** position (press **I**). If the **transmitting** unit is the RU, close (turn on) the AC circuit breaker switch.
14. Measure the optical output power of the **transmitting** HU or RU. The power level of the optical output signal from the HU or RU must meet the following specification:

    Forward Path Signal at the HU: 0 ± 1 dBm

    Reverse Path Signal at the RU: +1.3 ± 1 dBm

    If the power level of the optical output signal is within specifications with a 1 meter patch cord installed, the fiber optic link is faulty. If the power level of the optical signal is not within specifications, the far end HU or RU optical transmitter is faulty.


© 2005, ADC Telecommunications, Inc.

15. If the **transmitting** unit is the HU, place the On/Off switch in the **OFF** position (press **0**). If the **transmitting** unit is the RU, open (turn off) the AC circuit breaker switch.
16. Disconnect the optical power meter from the **receiver** end of the optical fiber.
17. Reconnect the optical fibers to the **receiving** HU or RU.
18. Repeat steps 3 through 17 for each optical fiber that requires testing.
19. When ready to put the system back into service, place the On/Off switch on the HU in the **ON** position (press **I**) and close (turn on) the AC circuit breaker switch for the RU.
20. Notify the NOC or alarm monitoring service that the system is going back online.

## 4.2 Optical Loopback Test

The following procedure provides a test to determine if an optical port fault exists with the Host Unit.

**Note:** Because the RU is equipped with a WDM, the optical loopback test cannot be performed on the RU.

**Danger:** *This equipment uses a Class 1 Laser according to FDA/CDRH rules. Laser radiation can seriously damage the retina of the eye. Do not look into the ends of any optical fiber. Do not look directly into the optical transmitter of any unit or exposure to laser radiation may result. An optical power meter should be used to verify active fibers. A protective cap or hood MUST be immediately placed over any radiating transmitter or optical fiber connector to avoid the potential of dangerous amounts of radiation exposure. This practice also prevents dirt particles from entering the connector.*

1. Put on the IR filtering safety glasses.
2. Notify the NOC or alarm monitoring system operator that the system is going offline.
3. Place the On/Off switch in the **OFF** position (press **0**).
4. Disconnect the optical fiber connectors from the FWD (PORT 1) and REV (PORT 2) optical ports and place a dust cap over each connector.
5. Plug a 15 dB in-line optical attenuator into the FWD (PORT 1) optical port as shown in Figure 4-4.

**Caution:** *The optical receiver can be damaged if the power level of the optical input signal is too high. To avoid damaging the optical receiver when performing the loopback test, always install a 15 dB in-line attenuator in the optical receiver circuit.*

6. Connect a 1 meter patch cord between the optical attenuator and the REV (PORT 2) optical port.
7. Place the On/Off switch in the **ON** position (press **I**).


© 2005, ADC Telecommunications, Inc.

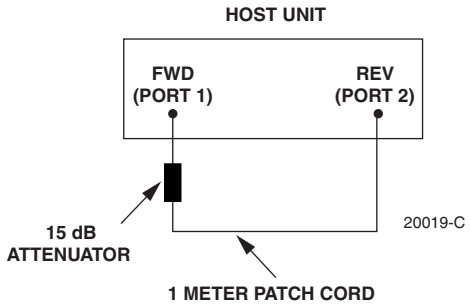


**Figure 4-4. Host Unit Loopback Test**

8. Observe the FWD/REV (PORT 1/PORT 2) LED indicator which will turn either red or green. If the LED turns red, either the FWD (PORT 1) optical transmitter or the REV (PORT 2) receiver is faulty. If the LED turns green, both the FWD (PORT 1) and the REV (PORT 2) optical ports are good.
9. Place the On/Off switch in the **OFF** position (press **0**).
10. Remove the dust caps from the optical fiber connectors.
11. Clean each connector (follow connector supplier's recommendations) and then insert each connector into the appropriate optical port.
12. When ready to put the HU back into service, place the On/Off switch in the **ON** position (press **I**).
13. Notify the NOC or alarm monitoring service that the system is going back online.

## 5 SCHEDULED MAINTENANCE REQUIREMENTS

The only scheduled maintenance required for the SCS system is to remove and replace the HU cooling fans. This should be done at 60 month intervals. Refer to the Digivance LRCS 800/900 MHz SMR System Rear Access Host Unit Installation and Maintenance Manual (ADCP-75-180) for the procedure.


© 2005, ADC Telecommunications, Inc.

# SECTION 5: GENERAL INFORMATION

Content | Page


1 WARRANTY/SOFTWARE . . . . . 5-1
2 SOFTWARE SERVICE AGREEMENT . . . . . 5-1
3 REPAIR/EXCHANGE POLICY . . . . . 5-1
4 REPAIR CHARGES . . . . . 5-2
5 REPLACEMENT/SPARE PRODUCTS . . . . . 5-2
6 RETURNED MATERIAL . . . . . 5-2
7 CUSTOMER INFORMATION AND ASSISTANCE . . . . . 5-3


## 1 WARRANTY/SOFTWARE

The Product and Software warranty policy and warranty period for all ADC Products is published in ADC's Warranty/Software Handbook. Contact the Technical Assistance Center at 1-800-366-3891, extension 73476 (in U.S.A. or Canada) or 952-917-3476 (outside U.S.A. and Canada) for warranty or software information or for a copy of the Warranty/Software Handbook.

## 2 SOFTWARE SERVICE AGREEMENT

ADC software service agreements for some ADC Products are available at a nominal fee. Contact the Technical Assistance Center at 1-800-366-3891, extension 73476 (in U.S.A. or Canada) or 952-917-3476 (outside U.S.A. and Canada) for software service agreement information.

## 3 REPAIR/EXCHANGE POLICY

All repairs of ADC Products must be done by ADC or an authorized representative. Any attempt to repair or modify ADC Products without written authorization from ADC voids the warranty.

If a malfunction cannot be resolved by the normal troubleshooting procedures, call the Technical Assistance Center at 1-800-366-3891, extension 73476 (in U.S.A. or Canada) or 952-917-3476 (outside U.S.A. and Canada). A telephone consultation can sometimes resolve a problem without the need to repair or replace the ADC Product.

If, during a telephone consultation, ADC determines the ADC Product needs repair, ADC will authorize the return of the affected Product for repair and provide a Return Material Authorization number and complete return shipping instructions. If time is critical, ADC can arrange to ship the replacement Product immediately. In all cases, the defective Product must be carefully packaged and returned to ADC.


© 2005, ADC Telecommunications, Inc.

## 4 REPAIR CHARGES

If the defect and the necessary repairs are covered by the warranty, and the applicable warranty period has not expired, the Buyer's only payment obligation is to pay the shipping cost to return the defective Product. ADC will repair or replace the Product at no charge and pay the return shipping charges.

Otherwise, ADC will charge a percentage of the current Customer Product price for the repair or NTF (No Trouble Found). If an advance replacement is requested, the full price of a new unit will be charged initially. Upon receipt of the defective Product, ADC will credit Buyer with 20 percent of full price charged for any Product to be Out-of-Warranty. Products must be returned within thirty (30) days to be eligible for any advance replacement credit. If repairs necessitate a visit by an ADC representative, ADC will charge the current price of a field visit plus round trip transportation charges from Minneapolis to the Buyer's site.

## 5 REPLACEMENT/SPARE PRODUCTS

Replacement parts, including, but not limited to, button caps and lenses, lamps, fuses, and patch cords, are available from ADC on a special order basis. Contact the Technical Assistance Center at 1-800-366-3891, extension 73476 (in U.S.A. or Canada) or 952-917-3476 (outside U.S.A. and Canada) for additional information.

Spare Products and accessories can be purchased from ADC. Contact Sales Administration at 1-800-366-3891, extension 73000 (in U.S.A. or Canada) or 1-952-938-8080 (outside U.S.A. and Canada) for a price quote and to place your order.

## 6 RETURNED MATERIAL

Contact the ADC Product Return Department at 1-800-366-3891, extension 73748 (in U.S.A. or Canada) or 952-917-3748 (outside U.S.A. and Canada) to obtain a Return Material Authorization number prior to returning an ADC Product.

All returned Products must have a Return Material Authorization (RMA) number clearly marked on the outside of the package. The Return Material Authorization number is valid for 90 days from authorization.


© 2005, ADC Telecommunications, Inc.

# 7 CUSTOMER INFORMATION AND ASSISTANCE

**PHONE:**

**EUROPE**
Sales Administration: +32-2-712-65 00
Technical Assistance: +32-2-712-65 42

**EUROPEAN TOLL FREE NUMBERS**

| | |
|---|---|
| Germany: | 0180 2232923 |
| UK: | 0800 960236 |
| Spain: | 900 983291 |
| France: | 0800 914032 |
| Italy: | 0800 782374 |

**U.S.A. OR CANADA**
Sales: 1-800-366-3891 Extension 73000
Technical Assistance: 1-800-366-3891
- Connectivity Extension 73475
- Wireless Extension 73476

**ASIA/PACIFIC**
Sales Administration: +65-6294-9948
Technical Assistance: +65-6393-0739

**ELSEWHERE**
Sales Administration: +1-952-938-8080
Technical Assistance: +1-952-917-3475

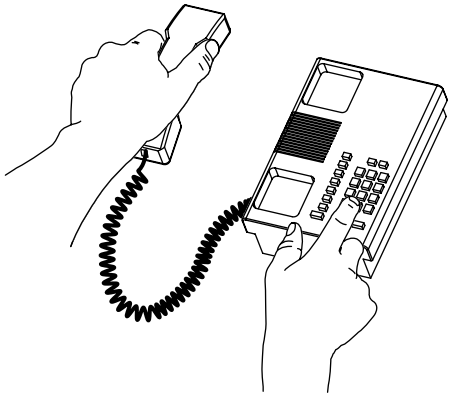

**WRITE:**

**ADC TELECOMMUNICATIONS, INC**
**PO BOX 1101,**
**MINNEAPOLIS, MN 55440-1101, USA**

**ADC TELECOMMUNICATIONS (S'PORE) PTE. LTD.**
**100 BEACH ROAD, #18-01, SHAW TOWERS.**
**SINGAPORE 189702.**

**ADC EUROPEAN CUSTOMER SERVICE, INC**
**BELGICASTRAAT 2,**
**1930 ZAVENTEM, BELGIUM**

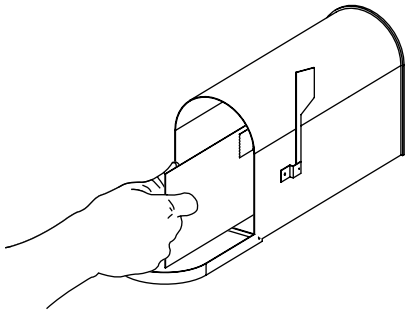

**PRODUCT INFORMATION AND TECHNICAL ASSISTANCE:**

**connectivity.tac@adc.com**

**wireless.tac@adc.com**

**euro.tac@adc.com**

**asiapacific.tac@adc.com**

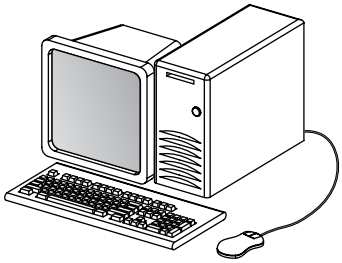

13944-M

**Contents herein are current as of the date of publication. ADC reserves the right to change the contents without prior notice. In no event shall ADC be liable for any damages resulting from loss of data, loss of use, or loss of profits and ADC further disclaims any and all liability for indirect, incidental, special, consequential or other similar damages. This disclaimer of liability applies to all products, publications and services during and after the warranty period. This publication may be verified at any time by contacting ADC's Technical Assistance Center.**

© 2005, ADC Telecommunications, Inc.
All Rights Reserved
Printed in U.S.A

*Blank*

www.adc.com