FCC ID: F8I-DVICS1900-1

ADCP-75-110
Issue 2B
July 2001

Digivance™
800/1900 MHz Indoor Coverage Solution
Installation and Operation Manual

DRAFT

1175170 Rev A

COPYRIGHT

© 2001, ADC Telecommunications, Inc.
All Rights Reserved
Printed in the U.S.A.

REVISION HISTORY

ISSUE	DATE	REASON FOR CHANGE
Issue 1	04/2001	Original
Issue 2	06/2001	Changes in LED operation, new power cable maximum length recommendations, and update to specifications table
Issue 2B	07/2001	Updated to cover 1900 MHz version of product

TRADEMARK INFORMATION

ADC and FiberGuide are registered trademarks of ADC Telecommunications, Inc.

Digivance is a trademark of ADC Telecommunications, Inc.

LC is a trademark of Lucent Technologies Inc.

TORX is a registered trademark of Textron, Inc.

DISCLAIMER OF LIABILITY

Contents herein are current as of the date of publication. ADC reserves the right to change the contents without prior notice**. In no event shall ADC be liable for any damages resulting from loss of data, loss of use, or loss of profits and ADC further disclaims any and all liability for indirect, incidental, special, consequential or other similar damages. This disclaimer of liability applies to all products, publications and services during and after the warranty period.**

This publication may be verified at any time by contacting ADC's Technical Assistance Center at 1-800-366-3891, extension 63475 (in U.S.A. or Canada) or 952-946-3475 (outside U.S.A. and Canada), or by e-mail to bcg_tac@adc.com.

ADC Telecommunications, Inc.
P.O. Box 1101, Minneapolis, Minnesota 55440-1101
In U.S.A. and Canada: 1-800-366-3891
Outside U.S.A. and Canada: (952) 938-8080
Fax: (952) 946-3292

TABLE OF CONTENTS

Content	Page
1 SYSTEM FUNCTIONAL OVERVIEW AND UNIT DESCRIPTIONS	1
1.1 System Functional Overview	1
1.2 Digital Host Unit Description	3
1.3 Digital Remote Unit Description	7
1.4 Digital Expansion Unit Description	9
1.5 Terms and Definitions	12
1.6 Specifications	13
2 INSTALLATION PLANNING AND SYSTEM DESIGN	16
2.1 Base Station Interface Requirements	16
2.2 Locating and Mounting Requirements	18
2.3 Powering Requirements	19
2.4 Optical Options and Requirements	20
2.5 Coaxial Cable Requirements	20
2.6 System Expansion Planning	20
2.7 DRU Antenna Options	21
2.8 External Alarm System Reporting Requirements	23
2.9 Frequency Band Selection Requirements (1900 Mhz)	23
2.10 Maintenance Requirements	24
2.11 System Design Recommendations	24
3 DIGITAL HOST UNIT INSTALLATION PROCEDURE	27
3.1 System Plan Review and Pre-Installation Cable Routing	27
3.2 Tools and Materials	27
3.3 Unpacking and Inspection	28
3.4 Frequency Band Selection Procedure (1900 Mhz DHU Only)	28
3.5 Mounting Procecure	29
3.6 Chassis Ground Procedure	32
3.7 Coaxial Cable Connections	33
3.8 Ports 1–6 Optical Connections	34
3.9 DC Power Connections	35
3.10 Exterma; Alarm System Connections	37
3.11 AC Power Connections	38
3.12 Create As-Built Drawing	39
4 SYSTEM OPERATION	40
4.1 Tools and Materials	40
4.2 Turn-Up System and Verify Operation	40
4.3 Correct Installation Problems	43
4.4 Test System Performance	45
5 SYSTEM MAINTENANCE PROCEDURES	46
5.1 Tools and Materials	46
5.2 Fault Detection and Alarm Reporting	46

(continued)

© 2001, ADC Telecommunications, Inc.

TABLE OF CONTENTS

Content	Page
5.3 Fault Isolation and Troubleshooting	47
5.4 Test Procedures	50
5.5 DHU or DEU Fan Replacement	54
6 GENERAL INFORMATION	57
6.1 Warranty/Software	57
6.2 Software Service Agreement	57
6.3 Repair/Exchange Policy	57
6.4 Repair Charges	57
6.5 Replacement/Spare Products	58
6.6 Returned Material	58
6.7 Customer Information and Assistance	58

© 2001, ADC Telecommunications, Inc.

ABOUT THIS GUIDE

This installation and operation manual provides the following information:

- An overview of the Digivance Indoor Coverage Solution (ICS) and a description of the basic system components including the Digital Host Unit (DHU), Digital Expansion Unit (DEU), and the Digital Remote Unit (DRU).
- System requirements for planning the Digivance ICS installation.
- Procedures for installing the DHU.
- Procedures for operating and maintaining the Digivance ICS.
- Product warranty, repair, return, and replacement information

The procedures for installing the DEU and DRU are provided in other publications which are referenced in the Related Publications section and at appropriate points within this manual.

RELATED PUBLICATIONS

Listed below are related manuals and their publication numbers. Copies of these publications can be ordered by contacting the ADC Technical Assistance Center at 1-800-366-3891 (in U.S.A. or Canada) or 952-946-3000, extension 63475 (outside U.S.A. and Canada).

Title/Description	ADCP Number
Digivance ICS Digital Expansion Unit Installation Instructions Provides a description of the DEU and procedures for installing the DEU.	**75-111**
Digivance ICS Digital Remote Unit Installation Instructions Provides a description of the DRU and procedures for installing the DRU.	**75-112**
Digivance ICS Local Interface Unit User Manual Provides a description of the LIU and procedures for installing the LIU.	**75-113**
Digivance ICS Remote Interface Unit User Manual Provides a description of the RIU and procedures for installing the RIU.	**75-114**

© 2001, ADC Telecommunications, Inc.

ADMONISHMENTS

Important safety admonishments are used throughout this manual to warn of possible hazards to persons or equipment. An admonishment identifies a possible hazard and then explains what may happen if the hazard is not avoided. The admonishments — in the form of Dangers, Warnings, and Cautions — must be followed at all times. These warnings are flagged by use of the triangular alert icon (seen below), and are listed in descending order of severity of injury or damage and likelihood of occurrence.

⚠ **Danger**: *Danger is used to indicate the presence of a hazard that* ***will*** *cause severe personal injury, death, or substantial property damage if the hazard is not avoided.*

⚠ **Warning**: *Warning is used to indicate the presence of a hazard that* ***can*** *cause severe personal injury, death, or substantial property damage if the hazard is not avoided.*

⚠ **Caution**: *Caution is used to indicate the presence of a hazard that* ***will*** *or* ***can*** *cause minor personal injury or property damage if the hazard is not avoided.*

GENERAL SAFETY PRECAUTIONS

The following general admonishments apply throughout the procedures in this manual.

⚠ **Warning**: *Wet conditions increase the potential for receiving an electrical shock when installing or using electrically-powered equipment. To prevent electrical shock, never install or use electrical equipment in a wet location or during a lightning storm.*

⚠ **Warning**: *The DRU is powered by 48 VDC power which is supplied over customer-provided wiring. To prevent electrical shock when installing or modifying the DRU power wiring, disconnect the wiring at the power source before working with uninsulated wires or terminals.*

⚠ **Danger**: *This equipment uses a Class 1 Laser according to FDA/CDRH rules. Laser radiation can seriously damage the retina of the eye. Do not look into the ends of any optical fiber. Do not look directly into the optical adapters of any digital unit or exposure to laser radiation may result. An optical power meter should be used to verify active fibers. A protective cap or hood MUST be immediately placed over any radiating adapter or optical fiber connector to avoid the potential of dangerous amounts of radiation exposure. This practice also prevents dirt particles from entering the adapter or connector*

⚠ **Danger**: *Do not look into the ends of any optical fiber. Exposure to laser radiation may result. Do not assume laser power is turned-off or the fiber is disconnected at the other end.*

⚠ **Danger**: *Always allow sufficient fiber length to permit routing without severe bends. Fibers may be permanently damaged if bent/curved to a radius of less than 2 inches (50 mm).*

© 2001, ADC Telecommunications, Inc.

STANDARDS CERTIFICATION

FCC: This equipment complies with the applicable sections of Title 47 CFR Parts 15, 22, 24, and 90.

UL/CUL: This equipment complies with UL and CUL 1950 Standard for Safety for Information Technology Equipment, Including Electrical Business Equipment.

FDA/CDRH: This equipment uses a Class 1 LASER according to FDA/CDRH Rules. This product conforms to all applicable standards of 21 CFR Part 1040.

LIST OF ACRONYMS AND ABBREVIATIONS

The acronyms and abbreviations used in this manual are detailed in the following list:

A	Amperes
AC	Alternating Current
AGC	Automatic Gain Control
AMPS	Advanced Mobile Phone Service
CDMA	Code Division Multiple Access
CDRH	Center for Devices and Radiological Health
CUL	Canadian Underwriters Laboratories
DAS	Distributed Antenna System
DC	Direct Current
DEU	Digital Expansion Unit
DHU	Digital Host Unit
DRU	Digital Remote Unit
EIA	Electronic Industries Association
ERP	Effective Radiated Power
ESD	Electrostatic Discharge
FCC	Federal Communications Commission
FDA	Food and Drug Administration
ICS	Indoor Coverage Solution
LIU	Local Interface Unit
NOC	Network Operations Center
PWR	Power
RIU	Remote Interface Unit
RF	Radio Frequency
RSSI	Received Signal Strength Indication
RX	Receive or Receiver
TDMA	Time Division Multiple Access
TX	Transmit or Transmitter
UL	Underwriters Laboratories
UPS	Uninterruptible Power Supply
V	Volts
VAC	Volts Alternating Current
VDC	Volts Direct Current
WECO	Western Electric Company

© 2001, ADC Telecommunications, Inc.

1 SYSTEM FUNCTIONAL OVERVIEW AND UNIT DESCRIPTION

This section provides an overview of the Digivance Indoor Coverage Solution (ICS), a description of the functions and features provided by the units that comprise the system, a listing of terms used and their definition, and a table of specifications.

1.1 System Functional Overview

The Digivance ICS is a digitally distributed antenna system that provides in-building coverage for analog (AMPS) or digital (TDMA or CDMA) cellular phone systems operating within the 800 and 1900 MHz frequency bands. Large buildings typically interfere with the transmission or reception of cellular phone system signals by imposing high attenuation losses on RF signals. The Digivance ICS is designed to overcome the attenuation losses that make cellular communications within buildings or structures difficult or impossible. With the Digivance ICS, cellular phone RF signals can be distributed to the interior areas of any building or structure to eliminate dead spots and improve reception.

1.1.1 Basic System Components

The basic components of the Digivance ICS and their functions are shown in Figure 1. The basic system consists of the Digital Host Unit (DHU), Digital Remote Unit (DRU), and when additional capacity or longer fiber runs are required, the Digital Expansion Unit (DEU). In addition, two accessory items, the Local Interface Unit (LIU) and the Remote Interface Unit (RIU) may be used as needed to interface the DHU with the cellular system Base Transceiver Station (BTS).

1.1.2 Interface With BTS

The DHU interfaces, either locally or remotely, with the BTS. As referenced in this publication, the BTS could be either a microcell or a cell site base station. When the BTS (microcell) is co-located with the DHU, a local interface over coaxial cable is possible. An interface device, such as the LIU, may be required to provide the proper input and output RF signal levels between the BTS and the DHU. When the BTS (cell site base station) is not co-located with the DHU, a remote interface using a donor antenna is required. An interface device such as the RIU is required to provide the proper input and output RF signal levels between the donor antenna and the DHU.

The DHU interfaces, as described in the preceding paragraph, with the BTS. In the forward path, the DHU receives RF signals from the BTS. The DHU digitizes the RF signals and then converts them to digital optical signals for transport to the DEUs and DRUs. In the reverse path, the DHU receives digital optical signals from the DRUs and DEUs. The DHU converts the optical signals back to the original RF signal format for transmission to the BTS.

© 2001, ADC Telecommunications, Inc.

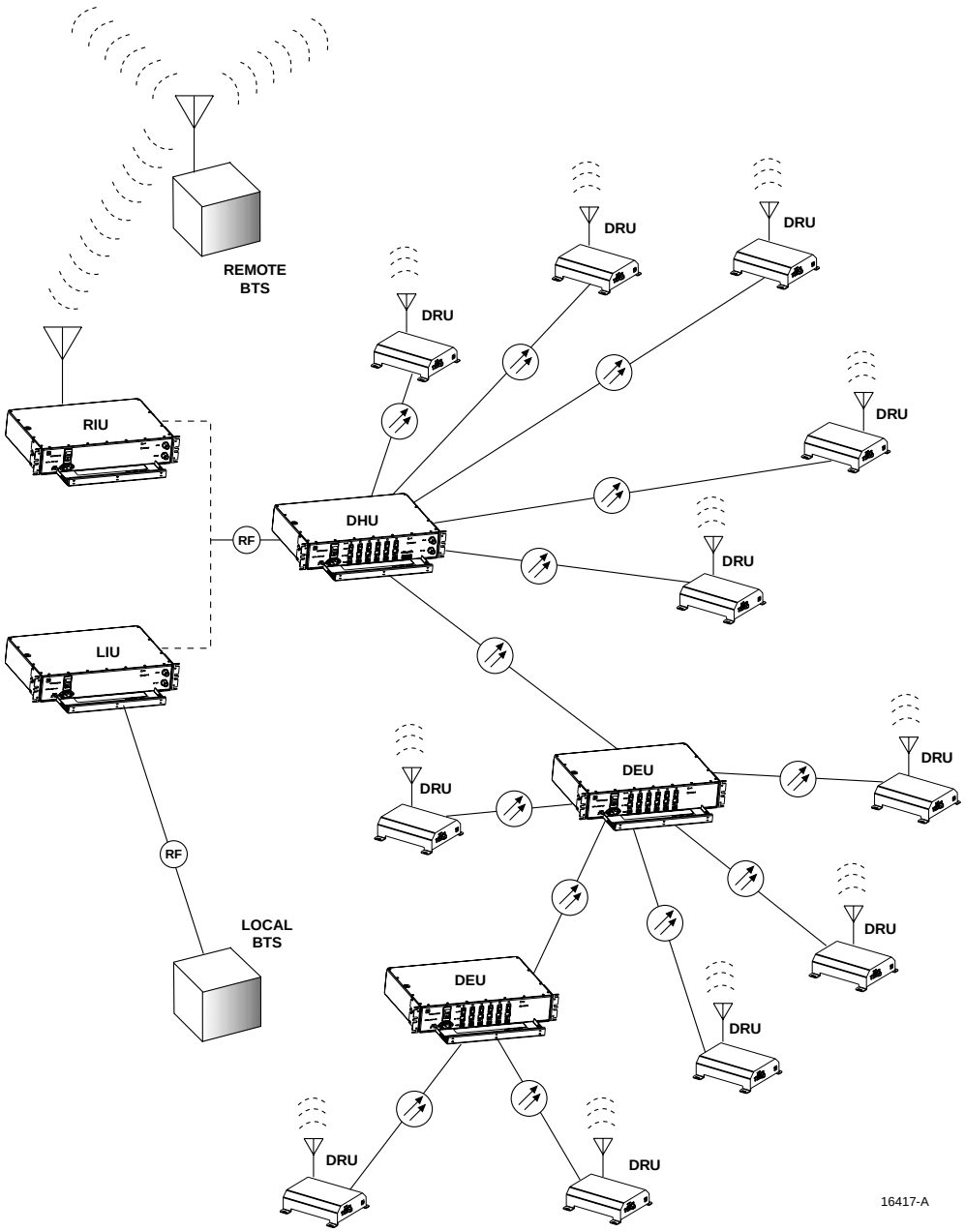

Figure 1. System Overview Functional Block Diagram

1.1.3 Interface With Cellular Phones

The DRUs interface with the cellular phones. In the reverse path, the DRU receives RF signals from each cellular phone. The DRU digitizes the RF signals and then converts them to digital optical signals for transport to the DHU. In the forward path, the DRU receives digital optical signals from the DHU. The DRU converts the optical signals back to the original RF signal format for transmission to the cellular phones. A small antenna is connected to the DRU to transmit and receive RF signals from the cellular phones.

© 2001, ADC Telecommunications, Inc.

1.1.4 Digital Fiber Optic Transport

The DHU is connected to each DRU unit over a pair of multi-mode fiber optic links. One link is used to transport the forward path optical signal. The other link is used to transport the reverse path optical signal. Because the optical signal is digital, no adjustments to the optical signal level are required at the DRU or the DHU regardless of the length of the optical link. Either 50 or 62.5 micron core multi-mode fiber optic cable may be used for the optical link. If 50 micron cable is used, the optical link may be up to 750 meters in length. If 62.5 micron core cable is used, the optical link may be up to 500 meters in length. The fiber optic links are terminated with LC connectors.

1.1.5 Capacity for Expansion and Extended Runs

The DEU enables 6-way expansion of any optical port. This makes it possible to add more DRUs without having to install additional DHUs. Each DHU is equipped with six optical ports. If more than six DRUs are required by the application, a DEU may be connected to one of the optical ports at the DHU which expands that port to six ports. If still more optical ports are required, then a second DEU may be connected to the DHU or a second DEU may be connected to the first DEU. The ability to cascade DEU's in parallel or in series provides unlimited flexibility. It is physically possible to connect an unlimited number DRUs to the DHU through the installation of DEUs. The maximum number of DRUs that can connected to the DHU is limited only by the cumulative noise effect caused by antenna combining.

1.1.6 Power Requirements

The DHU, DEU, LIU, and RIU are each powered by 120–240 Vac (50–60 Hz) power which is supplied through a standard three-conductor AC power cord. The DRU is powered by 34–48 Vdc which is supplied by either the DHU, DEU, or an ac/dc wall-mount style converter. When the DRU is powered by the DHU or DEU, the power is fed through a category 3 or 5 cable terminated with male RJ-45 connectors.

1.1.7 Fault Detection and Alarm Reporting

LED indicators are provided on the front panel of the various units to indicate if the system is normal or if a fault is detected. In addition, normally open and normally closed alarm contacts (for both major and minor alarms) are provided at the DHU for connection to a customer provided external alarm system. This could be a local system or automatic call-out system.

1.2 Digital Host Unit Description

The DHU, shown in Figure 2, serves as the BTS servicing unit for the Digivance ICS. The DHU provides the following basic functions:

- RF inputs and outputs
- Optical interface to the DRUs or DEUs
- Digitizing of the cellular forward path RF signal

© 2001, ADC Telecommunications, Inc.

- Distribution of the digitized forward path RF signals into six digitized optical signals
- Conversion of up to six reverse path digitized optical signals to six digitized RF signals
- Combining of the six digitized RF signals into a single composite digitized RF signal
- Conversion of the combined digitized RF signal to a composite RF signal
- DC power for powering the DRUs
- Relay contact closures to provide alarm information to an external alarm system

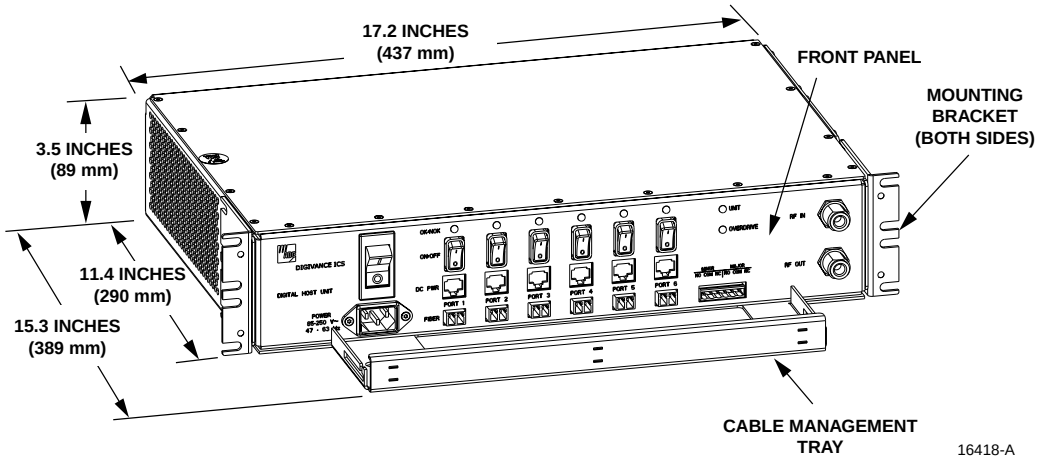

Figure 2. Digital Host Unit

1.2.1 Primary Components

The DHU consists of two electronic circuit board assemblies, a power supply assembly, and a fan assembly that are mounted within a powder-coated sheet metal enclosure. The metal enclosure provides a mounting point for the electronic assemblies, serves as a heat sink, and controls RF emissions. Except for the fan units, the electronic circuit board assemblies are not user replaceable. The DHU is designed for use within a non-condensing indoor environment such as inside a wiring closet or cabinet. All controls, connectors, and indicators are mounted on the DHU front panel for convenient access. Cable management functions for the power and fiber optic cables are provided by a cable management tray that extends outward from the DHU front panel.

1.2.2 Mounting

The DHU may be used in both rack-mount and wall-mount applications. For rack mount applications, a pair of reversible mounting brackets is provided that allow the DHU to be mounted in either a 19-inch or 23-inch EIA or WECO equipment rack. When rack-mounted, the front panel of the DHU is flush with the front of the rack. The cable management tray extends 3.9 inches (99 mm) beyond the front panel. For wall-mount applications, a pair of holes is provided in the cable management tray which allow the DHU to be mounted on any flat vertical surface. The DHU should be oriented with the front panel facing upward when wall-mounted. Fasteners are provided for rack-mount applications.

© 2001, ADC Telecommunications, Inc.

1.2.3 Fault Detection and Alarm Reporting

The DHU is designed to detect internal circuitry faults and optical port faults. Various front panel Light Emitting Diode (LED) indicators turn from green to red or yellow if a fault is detected or an optical input is lost. A set of alarm contacts (normally open and normally closed) are also provided for reporting an alarm to an external alarm system when a fault is detected. Both major alarm (all fault conditions except high temperature) and minor alarm (high temperature fault condition) contacts are provided.

1.2.4 RF Signal Connections

The RF signal connections between the DHU and the BTS are supported through two type N female connectors. One connector is used for coaxial cable connection of the forward path RF signal. The other connector is used for coaxial cable connection of the reverse path RF signal. In most installations, the DHU will not connect directly to the BTS but will be connected to an interface device such as the RIU or the LIU. Additional information concerning the DHU to BTS interface is provided in the Digivance ICS Remote Interface Unit User Manual (ADCP-75-113) and in the Digivance ICS Local Interface Unit User Manual (ADCP-75-114).

The DHU requires a composite forward path RF signal level of –20 dBm or lower. An overdrive limiter protects the system against excessive inputs but does not function during normal operation. The DHU does not have Automatic Gain Control (AGC).

1.2.5 Optical and Electrical Interface Connections

Operation of the DRUs and DEUs is supported by six optical and six electrical ports. Each optical and electrical interface connection includes a status LED, a small form factor LC type optical transceiver, an RJ-45 DC power jack, and a port enable/disable switch. An optical port may be connected to a DRU, a DEU, or not used. An electrical port may be connected to a DRU or not used. Unused ports require no connections at all and are disabled via the corresponding port enable/disable switch. When disabled, the port LED is off, the alarm reporting function is disabled, the laser is off, and the DC power is off. Enabling the enable/disable switch activates all functions.

1.2.6 Powering

The DHU is powered by 120–240 Vac (50–60 Hz) power which is supplied through a standard three-conductor AC power cord. The power cord is provided with the DHU and is 98 inches (2.5 meters) long. A resetable circuit breaker/On-Off switch is provided at the unit front panel. The switch applies power to the DHU internal power supply.

1.2.7 Cooling

Continuous air flow for cooling is provided by dual fans mounted on the right side of the housing. A minimum of 3 inches (76 mm) of clearance space must be provided on both the left and right sides of the DHU for air intake and exhaust. An alarm is provided that indicates if a high temperature condition (>50º C/122º F) occurs. The fans may be field-replaced if either fan fails.

1.2.8 User Interface

The DHU user interface consists of the various connectors, switches, terminals, and LEDs that are provided on the DHU front panel. The DHU user interface points are indicated in Figure 3 and described in Table 1.

© 2001, ADC Telecommunications, Inc.

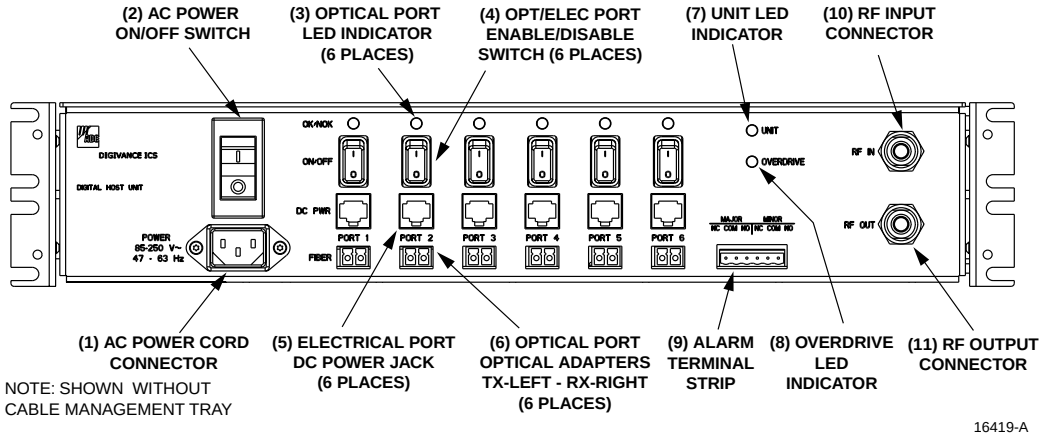

Figure 3. Digital Host Unit User Interface

Table 1. Digital Host Unit User Interface

REF No.	USER INTERFACE DESIGNATION	DEVICE	FUNCTIONAL DESCRIPTION
1	POWER	3-wire AC power cord connector	Used for connecting the AC power cord.
2	I/O	I/O rocker switch/ circuit breaker	Provides AC power On/Off control and AC power over current protection.
3	OK/NOK (Ports 1–6)	Multi-colored LED (Red/Green/Yellow)	Indicates if the DRU or remote DEU connected to the optical port is normal or faulty or if the reverse path optical input from the DRU or remote DEU is normal or lost. (see Note)
4	ON/OFF (Ports 1–6)	I/O rocker switch	Enables or disables corresponding electrical and optical ports.
5	DC PWR (Ports 1–6)	RJ-45 jack (female)	Used for connecting a DRU cat 3 or 5 power cable to the designated DC power jack.
6	FIBER (Ports 1–6)	Small form factor LC-type optical transceiver	Used for connecting each DEU or DRU forward path and reverse path optical link to the designated optical port.
7	UNIT	Multi-colored LED (Red/Green/Yellow)	Indicates if the DHU is normal or faulty. (see Note)
8	OVERDRIVE	Multi-colored LED (Red/Green/Yellow)	Indicates when the forward path RF input power is overdriving the DHU digitizing circuitry. (see Note)
9	MAJOR MINOR	Screw-type terminal connector (14–26 AWG)	Used for connecting an external alarm system to the DHU. Includes normally open (NO), normally closed (NC), and common (COM) wiring connections.
10	RF IN	N-type female RF coaxial connector	Used for connecting the forward path RF coaxial cable to the DHU.
11	RF OUT	N-type female RF coaxial connector	Used for connecting the reverse path RF coaxial cable to the DHU.

Note: A detailed description of LED operation is provided in Section 4.

© 2001, ADC Telecommunications, Inc.

1.3 Digital Remote Unit Description

The DRU, shown in Figure 4, serves as the cellular user servicing unit for the Digivance ICS. The DRU provides the following basic functions:

- RF interface to the cellular users via an external antenna
- Optical interface to the DHU or DEU
- Conversion of the forward path digitized optical signal to a digitized RF signal
- Conversion of the digitized forward path RF signal to the original cellular RF signal
- Digitizing of the cellular reverse path RF signal
- Conversion of the digitized reverse path RF signal to a digital optical signal output
- Transports alarm status via optical link

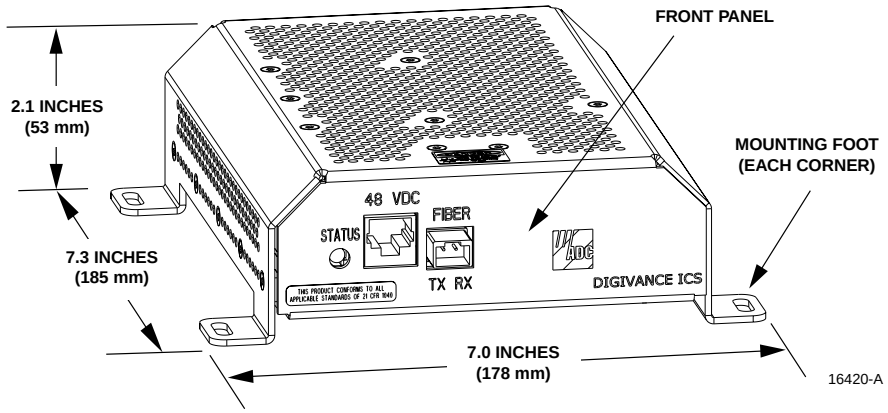

Figure 4. Digital Remote Unit

1.3.1 Primary components

The DRU consists of an electronic circuit board assembly that is mounted within a powder-coated sheet metal enclosure. The metal enclosure provides a mounting point for the electronic assembly, serves as a heat sink, and controls RF emissions. The electronic circuit board assembly is not user replaceable. The DRU is designed for use within a non-condensing indoor environment such as inside a building. All controls, connectors, and indicators (except the SMA antenna connector) are mounted on the DRU front panel for convenient access.

1.3.2 Mounting

The DRU is equipped with four integral mounting feet that allow it to be mounted on any flat horizontal or vertical surface. A typical location for mounting the DRU would be above ceiling tiles where the optical fiber and power cables can be concealed or on a wall. Slots are provided in the mounting feet for securing the DRU to the mounting surface.

© 2001, ADC Telecommunications, Inc.

1.3.3 Fault Detection

The DRU is designed to detect internal circuitry faults or loss of system inputs. A front panel LED indicator turns from green to red when a fault condition is detected or when the optical input is lost. The DRU sends the fault information to the DHU or DEU over the fiber optic link. A corresponding port LED at the DHU or DEU turns from green to red when the DRU reports a fault.

1.3.4 RF Signal Interface

The RF signal interface between the DRU and the cellular users is provided through an external antenna connected to a female SMA connector. The antenna must be ordered separately. Several types of antennas with various RF propagations are available. Non-ADC antennas may also be used with the DRU to meet various application requirements.

1.3.5 Optical Port

The DRU is equipped with a small form factor LC type optical transceiver that provides a point for connecting the optical link cables. Depending on the application requirements, the optical port may be connected to either a DHU or a DEU.

1.3.6 Powering

The DRU is equipped with a female RJ-45 jack that provides a point for connecting a DC power cable. The DRU is powered by 34–48 Vdc power which is supplied through the RJ-45 connector. Power to the DRU may be supplied by the DHU, DEU, or by a 120 Vac to 48 Vdc power converter (available separately as an accessory item) plugged into a properly grounded 120 Vac outlet. The ac/dc converter is a UL Listed stand alone Limited Power Supply (LPS) unit with a rated output of 48 Vdc at 1.2 Amps. When powered by the DHU or DEU, a category 3 or 5 twisted-pair cable terminated with RJ-45 connectors is required.

1.3.7 Cooling

The DRU is cooled by natural convection air flow. The DRU mounting feet are designed to provide clearance under the unit so that air can enter the DRU enclosure from the bottom and exit through the top. A minimum clearance of 3 inches (76 mm) must be provided on all sides of the DRU (except the bottom) to ensure there is adequate air circulation for cooling. In addition, at least one surface of the DRU installation area must be open to the interior of the building.

1.3.8 User Interface

The DRU user interface consists of the connectors and the LED that are provided on the DRU front and rear panels. The DRU user interface points are indicated in Figure 5 and described in Table 2.

© 2001, ADC Telecommunications, Inc.

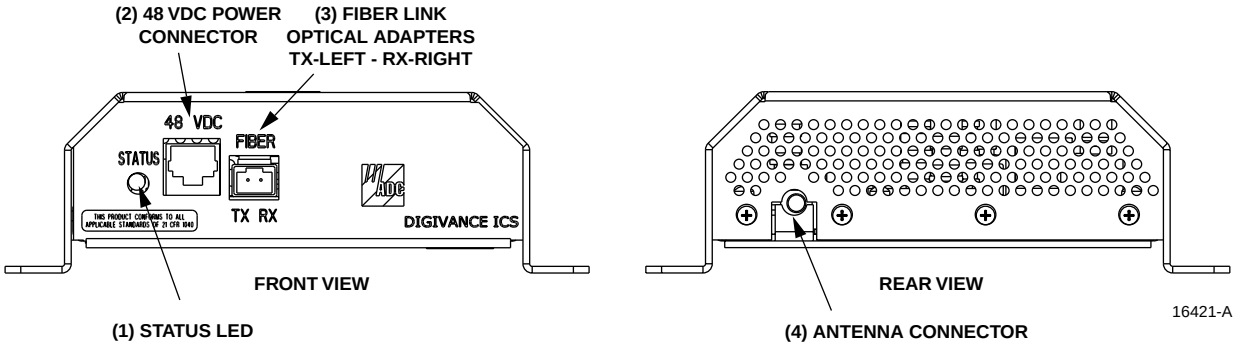

Figure 5. Digital Remote Unit User Interface

Table 2. Digital Remote Unit User Interface

REF No.	USER INTERFACE DESIGNATION	DEVICE	FUNCTIONAL DESCRIPTION
1	STATUS	Multi-colored LED (Red/Green/Yellow)	Indicates if the status of the DRU is normal or faulty or if the forward path optical input is normal or lost. (see Note)
2	48 VDC	RJ-45 jack (female)	Used for connecting a DC power cable.
3	FIBER TX RX	Small form factor LC-type optical transceiver	Used for connecting the forward path and reverse path optical links.
4	–	SMA-type coaxial connector (female)	Used for connecting the antenna coaxial cable lead.

Note: A detailed description of LED operation is provided in Section 4.

1.4 Digital Expansion Unit Description

The DEU, shown in Figure 6, serves as a service expansion unit and line extender for the Digivance ICS. The DEU provides the following basic functions:

- Optical interface to the DHU and up to six DRUs or DEUs
- Conversion of the forward path digitized optical signal to an electrical bit stream
- Splitting of the electrical bit stream into six separate bit streams
- Conversion of the six forward path electrical bit streams into six digital optical signals
- Conversion of up to six reverse path digital optical signals into six serial bit streams
- Combining of the six reverse path serial bit streams into a single digital composite signal
- Conversion of the single digital composite signal to a digital optical signal
- DC power for powering the DRUs
- Alarm transport via the optical links

© 2001, ADC Telecommunications, Inc.

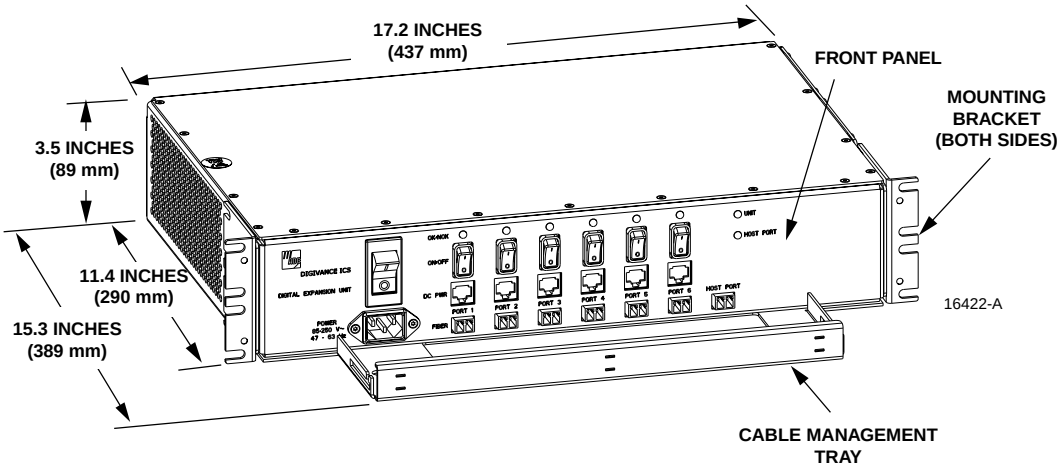

Figure 6. Digital Expansion Unit

1.4.1 Primary Components

The DEU consists of two electronic circuit board assemblies and a power supply that are mounted within a powder-coated sheet metal enclosure. The metal enclosure provides a mounting point for the electronic assemblies and serves as a heat sink. Except for the fan units, the electronic circuit board assemblies are not user replaceable. The DEU is designed for use within a non-condensing indoor environment such as inside a wiring closet or cabinet. All controls, connectors, and indicators are mounted on the DEU front panel for convenient access. Cable management functions for the power and fiber optic cables are provided by a cable management tray that extends outward from the DEU front panel.

1.4.2 Mounting

The DEU may be used in both rack-mount and wall-mount applications. For rack mount applications, a pair of reversible mounting brackets is provided that allow the DEU to be mounted in either a 19-inch or 23-inch EIA or WECO equipment rack. When rack-mounted, the front panel of the DEU is flush with the front of the rack. The cable management tray extends 3.9 inches (99 mm) beyond the front panel. For wall-mount applications, a pair of holes is provided in the cable management tray which allow the DEU to be mounted on any flat vertical surface. The DEU should be oriented with the front panel facing upward when wall-mounted. Fasteners are provided for rack-mount applications.

1.4.3 Fault Detection

The DEU is designed to detect internal circuitry faults or loss of system inputs. Various front panel Light Emitting Diode (LED) indicators turn from green to red or yellow when a fault is detected or when an optical input is lost. The DEU transports the fault information to the DHU or supporting DEU over the fiber optic link. A corresponding port LED at the DHU or DEU turns from green to red when the DEU reports a fault.

© 2001, ADC Telecommunications, Inc.

1.4.4 Optical and Electrical Interface Connections

Operation of the DRUs and DEUs is supported by six optical and six electrical ports. Each optical and electrical interface connection includes a status LED, a small form factor LC type optical transceiver, an RJ-45 DC power jack, and a port enable/disable switch. An optical port may be connected to a DRU, a DEU, or not used. An electrical port may be connected to a DRU or not used. Unused ports require no connections at all and are disabled via the corresponding port enable/disable switch. When disabled, the port LED is off, the alarm reporting function is disabled, the laser is off, and the DC power is off. Enabling the enable/disable switch activates all functions. The DEU also provides one optical port designated the host port for the optical interface with the DHU or a supporting DEU.

1.4.5 Powering

The DEU is powered by 120–240 Vac (50–60 Hz) power which is supplied though a standard three-conductor AC power cord. The power cord is provided with the DEU and is 98 inches (2.5 meters) long. A reset able circuit breaker/On-Off switch is provided at the unit front panel. The switch applies power to the DEU internal power supply.

1.4.6 Cooling

Continuous air flow for cooling is provided by dual fans mounted on the right side of the sheet metal housing. A minimum of 3 inches (76 mm) of clearance space must be provided on both the left and right sides of the DEU for air intake and exhaust. An alarm is provided that indicates if a high temperature condition (>50º C/122º F) occurs. The fans may be field-replaced if either unit fails.

1.4.7 User Interface

The DEU user interface consists of the various connectors, switches, and LEDs that are provided on the DEU front panel. The DEU user interface points are indicated in Figure 7 and described in Table 3.

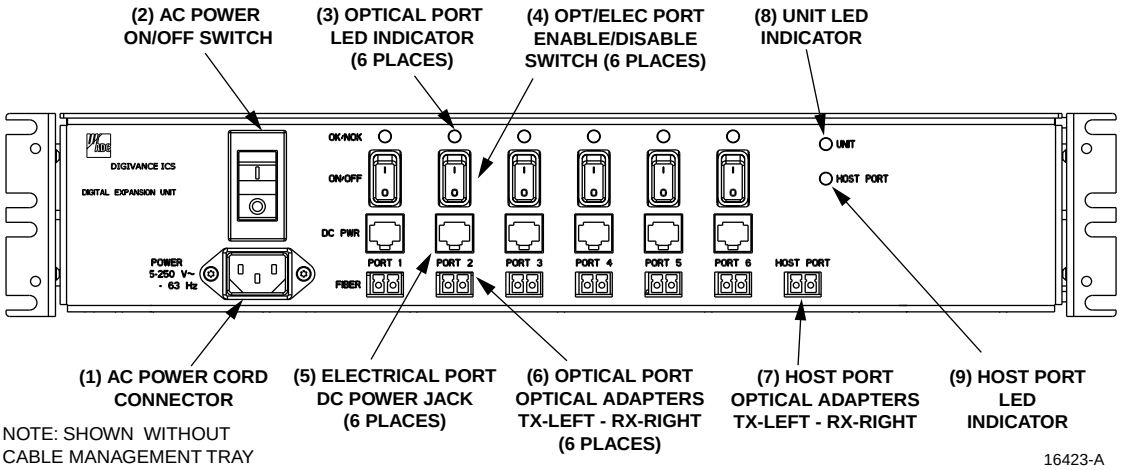

Figure 7. Digital Expansion Unit User Interface

© 2001, ADC Telecommunications, Inc.

Table 3. Digital Expansion Unit User Interface

REF No.	USER INTERFACE DESIGNATION	DEVICE	FUNCTIONAL DESCRIPTION
1	POWER	3-wire AC power cord connector	Used for connecting the AC power cord.
2	I/O	I/O rocker switch/ circuit breaker	Provides AC power On/Off control and AC power over current protection.
3	OK/NOK (Ports 1–6)	Multi-colored LED (Red/Green/Yellow)	Indicates if the DRU or remote DEU connected to the optical port is normal or faulty or if the reverse path optical input from the DRU or remote DEU is normal or lost. (see Note)
4	ON/OFF (Ports 1–6)	I/O rocker switch	Enables or disables corresponding electrical and optical ports.
5	DC PWR (Ports 1–6)	RJ-45 jack (female)	Used for connecting a DRU cat 3 or 5 power cable to the designated DC power jack.
6	FIBER (Ports 1–6)	Small form factor LC-type optical transceiver	Used for connecting each DRU or remote DEU forward path and reverse path optical link to the designated optical port.
7	HOST PORT	Small form factor LC-type optical transceiver	Used for connecting the DHU or supporting DEU forward path and reverse path optical link.
8	UNIT	Multi-colored LED (Red/Green/Yellow)	Indicates if the DEU is normal or faulty. (see Note)
9	HOST PORT	Multi-colored LED (Red/Green/Yellow)	Indicates if the forward path optical input from the DHU or supporting DEU is normal or lost. (see Note)

Note: A detailed description of LED operation is provided in Section 4.

1.5 Terms and Definitions

Refer to Table 4 for a listing of the terms used in this manual and their definition.

Table 4. Terms and Definitions

TERM	DEFINITION
Alarm Response	The response to an alarm input.
Base Transceiver Station	The radio equipment that transmits and receives the voice and control channels to and from the cellular handsets.
Composite Signal	The sum of several combined signals.
Digital Expansion Unit	The unit that extends a single optical interface to multiple optical interfaces or that extends an optical run.
Digital Host Unit	The unit that converts and provides the digital source signal to all DEUs and DRUs and converts summed inputs from DEUs and DRUs.

(continued)

© 2001, ADC Telecommunications, Inc.

Table 4. Terms and Definitions, continued

TERM	DEFINITION
Digital Remote Unit	The unit that interfaces the in-building user to the Digivance optical transport.
Digitized RF Signal	The RF signal in a digitized form.
Forward Path Signal	A signal that travels from the base station to the cell phone.
Major Alarm	An alarm condition that applies when any fault (except high temperature) occurs.
Minor Alarm	The alarm condition that applies when a high temperature condition occurs. (> 50º C/122º F)
Mute	To force a forward path RF signal to a “no signal” state.
Normal State	The operating state after power-up is completed and no faults are detected.
Port	An RF, optical, or electrical interface point.
Port Alarm	A fault that affects only the unit or units connected to that port. Indicates no optical input to port.
Power-Up State	The period between the application of power to a unit and the normal state. This period includes time for circuit stabilization and initialization operations.
Reverse Path Signal	A signal that travels from one or more cell phones to the base station.
Transport Alarm Signal	An alarm signal transported over the fiber optic link.
Unit Alarm	A fault within a unit that usually affects all connected ports.

1.6 Specifications

Refer to Table 5 for the Digivance ICS system specifications. All specifications apply after five minute warm-up period.

Table 5. System Specifications

PARAMETER	SPECIFICATION	REMARKS
Optical – All Units		
Fiber type	Multimode 50 or 62.5 micron core	Two fibers per link
Maximum Fiber Length	500 m (1,641 ft) 750 m (2461 ft)	With 62.5 micron core With 50 micron core
Optical Output Power	–10 to +4 dBm	
Optical Wavelength	850 nm	
Environmental		
Operating Temperature	0º to 50º C (32º to 122º F)	
Storage Temperature	–30º to +70º C (–22 to 158º F)	
Humidity	No condensation	
Weather resistance	Indoor installation only	

(continued)

© 2001, ADC Telecommunications, Inc.

Table 5. System Specifications, continued

PARAMETER	SPECIFICATION	REMARKS
RF Forward Path System Bandwidth	 25 MHz	
800 MHz frequency range (A and B band)	US Cellular 869 to 894 MHz	
1900 MHz freq. ranges AD band DBE band BEF band EFC band	US PCS 1925 to 1950 MHz 1945 to 1970 MHz 1950 to 1975 MHz 1965 to 1990 MHz	
Output power	+13 dBm ± 1 dB at midpoint of passband	Maximum composite power
Gain	+33 ± 1.5 dB at band center	At room temperature
Gain variation	≤ 6 dB < 1.5 dB variation	Over frequency, temperature, and unit to unit. Per 1.25 MHz CDMA channel
OIP3	≥ +35 dBm	At +13 dBm composite output
CDMA ACPR1	≤ –45 dBc	
Spurious Output	≤ –35 dBm	
DHU RF input signal level	–20 dBm maximum composite	Provides a nominal +13 dBm RF output signal at the DRU
RF Reverse Path System bandwidth	 25 MHz	
800 MHz frequency range (A and B band)	US Cellular 824 to 849 MHz	
1900 MHz freq. ranges AD band DBE band BEF band EFC band	US PCS 1845 to 1870 MHz 1865 to 1890 MHz 1870 to 1895 MHz 1885 to 1910 MHz	
Gain	+10 dB ± 1 dB at midpoint of passband	
Gain Variation	≤ 6 dB < 1.5 dB variation	Over frequency, temperature, and unit to unit. Per 1.25 MHz CDMA channel
Automatic Gain Limiting	Prevents A/D saturation with large inputs. Disabled for composite RF input ≤ –40 dBm	
Noise Figure	≤ 8 dB typical midband	8 + 10 log N (N = # of remotes) See Note at end of table
DHU RF output signal level	–30 dBm typical	With a –40 dBm composite maximum input signal at the DRU

(continued)

© 2001, ADC Telecommunications, Inc.

Table 5. System Specifications, continued

PARAMETER	SPECIFICATION	REMARKS
Physical/Electrical – DHU		
Weight	18.5 lbs (8.4 kg)	
RF connection	Type N	Female
Alarm connection	Screw terminals (14–26 AWG)	NO, NC, and COM
Optical connection	Duplex LC transceiver	
DC pwr output connection	RJ-45	Female
Power input	120/240 Vac, 50–60 Hz	
AC power connection	IEC 320	Male
Power consumption	250 W	Maximum
Current rating	85–250 Vac, 2 Amp input	
Physical/Electrical – DEU		
Weight	18.5 lbs (8.4 kg)	
Optical connection	Duplex LC transceiver	
DC pwr output connection	RJ-45	Female
Power input	120/240 Vac, 50–60 Hz	
AC power connection	IEC 320	Male
Power consumption	250 W	Maximum
Current rating	85–250 Vac, 2 Amp input	
Physical/Electrical – DRU		
Weight	1.5 lbs (708 g)	
RF connection	SMA	Female
800 MHz antenna types	Ceiling mount omni directional 70º directional panel 90º directional panel Ceiling mount hallway	2.5 dBi gain 8 dBi gain 7.5 dBi gain 4 dBi gain
1900 MHz antenna types	Ceiling mount omni directional 90º directional panel Ceiling mount hallway	2.5 dBi gain 7.5 dBi gain 4 dBi gain
Optical connection	Duplex LC transceiver	
DC pwr input connection	RJ-45	Female
Power input	34 to 48 Vdc	
DC power cable maximum length (Cat-3 or -5 cable)	500 meters (1,641 ft)	Any distance beyond 500 meters requires alternate power sourcing
Power consumption	17 W	Typical
Current rating	48 Vdc, 350 mA input	

Note: The noise from all remotes is added at the host. Given N units with identical gain and noise, the formula applies exactly. Slight unit to unit noise figure and gain variations make this a very useful approximation.

© 2001, ADC Telecommunications, Inc.

2 INSTALLATION PLANNING AND SYSTEM DESIGN

This section provides installation planning information and basic system design recommendations for RF engineers that will be designing and installing an in-building coverage solution using the Digivance ICS. System design and planning services are available from ADC if required. Refer to Section 6 of this manual for additional information.

2.1 Base Station Interface Requirements

The DHU may be interfaced either locally or remotely with the BTS. As referenced in this publication, the BTS could be either a microcell or a cell site base station. With a local interface, a hard-wire connection is provided between the DHU and the BTS (microcell) using coaxial cables. With a remote interface, an over-the-air connection is provided between the DHU and the BTS (cell site base station) using a donor antenna.

2.1.1 Local BTS (Microcell) Interface

A local interface between the DHU and the BTS (microcell) over coax requires specific RF input and output signal levels at the DHU and BTS. The correct levels can be provided at the BTS and DHU using the Local Interface Unit (LIU). The LIU is an accessory item that provides adjustable gain or attenuation in both the RF forward and reverse path. The level of the RF output signal from the BTS will vary depending on the type of BTS. Therefore, it will generally be necessary to add some gain or some attenuation to the forward path (downlink) signal to provide the recommended composite maximum RF input signal level at the DHU which is**–20 dBm**. When the level of the RF input signal at the DHU is –20 dBm, the level of the RF output signal at the DRU will be **+13 dBm** which is the maximum allowed.

In the reverse path, the input signal level required at the BTS will also vary depending on the type of BTS. When the level of the reverse path (uplink) signal at the DRU is at the recommended composite maximum of **–40 dBm**, the level of the RF output signal from the DHU is **–30 dBm**. Therefore, it may be necessary to add some gain or attenuation to the reverse path signal in order to achieve the required RF input signal level at the BTS. A block diagram showing a typical **local** DHU to BTS interface is provided in Figure 8.

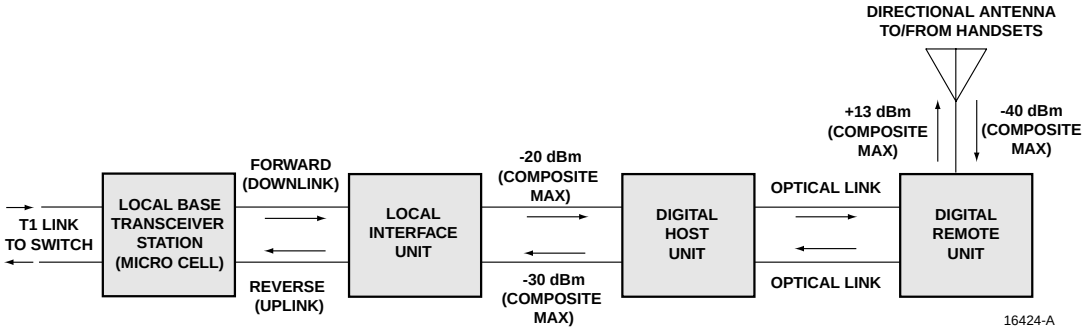

Figure 8. Local BTS Interface Block Diagram

© 2001, ADC Telecommunications, Inc.

The LIU is rack or wall mountable and is powered by 120–240 Vac (50–60 Hz) power. Refer to the Digivance Local Interface Unit User Manual (ADCP-75-113) for a complete description of the LIU.

2.1.2 Remote BTS (Cell Site Base Station) Interface

A remote interface between the DHU and the BTS (cell site base station) via a donor antenna requires specific RF input and output signal levels at the DHU and antenna. The correct levels at the DHU and antenna can be provided using the Remote Interface Unit (RIU). The RIU is an accessory item that provides adjustable gain or attenuation in both the RF forward and reverse paths. The RIU connects to a directional antenna through a duplexer which provides separate forward and reverse path connections for the DHU. In the forward path (downlink), the RIU provides the DHU with the recommended composite maximum RF input signal level of **–20 dBm**. When the level of the RF input signal at the DHU is –20 dBm, the level of the RF output signal at the DRU is **+13 dBm** which is the maximum allowed.

In the reverse path, the required RF output signal level to the donor antenna will vary depending on the distance from the BTS. When the level of the reverse path (uplink) signal at the DRU is at the recommended composite maximum level of **–40 dBm**, the level of the RF output signal from the DHU is **–30 dBm**. Therefore, it may be necessary to add gain or attenuation to the reverse path signal in order to achieve the required output signal level at the RIU antenna port. A block diagram showing a typical **remote** DHU to BTS interface is provided in Figure 9.

The RIU is rack or wall mountable and is powered by 120–240 Vac (50–60 Hz) power. Refer to the Digivance Remote Interface Unit User Manual (ADCP-75-114) for a complete description of the RIU.

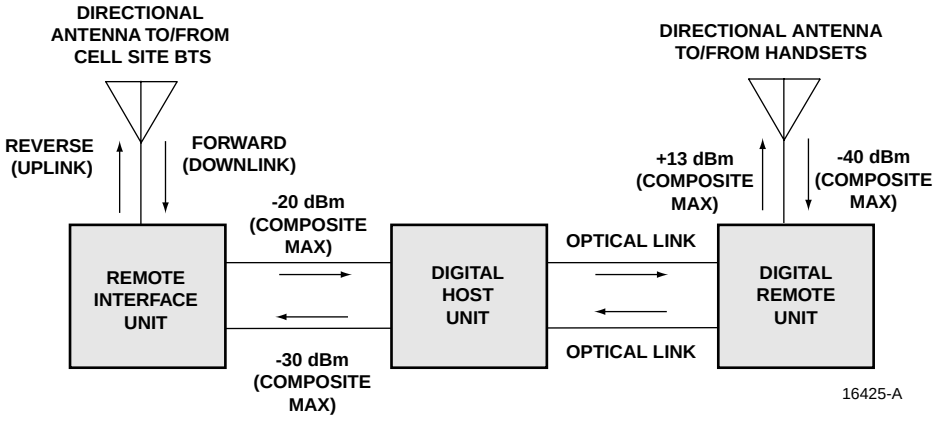

Figure 9. Remote BTS Interface Block Diagram

© 2001, ADC Telecommunications, Inc.

2.2 Location and Mounting Requirements

2.2.1 DHU and DEU Location and Mounting Requirements

The DHU and the DEU may be either rack mounted or wall mounted. Fasteners (both metric and US standard) are included with each unit for rack mount applications. A pair of reversible mounting brackets is provided that allows the unit to be mounted in either a 19-inch or 23-inch EIA or WECO equipment rack. When rack-mounted, the front panel of the unit is flush with the front of the rack. The cable management tray extends 3.9 inches (99 mm) beyond the front panel. Both the DHU and DEU occupy 3.5 inches (89 mm) of rack space. Make sure the mechanical loading of the rack will be even to avoid a hazardous condition such as a severely unbalanced rack. The rack should safely support the combined weight of all the equipment it holds.

For wall-mount applications of the DHU or DEU, a pair of holes is provided in the cable management tray that allows the unit to be mounted on any flat vertical surface. The mounting holes are spaced 11-21/32 inches (296 mm) apart. Orient the DHU/DEU so the front panel faces up when mounted. Appropriate fasteners for wall mounting must be provided by the installer. It is recommended that a backer board such as 3/4-inch plywood be installed over the mounting surface to provide a secure base for attaching the DHU or DEU.

Mount the DHU and DEU in a non-condensing indoor environment such as inside a wiring closet or within an environmentally controlled cabinet. All controls, connectors, and indicators are mounted on the front panel. Route all cables to the front panel for connection. Use the cable retainers provided on the cable management tray to secure the fiber optic, DC power, and external alarm system cables.

The maximum recommended ambient temperature for the DHU and DEU is 50º C (122º F). Allow sufficient air circulation or space between each unit when installed in a multi-unit rack assembly because the operating ambient temperature of the rack environment might be greater than room ambient. Provide a minimum clearance of 3 inches (76 mm) on both the left and right sides of the unit for air intake and exhaust. Refer to Figure 2 for the DHU dimensions and Figure 6 for the DEU dimensions.

2.2.2 DRU Location and Mounting Requirements

The DRU may be wall-mounted or ceiling-mounted. The DRU is equipped with four integral mounting feet that allow it to be fastened to any flat vertical or horizontal surface. Holes are provided in the mounting feet for inserting fasteners. Appropriate fasteners for securing the DRU to the selected mounting surface must be provided by the installer.

Mount the DRU in a non-condensing indoor environment. Route the DC power cable and fiber optic links to the DRU front panel for connection. Route the antenna coaxial cable to the DRU rear panel for connection. Provide a minimum of 3 inches (76 mm) of clearance space on all sides of the DRU (except the bottom) to ensure there is adequate air circulation for cooling. In addition, at least one surface of the DRU installation area must be open to the interior of the building. If a portable/flexible antenna will be installed, allow a minimum of 9 inches (229 mm) clearance along the surface with the antenna. Refer to Figure 4 for the DRU dimensions.

© 2001, ADC Telecommunications, Inc.

2.3 Powering Requirements

2.3.1 DHU and DEU Powering

The DHU and DEU are powered by 120–240 Vac (50–60 Hz) which is supplied through a standard three-conductor AC power cord. The 120 Vac power cord is provided with the unit and is 98 inches (2.5 m) long. Both the DHU and the DEU have a current rating of **2.0 Amps at 120 Vac** input. Locate each unit so that an AC outlet is within the reach of the power cord.

If back-up powering is required, it is recommended that the building Uninterruptible Power Supply (UPS) system be used to provide back-up power to the DHU and DEU in the event of an AC power outage.

2.3.2 DRU Powering

The DRU is powered by 48 Vdc power which is supplied to the DRU through the front panel RJ-45 connector. Power to the DRU may be provided by the DHU, DEU, or by a 120 Vac to 48 Vdc power converter (available separately as an accessory item) plugged into a properly grounded 120 Vac outlet. The DRU has a current rating of **350 mA at 48 Vdc** input.

If the DRU will be powered by the DHU or DEU, the power cable must be fabricated on-site by the installer. Use category 3 or 5 twisted pair cable as the power supply cable when the DRU is powered by the DHU or DEU. The maximum recommended length of the power cable is **500 meters**. If the DRU will be located more than 500 meters from the DHU or DRU, the DRU must be locally powered by a 48 Vdc power converter. Route the power cable between the power source and the DRU. Terminate both ends of the power cable with a **male** RJ-45 connector.

The DRU may be powered locally by the ac/dc converter, shown in Figure 10, which is available as an accessory item. The converter is a UL Listed stand alone Limited Power Supply (LPS) unit with a rated output of **48 Vdc at 1.2 Amps**. The converter is equipped with a 6-foot (1.8 m) DC power cable which is terminated with an RJ-45 male connector. The converter is powered by 120–240 Vac (50–60 Hz) power which is supplied though a standard three-conductor AC power cord. The 120 Vac power cord is 6 feet (1.8 m) long and is provided with the converter.

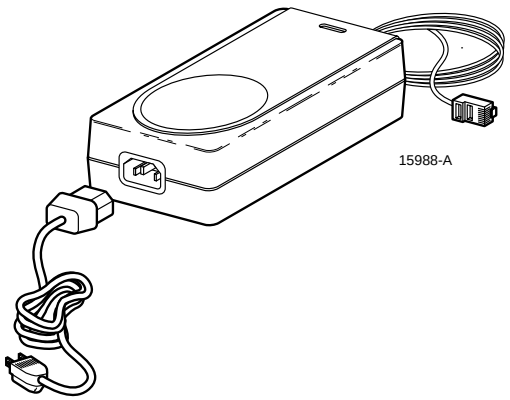

Figure 10. AC/DC Power Converter

© 2001, ADC Telecommunications, Inc.

2.4 Optical Options and Requirements

Each DHU and its associated DEUs and DRUs are connected over a pair of fiber optic links. One link transports the forward path optical signal and the other link transports the reverse path optical signal. Either 50 or 62.5 micron core multi-mode fiber optic cable may be used for the optical link. If 50 micron cable is used, the optical link may be up to 750 meters (2461 ft) in length. If 62.5 micron cable is used, the optical link may be up to 500 meters (1,641 ft) in length. A diagram of the optical connections is shown in Figure 11.

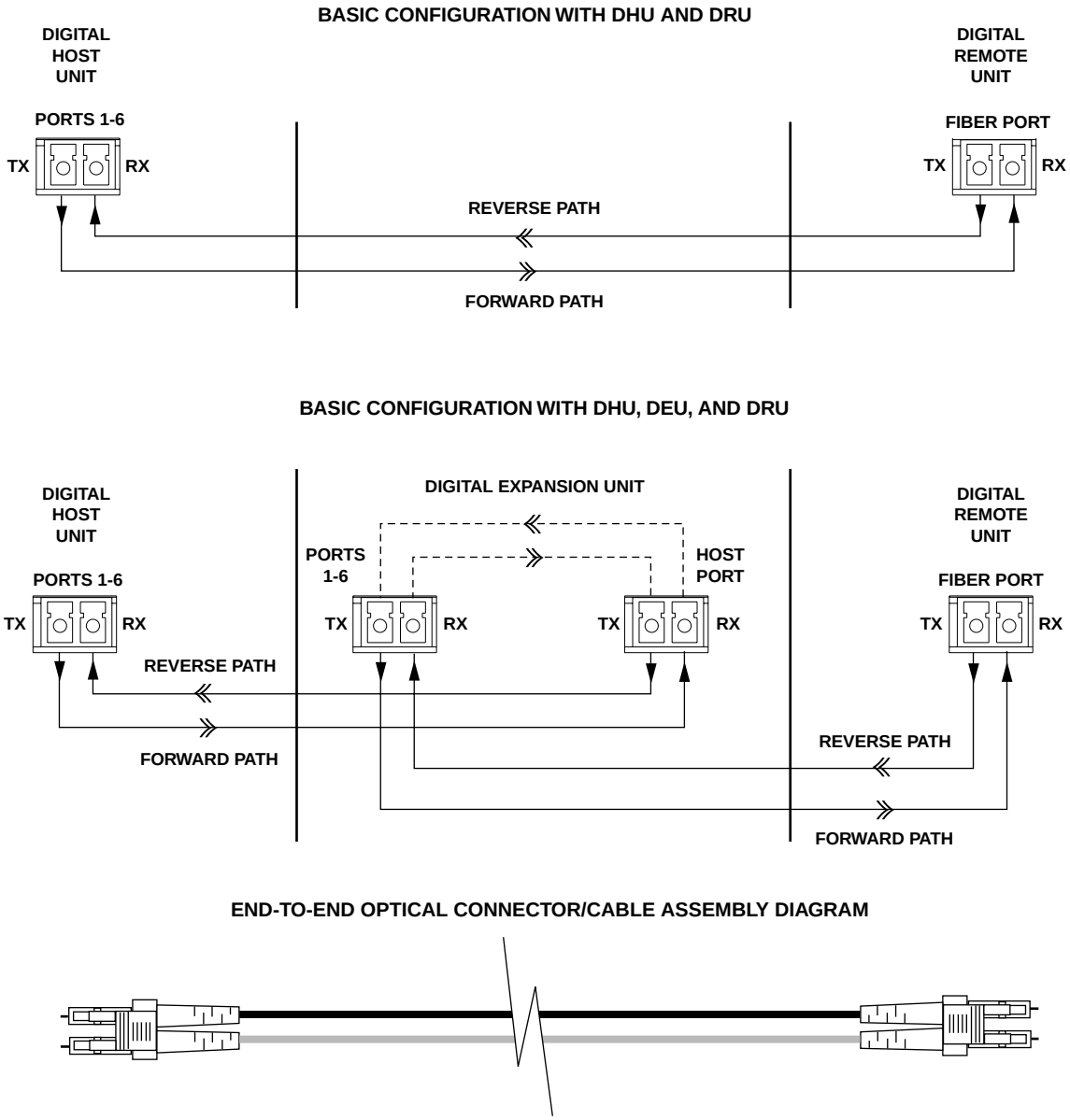

Figure 11. Digivance ICS Optical Connections

© 2001, ADC Telecommunications, Inc.

Whenever possible, use conduit or a guideway such as the FiberGuide system to route the optical links between the DHU, the DEUs, and the DRUs. Avoid routing optical fibers through ladder type cable racks or troughs that do not provide sufficient support to limit bending or prevent accidental damage. Tie-wrapping is not recommended as a means of securing fiber optic cables. Provide sufficient slack at each unit for connecting each fiber to the required port. Fibers may be pre-terminated or terminated on-site using field-installable LC type connectors.

2.5 Coaxial Cable Requirements

The DHU interfaces either locally (see Figure 8) or remotely (see Figure 9) with the BTS through coaxial cable connections. In a local interface with the BTS, coaxial cables are required to link the DHU with the LIU and the LIU with the BTS. In a remote interface, coaxial cables are required to link the DHU with the RIU and the RIU with the donor antenna. The DHU, LIU, and RIU are equipped with N-type female connectors for connecting the forward and reverse path coaxial cables. Use high performance, flexible, low loss 50-ohm coaxial communications cable (RG 400 or equivalent) for all coaxial connections.

2.6 System Expansion Planning

The DEU enables 6-way expansion of any optical port. This makes it possible to add more DRUs without having to install additional DHUs. Each DHU is equipped with six optical ports. If more than six DRUs are required by the application, a DEU may be connected to one of the optical ports at the DHU which expands that port to six ports. If still more optical ports are required, then a second DEU may be connected to the DHU or a second DEU may be connected to the first DEU. The ability to cascade DEU's in parallel or in series provides unlimited flexibility. It is physically possible to connect an unlimited number DRUs to the DHU through the installation of DEUs.

The total number of DRU's that can be served is limited by the cumulative noise effect caused by antenna combining. This number cannot be determined until the radius distance of coverage required at the DRU antenna is determined and the path loss attributed to the structure are known. The system design requires that the carrier to noise differential be greater than the customer's desired signal to noise ratio.

If it is likely that the system will be expanded in the future, locate the DHU in such a way that it can either be used as a hub for an expanded system or replaced with a DEU which is then connected to a relocated DHU. It should also be noted that a DEU can be used as an optical regenerator. A DRU may sometimes need to be located at a point that is beyond the 500 or 750 meter limit (depending on fiber type) imposed by the optical link. The solution is to install a DEU at the maximum optical link limit (500 or 750 meters) from the DHU. This provides an additional 500 or 750 meters of optical link beyond the DEU for connecting the DRU.

2.7 DRU Antenna Options

Various antennas, shown in Figures 12 and 13, are available from ADC for use with the DRU. All antennas include a 6 foot (1.8 m) long 50-ohm coaxial cable (equipped with SMA male connector) for connection to the DRU. The DRU is equipped with an SMA female connector for connecting the antenna cable.

© 2001, ADC Telecommunications, Inc.

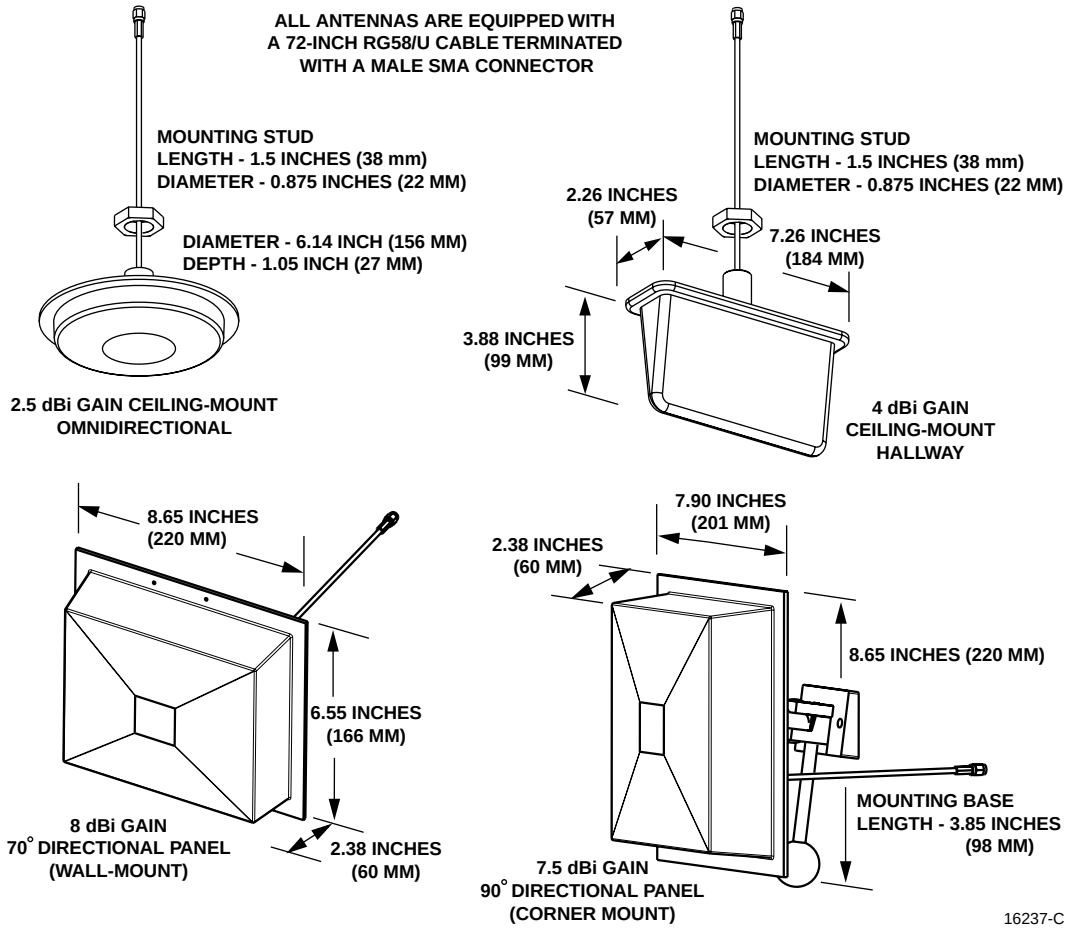

Figure 12. 800 MHz DRU Antenna Options

The DRU antennas are designed for unobtrusive mounting within an office environment. Each type of antenna provides a specific coverage pattern in order to accommodate the shape of the area where coverage is required. The ceiling-mount omni directional antenna is designed to mount in the center of the coverage area. The directional panel antenna is designed to mount vertically on one side of the coverage area. The panel antenna (800 MHz only) provides is designed to mount vertically in the corner of the coverage area. The ceiling mount hallway antenna is designed to mount in the center of long corridors. Antennas other than those offered by ADC may also be used if required.

Note: To comply with Maximum Permissible Exposure (MPE) requirements, antennas must be installed to provide at least **20 centimeters** (8 inches) of separation from all persons per FCC 47 CFR part 2.1091.

© 2001, ADC Telecommunications, Inc.

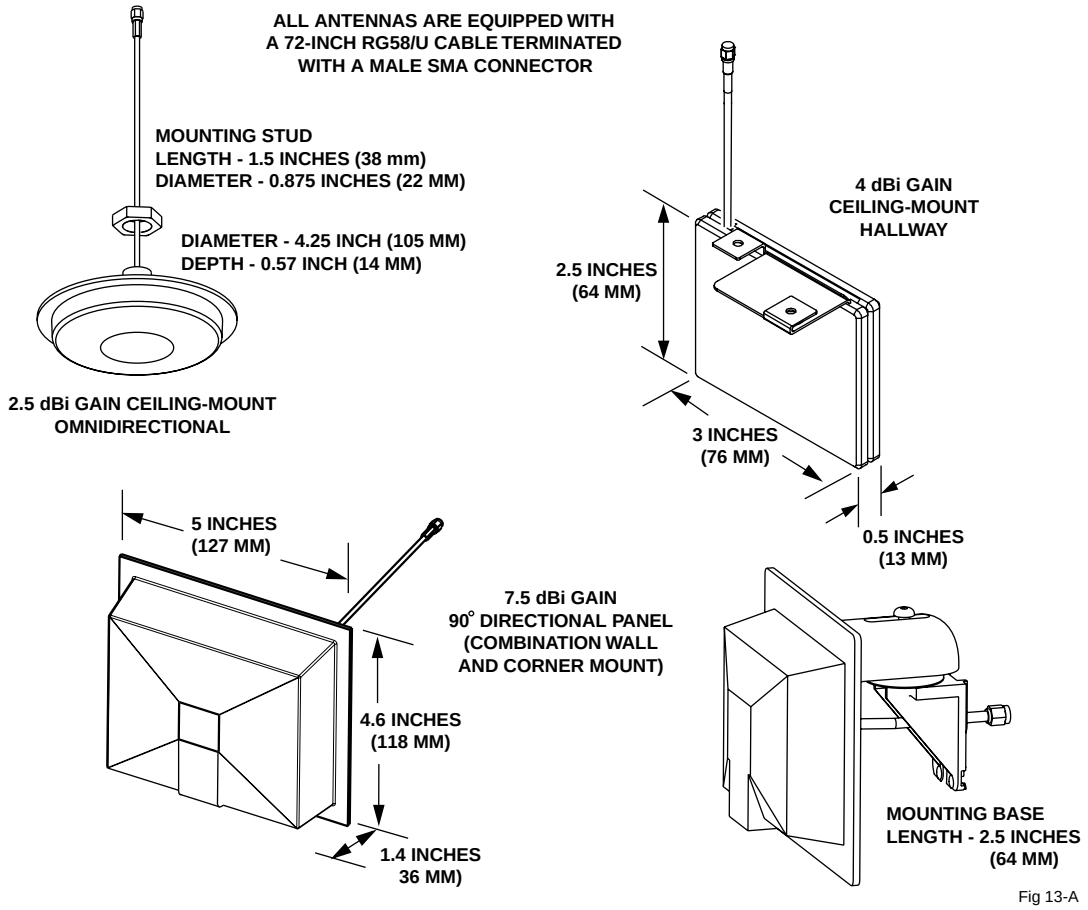

Figure 13. 1900 MHz DRU Antenna Options

2.8 External Alarm System Reporting Requirements

The DHU provides normally open (NO) and normally closed (NC) dry alarm contacts for reporting **minor** and **major** alarms to an external alarm system. A minor alarm is defined as a high temperature condition. A major alarm is defined as any fault condition except high temperature. Connections to the alarm contacts are provided through a screw-type terminal strip. Use category 3 or 5 cable for the alarm wires. If an external alarm system is not in use, no alarm connections are required.

2.9 Frequency Band Selection Requirements (1900 MHz)

The 1900 MHz version of the DHU and DRU must be configured by the installer to operate in the appropriate forward and reverse path frequency band. Four band selections (AD, DBE, BEF, and EFC) are possible. A DIP switch on the underside of each unit is provided for selecting the required frequency band. The band selection must be done prior to installation since the DIP switch is usually not accessible after the unit is mounted. Once the required selection has been made, no further band adjustments are required.

© 2001, ADC Telecommunications, Inc.

2.10 Maintenance Requirements

The Digivance ICS requires no regular maintenance to insure continuous and satisfactory operation. Maintenance, as it applies to the Digivance ICS, primarily involves diagnosing and correcting service problems as they occur. Faults and failures arising from within the Digivannce ICS will generate an external alarm response which includes lighting an LED indicator(s) and closing or opening a set of alarm contacts. When an alarm is reported, it will be necessary to isolate the source of the problem by observing the LED indicators on each unit and then performing specified tests to isolate the problem. Once the source of the fault is isolated, the appropriate action can be taken to correct the problem. The only unit components that can be replaced are the cooling fans which mount in the DHU and the DEU. The failure of any other component within a unit will require replacement of the unit. Basic trouble-shooting procedures are provided in Section 5 of this manual.

2.11 System Design Recommendations

Follow a systematic process when designing an in-building coverage solution. The following sub sections outline the four phases of the in-building coverage solution design process. System design and planning services are available from ADC if required. Refer to Section 6 of this manual for additional information.

2.11.1 Phase One – Initial Evaluation

Qualify the Installation: Confirm that there are no extenuating circumstances that would prevent a successful installation such as: extreme cellular system issues (blocking, severe interference, site problems, etc.), building issues, power issues, or safety issues (site should not present any hazards or conditions that would make operation of the equipment unsafe).

Analyze the RF Situation: Determine how the system RF link to the outside world will be provided. Will it be a direct feed from a BTS (microcell) or an over-the-air connection via a donor antenna? If it is a donor antenna, is the customer within the coverage footprint of a serving cell or better? The coverage can be determined during the preliminary walkthrough by checking the downlink Received Signal Strength Indication (RSSI) outside the building with a unity gain sampling antenna. Sometimes a rooftop reading is needed to obtain a sufficient signal level. Note that it is an **FCC violation** to expand the normal coverage footprint of a cellular site with an in-building product. In addition, consider the impact the system will have on traffic, especially the busy hour. Confirm with the service provider that the expected increase in the volume of calls will be addressed (if needed), possibly with additional equipment such as additional channels or a microcell.

Determine the Amount of Building Attenuation: If a donor antenna will provide the RF link to the BTS, determine if there is enough signal isolation between the donor antenna and the in-building system to avoid a feedback loop and signal degradation. This step can often be accomplished during the preliminary walkthrough.

Discuss Installation with Building Management and Engineering: Discuss all *initially anticipated* Digivance ICS coverage areas (including any obviously desirable cable routings, equipment installations, power and mechanical requirements) with the authorized client and

© 2001, ADC Telecommunications, Inc.

building personnel for an initial approval/confirmation. This gives a good estimate of the extent of the system work needed. Occasionally, some of the system design work can be accomplished at this point.

2.11.2 Phase Two – System Design

Determine forward and reverse path loss and then design for unity gain on the uplink and maximum power out of the DRU on the downlink: The overall purpose of the Digivance ICS is to transparently overcome attenuation losses, not to provide additional gain beyond what is required to bring the signal to unity gain. Complete the following steps to make this determination:

1. Determine the in-building reverse path (uplink) losses at typical operating frequencies and distances from the subscriber handset (terminal) to the DRU. This information will be used to determine the optimal uplink signal level to the outside world.

2. Determine the typical composite cell site Effective Radiated Power (ERP) into the system. Calculate the interface adjustment required to feed the required downlink signal level to the DHU in order to drive the DRU output signal at the desired level.

Determine the location of the DHU and its RF and AC power sources: Complete the following steps to make this determination:

1. Determine where and how the DHU will be mounted.

2. Determine the location of the DHU AC power source.

3. Determine the RF source (LIU with BTS or RIU with BTS through donor antenna) for the DHU.

4. If an LIU connection with the BTS is required, determine the distance to the DHU.

5. If a RIU connection with the BTS is required, determine what type of antenna is needed and where it can be mounted.

6. Determine the attenuation or amplification requirements for the DHU to BTS interface.

Discuss the design of the Digivance ICS installation with building management and engineering: Explain the proposed system design with building management and engineering personnel and obtain final design approval prior to installation.

2.11.3 Phase Three – Installation

Use industry standard practices for cabling, installation, and powering to complete the following:

1. Install the DHU as described in Section 3 of this manual and adjust the RF interface levels based on the system design specifications. Additional information concerning the DHU to BTS interface is provided in the Digivance ICS Remote Interface Unit User Manual (ADCP-75-113) and in the Digivance ICS Local Interface Unit User Manual (ADCP-75-114).

© 2001, ADC Telecommunications, Inc.

2. Install a DRU as described in the Digital Remote Unit Installation Instructions (ADCP - 75-112). If a donor antenna is used, install the DHU and RIU close to the donor antenna.
3. Conduct an initial performance evaluation and complete the following:
   a) Confirm proper isolation, signal quality, and power levels.
   b) Make test calls from DRU service area and evaluate call quality (confirm with service provider if desired).
   c) Address performance issues as needed.
4. Install the remaining DRUs and also any DEUs as described in the Digital Expansion Unit Installation Instructions (ADCP-75-111). Test call quality and range of each DRU as needed.
5. Check powering and alarm functions of entire system per Digivance ICS specifications.

2.11.4 Phase Four - Performance Evaluation

Complete the following to evaluate the performance of the Digivance ICS:

1. Evaluate the forward path (downlink) and reverse path (uplink) RF signal levels and quality.
2. Make continuous calls from DRU to DRU, checking all service areas, seams, and coverage boundaries for call quality (both DL and UL). Address all quality issues as needed.
3. Place calls both leaving and entering the building(s), in parking lots, etc. Address all quality issues as needed.
4. Contact client/service provider to inform them when the Digivance ICS is operational.

© 2001, ADC Telecommunications, Inc.