FlexWave® Prism Remote Unit and RF Module

Installation Guide

FWPP-504-01 · Issue 1 · March 2016

NOT FOR PUBLIC RELEASE

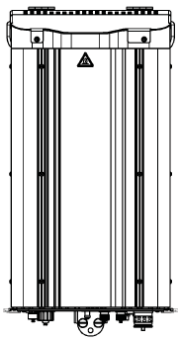

Single-Bay
Prism Remote Unit

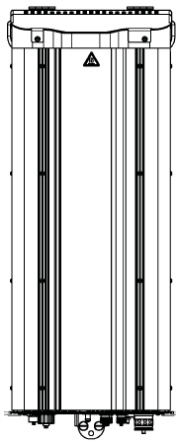

Dual-Bay
Prism Remote Unit

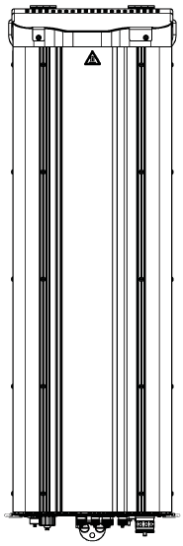

Tri-Bay
Prism Remote Unit

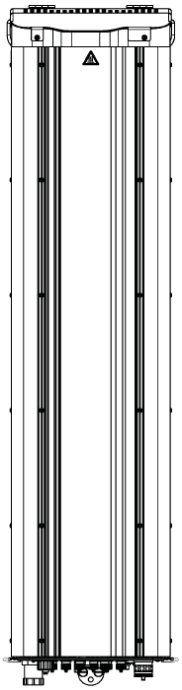

Quad-Bay
Prism Remote Unit

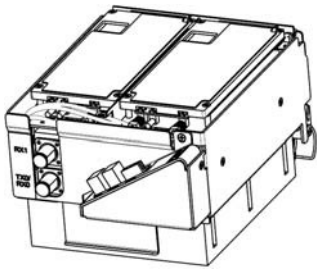

Single-Slot RF Module

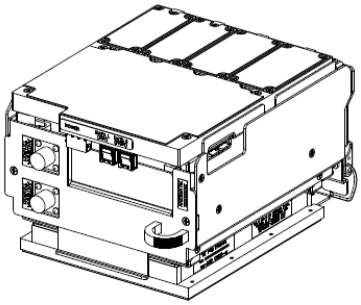

HDM RF Module

Disclaimer

This document has been developed by CommScope, and is intended for the use of its customers and customer support personnel. The information in this document is subject to change without notice. While every effort has been made to eliminate errors, CommScope disclaims liability for any difficulties arising from the interpretation of the information contained herein. The information contained herein does not claim to cover all details or variations in equipment, nor to provide for every possible incident to be met in connection with installation, operation, or maintenance. This document describes the performance of the product under the defined operational conditions and does not cover the performance under adverse or disturbed conditions. Should further information be desired, or should particular problems arise which are not covered sufficiently for the purchaser's purposes, contact CommScope.

CommScope reserves the right to change all hardware and software characteristics without notice.

Copyright

© 2015 CommScope, Inc. All Rights Reserved. All trademarks identified by ® or ™ are registered trademarks or trademarks, respectively, of CommScope, Inc.

This document is protected by copyright. No part of this document may be reproduced, stored in a retrieval system, or transmitted, in any form or by any means, electronic, mechanical photocopying, recording, or otherwise without the prior written permission of CommScope.

Other Trademarks

Names of other products mentioned herein are used for identification purposes only and may be trademarks and/or registered trademarks of their respective companies.

Revision History

Issue	Document Date	Technical Updates
1	December 2015	Adds support for new RF Modules FWP-W4MT000MOD and FWP-T4MT000MOD-L.
2	March 2016	Adds support for HDM TDD RF Module FWP-T4ST000MOD-H. CommScope has acquired TE Connectivity's telecom, enterprise and wireless business, which includes the FlexWave Prism product line; CommScope document FWPP-504-01 replaces TE document TECP-77-265.

Table of Contents

Document Overview 1
- Document Cautions and Notes 3
- Abbreviations Used in this Guide 4

Overview of Prism Remote Units 5
- Prism Remote Unit Components 6
- Ports and Connectors 7
  - Bottom of an AC-Powered Quad-Bay PRU 8
  - DC-Powered Quad-Bay PRU 9
  - Remote Unit Status LED 10
  - SeRF Module LEDs 11

Overview of RF Modules for Prism Remote Units 12
- RF Module Digital/Analog Radio Transceivers 12
- RF Module Types 14
  - Single- and Dual-Bay RF Modules with Classic or SuperDARTs 15
  - HDM RF Modules 16
  - Legacy Dual-Bay 40W RF Modules 17
- RF Module Components 18
  - Linear Power Amplifiers 19
  - Duplexer and Low Noise Amplifier 20
  - Digital Processing Module 20
  - Cables 20
  - LEDS on Narrowband HDM RF Modules 21
  - LEDS on Wideband and Fullband HDM RF Modules 22

Configuring the System with RF 23
- RF Group Assignments for PRU RF Module Bays 23
- Understanding RF Cable Rules 26
  - RF Module Cables and Supported Bay Use for Single-Card, Dual-Card, and HDM RF Modules 26
  - RF Module Cables and Supported Bay Installations for Legacy Dual-Bay 40W RF Modules 27

Install the Prism Remote Unit 29
- Planning for a Prism Remote Unit Installation 29
  - Safety Precautions 29
  - Mounting Plans 30
  - Installation Tools and Supplies 36
    - Tools Required for All Mounting Methods 36
    - Additional Tools and Supplies Required for Steel-Pole Mounting 36
    - Additional Tools and Supplies Required for Wood-Pole Mounting 37
    - Additional Tools and Supplies Required for Flat-Surface Mounting 37
    - Tools and Supplies Required to Connect a PRU 38
- Unpack and Inspect the Prism Remote Unit and Components 39
- Mount the Prism Remote Unit 42
  - Mounting Cautions 42
  - Mounting Methods 42

© March 2016 CommScope, Inc.

Steel Pole Installation Using Steel Banding 43
Pole Mount Installation Using Bolts 46
Wood-Framed Wall Mounting Procedure 47
Masonry Wall Mounting 49
Installing a PRU on the Mounting Bracket 51
Ground the PRU Chassis 52
Connect a Network Cable to the PRU Chassis 53
Connect Fiber Cable to the PRU Chassis 55
Option A: Hardened Multi-Fiber Optic Connector 55
Option B: Fiber Pass-Through Connector 61
Option C: ProAx Connector (Legacy AC-Powered PRUs) 65
Connect the Antenna Cable 69
Connect the Power Wiring 70
Option 1: Connect the AC Power Wiring 70
Option 2: Connect the DC Power Wiring 73
Determine the Circuit Breaker or Fuse for the PRU 76
Power Consumption 76
Power Consumption Tables 76
(Optional) Connect the Prism Remote Unit to a UPS 78
Install the RF Module(s) 80
Safety Precautions 80
Guard against Damage from Electro-Static Discharge 81
Unpack and Inspect the RF Module 81
Remove Release Liners from the RF Module 82
Check the DC Power Switch for the Module Bay 84
Dual-Bay Modules Only—Remove the Module Bay Shelf 85
Install the RF Module into the Prism Remote Chassis 86
Secure RF Module Latches 94
Connect Latches on Single-Bay and HDM RF Modules 94
Connect Latches on Dual-Bay RF Modules 95
Latches on Legacy Dual-Bay 40W RF Modules 96
Verify that the RF Module Mounting Hook is Engaged 96
Connect the RF Module Cables to the PRU Chassis 97
Connecting Cables in a Single-Bay RF Module Installation 97
Connecting Cables in a Dual-Bay RF Module Installation 100
Power on the RF Module(s) and the Prism Remote Unit 105
Close the Remote Unit Door and Solar Shield 107
Provision the Prism Remote Unit 108
FlexWave Notch Filter (FWP-SPRINTFILTER) 108

© March 2016 CommScope, Inc.

Fan Module Maintenance **112**
Annual Fan Checkup 112
Potential Fan Alarms 112
Replacing the Fan Module 112
Specifications **115**
Standards Certification **117**
DCCS Global Technical Support **119**
Helpline Support **119**
Online Access **119**
Email **119**
Return Material Authorizations 119
Technical Training 120
Accessing FlexWave Prism User Documentation 120

© March 2016 CommScope, Inc.

© March 2016 CommScope, Inc.

Document Overview

This document provides the information you need to install a CommScope FlexWave® Prism Remote Unit (PRU). Installation instructions are also provided for the following Prism Remote Unit RF Modules that reside in a PRU:

- Single-Bay RF Modules, which includes the HDM and TDD RF Modules
- Dual-Bay RF Modules, which includes the Dual-Band RF Modules and Legacy 40W RF Modules.

NOTE: RF Modules can be ordered separately or may come pre-installed in a Prism Remote Unit.

Table 1 lists the Prism Remote Unit chassis and Table 2 through Table 8 on page 3 list the Prism RF Modules that this installation guide supports.

Table 1. *Supported FlexWave Prism Remote Unit Chassis*

Catalog Number	Description
FP1-XXXXXXXXXXXRU	Single-Bay Prism Remote
FP2-XXXXXXXXXXXRU	Dual-Bay Prism Remote
FP3-XXXXXXXXXXXRU	Tri-Bay Prism Remote
FP4-XXXXXXXXXXXRU	Quad-Bay Prism Remote

Table 2. *Supported High-Density Module (HDM), Single Bay RF Modules*

Catalog Number	Description
FWP-L4MT000MOD	20W 700 LABC Module, MIMO
FWP-L4MTU4MMOD	20W 700 LABC/700uC, Dual, Non-Diversity
FWP-U4MT000MOD	20W 700 uC Module, MIMO
FWP-44MT000MOD	20W 800 MIMO, with two External Filters
FWP-441T841MOD	20W 800 SMR/ 1900 PCS, Dual with 800 External Filter
FWP-C4MT000MOD	20W 850 Cell/1900 PCS, Dual, Non-Diversity
FWP-B4MT000MOD	20W 850 MIMO
FWP-B410000MOD	20W 850 Wideband Cell, Non-Diversity
FWP-B810100MOD	40W 850 Wideband Cell, Non-Diversity
FWP-84MT000MOD	20W 1900 PCS MIMO, Non-Diversity
FWP-84MTA4MMOD	20W 1900/2100 Dual
FWP-W4MT000MOD	20W 2300 WCS FDD, MIMO
FWP-T4MT000MOD-L	20W 2500 TDD Low, MIMO
FWP-T4ST000MOD-H	20W 2500 TDD High, SISO, 2615-2690
FWP-A4MT000MOD	20W AWS MIMO, Non-Diversity
FWP-A416000MOD	20W AWS, Non-Diversity
FWP-A81T000MOD	40W AWS SISO, Non-Diversity
FWP-8416000MOD	20W PCS, Non-Diversity
FWP-881T000MOD	40W PCS SISO, Non-Diversity

© March 2016 CommScope, Inc.

Table 3. *Supported Single SuperDART, Single Bay RF Modules*

Catalog Number	Description
FWP-I210000MOD	6.5W 800 APAC, Non-Diversity, Classic (Extended 1 MHz)
FWP-6216000MOD	10W 900 EGSM, Non-Diversity
FWP-K216000MOD	10W 900 P-GSM, Non-Diversity
FWP-F216000MOD	10W APAC EGSM, Non-Diversity
FWP-7416000MOD	20W 1800 GSM, Non-Diversity
FWP-9416D00MOD	20W 2100 UMTS Module, DIV Ready
FWP-9416000MOD	20W 2100 UMTS, Non-Diversity
FWP-L416000MOD	20W 700 Lower ABC Module, Non-Diversity
FWP-U416000MOD	20W 700 LTE, UPPER C, SISO, Non-Diversity
FWP-U816100MOD	40W 700 Upper C, Non-Diversity

Table 4. *Supported Dual SuperDART, Single Bay, Non-Diversity RF Modules*

Catalog Number	Description
FWP-741S000MOD	20W GSM 1800
FWP-841S000MOD	20W PCS 1900 12S
FWP-A41S000MOD	20W AWS 2100
FWP-941S000MOD	20W UMTS 2100

Table 5. *Supported Single SuperDARTs, Diversity, Single Bay RF Modules*

Catalog Number	Description
FWP-6226000MOD	10W 900 EGSM
FWP-K226000MOD	10W 900 P-GSM
FWP-7426000MOD	20W 1800 GSM
FWP-9426000MOD	20W 2100 UMTS
FWP-A426000MOD	20W AWS
FWP-8426000MOD	20W PCS

Table 6. *Supported Classic DART, Single Bay RF Modules*

Catalog Number	Description
FWP-4210000MOD	6.5W 800 SMR Module, Non-Diversity
FWP-J410D00MOD	20W 850 Cell (870-890), Diversity Ready
FWP-8420000MOD	20W 1900 PCS Diversity
FWP-8410000MOD	20W 1900 PCS Non-Diversity
FWP-A420000MOD	20W 2100 AWS Diversity
FWP-A410000MOD	20W 2100 AWS Non-Diversity
FWP-B420000MOD	20W Wideband Cell, Diversity

© March 2016 CommScope, Inc.

Table 7. *Supported Classic DART, Two Bay RF Modules*

Catalog Number	Description
FWP-8810000MOD	40W PCS, Non-Diversity
FWP-A810000MOD	40W AWS, Non-Diversity

Table 8. *Supported Dual Classic DART, Two Bay RF Modules*

Catalog Number	Description
FWP-D210000MOD	6.5W 800/900 ESMR, Non-Diversity

Document Cautions and Notes

Two types of messages, identified below, appear in the text:

CAUTION! **Cautions indicate operations or steps that could cause personal injury, induce a safety problem in a managed device, destroy or corrupt information, or interrupt or stop services.**

NOTE: **Notes contain information about special circumstances.**

© March 2016 CommScope, Inc.

Abbreviations Used in this Guide

AC	Alternating Current
AMP	Amperes
AUX	Auxiliary
AWG	American Wire Gauge
C	Centigrade
CAT	Category
CDRH	Center for Diseases and Radiological Health
cm	Centimeter
DART	Digital/Analog Radio Transceiver
dB	Decibel
dBm	Decibel-milliwatts
DC	Direct Current
DCS	Distributed Call Signaling
DD	Digital Dividend
DIV	Diversity
DPA	Dynamic Phase Alignment
DPM	Digital Processing Module
EMC	Electromagnetic Compatibility
ESD	Electro-Static Discharge
EU	European Union
F	Fahrenheit
FCC	Federal Communications Commission
FDA	Food and Drug Administration
FRU	Fullband Remote Unit
FWD	Forward
HDM	High Density Module
HMFOC	Hardened Multi-Fiber Optic Connector
Hz	Hertz
IC	Industry Canada
IP	Internet Protocol
LAN	Local Area Network
LC	Lead Covered
LED	Light-Emitting Diode
LVDS	Low-Voltage Differential Signaling
M	Meter
Mbps	Megabits Per Second
MDI	Medium Dependent Interface
MHz	Megahertz
MIMO	Multiple-Input Multiple-Output
MM	Millimeter
MOD	Module
MPE	Maximum Permissible Exposure
NC	Normally Closed
NO	Normally Open
NOC	Network Operations Center
OSP	Outside Plant
PA	Power Amplifier
PA	Power Amplifier
PRIM	Primary
PRU	Prism Remote Unit
PWR	Power
REV	Reverse
RF	Radio Frequency
Rx	Receive
SDART	Super Digital/Analog Radio Transceiver
SeRF	Serialized RF
SFP	Small Form-Factor Pluggable
SYNTH	Synthesizer
TDD	Time-Division Duplex
TIM	Thermal-Interface Material
Tx	Transmit
UL	Underwriters' Laboratories, Inc.
UMTS	Universal Mobile Telecommunications System
UPS	Uninterrupted Power Supply
VAC	Volts, Alternating Current
W	Watt
WCS	Wireless Communications Services
WDM	Wavelength Division Multiplexer

© March 2016 CommScope, Inc.

Overview of Prism Remote Units

FlexWave PRUs control RF emissions, interface with the FlexWave Prism Host Unit II and perform the optical to electrical conversion for transport to the antennas. The PRU is an environmentally-sealed unit designed for outdoor use that houses the electronic assemblies such as the Digital/Analog Radio Transceiver (DART) board and the Power Amplifier, and seals out dirt and moisture. The PRU uses fans located on the top of each unit to cool its chassis. The antenna cable connectors, fiber connectors, AC or DC power connector, and the unit status indicator are located on the bottom of the unit.

A PRU supports or provides the following basic functions:

- Receives on the forward path the digitized spectrum from the Host and converts the spectrum back into an RF signal to be distributed via an externally mounted antenna system. On the reverse path, the PRU digitizes the designated RF spectrum and digitally transports it over single mode fiber or Millimeter Wave (MMW) to the Host.
- Provides RF interface (antenna port) for the antennas.
- Accepts either AC or DC power input.

© March 2016 CommScope, Inc.

Prism Remote Unit Components

Figure 1 shows the main components of the PRU and its corresponding RF Modules.

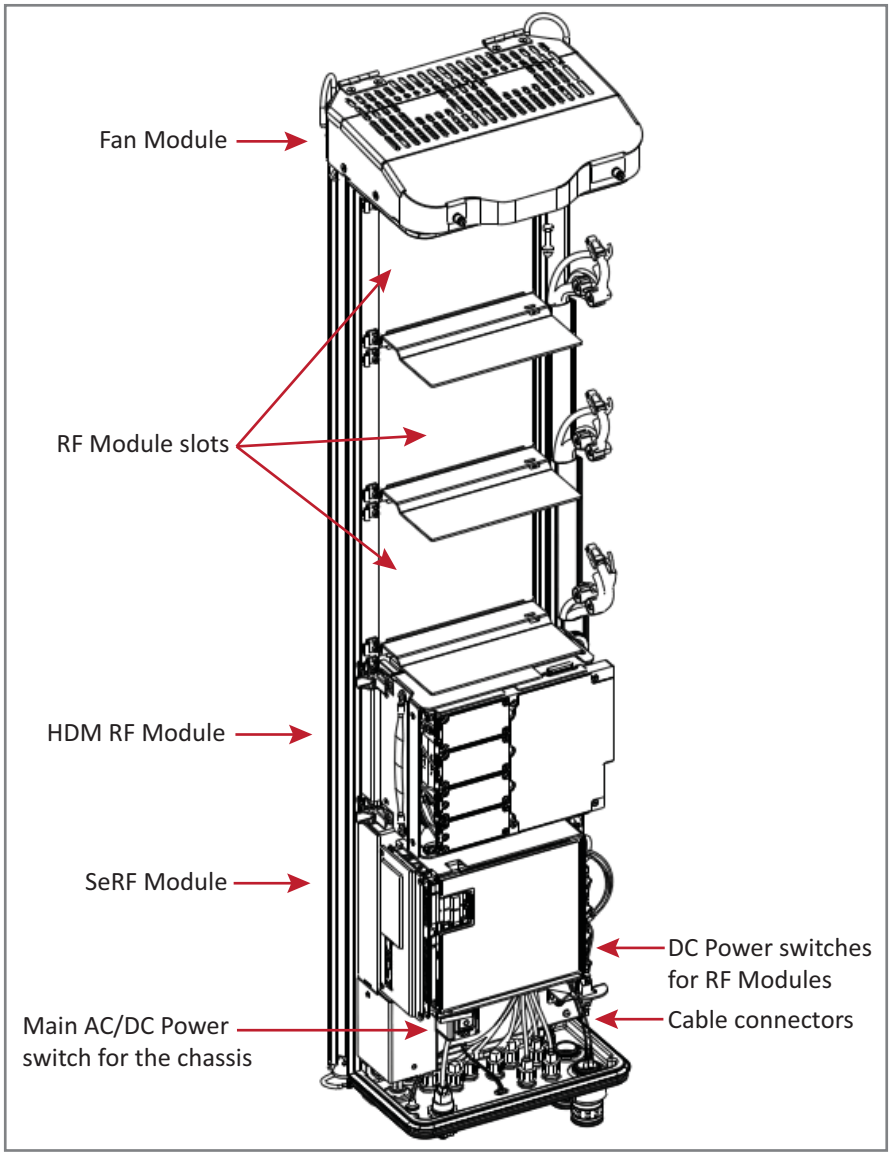

Figure 1. Prism Remote Unit Components

© March 2016 CommScope, Inc.

Ports and Connectors

Make sure you refer to the section that describes the PRU deployed in your installation. "Bottom of an AC-Powered Quad-Bay PRU" on page 8 and "DC-Powered Quad-Bay PRU" on page 9 shows the differences between an AC-powered and a DC-powered PRU. The differences will be the same for Single-Bay, Dual-Bay, and Tri-Bay chassis. Additionally, for both the AC-Powered and DC-Powered PRUs:

- The number of Antenna connectors on the bottom of a PRU corresponds to the number of RF Module bays in that PRU model, where there are two Antenna connectors per bay. For example:
  - There are four RF Module bays in a Quad-Bay PRU, so there are eight Antenna connectors.
  - There is one RF Module bay in the Single-Bay PRU, so there are two Antenna connectors.
- The Single-Bay PRU only has one Fiber connector whereas the other three PRU models have two.

© March 2016 CommScope, Inc.

Bottom of an AC-Powered Quad-Bay PRU

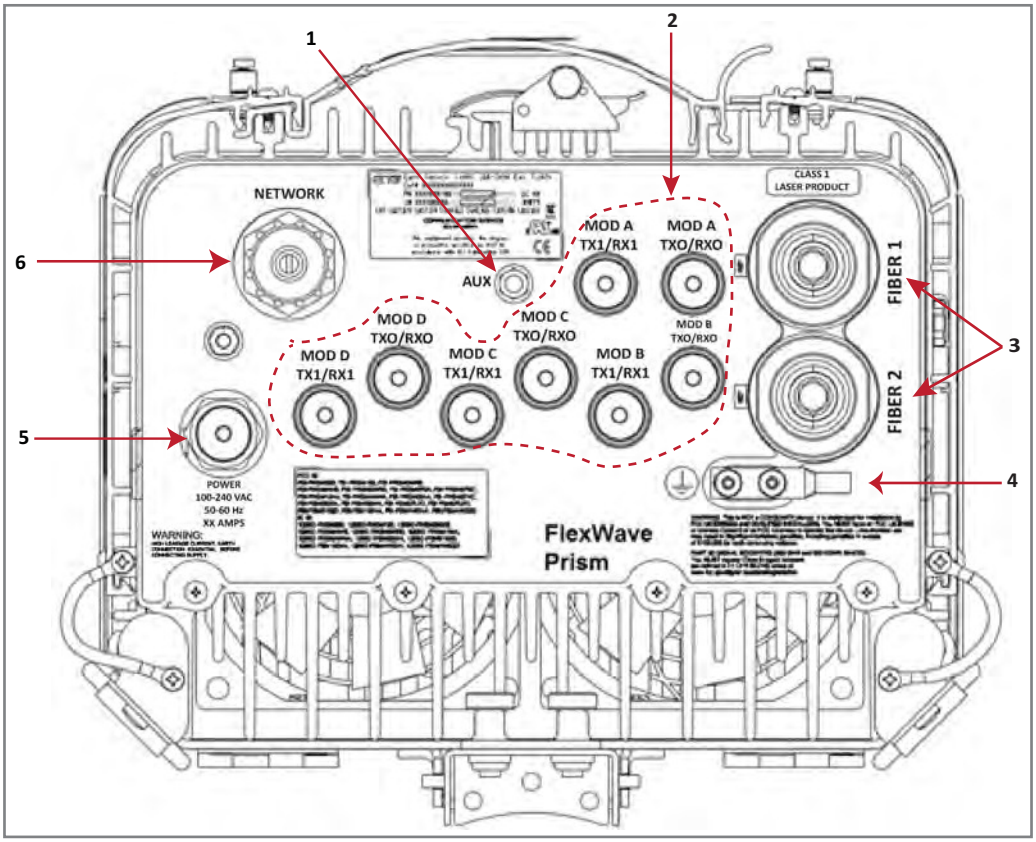

Ref #	Component	Device	Function
1	AUX connector	Four contact closure inputs	Connection points for two external alarm inputs.
2	Antenna connectors	Eight Input/Output Impedance 50Ω N-Type connectors (female)	Connection points between the PRU and antennas that are labeled **MOD X TXO/RXO** or **MOD X TX1/RX1** (where the first **X** can be **A**, **B**, **C**, or **D**). For further information, see "Understanding RF Cable Rules" on page 26.
3	Fiber connectors	One of the following: • Hardened Multi-Fiber Optic Connector (shown) • Fiber Pass-Through • ProAx connectors that provide four BX5 connectors (Legacy PRUs)	Connection points between the PRU and the Outside Plant (OSP) box. The Single-BAY PRU only has the Fiber 1 connector. For further information on the three Fiber connector types, see "Connect Fiber Cable to the PRU Chassis" on page 55.
4	Dual-Ground connector	Ground connector	Grounds the PRU.
5	AC Power port	Sealed 3-pin port	Connection point between the PRU and an AC power junction box.
6	Network Connector port	RJ-45 female connector	LAN Extension of the Host Unit Network that provides access to the Prism Network for access and monitoring via an up to a 100 Mbps IP back-haul connection to remote devices.

© March 2016 CommScope, Inc.

DC-Powered Quad-Bay PRU

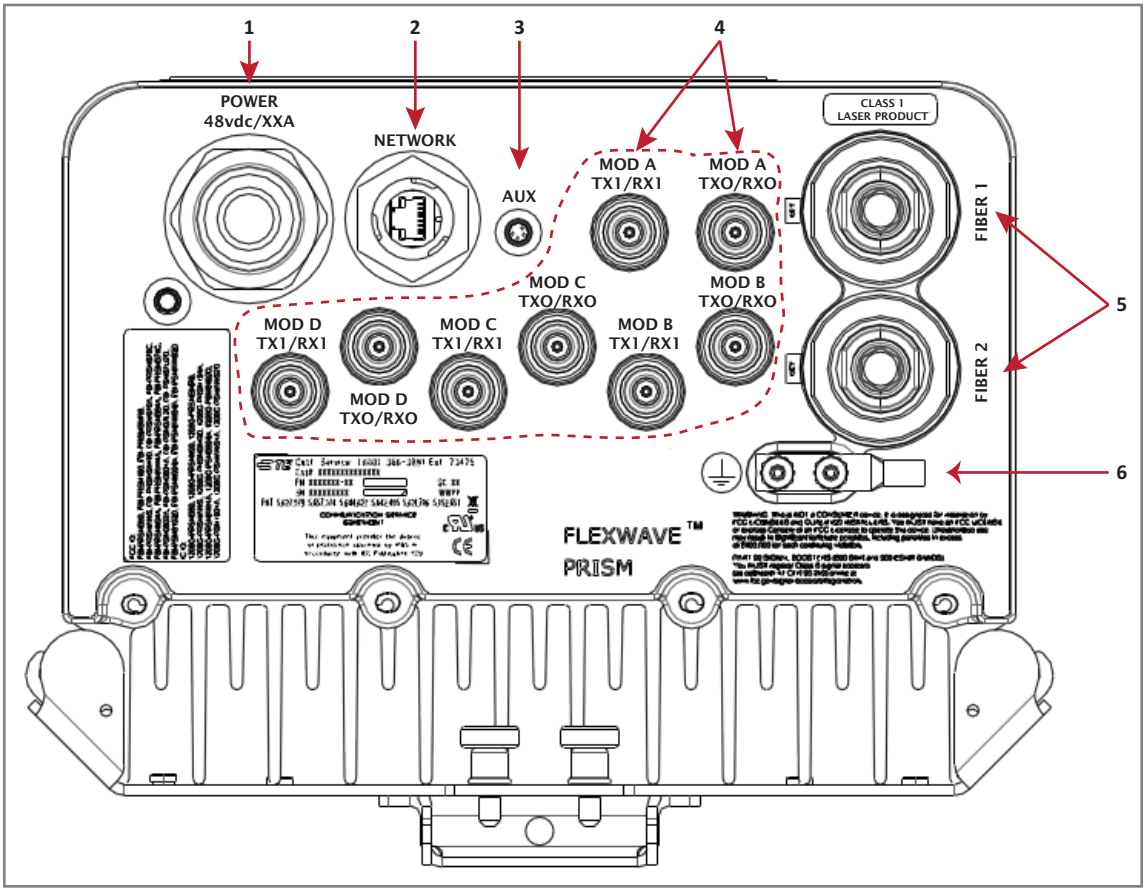

Ref #	Component	Device	Function
1	DC Power port	Pass-through gland	Connection point between the PRU and a -40 to -60 Vdc power source.
2	Network Connector port	RJ-45 female connector	LAN Extension of the Host Unit Network that provides access to the Prism Network for access and monitoring via an up to a 100 Mbps IP back-haul connection to remote devices.
3	AUX connector	Four contact closure inputs	Connection points for two external alarm inputs.
4	Antenna connectors	Eight Input/Output Impedance 50Ω N-Type connectors (female)	Connection points between the PRU and up to eight antennas that are labeled **MOD X TXO/RXO** or **MOD X TX1/RX1** (where the first **X** can be **A**, **B**, **C**, or **D**). For further information, see "Understanding RF Cable Rules" on page 26.
5	Fiber connectors	One of the following: • Hardened Multi-Fiber Optic Connector (shown) • Fiber Pass-Through • ProAx connectors that provide four BX5 connectors (Legacy PRUs)	Connection points between the PRU and the Outside Plant (OSP) box. For further information on the three Fiber connector types, see "Connect Fiber Cable to the PRU Chassis" on page 55.
6	Dual-Ground connector	Ground connector	Grounds the PRU.

© March 2016 CommScope, Inc.

Remote Unit Status LED

This section illustrates the Status LED on a Quad-Bay PRU. The Status LED for the Single-Bay, Dual-Bay, and Tri-Bay PRUs is in the same location and functions the same as the Status LED for the Quad-Bay PRU.

The Remote Unit has a single red Status LED that is located on the bottom of the chassis. At system startup, the Status LED is red to indicate that the Remote Unit is powering up and that the SeRF processor does not yet control the Remote Unit; the Status LED will remain red for approximately one minute. If after three minutes the Status LED is still red, it indicates the Remote Unit is unable to boot up. (Some common failures that can prevent the PRU from booting up include a faulty Power Supply, SeRF, or Compact Flash Card.)

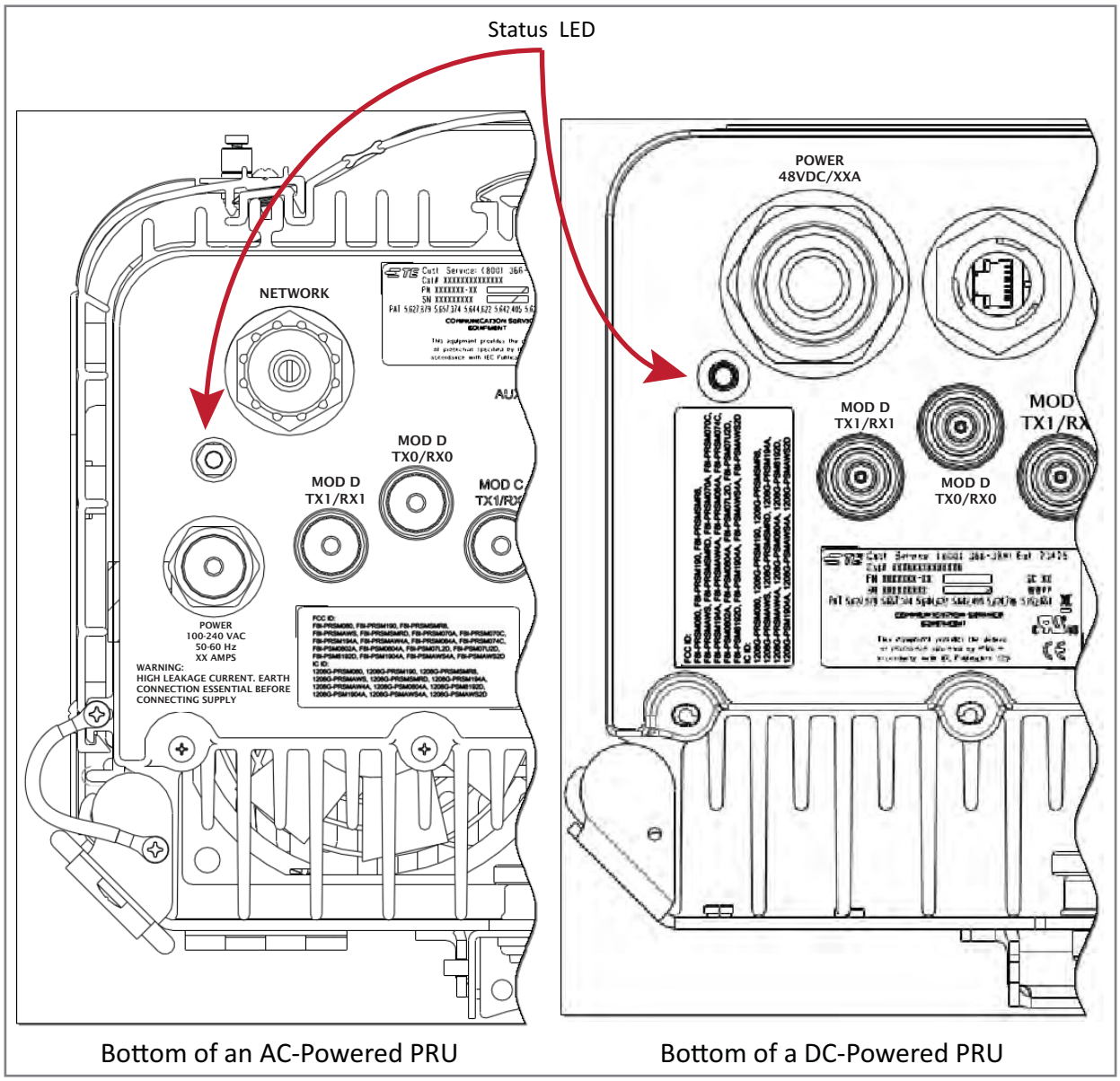

Bottom of an AC-Powered PRU

Bottom of a DC-Powered PRU

© March 2016 CommScope, Inc.

SeRF Module LEDs

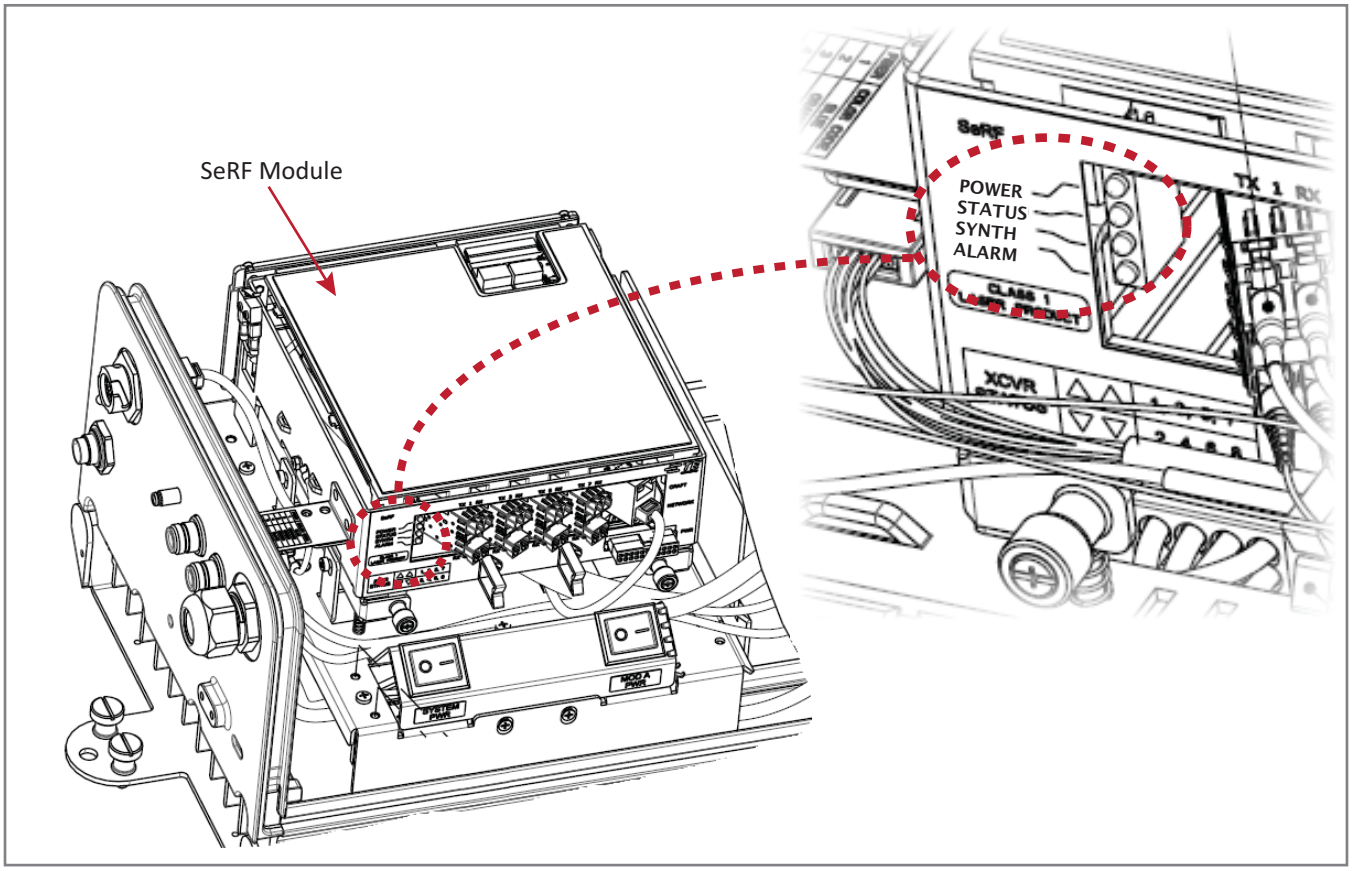

LED	LED Color	Description
POWER	• GREEN	• Power OK and operating properly
	• RED	• Power supply out of tolerance
	• OFF	• No power present
STATUS	• GREEN • RED	• No alarm for the SeRF II Module • Initial bootup sequence and should become GREEN within 1 minute; if RED after bootup, a Major alarm exists for the SeRF Module
SYNTH	• GREEN	• Locked
	• RED	• Unlocked or is in initial bootup sequence
ALARM	• GREEN	• No major alarm is present in the PRU or in any downstream unit
	• RED	• Initial bootup sequence, or a major alarm is present in the PRU or in any downstream unit

NOTE: **The SeRF Module LEDs automatically enter a LED Roll Test sequence (cycle through its colors) when the SeRF FPGA is loaded (approximately 4 minutes after initial power up) or when a SeRF synthesizer failure occurs. The LED Roll Test sequence takes approximately two seconds to complete, and cycles the ALARM, SYNTH, and STATUS LEDs, after which the LEDs begin normal operation. Additionally, an active SeRF Synthesizer failure causes the same LED sequencing approximately every minute until the SeRF failure clears.**

© March 2016 CommScope, Inc.

Overview of RF Modules for Prism Remote Units

Dependent on the Prism Remote Unit model, a PRU enclosure can have from one to four RF Module bays and can support up to four RF Modules, as indicated by the model name. That is, the Single-Bay PRU has one RF Module bay and can only support one RF Module, and the Quad-Bay PRU has four RF Module bays and can support up to four RF Modules.

The function of the Remote Unit RF Modules on the Forward Path is to:

- convert the digitized RF transported from the Host to Analog RF
- amplify the Analog RF signal
- provide signal filtering.

The function of the Remote Unit RF Modules on the Reverse Path is to:

- convert the Analog RF from the handset to Digital RF for transport to the Host
- amplify the Digital RF signal
- provide signal filtering.

NOTE: The RF Modules are field replaceable, but cannot be serviced in the field.

RF Module Digital/Analog Radio Transceivers

Each RF Module can support any of the following Digital/Analog Radio Transceiver (DART) combinations:

- one Classic DART or one Single SuperDART
- two Classic DARTs (i.e., the 6.5W 800/900 ESMR Module, Non-Diversity, Classic)
- two Classic DARTs—Diversity
- two Single SuperDARTs—Diversity
- one Dual SuperDART
- one or two sets of Tx and Rx Boards (HDM).

Each RF Module will have up to two 6-timeslot DARTs or one 12-timeslot DART per RF Module.

The DART type determines the maximum number of links, where there can be up to eight Classic DARTs or Single SuperDARTs that support 39 MHz each, or up to 4 Dual SuperDARTs that support up to 75MHz each.

© March 2016 CommScope, Inc.

Prism supports the DART Module types listed below.

- Classic DARTs are 6-timeslot DARTs that support up to 35 MHz contiguous bandwidth (see Table 9).
- Single SuperDARTs are 6-timeslot DARTs that support two non-contiguous bands in the entire frequency range of the DART, but cannot exceed 39 MHz total RF bandwidth (see Table 10).
- Dual SuperDARTs are 12-timeslot DARTs that support up to 60-75 MHz (see Table 11 on page 14)

NOTE: Industry Canada PCS 20 dB nominal bandwidth is less than 61.5 MHz.

NOTE: Industry Canada AWS 20 dB nominal bandwidth is less than 47.2 MHz

Table 9. *Single-Position Classic DARTs*

DART Module Type	Maximum Bandwidth (MHz)	Maximum Fiber Slots
800 APAC iDEN Classic	19	3
800 SMR Classic	7*	3
850 Cell Classic	25	4
900 SMR Classic	5	1
* Classic Prism RF Modules and Spectrum RAU support 18 MHz; Prism HDM 800 only supports 7 MHz, per Sprint direction.		

Table 10. *Single-Position SuperDARTs*(1)

DART Name	Used in…		Maximum Frequency Span (MHz)	Maximum Bandwidth (MHz)	Maximum Fiber Slots
	Host Units	HEUs			
700 IABC SGL SuperDART	Yes	Yes	18	18	3
700 uC SGL SuperDART	Yes	Yes	10	10	2
900 EGSM SGL SuperDART	Yes	No	35	35	6
1800 GSM SGL SuperDART	Yes	No	75	39	6
1900 PCS SGL SuperDART	Yes	Yes	70	39	6
2100 AWS SGL SuperDART	Yes	Yes	45	39	6
2100 UMTS SGL SuperDART	Yes	No	60	39	6
2300 WCS FDD, MIMO	Yes	No	10	10	2
2500 TDD Low, MIMO					
2500 TDD High, SISO	Yes	No	75	75	12

(1) When using a Host Unit with both a SeRF II and System Board II or III, the bandwidths and fiber for the following Single SuperDARTs can be greater than 6 fiber slots, for full-band capability, when used in Host Unit Slots 1 and 3: 1800 GSM SGL SuperDART; 1900 PCS SGL SuperDART; 2100 AWS SGL SuperDART; 2100 UMTS SGL SuperDART.

This requires 12 fiber slots when full-band passband is selected for these Single SuperDARTs in Host Unit DART positions 1 and 3.

© March 2016 CommScope, Inc.

Table 11. *Dual-Position SuperDARTs*

DART Module Type	Maximum Bandwidth (MHz)	Maximum Fiber Slots
1800 GSM DL SuperDART	75	12
1900 PCS DL SuperDART	70	12
2100 AWS DL SuperDART	45	8
2100 UMTS DL SuperDART	60	12

RF Module Types

The Remote Unit RF Modules are available in the following formats, and as described in the following sections:

- "Single- and Dual-Bay RF Modules with Classic or SuperDARTs" on page 15
- "HDM RF Modules" on page 16
- "Legacy Dual-Bay 40W RF Modules" on page 17.

© March 2016 CommScope, Inc.

Single- and Dual-Bay RF Modules with Classic or SuperDARTs

Figure 2 shows examples of Single- and Dual-Bay RF Modules, both of which have two DARTs.

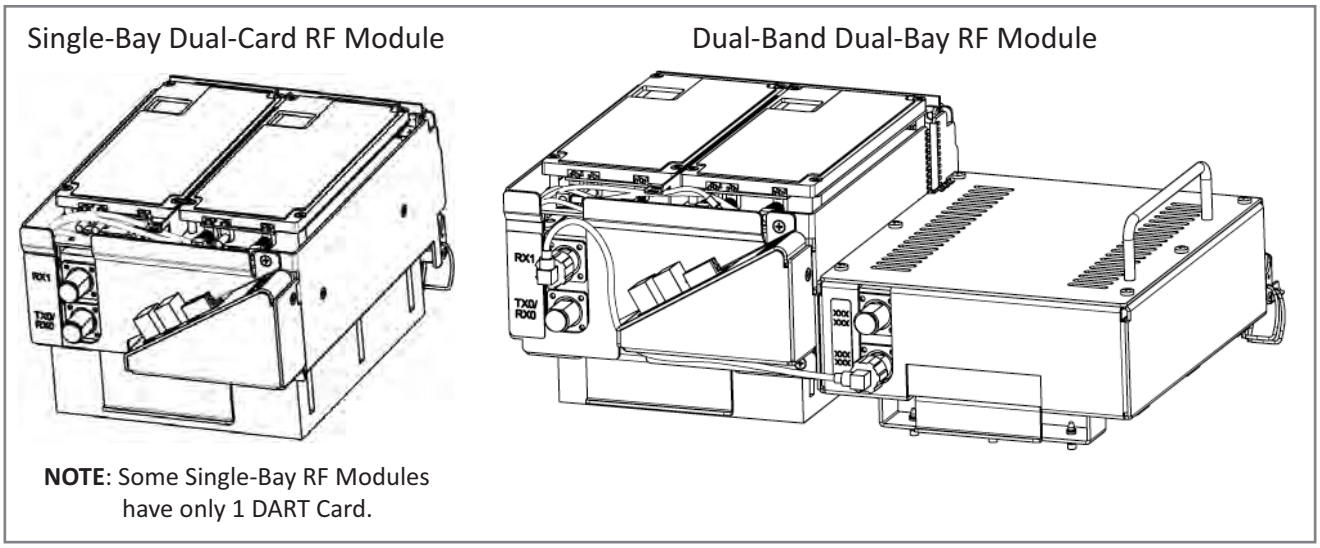

Figure 2. Single- and Dual-Bay RF Modules

Single-Bay RF Modules have the following elements:

- one or two DARTs
- one Duplexer that comprises
  - one Low Noise Amplifier (LNA)
  - one Power Detector (PD)
- one Linear Power Amplifier (LPA)
- one Remote DART Interface (RDI) board.

Dual-Band Dual-Bay RF Modules have the following elements:

- two DARTs
- two Duplexers, each of which comprises
  - one Low Noise Amplifier (LNA)
  - one Power Detector (PD)
- one Linear Power Amplifier (LPA)
- one Remote DART Interface (RDI) board.

© March 2016 CommScope, Inc.

HDM RF Modules

High-Density Module (HDM) RF Modules (Figure 3) are designed to provide the ability to deploy either a two 20W Multiple Input Multiple Output (MIMO) paths of the same band, known as a MIMO RF Module; two 20W Single Input Single Output (SISO) with two different bands, known as dual RF Module; or a single 40W Single Input Single Output (SISO) RF Module within a single-bay of a PRU.

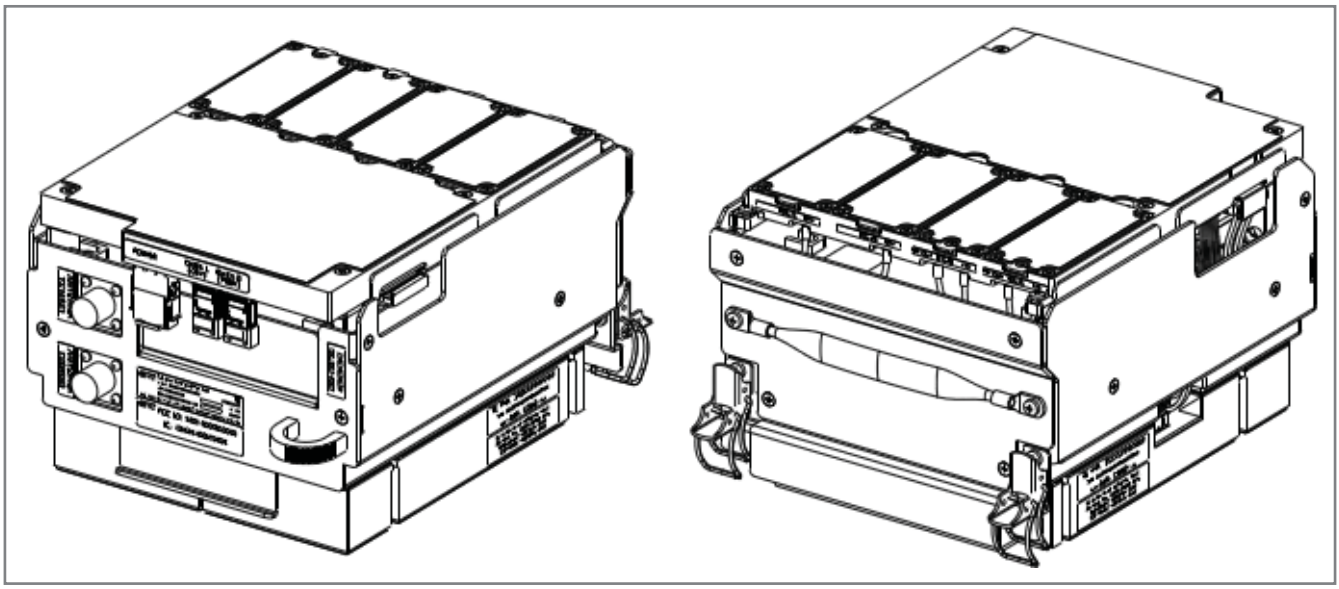

Figure 3. HDM RF Modules

An HDM RF Module does the following:

- interfaces with one Host DART-either Classic or SuperDART, or one CDIU
- supports two non-contiguous RF slices up to 35 MHz total bandwidth in a Dual or MIMO configuration
- supports full bandwidth in a SISO configuration, up to 75 MHz
- supports 20W per band/Path in a Dual/MIMO RF Module
- supports up to 40W RF output power in a SISO RF Module.

The components of a PRU HDM RF Module are dependent on the module type, as listed in Table 12.

Table 12. *Components of PRU HDM RF Modules*

RF Module Type	DPM	LPA	Duplexer	LNA	Power Detector	Rx Card	Tx Card
SISO	1	1	1	1	1	1	1
MIMO/Dual Band Module	1	2	2	2	2	2	2

© March 2016 CommScope, Inc.

Legacy Dual-Bay 40W RF Modules

The Legacy Dual-Bay 40W RF Module (Figure 5) is designed for AWS and PCS frequencies and is supported only by Classic DARTs. The Legacy Dual-Bay 40W RF Module comprises:

- one Classic DART
- one Duplexer that comprises
  - one Low Noise Amplifier (LNA)
  - one Power Detector (PD)
- two Power Amplifiers (PAs)
- one Remote DART Interface (RDI) board.

NOTE: This manual describes how to install the PCS 1900 and AWS 2100 Non-Diversity RF Modules.

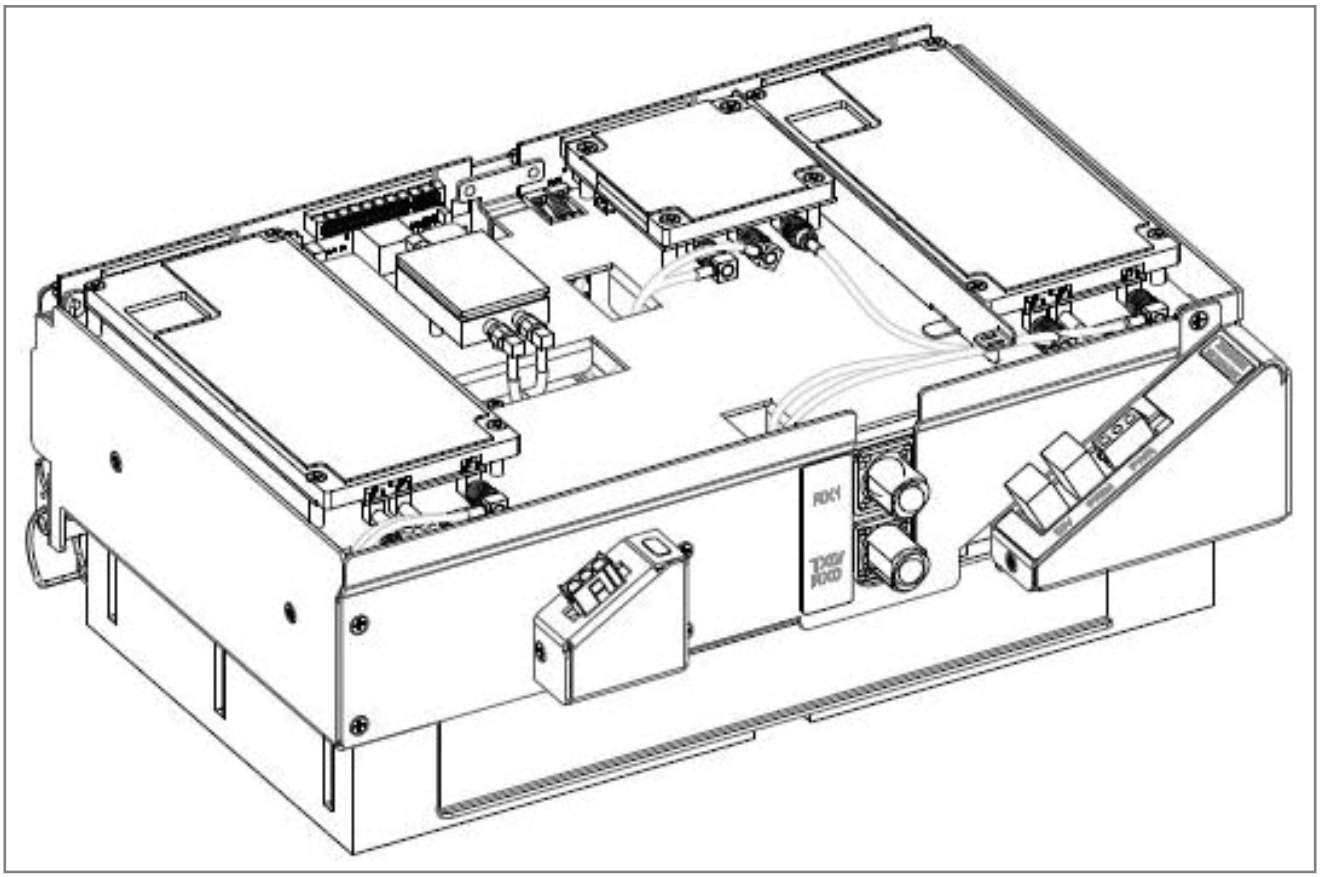

Figure 4. Legacy Dual-Bay 40W RF Module

© March 2016 CommScope, Inc.

RF Module Components

Figure 5 shows typical RF Module components, using the Single-Bay RF Module as an example, and Figure 6 shows the components of an HDM RF Module.

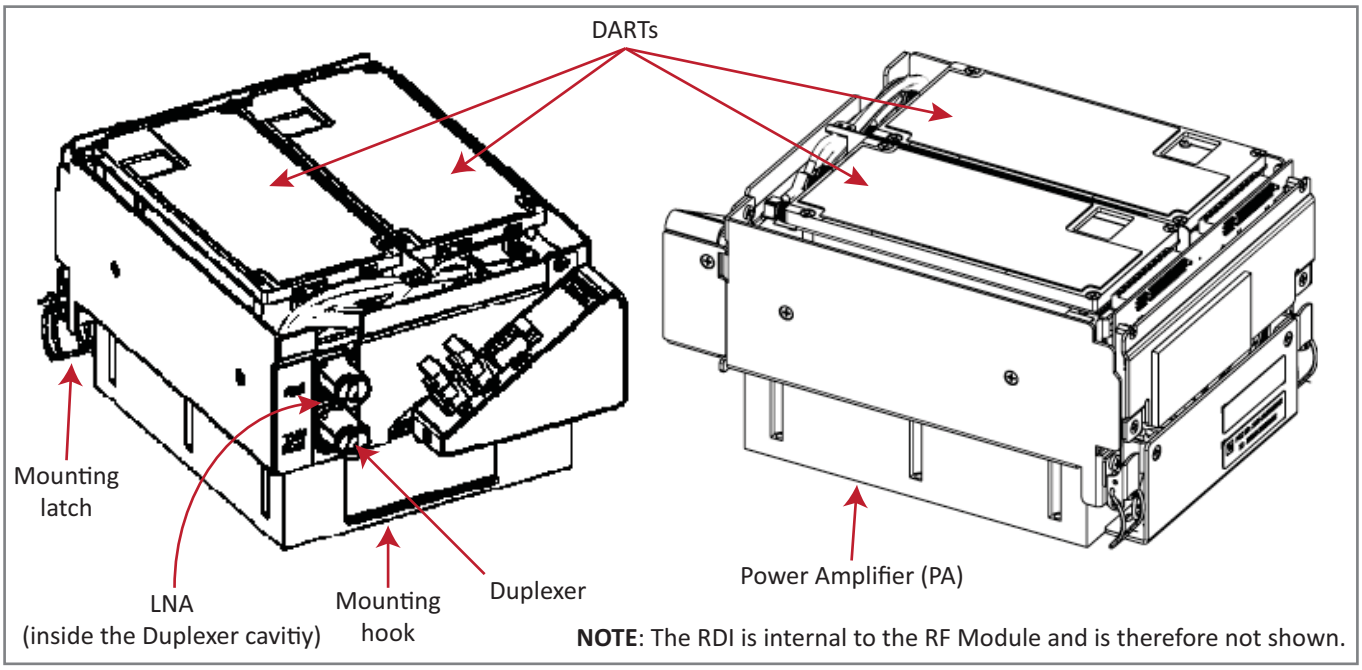

Figure 5. Single-Bay RF Module Components

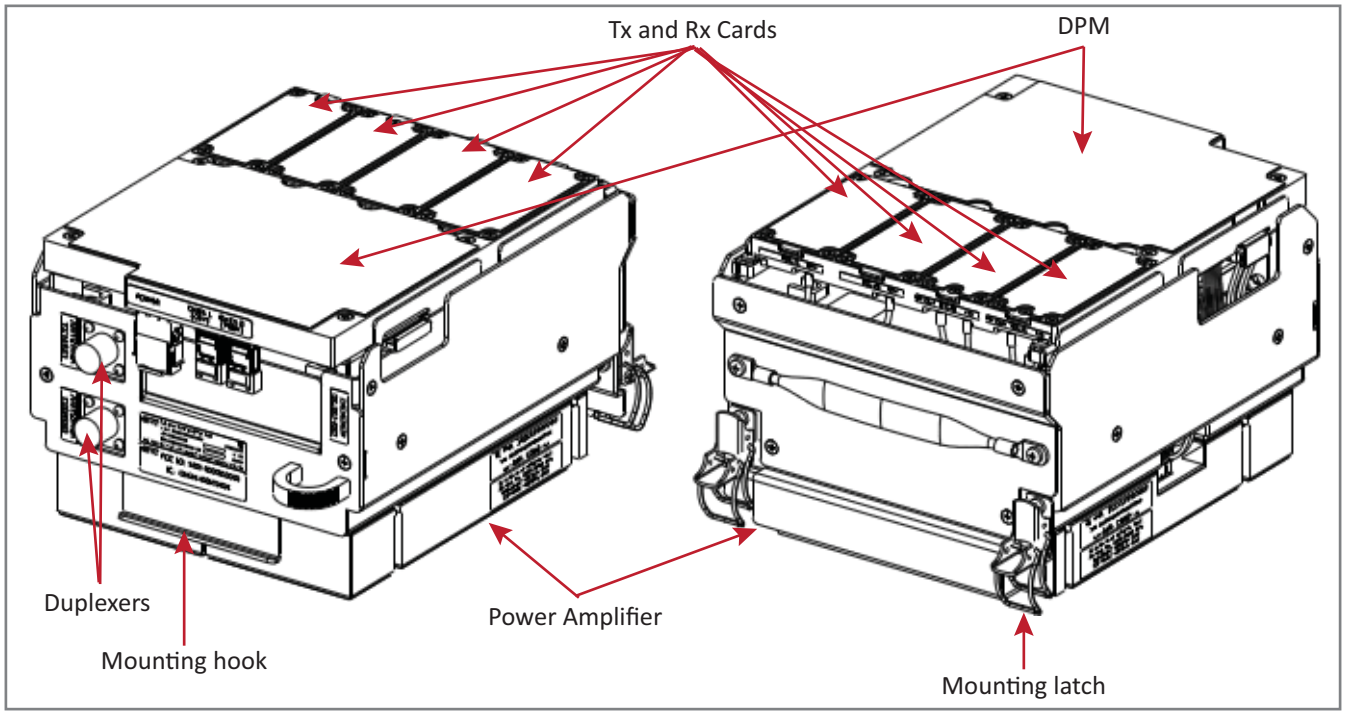

Figure 6. HDM RF Module Components

© March 2016 CommScope, Inc.

Linear Power Amplifiers

The Linear Power Amplifier (LPA) is a high quality broadband RF amplifier used for achieving Prism product-rated power for the Remote Unit Tx forward path RF. The PAs are pass-band specific, with the maximum composite Tx power levels listed in Table 13 for Single-Card, Dual-Card, and HDM RF Modules and Table 14 on page 20 for Legacy Dual-Bay 40W RF Modules.

The LPA is housed within the RF Module, and is not field serviceable.

Table 13. *LPA Maximum Composite Tx Power Levels for Single-Card, Dual-Card, and HDM RF Modules*

			Bandwidth (MHz) supported across entire spectrum*				
Passband	Maximum dBm	Watts	HDM		Single Super DART	Classic DART	Dual SuperDART
			Dual/MIMO	SISO			
700 LTE Lower ABC	43	20	18	18	18	NA	NA
700 LTE Upper C	43	20	10	10	10	NA	NA
	46	40	10	10	10	NA	NA
800 SMR	43	20	7	7	NA	18	NA
850 Cellular	43	20	25	25	NA	25	NA
	46	40	25	25	NA	25	NA
900 EGSM	40	10	35	35	35	NA	NA
900 PGSM	40	10	25	25	25	NA	NA
900 SMR	38	6.5	NA	NA	NA	5	NA
1800 DCS	42	15.8	35	NA	39	NA	75
1900 PCS	43	20	35	65	39	NA	70
	46	40	NA	65	39	NA	70
2100 AWS	43	20	35	45	39	NA	45
	46	40	NA	45	39	NA	45
2100 UMTS	42	15.8	35	NA	39	NA	60
2300 WCS	43	20	10	10	10	NA	NA
2500 TDD Low							
2500 TDD High	43	20	NA	75	75	NA	75

* The International bands (1800 DCS, 2100 UMTS, 2600 MIMO) Dual/MIMO RF Modules only support 35 MHz contiguous, as opposed to 35 MHz non-contiguous for PCS and AWS Dual/MIMO RF Modules.

© March 2016 CommScope, Inc.

Table 14. *LPA Maximum Composite Tx Power Levels for Legacy Dual-Bay 40W RF Modules*

Passband	Maximum dBm	Watts	Bandwidth (MHz) supported across entire spectrum Classic DART
PCS 1900	+46	40	35
AWS 2100	+46	40	35

NOTE: Industry Canada 20 dB Pass Band Model Number FWP-C4MT000MOD Cellular 850 MHz = 26.3 MHz and the PCS 1900 = 66.8 MHz.

Duplexer and Low Noise Amplifier

The RF Module provides the Remote Unit with an internal Duplexer that is optimized to provide the desired RF band-pass filtering and in-band equipment isolation between FWD and REV paths. The Duplexer provides the filtering necessary to the transmit and receive paths to and from the connected antenna.

The Duplexer for the Single- and Dual-Bay RF Modules and the Legacy Dual-Bay 40W RF Modules contains up to two REV path Low Noise Amplifiers (LNA for PRI and/or SEC reverse paths).

The Duplexer for an HDM RF Module does not have a Low Noise Amplifier.

Duplexers are not field serviceable.

Digital Processing Module

The Digital Processing Module (DPM) is found only in the HDM RF Modules. The DPM provides the primary processing and logic functions for the HDM RF Module. It also provides the primary power interface for the HDM RF Module, and conversion of the native 28 Vdc voltage to lower voltages as necessary for functionality.

The DPM has a Transmit (Tx) Board and a Receive (Rx) Board:

- Tx Board—provides band specific filtering for the intended Transmit path.
- Rx Board—provides band specific filtering for the intended Receive path.

Cables

Always provided at each RF Module shelf are five cables:

- two High-Speed Data Cables, which in this document are referred to as LVDS (Low-Voltage Differential Signaling) cables
- two RF Cables (TX0/RX0) and (TX1/RX1)
- one Power (PWR) Cable.

The RF Module cables that are pre-installed in the PRU connect to the corresponding connectors on the RF Module. The RF Module cables correlate to the antenna connectors on the bottom of the Remote Unit chassis.

© March 2016 CommScope, Inc.

LEDS on Narrowband HDM RF Modules

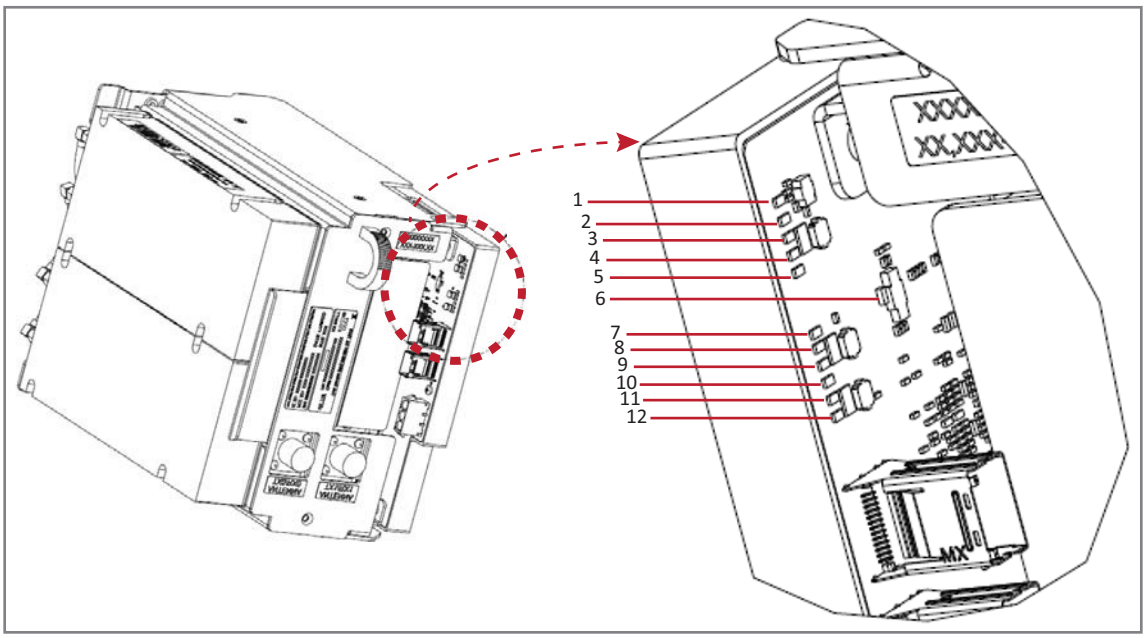

Ref #	LED	LED Color	Description
1	DPM Power	Green	HDM RF Module is powered on.
		Red	Problem with the HDM RF Module power.
2	FPGA Status	Blinking Green	Blinks as heartbeat of the HDM RF Module.
3	LVDS 0 Status	Green	Primary LVDS Dynamic Phase Alignment (DPA) connector is operating as expected.*
		Red	Primary LVDS DPA connector is not operating as expected.
4	LVDS 1 Status	Green	Primary LVDS Dynamic Phase Alignment (DPA) connector is operating as expected.*
		Red	Primary LVDS DPA connector is not operating as expected.
5	DSP/GC Status	—	Not used.
6	FPGA Load Status	Red	FPGA is in startup mode.
		Off	FPGA load is complete.
7	TXA Status	Green	All synthesizers are locked.
		Blinking Green	One or more synthesizer is unlocked.
		Red	Overflow on RX.
8	RXA Status	Green	All synthesizers are locked.
		Blinking Green	One or more synthesizer is unlocked.
		Red	Overflow on RX.
9	TMA A Status	—	Not used.
10	TXB Status	Green	All synthesizers are locked.
		Blinking Green	One or more synthesizer is unlocked.
		Red	Overflow on RX.
11	RXB Status	Green	All synthesizers are locked.
		Blinking Green	One or more synthesizer is unlocked.
		Red	Overflow on RX.
12	TMA A Status	—	Not used.

* LED is only applicable to the Primary connector; it is not tied to the status of the Secondary DPA connector.

© March 2016 CommScope, Inc.

LEDS on Wideband and Fullband HDM RF Modules

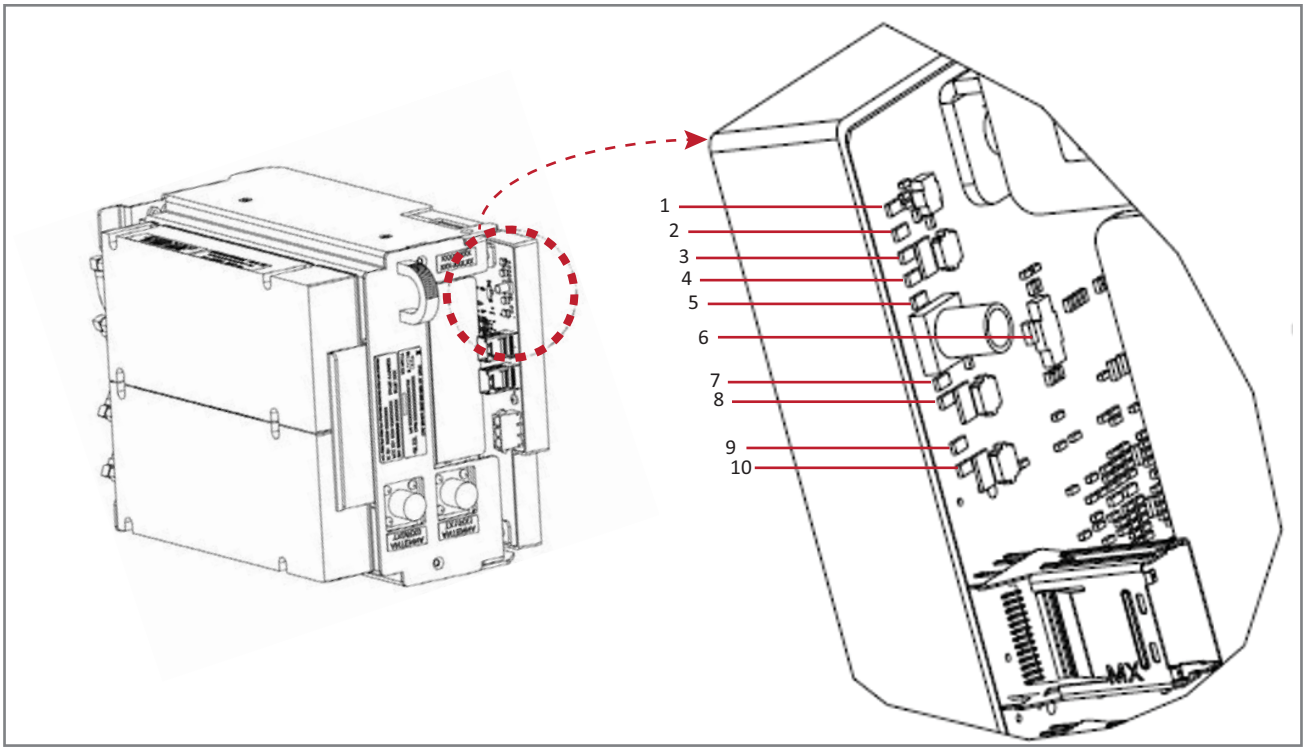

Ref #	LED	LED Color	Description
1	DPM Power	Green	HDM RF Module is powered on.
		Red	Problem with the HDM RF Module power.
2	FPGA Status	—	Not used.
3	LVDS 0 Status	—	Not used.
4	LVDS 1 Status	—	Not used.
5	DSP/GC Status	—	Not used.
6	FPGA Load Status	Red	FPGA is in startup mode.
		Off	FPGA load is complete.
7	TXA Status	Green	All synthesizers are locked.
		Blinking Green	One or more synthesizer is unlocked.
		Red	Overflow on RX.
8	RXA Status	Green	All synthesizers are locked.
		Blinking Green	One or more synthesizer is unlocked.
		Red	Overflow on RX.
9	TXB Status	Green	All synthesizers are locked.
		Blinking Green	One or more synthesizer is unlocked.
		Red	Overflow on RX.
10	RXB Status	Green	All synthesizers are locked.
		Blinking Green	One or more synthesizer is unlocked.
		Red	Overflow on RX.

© March 2016 CommScope, Inc.

Configuring the System with RF

The following sections describe how to correctly pair RF Modules with PRU slots, cables, and Antenna connectors.

RF Group Assignments for PRU RF Module Bays

A PRU comprises from one to four RF Module bays. Figure 7 illustrates the numbering of RF Module bays and DARTs.

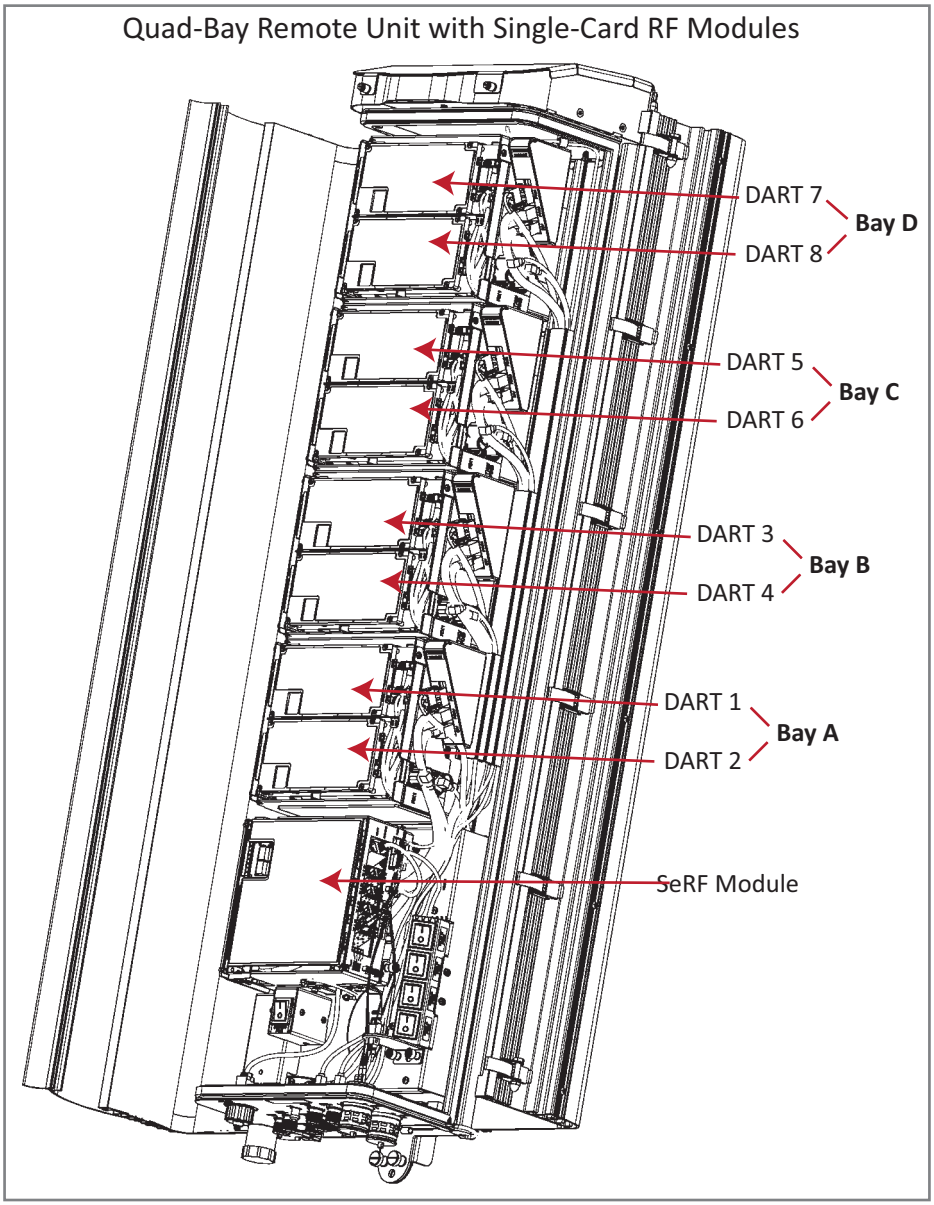

Figure 7. RF Modules Bays in a PRU

© March 2016 CommScope, Inc.

Table 15 lists how the FlexWave Prism EMS references the RF group assignments and corresponding components of each RF Module.

Table 15. *Remote Unit RF Group Assignments (from Top/Down)*

Physical RF Bay	DART Number	LNA Number		LPA Number for Single LPA	LPA Number for Dual LPAs	Power Detector Number for Single PD	Power Detector Number for Dual PDs
		Primary	Diversity				
D	8		8	7	8	7	8
	7	7			7		7
C	6		6	5	6	5	6
	5	5			5		5
B	4		4	3	4	3	4
	3	3			3		3
A	2		2	1	2	1	2
	1	1			1		1
NOTE: For software releases prior to 7.3, the LPAs were labeled as 1, 2, 3, and 4.							

NOTE: **For Classic dual position 40W RF Modules only: in a dual LPA system, the Configure Remote Forward Gain page shows two values for the LPA status, one for each LPA. Changing the LPA Mode or resetting the LPA applies to both LPAs at the same time.**

CAUTION! **Should your system experience an LPA problem, refer to Table 15 to ensure that you apply new settings or troubleshoot the correct RF Module.**

© March 2016 CommScope, Inc.

The Legacy Dual-Bay 40W RF Module occupies two bays in a PRU. Figure 8 shows the main components in a PRU enclosure, with a Legacy 40W RF Module occupying Bays A and B. The controlling DART will always be in the upper bay (B or D), and the second LPA is always in the lower bay (A or C).

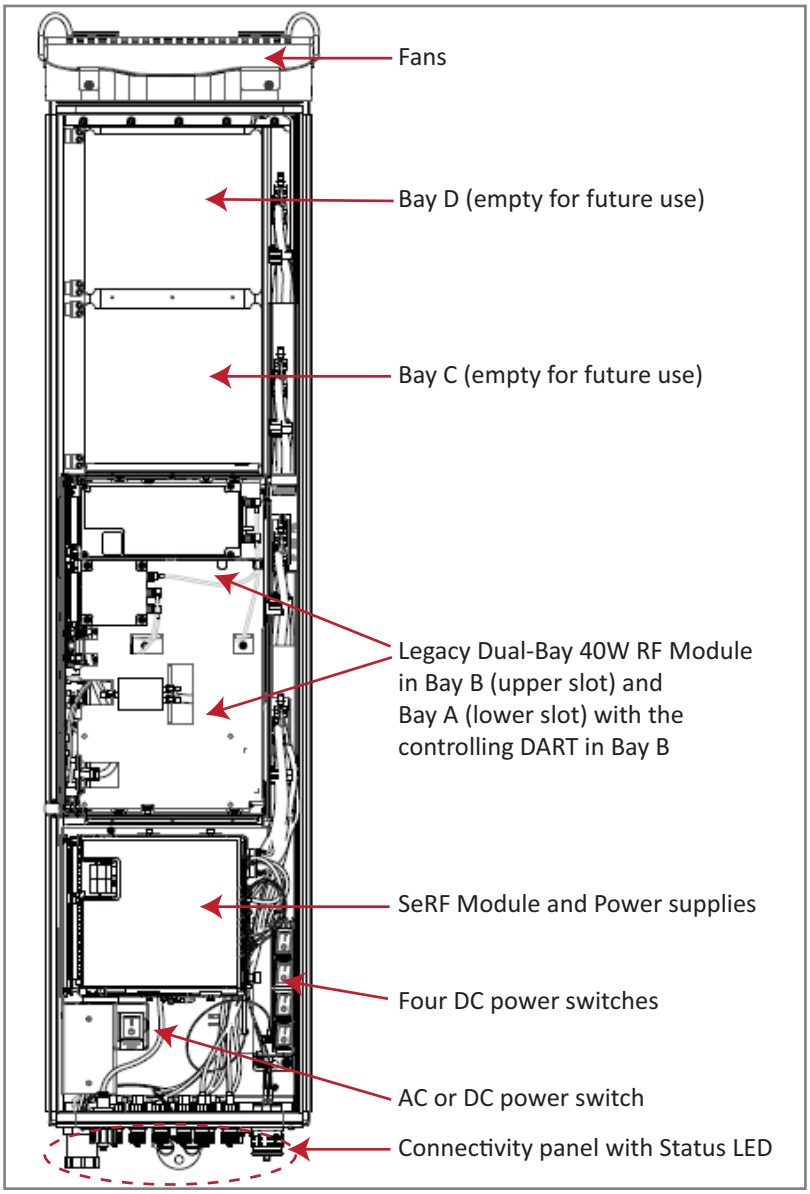

Figure 8. Legacy Dual-Bay 40W RF Module in a Quad-Bay PRU

NOTE: **If a Legacy Dual-Bay 40W RF Module AWS 2100 and a Legacy Dual-Bay 40W RF Module PCS 1900 are both installed in a Quad-Bay PRU, it is recommended that the PCS 1900 be installed in upper-most bay, and the AWS 2100 be installed in the lower-most bay.**

NOTE: **To accommodate two-bay modules, you need to remove a module bay shelf as described in "Dual-Bay Modules Only—Remove the Module Bay Shelf" on page 85.**

© March 2016 CommScope, Inc.

Understanding RF Cable Rules

- When installing a Diversity, MIMO or Dual-Band RF Module, both RF cables labeled MOD N TX0/RX0 and MOD N TX1/RX1 shall be connected to the N-Style connections of the RF Module. Note that older labeling schemes used "PRI" and "DIV". To match old labeling schemes to current labeling:

Old Label	New Label
PRI	TX0/RX0
DIV	TX1/RX1

- When installing a Non-Diversity or SISO RF Module, or an SMR 800/900 Dual-Band Dual-Bay RF Module:
  - Connect the MOD N TX0/RX0 cable to the single available N-Style RF Connection of the RF Module.
  - Constrain the MOD N TX1/RX1 cable with the existing cables using a tie wrap or similarly accepted fastener so it cannot be pinched or prevent the Remote Unit door from closing. Do not cut or attempt to otherwise remove this RF Cable.
- RF cables are hand-malleable; however, cables must adhere to a minimum bend radius of 1-inch from the outlet of the integrated cable guide to the respective N-Style RF connection on the RF Module.

RF Module Cables and Supported Bay Use for Single-Card, Dual-Card, and HDM RF Modules

The RF cable and connector labels correspond to the RF Module bays in the Remote Unit chassis, where **MOD A** is the bottom bay and **MOD D** is the top bay.

- The cables and connectors have corresponding labels as shown in Table 16 on page 27 for Single-Card, Dual-Card, and HDM RF Modules. For Dual-Bay installations, the RF cables and connectors are labeled as **MOD N TX0/RX0** and **MOD N TX1/RX1**, where **N** refers to the top bay of the double-bay installation. For example:
  - For a Dual-Bay installation in a Quad-Bay chassis in which the RF Module is installed in the Bay D and Bay C combination, the RF cables and connectors are labeled as **MOD D TX0/RX0** and **MOD D TX1/RX1**.
  - For a Dual-Bay installation in a Tri-Bay chassis in which the RF Module is installed in the Bay B and Bay A combination, the RF cables and connectors are labeled as **MOD B TX0/RX0** and **MOD B TX1/RX1**.
- Table 16 on page 27 also shows which RF Module type can be installed in which PRU bay or bay combination.

© March 2016 CommScope, Inc.

Table 16. *Supported Bay Use and RF Antenna Labels for Single-Card, Dual-Card, and HDM RF Modules (From Top of Remote Unit Chassis Down)*

	Supported Bay Configurations for Single-Bay RF Modules	Supported Bay Combinations for Dual-Bay RF Modules			RF Module Cable, RF Module Connector, and Remote Antenna Connector Label	Function
		Supported Bays in Dual-Bay Chassis	Supported Bays in Tri-Bay Chassis	Supported Bays in Quad-Bay Chassis		
Bay D	MOD D	N/A	N/A	MOD D	Mod D TX0/RX0	Transmit RF power and primary/Path 1 receive to/from the antenna for RF Module D
					Mod D TX1/RX1	Transmit RF power and secondary/Path 2 receive to/from the antenna for RF Module D
Bay C	MOD C	N/A	MOD C		Mod C TX0/RX0	Transmit RF power and primary/Path 1 receive to/from the antenna for RF Module C
					Mod C TX1/RX1	Diversity receive/Path 2 for Transmit RF power and secondary/Path 2 receive to/from the antenna for RF Module C
Bay B	MOD B	MOD B	MOD B	MOD B	Mod B TX0/RX0	Transmit RF power and primary/Path 1receive to/from the antenna for RF Module B
					Mod B TX1/RX1	Transmit RF power and secondary/Path 2 receive to/from the antenna for RF Module B
Bay A	MOD A				Mod A TX0/RX0	Transmit RF power and primary/Path 1 receive to/from the antenna for RF Module A
					Mod A TX1/RX1	Transmit RF power and secondary/Path 2 receive to/from the antenna for RF Module A

RF Module Cables and Supported Bay Installations for Legacy Dual-Bay 40W RF Modules

The cables and connectors have corresponding labels as shown in Table 17 on page 28 for Legacy Dual-Bay 40W RF Modules. Table 17 on page 28 also shows which RF Module type can be installed in which PRU bay(s) when a 40W Dual-Bay RF Module is part of the RF Module mix in a PRU chassis. The Single-Bay chassis is not included in Table 17 on page 28.

For Dual-Bay installations, the RF cables and connectors are labeled as **MOD N TX0/RX0** and **MOD N TX1/RX1**, where **N** refers to the top bay of the double-bay installation. For example:

- For a Dual-Bay installation in a Quad-Bay chassis in which the RF Module is installed in the Bay D and Bay C combination, the RF cables and connectors are labeled as **MOD D TX0/RX0** and **MOD D TX1/RX1**.
- For a Dual-Bay installation in a Tri-Bay chassis in which the RF Module is installed in the Bay C and Bay B combination, the RF cables and connectors are labeled as **MOD C TX0/RX0** and **MOD C TX1/RX1**.

© March 2016 CommScope, Inc.

Table 17. *Supported Bay Assignments and RF Antenna Labels for Legacy Dual-Bay 40W RF Modules (From Top of Remote Unit Chassis Down)*

	Supported Bay Combinations for Legacy 40W Dual-Bay RF Modules						RF Module Cable, RF Module Connector, and Remote Antenna Connector Label	Function
	Dual-Bay	Tri-Bay	Tri-Bay	Quad-Bay				
Bay D	N/A	N/A	N/A	MOD D	MOD D	MOD C	Mod D TX0/RX0	Transmit RF power and primary/Path 1 receive to/from the antenna for RF Module D
							Mod D TX1/RX1	Transmit RF power and secondary/Path 2 receive to/from the antenna for RF Module D
Bay C	N/A	MOD C	MOD C		MOD C		Mod C TX0/RX0	Transmit RF power and primary/Path 1 receive to/from the antenna for RF Module C
							Mod C TX1/RX1	Transmit RF power and secondary/Path 2 receive to/from the antenna for RF Module C
Bay B	MOD B	MOD B		MOD B	MOD B	MOD B	Mod B TX0/RX0	Transmit RF power and primary/Path 1receive to/from the antenna for RF Module B
							Mod B TX1/RX1	Transmit RF power and secondary/Path 2 receive to/from the antenna for RF Module B
Bay A			MOD A			MOD A	Mod A TX0/RX0	Transmit RF power and primary/Path 1 receive to/from the antenna for RF Module A
							Mod A TX1/RX1	Transmit RF power and secondary/Path 2 receive to/from the antenna for RF Module A

NOTE: **For Dual Module installations the center module shelf needs to be removed; see "Dual-Bay Modules Only—Remove the Module Bay Shelf" on page 85.**

NOTE: **Install the Legacy Dual-Bay 40W RF Module in the lower-most bay in the chassis. If, however, if two Legacy Dual-Bay 40W RF Modules are present, install the 2100 Module in the lower-most Bay and the 1900 Module in the upper-most Bay.**

© March 2016 CommScope, Inc.

Install the Prism Remote Unit

This section tells you how to install a Prism Remote Unit (PRU). If the PRU is already installed and you need to add one or more RF Modules, go to "Install the RF Module(s)" on page 80.

Planning for a Prism Remote Unit Installation

Before you unpack the PRU, you should first plan for where it will be mounted and collect the tools and supplies that are required to mount the PRU and then connect it to a Prism system.

NOTE: **Installation of the Prism Remote Unit may proceed separately from the installation of the corresponding Host Unit.**

Safety Precautions

CAUTION! **This is restricted access equipment and only qualified service personnel should open, service, or operate this equipment using appropriate tools.**

CAUTION! **Wet conditions increase the potential for receiving an electrical shock when installing or using electrically-powered equipment. To prevent electrical shock, never install or use electrical equipment in a wet location or during a lightning storm.**

CAUTION! **Contact with overhead cables, especially electric power cables, could cause serious personal injury or death. Before beginning the installation, check the location of all overhead wires and cables and take precautions to avoid accidental contact.**

CAUTION! **Exterior surfaces of the Prism Remote Unit may be hot. Use caution during servicing.**

CAUTION! **This equipment uses a Class 1 Laser according to FDA/CDRH rules. Laser radiation can seriously damage the retina of the eye. Do not look into the ends of any optical fiber. Do not look directly into the optical transceiver of any digital unit or exposure to laser radiation may result. An optical power meter should be used to verify active fibers. A protective cap or hood MUST be immediately placed over any radiating transceiver or optical fiber connector to avoid the potential of dangerous amounts of radiation exposure. This practice also prevents dirt particles from entering the adapter or connector.**

CAUTION! **This system is an RF Transmitter and continuously emits RF energy. Maintain 3 foot (91.4 cm) minimum clearance from the antenna while the system is operating. Wherever possible, shut down the RAN before servicing the antenna.**

CAUTION! **Always allow sufficient fiber length to permit routing of patch cords and pigtails without severe bends. Fiber optic patch cords or pigtails may be permanently damaged if bent or curved to a radius of less than 2 inches (5.1 cm).**

CAUTION! **Always use an Electro-Static Discharge (ESD) wrist strap whenever you work with the Prism Remote Unit or its components. Make sure that it maintains maximum contact with bare skin. ESD grounding straps are available with banana plugs, metal spring clips, or alligator clips. To ensure adequate grounding, connect the ESD wrist strap to any bare metal surface of the Prism Remote Unit chassis (which may require that you scrape off some of its protective coating), or to the Dual-Ground Connector at the bottom of the unit. For information on the Dual-Ground Connector, see "Ports and Connectors" on page 7.**

CAUTION! **Service personnel must confirm that the perimeter gasket and door-to-door gaskets are in place when closing the Prism doors after servicing.**

© March 2016 CommScope, Inc.

Mounting Plans

The PRU has a low profile design that requires minimal real estate for installation. The basic dimensions and weights of the PRU are listed in Table 19 on page 31 and Table 18 on page 31.

The PRU should be mounted on a utility pole, mast, or on a flat surface. A Mounting Bracket ships with each Remote. Installation consists of securing the bracket to the mounting surface (wood, concrete, or steel) and then hanging the unit from the bracket. the PRU should only be mounted in a restricted access location.

Before mounting the PRU, make sure that the following requirements are met.

- The PRU must
  - be installed only in a restricted-access location
  - must be located as specified in the system design plan (not documented here). If a system design plan has not been prepared, consult with the Technical Support for Wireless Products team for assistance (see "DCCS Global Technical Support" on page 119).
  - must have ready access to the specified AC or DC power source.
- If you mount the PRU in a horizontal position, you must mount it at a slight angle, with the top of the PRU chassis angled higher than the bottom, which creates a slope that allows water or snow to run off the PRU chassis. If it is mounted indoors, no slope required.
- If you mount the PRU in an upside-down horizontal position (i.e., a ceiling mount), attach safety leashes that can support the weight of a fully populated chassis (see Table 18 on page 31).
- The site chosen must
  - conform to all local codes; required permits must be obtained prior to mounting a PRU
  - comply with the unit environmental specifications
  - be open to free air space on the bottom (cable entry end), the top, the front, and both sides
  - allow adequate clearance at the bottom of the PRU to provide access for attaching cables and for viewing the LED indicator
  - provide 18 inches (45.7 cm) of clearance on the front and both sides of the PRU to allow doors to be opened for service and to allow free air circulation
  - be able to bear the size and weight of the PRU enclosure, see Table 19 on page 31 and Table 18 on page 31

© March 2016 CommScope, Inc.

Table 18. *Prism Remote Unit Weights* (1)

PRU Model	Unpopulated	Populated
Single-Bay		
Pounds	65	83
Kilograms	29	38
Dual-Bay		
Pounds	81	117
Kilograms	37	53
Tri-Bay		
Pounds	97	151
Kilograms	44	68
Quad-Bay		
Pounds	116	188
Kilograms	53	85

(1) "Unpopulated" weight includes the SeRF Module and the Solar shields, which are always present. "Populated" weight is the weight of the chassis that has the SeRF Module and RF Modules installed.

Table 19. *Prism Remote Unit Enclosure Dimensions* (1)

PRU Model	Height Depth	Width (2)	See...
Single-Bay			Figure 9 on page 32
Inches	25.2	12.211.2	
Centimeters	64	30.9928.45	
Dual-Bay			Figure 10 on page 33
Inches	33.2	12.211.2	
Centimeters	84.3	30.9928.45	
Tri-Bay			Figure 11 on page 34
Inches	41.2	12.2 11.2	
Centimeters	104.6	30.9928.45	
Quad-Bay			Figure 12 on page 35
Inches	52.4	12.2 11.2	
Centimeters	133.10	30.99 28.45	

(1) To have adequate clearance to open the PRU chassis door, allow a minimum of 18 inches at the left, right and front of each PRU.
(2) Dimension for width includes the mounting brackets.

Figure 9 on page 32 through Figure 12 on page 35 provide the spacing dimensions for bands and bracket mounting bolts.

© March 2016 CommScope, Inc.

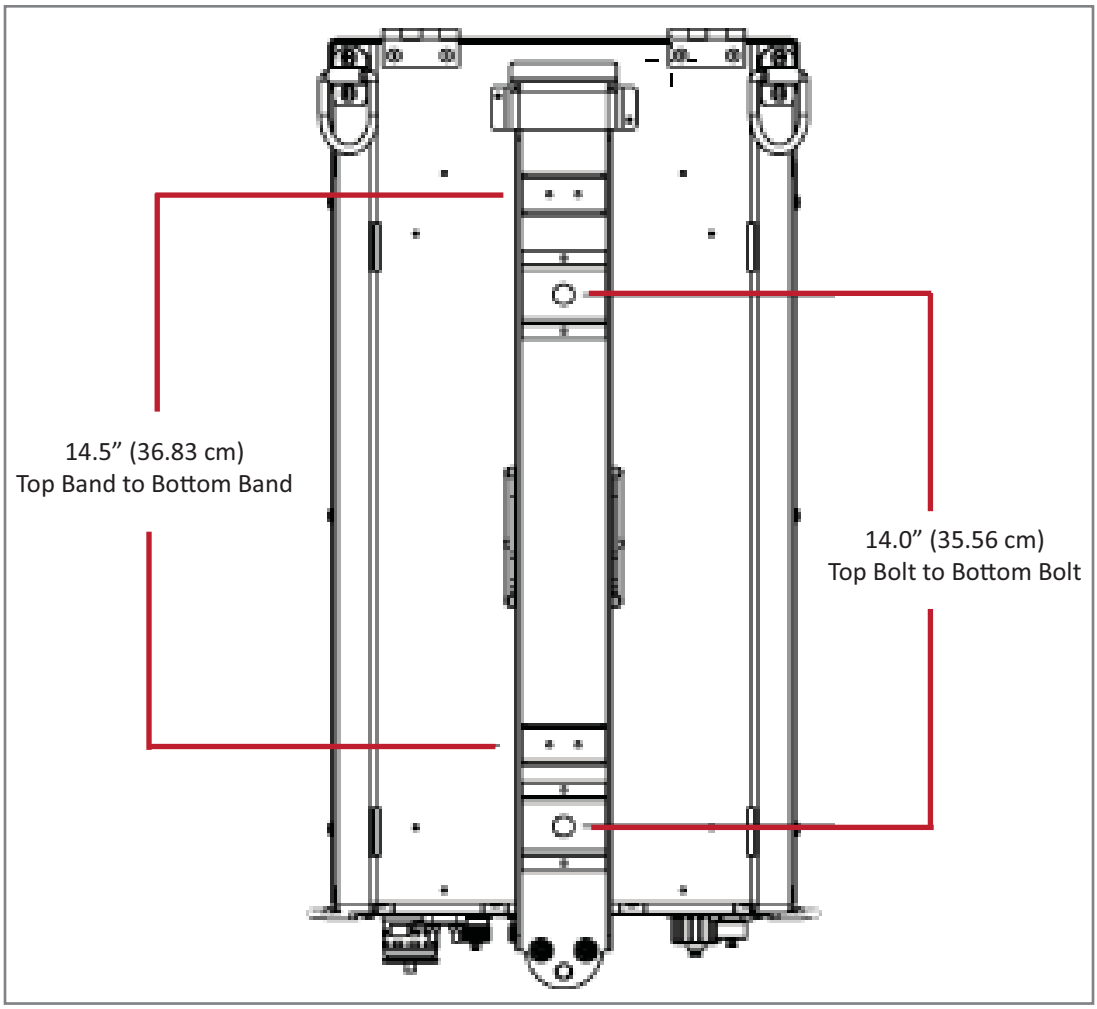

Figure 9. Mounting Dimensions for Single-Bay PRUs

© March 2016 CommScope, Inc.

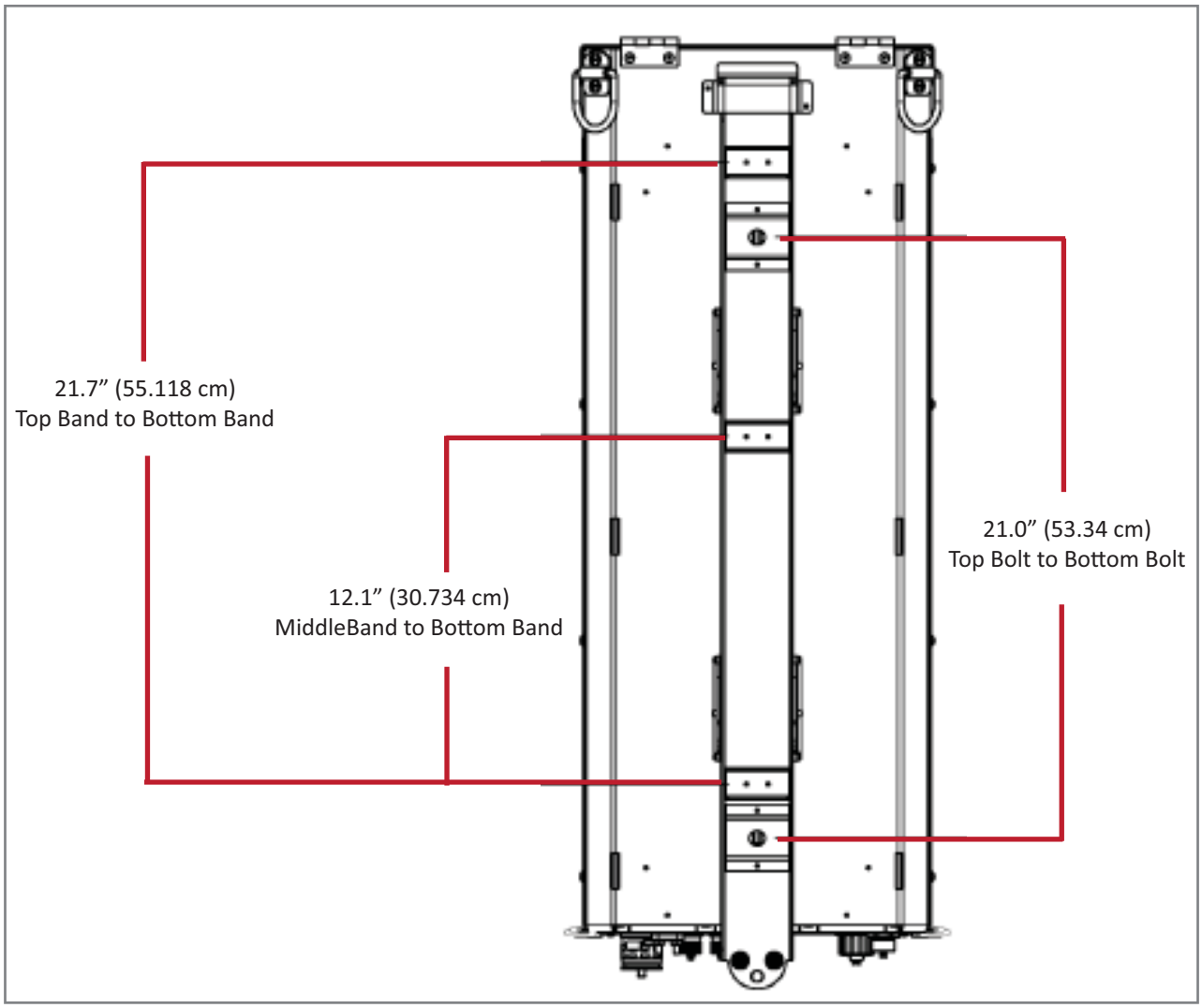

Figure 10. Mounting Dimensions for Dual-Bay PRUs

© March 2016 CommScope, Inc.

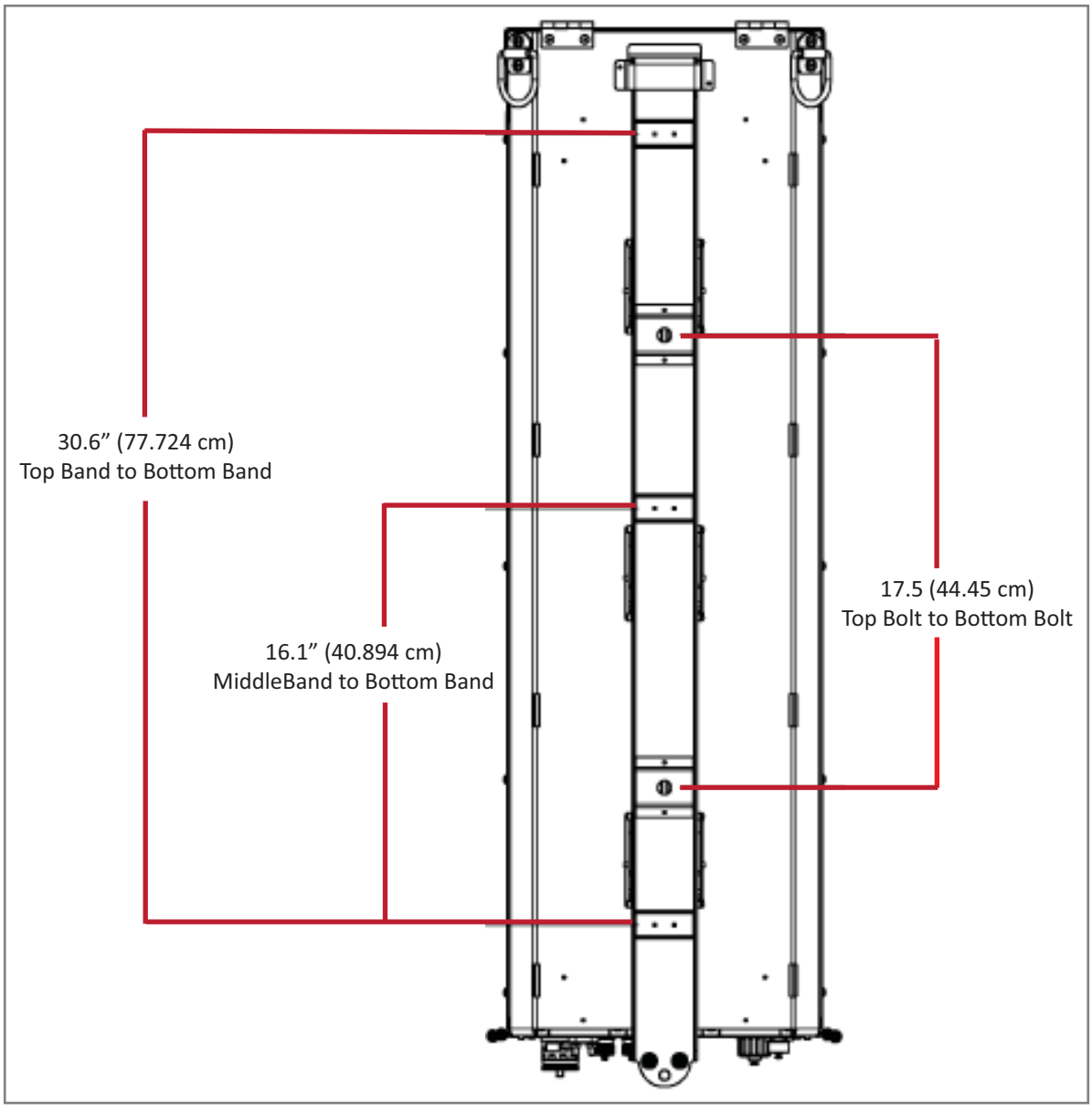

Figure 11. Mounting Dimensions for Tri-Bay PRUs

© March 2016 CommScope, Inc.

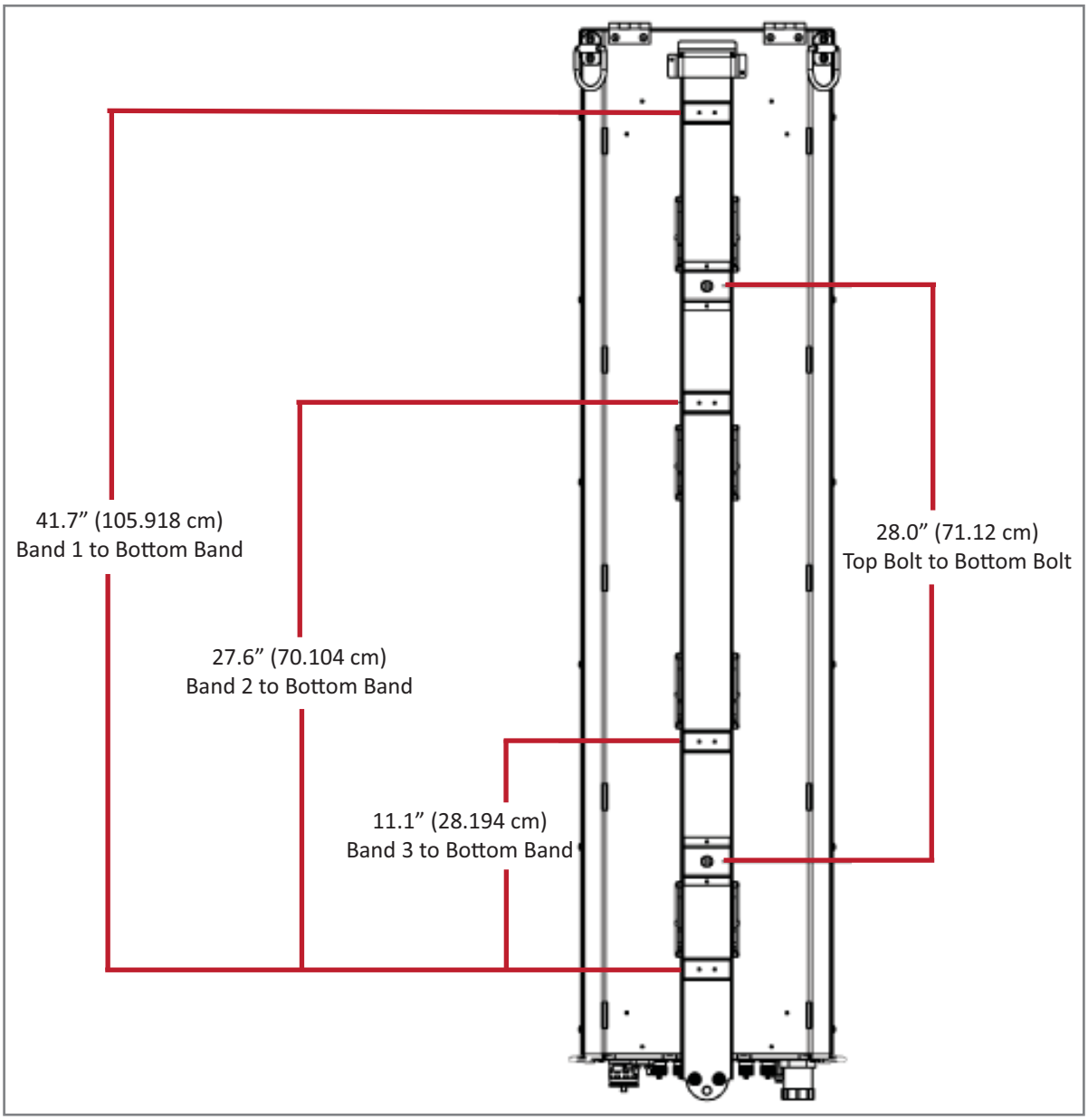

Figure 12. Mounting Dimensions for Quad-Bay PRUs

© March 2016 CommScope, Inc.

Installation Tools and Supplies

The tools and any additional materials required for install and mount the PRU are dependent on the mounting location.

Tools Required for All Mounting Methods

The Mounting Bracket ships with the PRU—it secures the PRU to its packing crate. All installations require at least one each of the following, which must be provided by the installer:

- tape measure
- pencil or other marking device
- 3/8-inch Flat-Blade screwdriver
- lifting equipment for PRU.

Additional Tools and Supplies Required for Steel-Pole Mounting

When mounting the PRU to a steel pole, in addition to the supplies listed in "Tools Required for All Mounting Methods" on page 36 the following supplies are needed:

- one hammer, ≥16-ounces
- one Strap Tensioning/Clamping Tool (Uline Model No. H-1273, or equivalent)
- Table 20 shows the number of stainless-steel straps and stainless-steel buckles required for each PRU type, in which you must have the same number of buckles as straps.
  - Use 1/2-inch to 3/4-inch 201, 301, 304 or 316 Stainless-Steel Strapping with a minimum tensile strength of 1500 lbs (Uline Model No. S-11329, or equivalent).
  - Use Stainless-Steel Buckles designed specifically for the above mentioned strapping (Uline Model No. S-11331, or equivalent).

Table 20. *Required Stainless-Steel Bands for Steel-Pole Mounting*

CommScope Catalog Number	Number of Bands Required for Installation
FP4-XXXXX0021XXRU - Quad-Bay Remote	4
FP3-XXXXX0021XXRU - Tri-Bay Remote	3
FP2-XXXXX0021XXRU - Dual-Bay Remote	
FP1-XXXXX0021XXRU - Single-Bay Remote	2

© March 2016 CommScope, Inc.

Additional Tools and Supplies Required for Wood-Pole Mounting

When mounting the PRU to a wood pole, in addition to the supplies listed in "Tools Required for All Mounting Methods" on page 36, the following supplies are needed:

- one electric drill, 1/2-inch or larger
- one 1/2-inch drill bit
- two 1/2-inch square-head through-bolt or equivalent that is long enough to extend through the utility pole
- two 1/2-inch square nut or equivalent
- two 1/2-inch square washer
- one or more appropriately-sized wrenches for through-bolts
- one adjustable wrench

Additional Tools and Supplies Required for Flat-Surface Mounting

- one electric drill, 1/2-inch or larger
- one 5/8-inch wrench
- two 1/2-inch flat washers
- two 1/2-inch lock washers
- for masonry wall installations only:
  - two 1/2 x 1 1/2-inch hex bolts for masonry wall installations
  - two 1/2-inch concrete wall anchors for masonry wall installations
  - two 3/4-inch masonry drill bit (for masonry wall installations)
- for wood-framed wall installations only:
  - one 3/4-inch pressure-treated plywood, sized to accommodate the PRU (see Table 19 on page 31)
  - fasteners for securing 3/4-inch plywood to wall
  - one 9/16-inch standard drill bit
  - two 1/2 x 1-inch hex bolts
  - two 1/2-inch Tee Nuts

© March 2016 CommScope, Inc.

Tools and Supplies Required to Connect a PRU

The installation hardware provided with a PRU is listed below.

- One 15-foot (4.6m) AC Power Cable, that is included with the PRU
- One of the following, which is purchased separately from the PRU:
  - ProAx cable assembly for legacy PRUs using a ProAx Connector
  - HMFOC Cable Assembly for HMFOC Connector
  - Fiber Pass-Through Cable Assembly (provided by installer)

CAUTION! The hardware used to package the PRU for shipment is not intended for installations of a PRU and should be kept with the Prism Remote Unit packaging. Do not use the shipping hardware when installing a PRU.

Additional hardware or tools required to connect a PRU to a Prism system is listed below.

- Electro-Static Discharge (ESD) wrist strap
- Socket Wrench and 3/8-inch Deep Socket
- Wire cutters
- Wire stripper
- 9/64-inch Allen™ wrench (dual-slot RF Module installations only)
- 42MM wrench capable of 44 in-lb torque (the recommended N-Connector torque is 8 in-lb)
- Phillips screw driver capable of 18 in-lb torque
- N-Type male connectors
- Tool kit for attaching N-Type connectors to coaxial cable
- Fiber cleaning kit
- #6 AWG (4 mm) copper wire and splice
- Tools, Junction box, conduit, fasteners, connectors, and wire to install an exterior AC circuit
- RJ-45 connector (if making a permanent external network cable connection)
- For DC-powered PRUs, an 8 AWG or 6 AWG, 3- or 4-conductor power cable rated for outdoor use, with the following requirements.
  - The wire colors must be green, red, and black.
  - The cable must be between .71-inch to .98-inch in diameter.
  - If a 4-conductor power cable is used, the extra conductor can be snipped off before installation.
  - If using 6 AWG wire, the installer must provide and use #10 stud size, 6 AWG ring terminals.

© March 2016 CommScope, Inc.

Unpack and Inspect the Prism Remote Unit and Components

1. Inspect the exterior of the shipping container(s) for evidence of rough handling that may have damaged the components in the container.
2. Check the contents for damage and verify with the packing slip.

   If damage is found or parts are missing, file a claim with the commercial carrier and notify CommScope Customer Service (see "DCCS Global Technical Support" on page 119). Save the damaged cartons for inspection by the carrier.
3. Unpack the PRU.
   - **a** Remove the power cable and any other ship-a-long items from either side of the PRU.
   - **b** Connect a hoist to the two D rings at the top of the PRU.

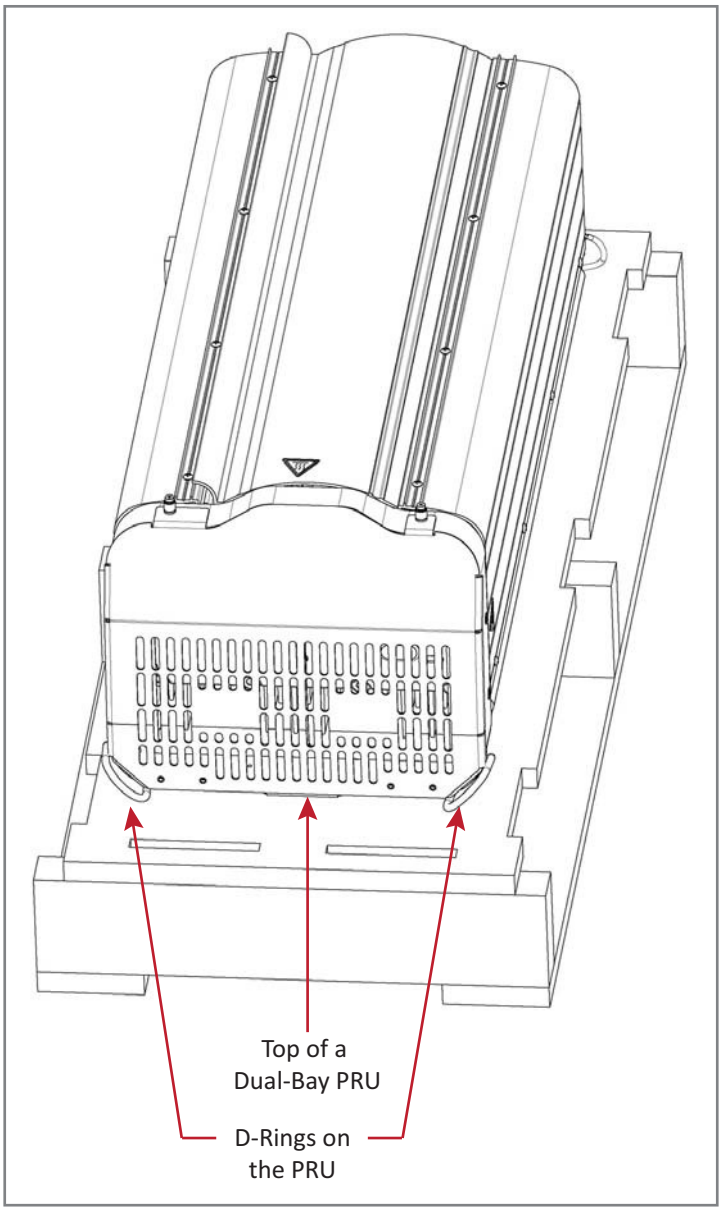

© March 2016 CommScope, Inc.

c Loosen the two captive screws at the bottom of the PRU.

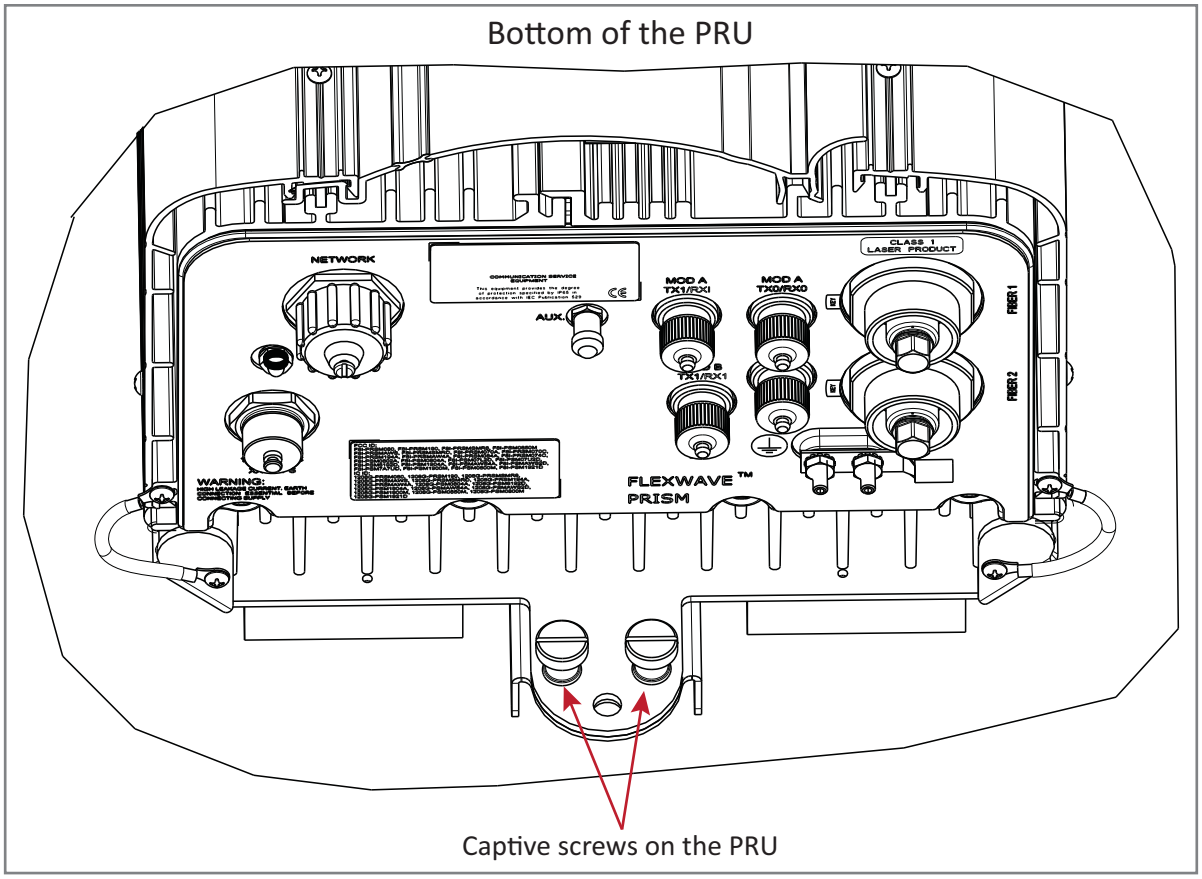

© March 2016 CommScope, Inc.

d Hoist the PRU to an upright position and tap the crate downwards to separate the PRU from the Mounting Bracket.

e Remove the Mounting Bracket from the crate:

- **i** Unscrew two bolts and remove the Mounting Bracket from the crate.
- **ii** Save the Mounting Bracket for field installation.
- **iii** Save the two bolts and empty shipping crate for use should the equipment require shipment.

CAUTION! The crate used to ship the Fullband Remote Unit and the two bolts used to fasten the Mounting Bracket to the shipping crate are not intended for use for when mounting the PRU in the field.

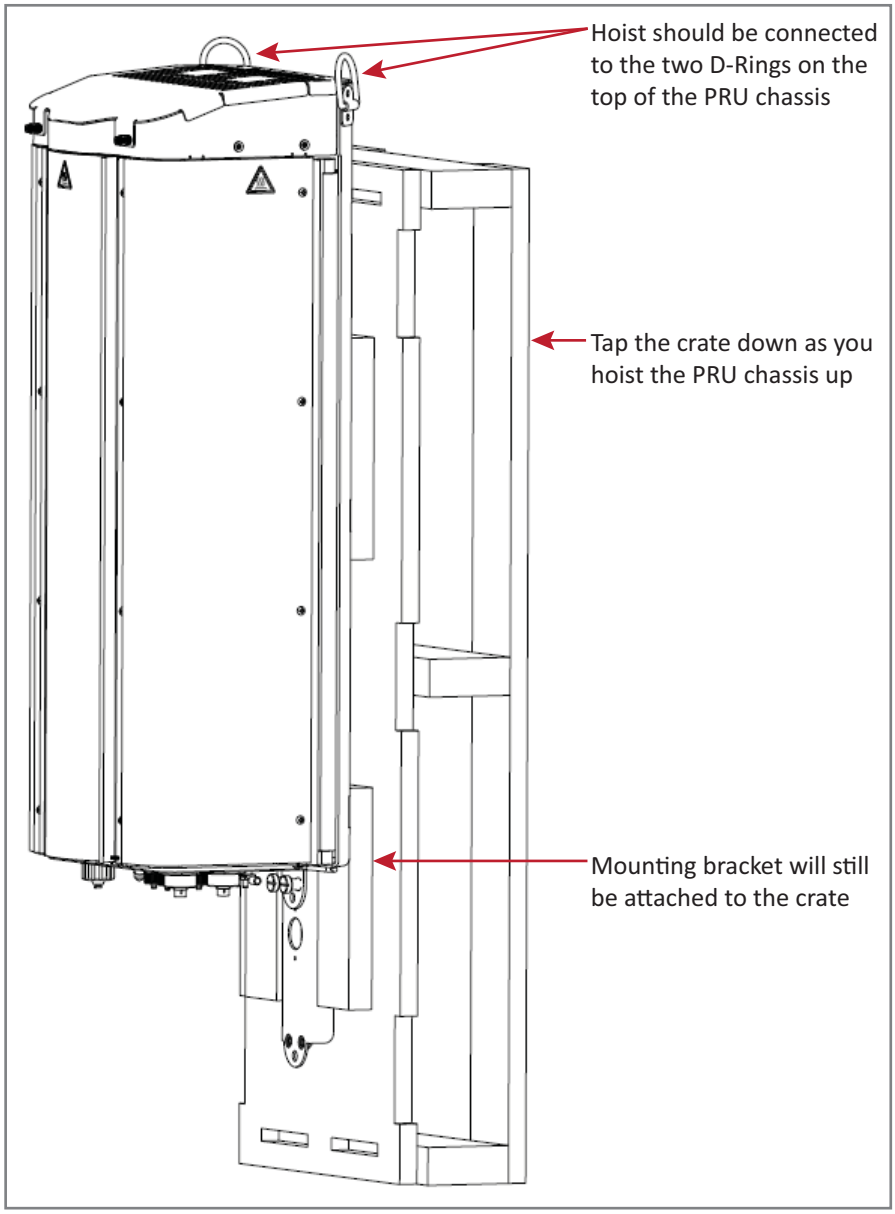

© March 2016 CommScope, Inc.

Mount the Prism Remote Unit

The PRU may be attached to a utility pole, a mast, or on a solid flat surface. Installation consists of securing the bracket to the mounting surface and then hanging the PRU from the bracket. The bracket may be attached to a variety of surfaces such as wood, concrete, or steel.

This guide provides the information you need to install and use the FlexWave Prism Remote Mounting Kit.

To ensure a safe installation, follow the steps in this document in the following order:

1. Gather required tools and supplies as described in "Installation Tools and Supplies" on page 36.
2. Follow the guidelines in "Mounting Plans" on page 30 to decide the best place to install and mount the PRU.
3. Familiarize yourself with the "Mounting Cautions" on page 42.

Mounting Cautions

Observe the following cautions when installing the Mounting Bracket and when hanging a PRU on the bracket.

CAUTION! Use appropriate lifting equipment when unpacking, moving or installing the Prism Remote Unit. Do not stand under the Prism Remote Unit as it is being hoisted into position for installation. A failure of the lifting equipment could result in serious personal injury.

CAUTION! The pole must be structurally sound and able to support the weight of the unit being installed as listed in Table 19 on page 31.

CAUTION! The hardware used to package the PRU for shipment is not intended for Prism Remote Unit installations and should be kept with the Prism Remote Unit packaging. Do not use the shipping hardware when mounting a Prism Remote Unit.

Mounting Methods

Four installation methods are provided, proceed to the correct procedure for your installation environment:

- "Steel Pole Installation Using Steel Banding" on page 43
- "Pole Mount Installation Using Bolts" on page 46
- "Wood-Framed Wall Mounting Procedure" on page 47
- "Masonry Wall Mounting" on page 49

© March 2016 CommScope, Inc.

Steel Pole Installation Using Steel Banding

CAUTION! Always wear safety goggles when working with metal banding and when using tensioning tools.

CAUTION! This section describes how to secure a PRU to a steel pole using steel bands. In high earthquake risk areas, CommScope advises in addition to banding, bolts should be used redundantly to ensure mechanical mounting capable of surviving severe seismic activity. Typical areas where this attachment method are suggested are Earthquake Risk Zone 4, per Bellcore GR-63-CORE, section 4.4.1.1. If you have application specific questions, consult the Wireless Technical Assistance Center (TAC) for technical assistance (see "DCCS Global Technical Support" on page 119). For information on bolting, see "Pole Mount Installation Using Bolts" on page 46.

Stainless-steel bands are used to secure the Mounting Bracket to a metal pole or mast that cannot be pierced with a screw or bolt. The number of bands to be used is dependent on the configuration of the PRU as described in Table 20 on page 36.

1. Refer to "Mounting Cautions" on page 42 before beginning this process.
2. Locate the Mounting Bracket provided with the PRU Mounting Kit and obtain the tools and supplies listed in "Tools Required for All Mounting Methods" on page 36 and "Additional Tools and Supplies Required for Steel-Pole Mounting" on page 36.
3. Slide a buckle on the band and secure by doubling over under buckle, as shown in the illustration to the right, or as instructed in manufacturer's instructions.

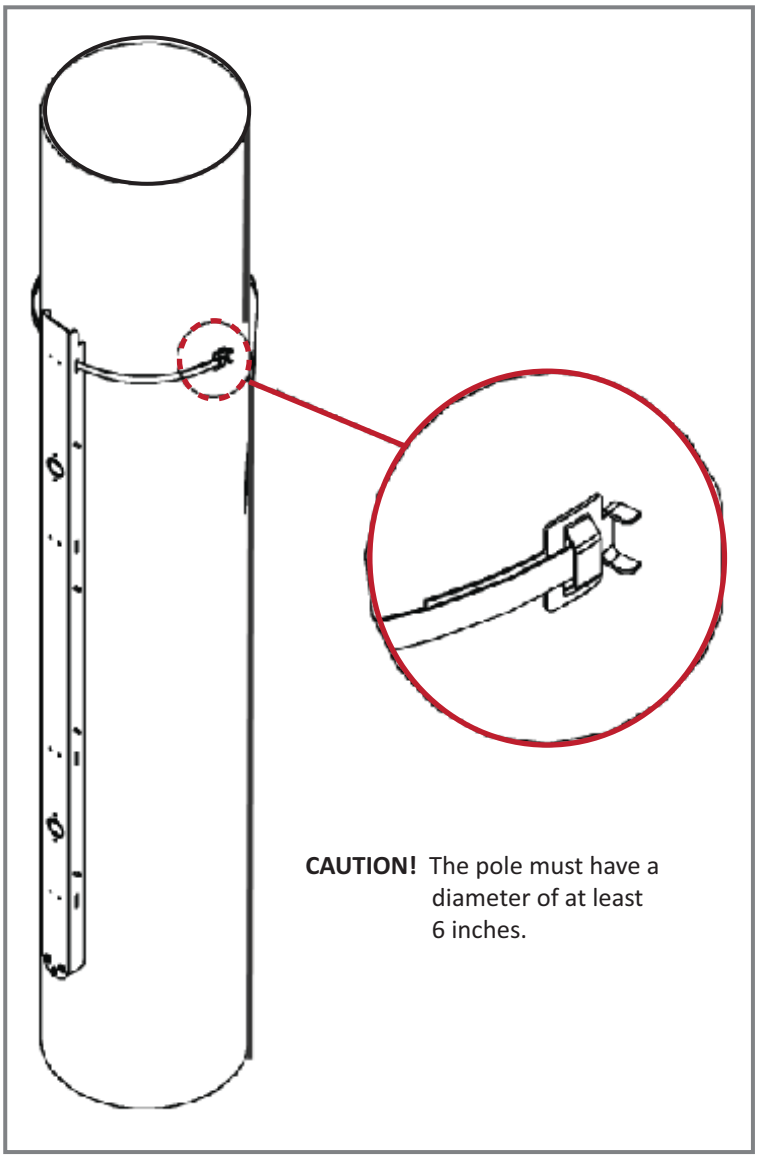

© March 2016 CommScope, Inc.

Bands should pass through each slot of the Mounting Bracket, from top to bottom, ensuring the band passes over the top of the pins, as shown below, and again through the buckle.

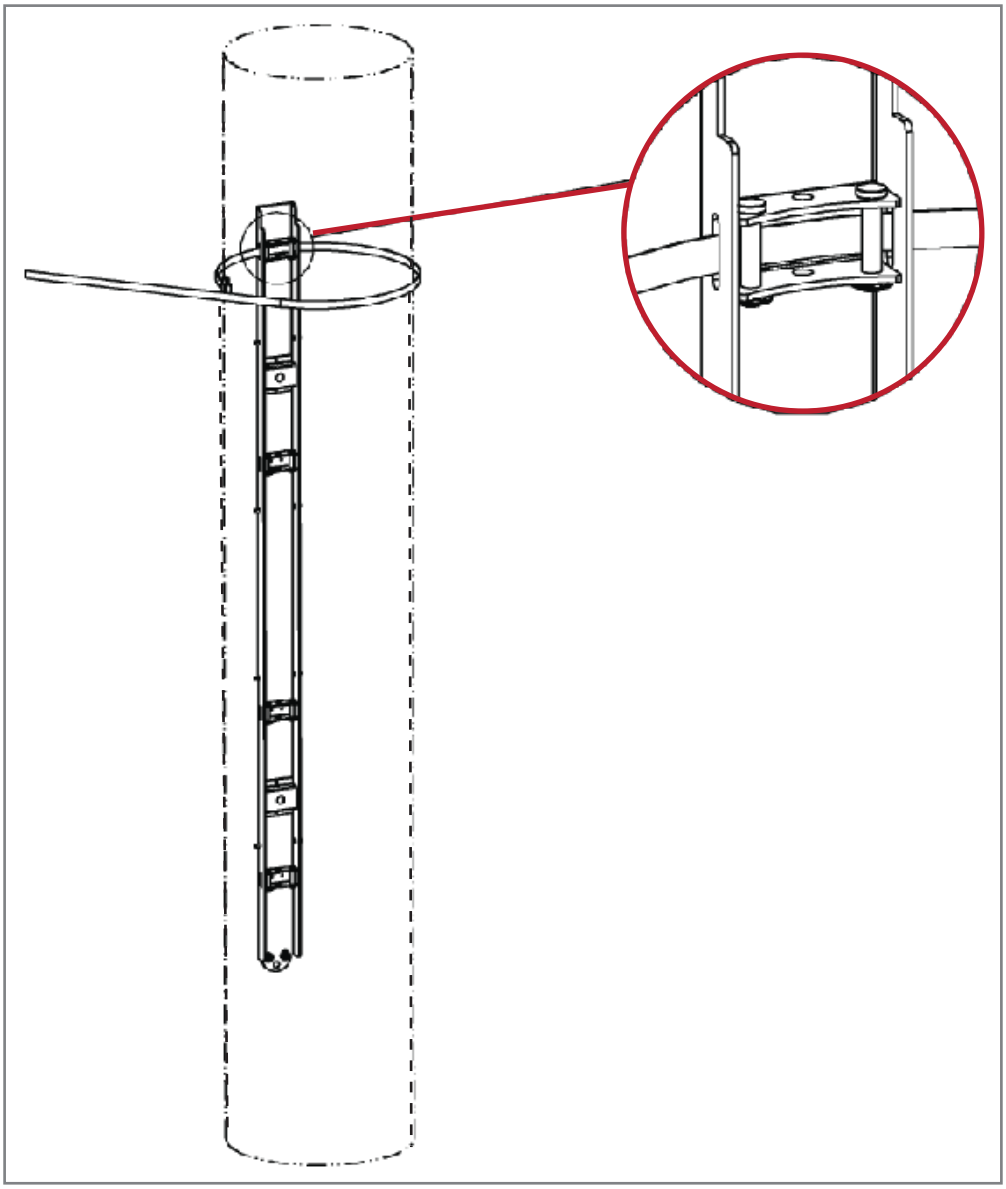

4 Wrap the band around pole once more, passing through the slots in the Mounting Bracket and over pins, and again through buckle. Double banding is critical to generate maximum radial compression of banding to pole and Mounting Bracket.

5 Follow specific manufacturer's instructions for tensioning bands to recommended levels.

6 Roll tool over, bending band over itself at exit from the buckle, as shown above, or as instructed in the manufacturer's instructions to temporarily secure tensioned band.

7 Cut band using tensioning tool as instructed in the manufacturer's instructions.

© March 2016 CommScope, Inc.

8 Clinch band stub in place by hammering down buckle ears, as shown below.

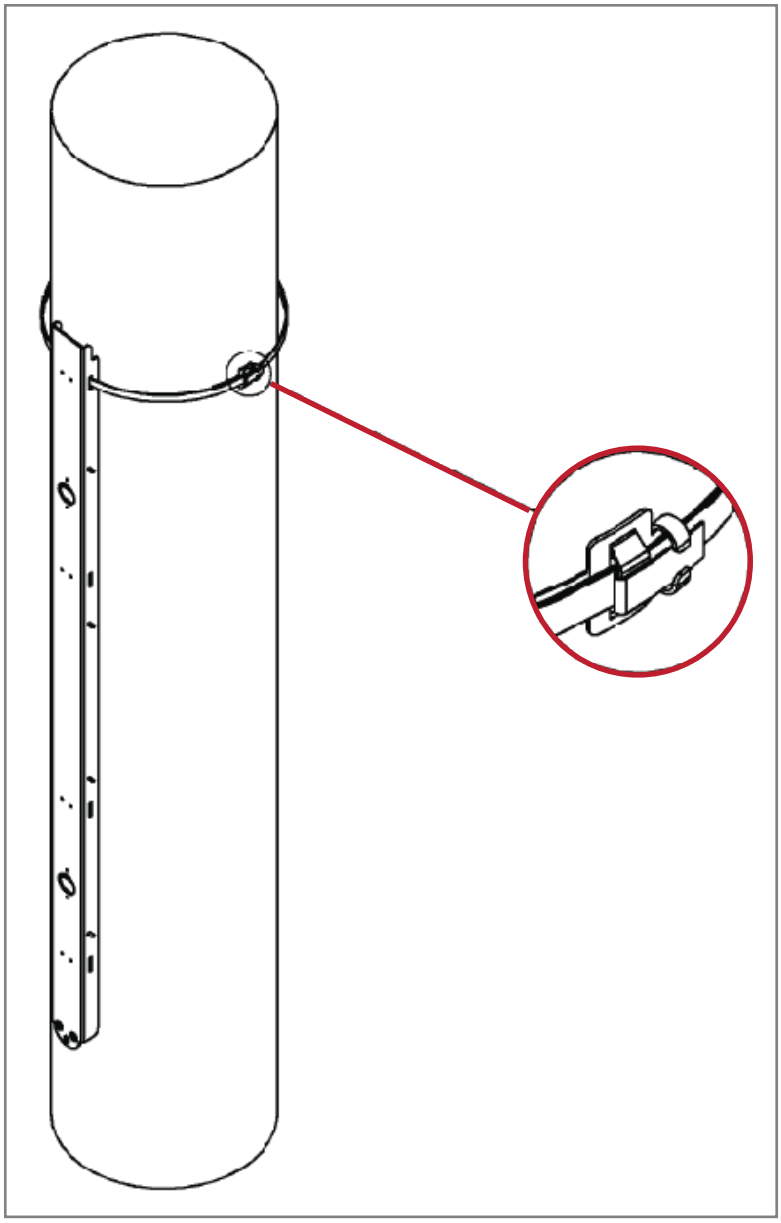

9 Repeat Step 3 on page 43 through Step 8 for each remaining banding slot of the Mounting Bracket.

10 Hang the PRU from the Mounting Bracket as shown in "Installing a PRU on the Mounting Bracket" on page 51.

© March 2016 CommScope, Inc.

Pole Mount Installation Using Bolts

CAUTION! This section describes how to secure a PRU to a wood pole using bolts. In high earthquake risk areas, CommScope advises in addition to bolting, banding should be used redundantly to ensure mechanical mounting capable of surviving severe seismic activity. Typical areas where this attachment method are suggested are Earthquake Risk Zone 4, per Bellcore GR-63-CORE, section 4.4.1.1. If you have application specific questions, consult the Wireless Technical Assistance Center (TAC) for technical assistance (see "DCCS Global Technical Support" on page 119). For information on banding, see "Steel Pole Installation Using Steel Banding" on page 43.

1. Refer to "Mounting Cautions" on page 42 before beginning this process.
2. Locate the Mounting Bracket provided with the PRU Mounting Kit and obtain the tools and supplies listed in "Tools Required for All Mounting Methods" on page 36 and "Additional Tools and Supplies Required for Wood-Pole Mounting" on page 37.
3. Establish where the Mounting Bracket will be mounted on the pole and then determine the location of the bracket mounting bolts on the pole and mark hole locations on pole.
4. Drill a 1/2-inch hole (equal to diameter of through-bolt) into the utility pole at the points marked in Step 3.
5. Secure the bracket to the utility pole using two through-bolts, washers, and nuts as shown in the following illustration, and then tighten the nuts securely.
6. Follow the steps in "Installing a PRU on the Mounting Bracket" on page 51.

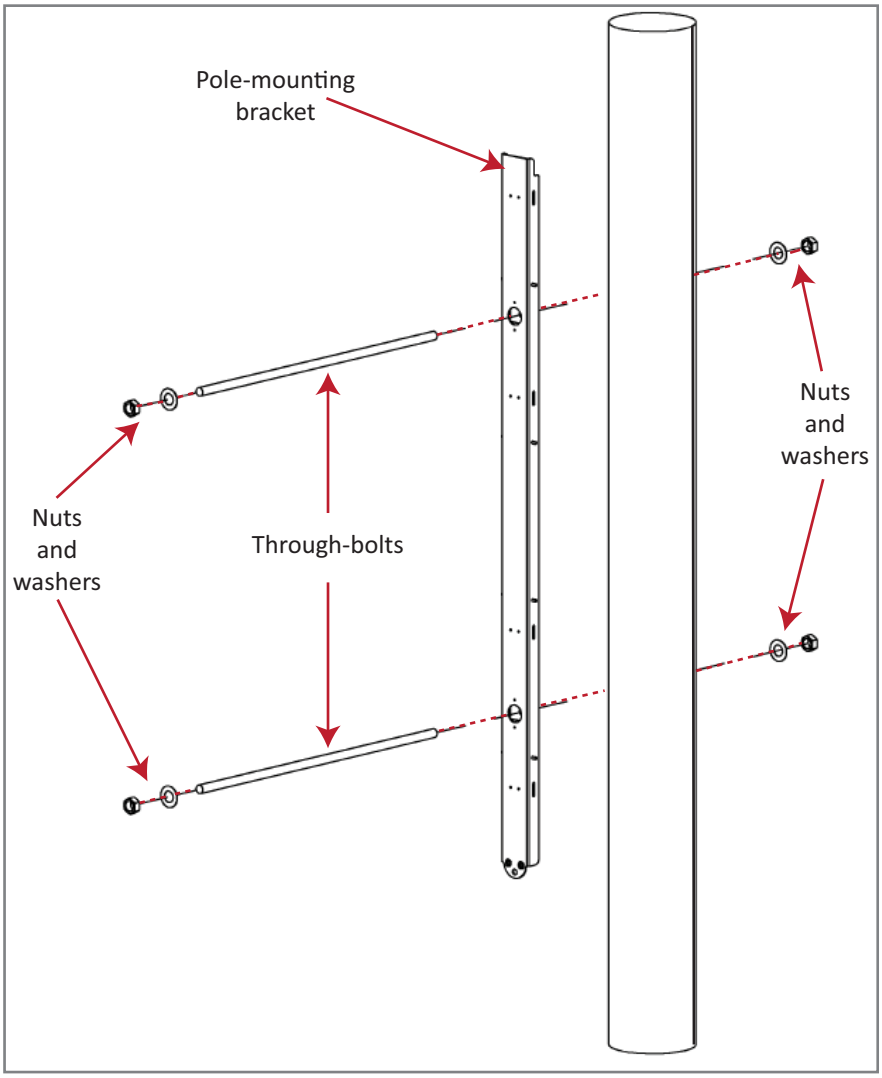

© March 2016 CommScope, Inc.

Wood-Framed Wall Mounting Procedure

1 Refer to "Mounting Cautions" on page 42 before beginning this process.

2 Locate the Mounting Bracket provided with the PRU Mounting Kit.

3 Obtain the tools and supplies listed in "Tools Required for All Mounting Methods" on page 36 and "Additional Tools and Supplies Required for Flat-Surface Mounting" on page 37.

4 Obtain plywood with a minimum thickness of 0.75-inches (19.0 cm) to be used as a backer board.

CAUTION! If the PRU is installed in an area in which there may be moisture, use pressure-treated plywood.

5 Cut the pressure-treated plywood to the correct size to accommodate the PRU being installed (see dimensions in Table 19 on page 31).

6 To avoid a hazardous condition, firmly secure the backer board to the interior framing of the wall.

7 Hold the Mounting Bracket up to the wall and mark the location of the Mounting Bracket's two mounting holes on the plywood backer:

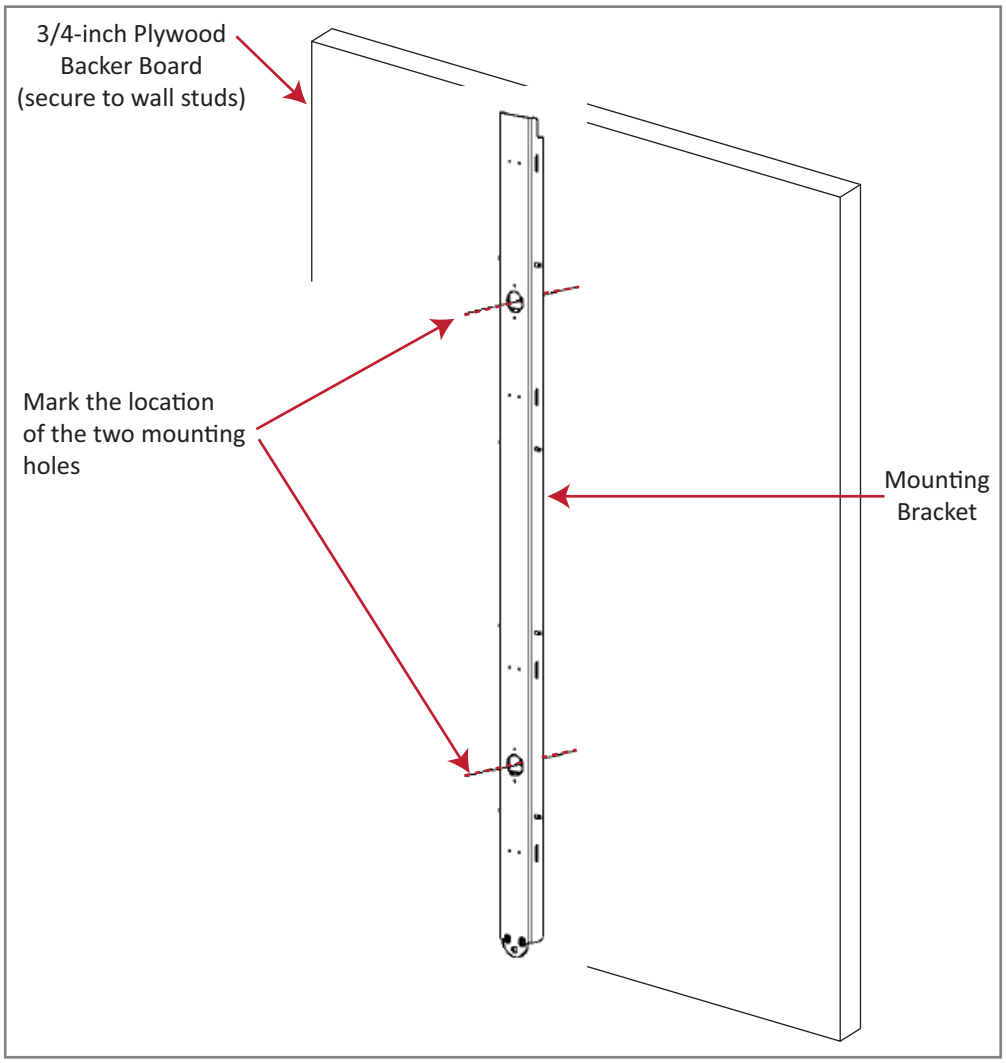

© March 2016 CommScope, Inc.

8 Drill 9/16-inch holes in the plywood backer at the hole positions marked in Step 7.

9 Refer to the following figure and do the following:

a From the side of the backer that will face the wall, drive a 1/2-inch Tee Nut into each drilled hole.

b Mount the plywood backer on the wall and firmly secure it to the wall's interior studs.

c Locate the two 1/2 x 1-inch hex bolts and place a 1/2-inch lock washer and 1/2–inch flat washer on each bolt and then secure the Mounting Bracket to the plywood backer using the assembled bolts and washers.

CAUTION! If plywood backer board or supporting wall is not smooth or does not provide a flat mounting plane for the PRU, add 1/2-inch flat washers between the Mounting Bracket and the mounting surface as required to prevent the PRU from twisting or distorting when secured to the mounting surface.

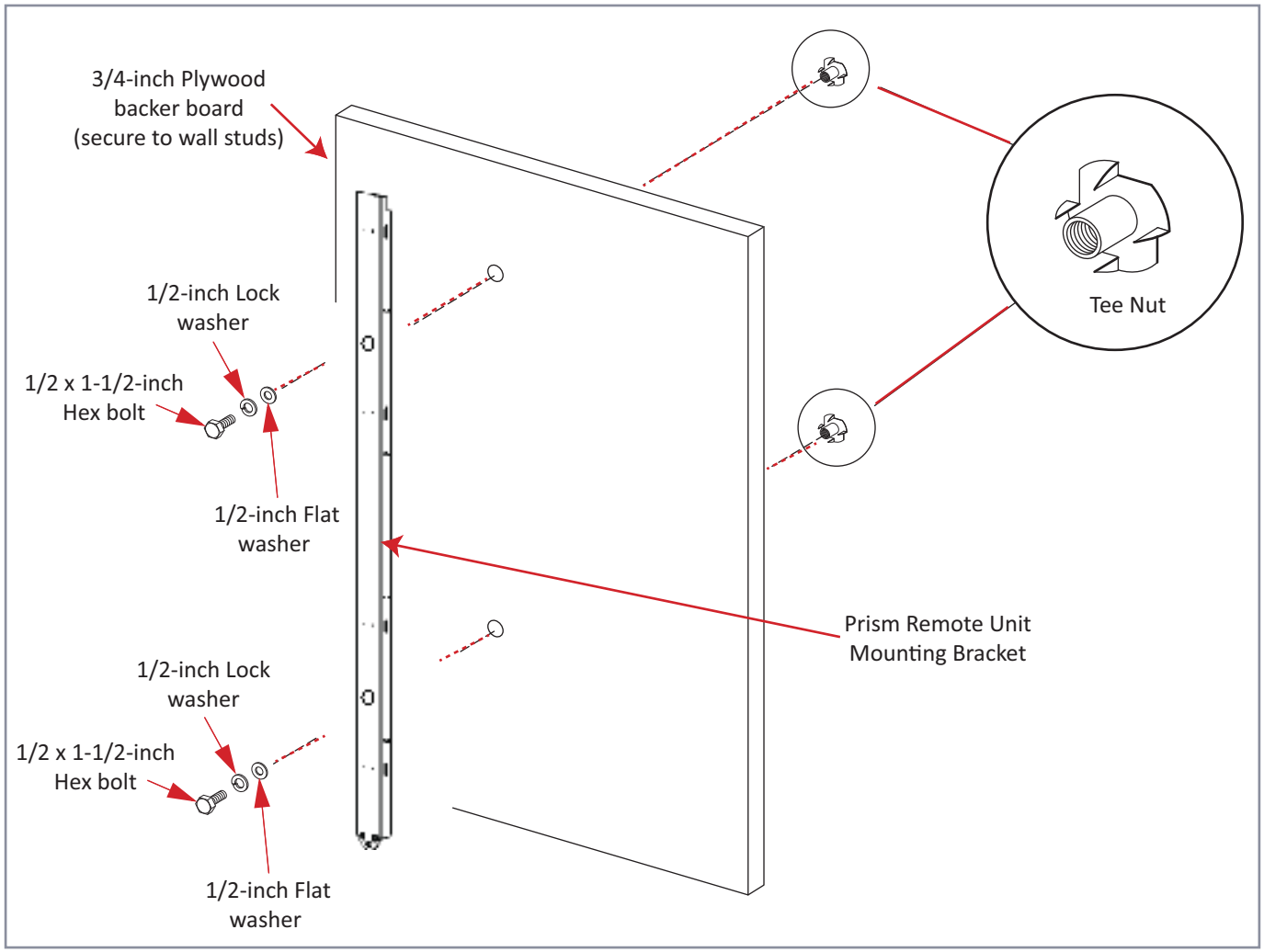

10 Hang the PRU from the Mounting Bracket as shown in "Installing a PRU on the Mounting Bracket" on page 51.

© March 2016 CommScope, Inc.

Masonry Wall Mounting

1 Refer to "Mounting Cautions" on page 42 before beginning this process.

2 Locate the Mounting Bracket provided with the PRU Mounting Kit.

3 Obtain the tools and supplies listed in "Tools Required for All Mounting Methods" on page 36 and "Additional Tools and Supplies Required for Flat-Surface Mounting" on page 37.

4 Verify that concrete anchors to be used are designed for 1/2-inch bolts.

5 Hold the Mounting Bracket in position on the wall.

6 Using a pencil, mark the location of each of the Mounting Bracket's two mounting holes on the wall. When mounting the PRU on a masonry surface, locate the mounting anchors as close as possible to the center of any bricks or blocks, especially the upper anchors.

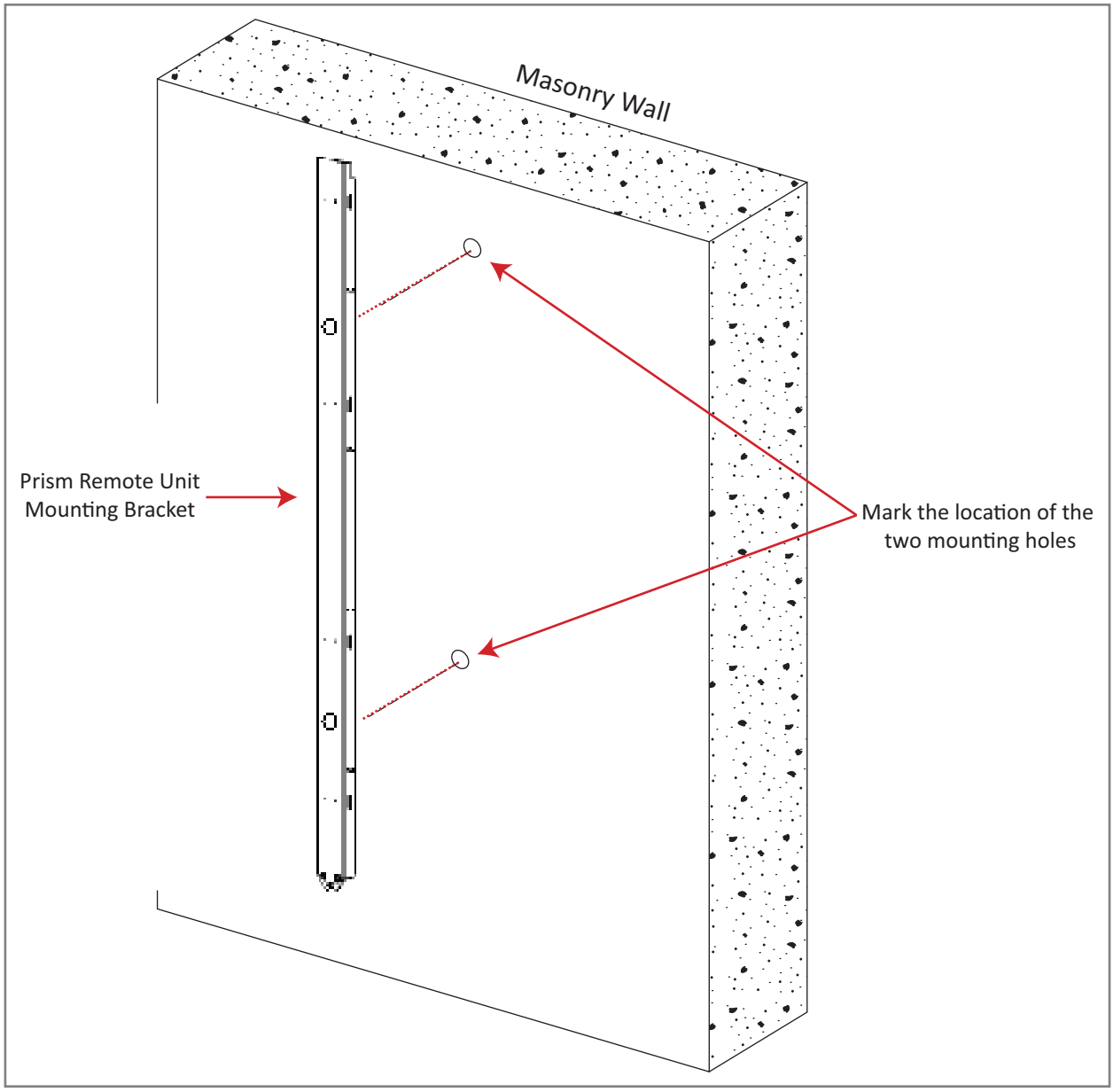

© March 2016 CommScope, Inc.

7 Refer to anchor manufacturer's technical data to ensure proper drill diameter to be used, and then drill holes in the wall at the locations marked in Step 6.

8 Refer to the following figure and do the following:

a Set the anchors in the wall.

b Locate the two 1/2 x 1-1/2-inch mounting bolts and place a 1/2-inch lock washer and 1/2-inch flat washer on each bolt.

c Place the Mounting Bracket over the two anchors. Thread a 1/2 x 1-1/2-inch mounting bolt (with installed washers) into each one of the anchors. Tighten bolts until secure.

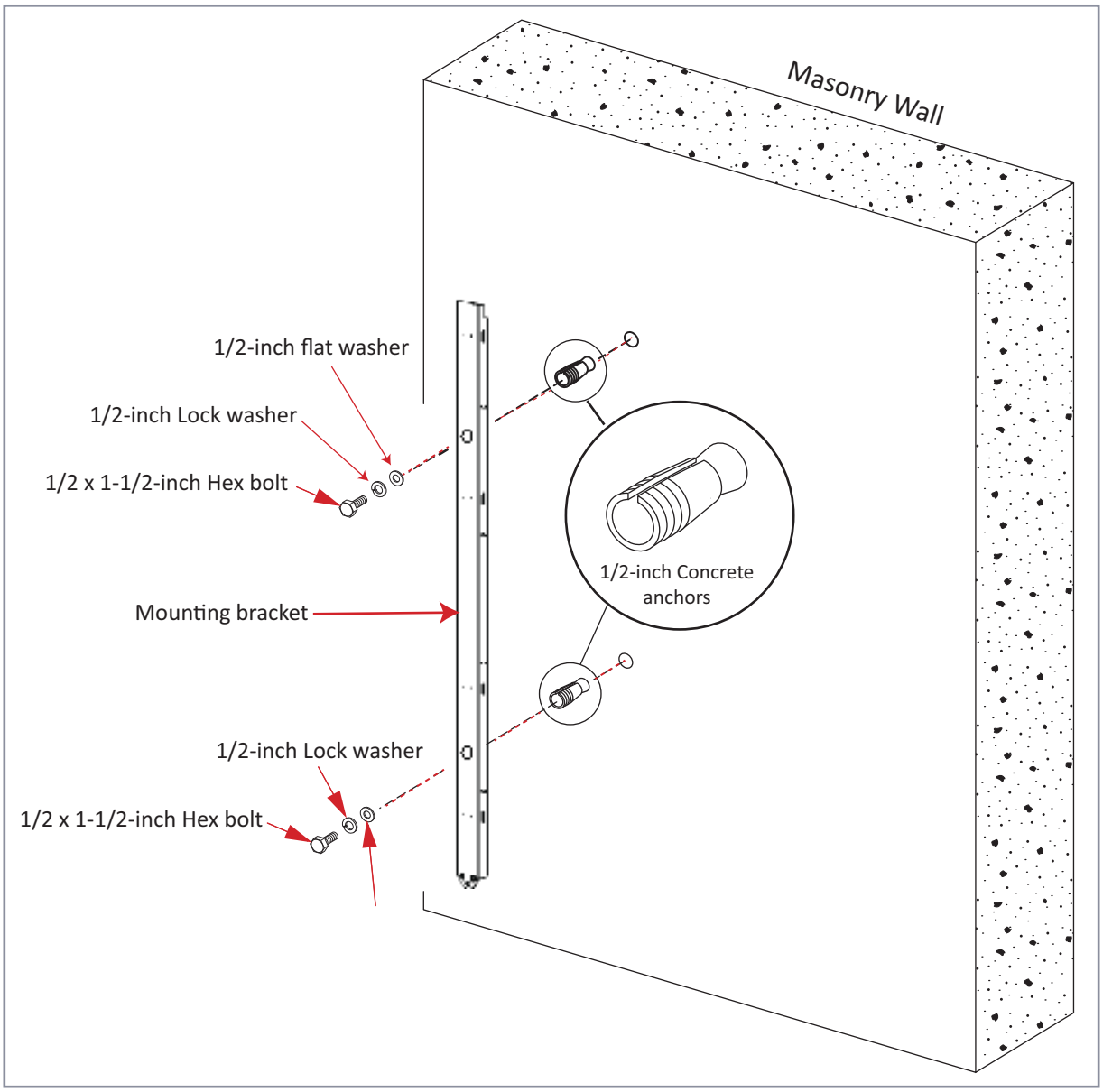

9 Hang the PRU from the Mounting Bracket as shown in "Installing a PRU on the Mounting Bracket" on page 51.

© March 2016 CommScope, Inc.

Installing a PRU on the Mounting Bracket

The basic procedure to hang a PRU on a Mounting Bracket is the same. The illustrations in this procedure, however, show a pole-mount installation.

1 Refer to "Mounting Cautions" on page 42 before beginning this process.

2 Use the D-Rings on the top of the PRU to hoist the PRU into position for attachment to the Mounting Bracket.

CAUTION! To avoid damage to the PRU and to avoid personal injury, use appropriate lifting equipment.

3 Mate the mounting hooks on the back of the PRU with the 8 horizontal hanging-bracket pins on the Mounting Bracket as shown below.

4 Lower the PRU until the Mounting Cap on the top of the PRU is snug against the top of the Mounting Bracket.

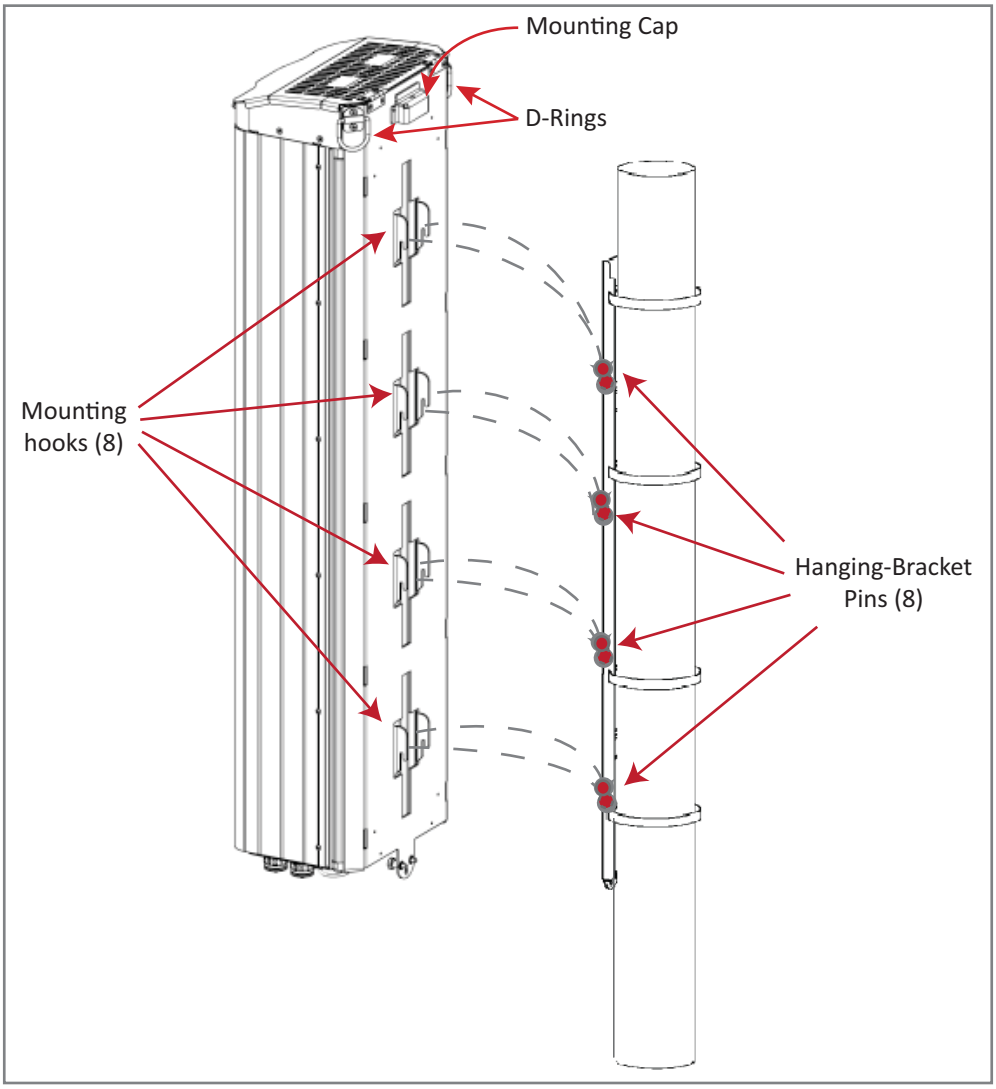

5 Use the flat-blade screwdriver to secure the two captive fasteners on the bottom of the PRU to the Mounting Bracket.

© March 2016 CommScope, Inc.

Ground the PRU Chassis

CAUTION! Avoid sharp bends in the ground wire.

CAUTION! For proper and safe equipment operation, use a #6 copper wire terminated with the provided ring terminal to link the PRU to an earth-ground source.

1. Locate a #6 AWG (4 mm) copper grounding wire long enough to reach an approved earth ground.
2. Use a socket wrench with a 3/8-inch deep socket to remove the two 10-32 Keps Nuts from the Dual-Ground connector on the bottom of the PRU.
3. Secure the ring terminal end of the grounding wire to the ground studs on the unit using the two 10-32 Keps Nuts removed in Step 2, and then torque the nuts to 18 in-lbs ± 1 in-lb.
4. Route the free end of the grounding wire to an approved earth ground source.
5. Cut the ground wire to length and connect it to the earth ground source as specified by local code or practice.

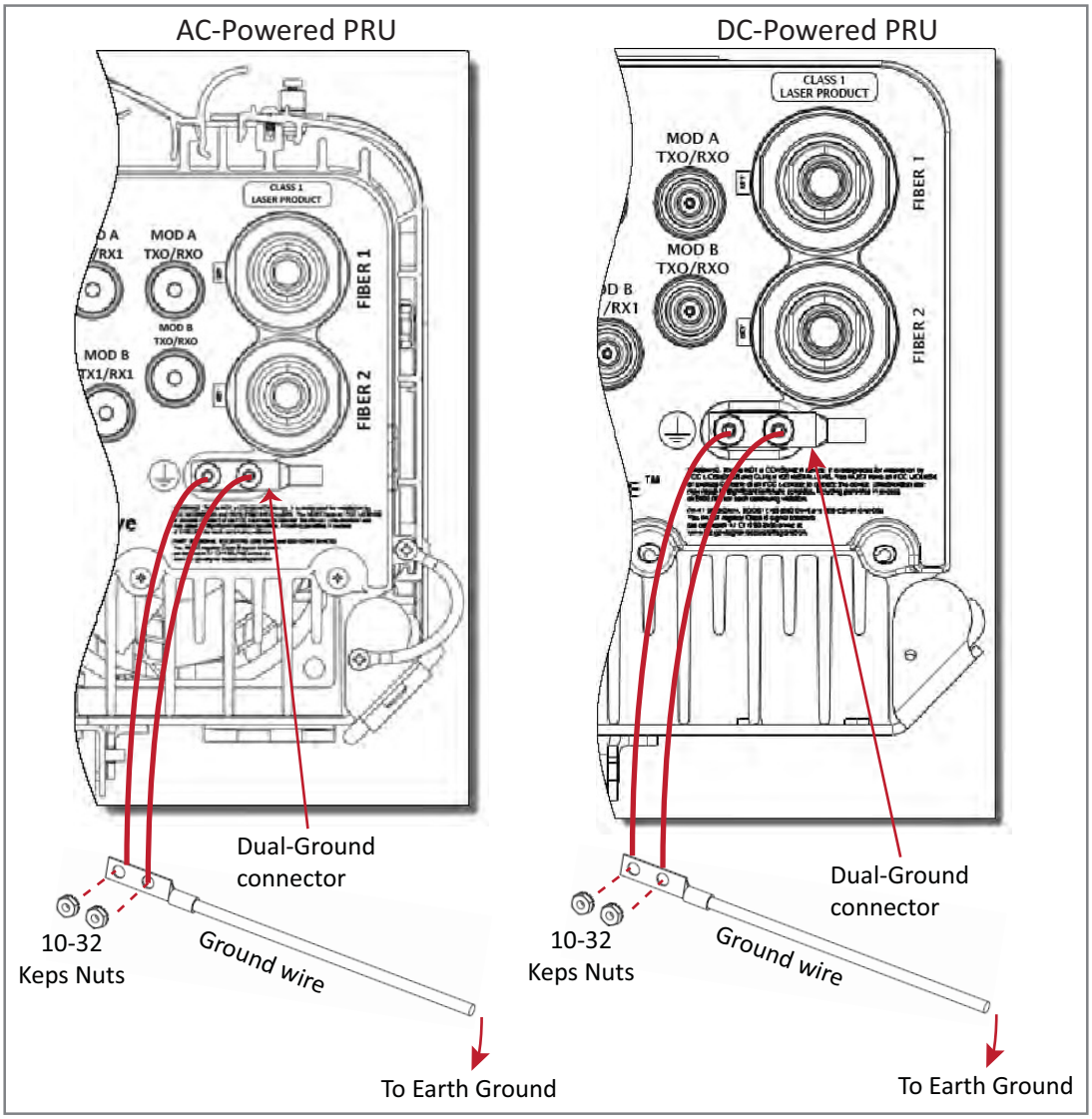

© March 2016 CommScope, Inc.

Connect a Network Cable to the PRU Chassis

The PRU provides a Network port that allows communications with the internal processor and access to the Host LAN network. That is, this provides a LAN extension to the Host network. The Network port is 10/100/1000 BASE-T/TX (802.3ab compliant) MDI and requires a minimum of CAT 5 cable.

NOTE: Although the interface might provide GigE, only 100 Mbps is provided for bandwidth between the Host and Remote.

The network cable must be terminated with a hardened RJ-45 male connector for connection to the Network port, as shown in the graphic to the right. The maximum cable length is 300 feet (91.4 m).

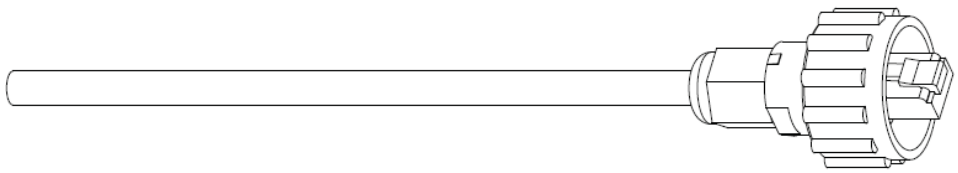

Network cable terminated with a hardened RJ-45 male connector

Use the following procedure to install the Network cable:

1 Remove the dust cap from the RJ-45 connector located at the bottom of the PRU.

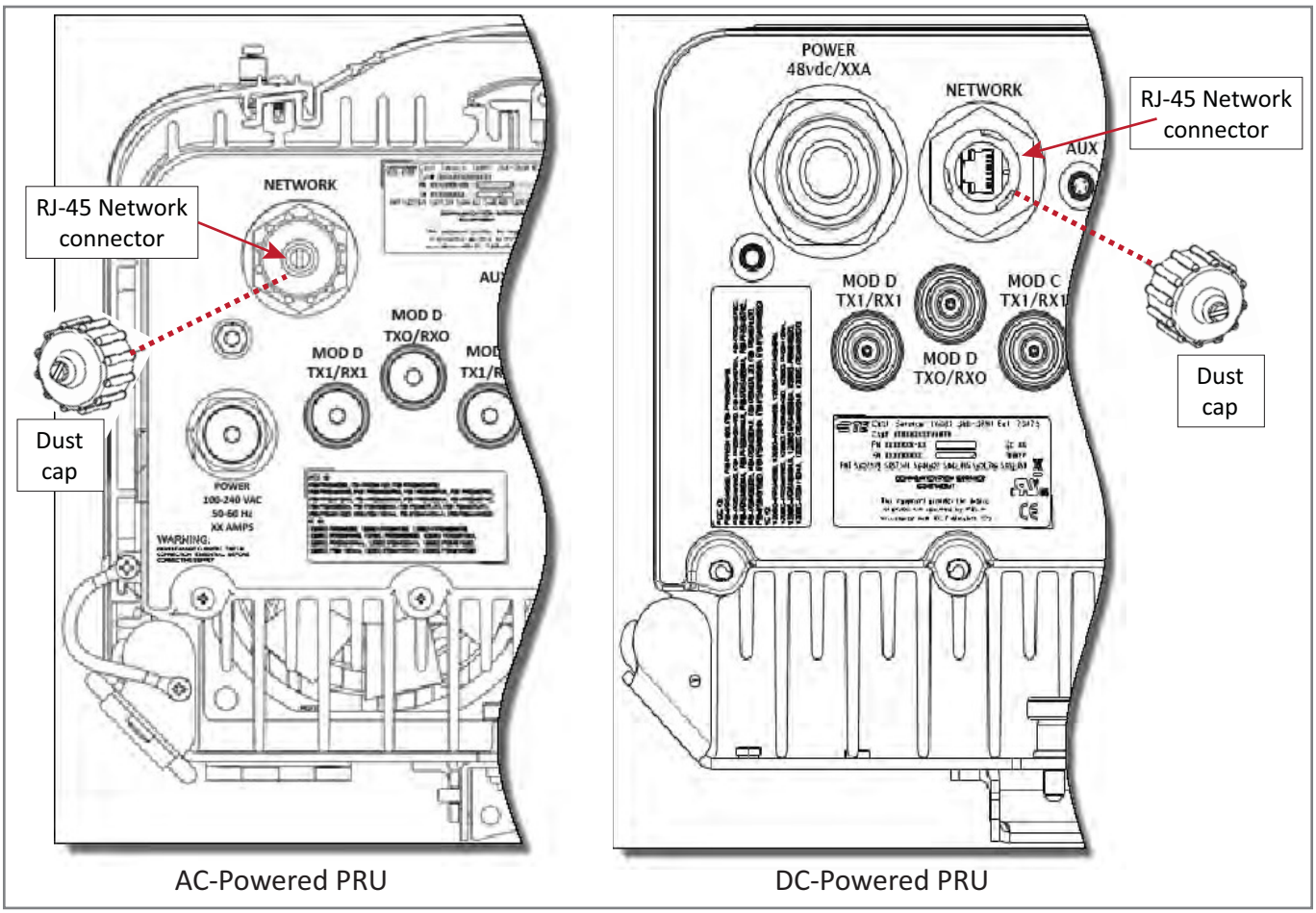

AC-Powered PRU DC-Powered PRU

2 Route the network cable from the network connection to the underside of the PRU.

3 Align the plug end of the RJ-45 cable connector with the RJ-45 port receptacle and then insert the cable plug into the port receptacle.

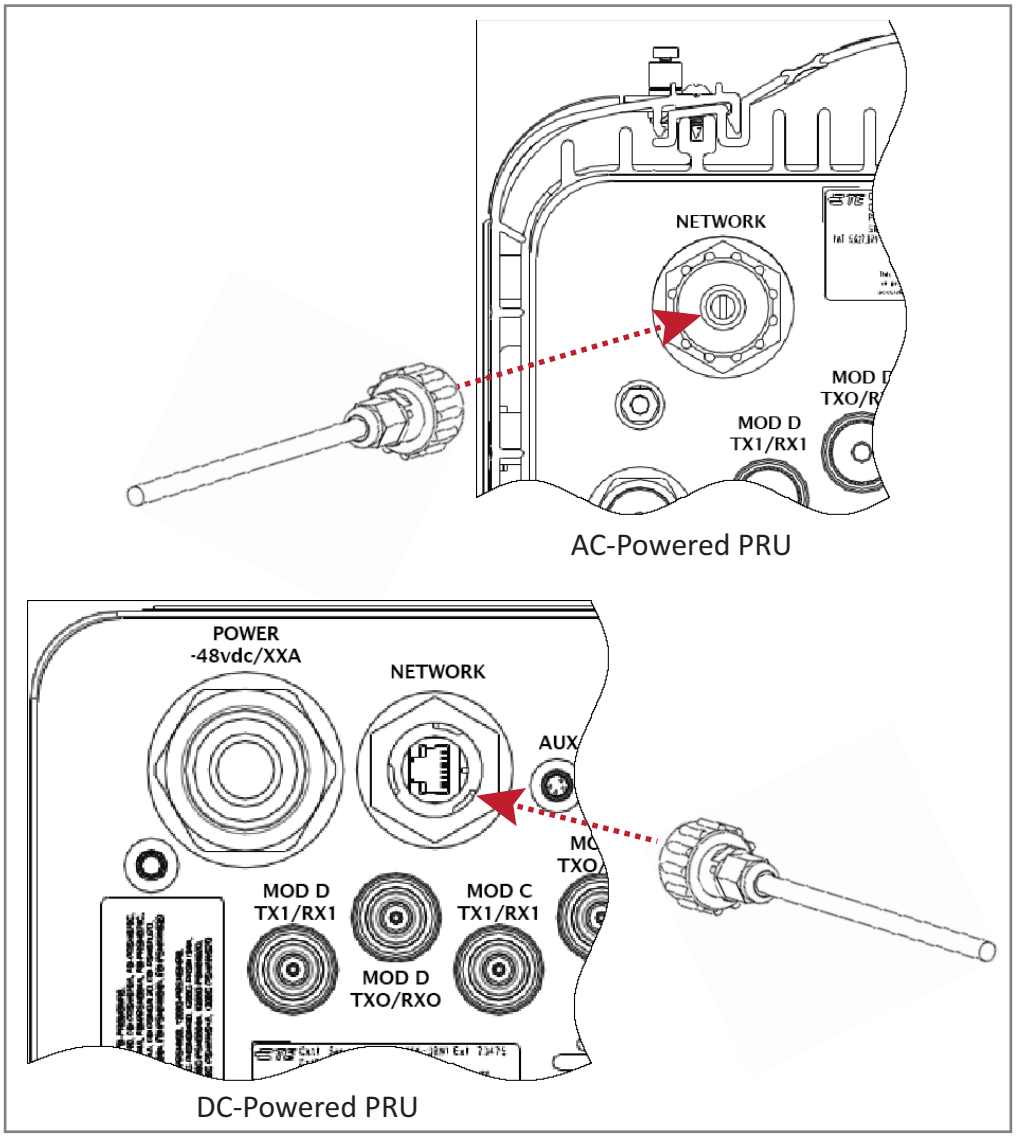

4 Slide the connector nut up to the port until it engages the connector locking mechanism.

5 Tighten the connector nut in a clockwise direction (if necessary, use a wrench to grip the connector nut) until it snaps past the indented position and locks into place. It may be necessary to apply 30 to 50 in-lbs (3.4 to 5.6 Nm) of torque to the connector nut in order to turn it past the indented position.

© March 2016 CommScope, Inc.

Connect Fiber Cable to the PRU Chassis

There are three fiber connector options for the Prism Remote Unit; follow the fiber cable installation process that is appropriate for the configuration of the PRU that you are installing:

- "Option A: Hardened Multi-Fiber Optic Connector" on page 55
- "Option B: Fiber Pass-Through Connector" on page 61
- "Option C: ProAx Connector (Legacy AC-Powered PRUs)" on page 65.

Option A: Hardened Multi-Fiber Optic Connector

NOTE: Use the following procedure to install the fiber cables using a Hardened Multi-Fiber Optic Connector. If the PRU that you are installing has a Fiber Pass-Through Connector, follow the procedure in "Option B: Fiber Pass-Through Connector" on page 61. If the PRU that you are installing has a legacy ProAx Connector, follow the procedure in "Option C: ProAx Connector (Legacy AC-Powered PRUs)" on page 65.

PRUs now have a Hardened Multi-Fiber Optic Connector (HMFOC), as shown in the picture at the right.

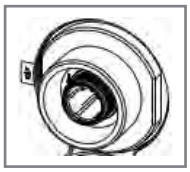

All PRUs with the HMFOC configuration require the purchase of a Multi-Fiber Optic Cable, such as the one shown below, which allows the PRU to interface with the OSP fiber.

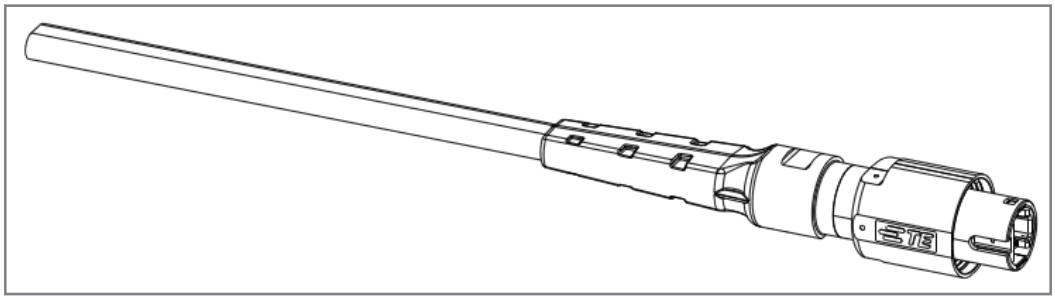

© March 2016 CommScope, Inc.

Table 21 identifies how the fibers in the Multi-Fiber Optic Cable correlate to the SeRF SFPs, which come pre-wired from the factory.

Table 21. *Multi-Fiber Optic Cable Color Codes*

Fiber Connector #	Color	SeRF SFP Connector	Fiber Connector #	Color	SeRF SFP Connector
1	Blue	1 TX	2	Blue	5 TX
1	Orange	1 RX	2	Orange	5 RX
1	Green	2 TX	2	Green	6 TX
1	Brown	2 RX	2	Brown	6 RX
1	Gray	3 TX	2	Gray	7 TX
1	White	3 RX	2	White	7 RX
1	Red	4 TX	2	Red	8 TX
1	Black	4 RX	2	Black	8 RX

NOTE: **Each SFP utilizes a single fiber optic pair. Each SFP can support up to 12 timeslots with up to 75 MHz of bandwidth. Each fiber connector on the FRU contains 4 fiber pairs, supporting the use of 4 SFPs. If additional SFPs are necessary, use the second fiber connector (FIBER 2).**

© March 2016 CommScope, Inc.

Figure 13 illustrates how the Multi-Fiber Optic Cables used with HMFOC connectors run between the Fiber 1 and Fiber 2 connectors and the SFPs.

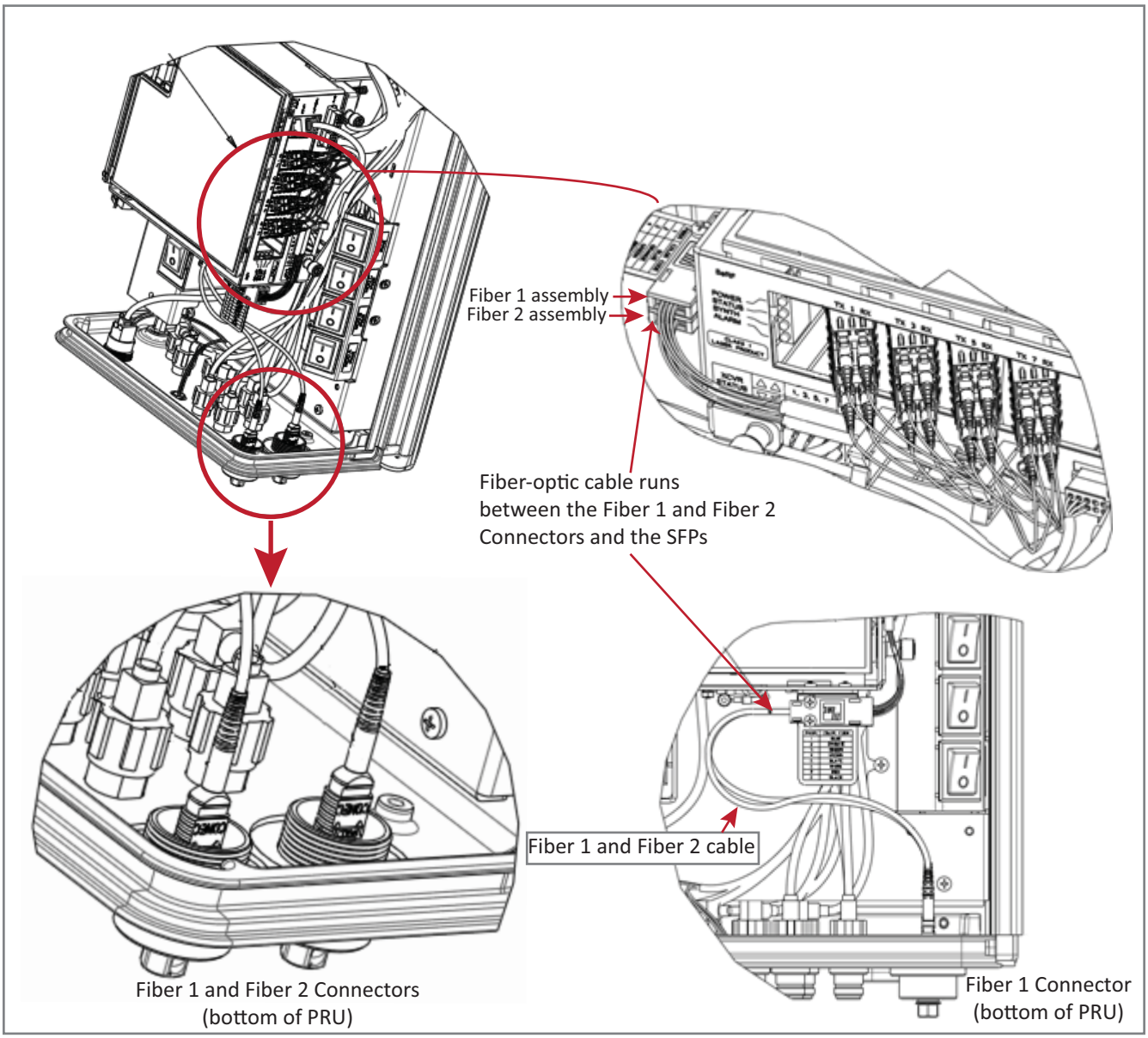

Figure 13. Multi-Fiber Optic Cabling

© March 2016 CommScope, Inc.

Figure 14 shows the cabling requirements for Single- and Dual-WDM units.

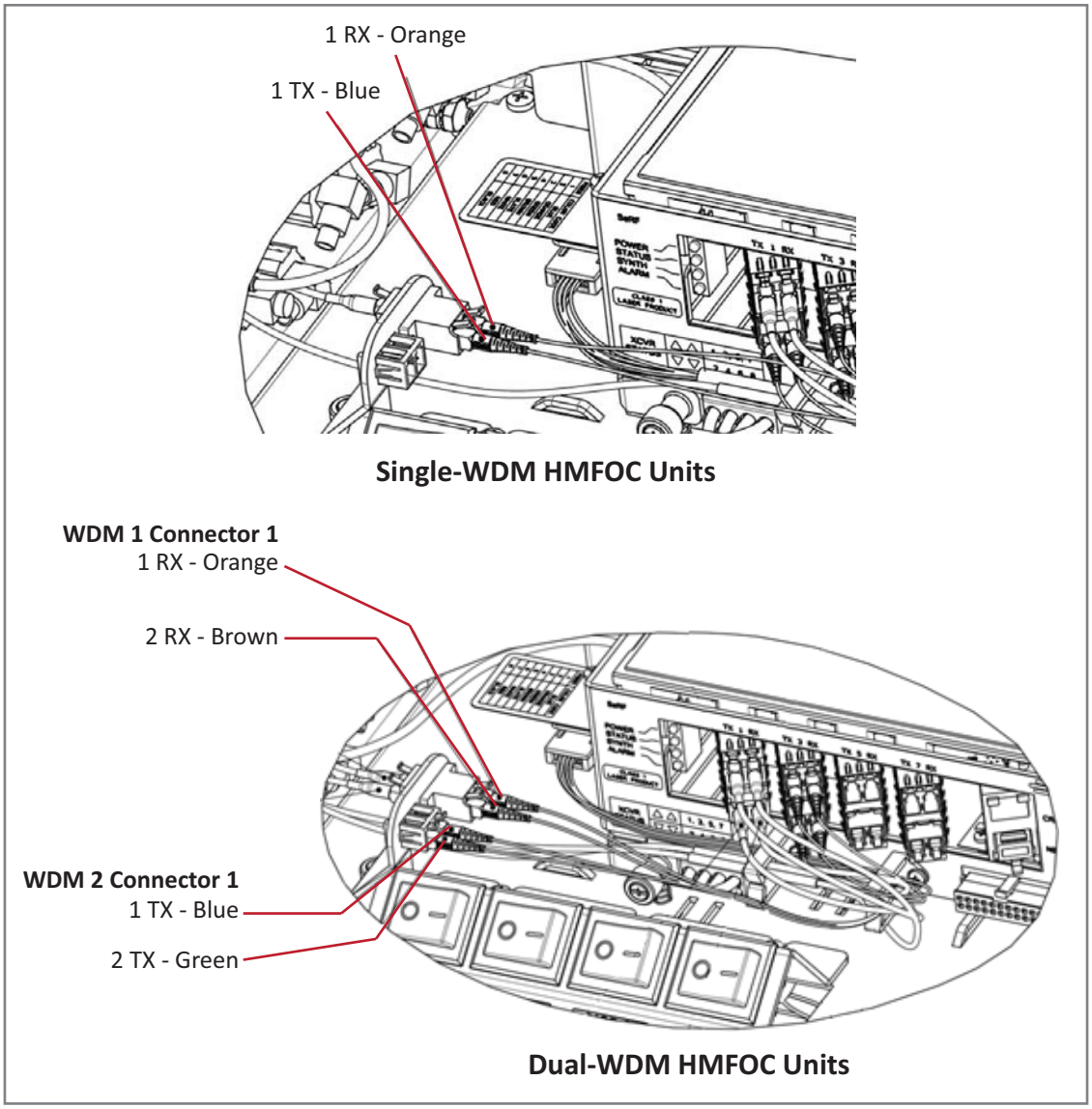

Figure 14. Multi-Fiber Optic Cabling for Single- and Dual- WDM Units

© March 2016 CommScope, Inc.

Use the following procedure to install the fiber cables using the HMFOC.

1 Use a 7/16” wrench or socket to remove the dust-cover cap from the Fiber 1 connector, located at the bottom of the PRU. You need to turn the cap counter-clockwise for several turns.

NOTE: Do not remove the dust cover from the Fiber 2 connector until directed to do so.

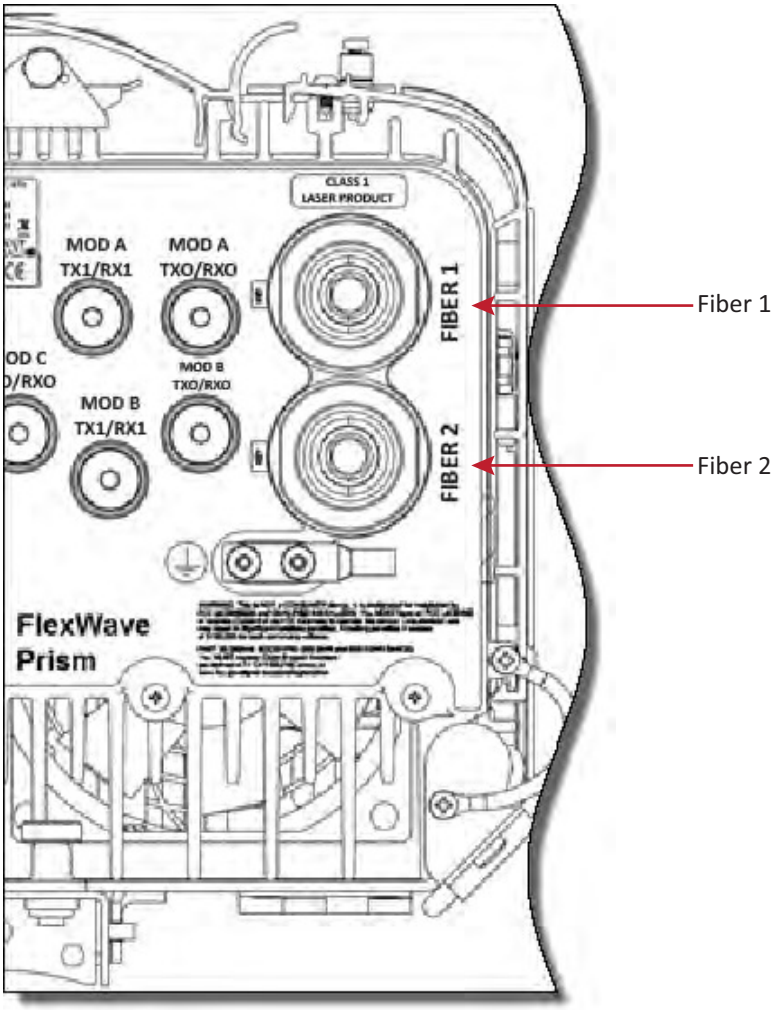

AC or DC PRU

(The Fiber 1 and Fiber 2 connectors are in the same location for both the AC- and DC-powered PRUs.)

2 Rotate the coupling nut of the Multi-Fiber Optic cable counter-clockwise to remove its dust-cover cap.

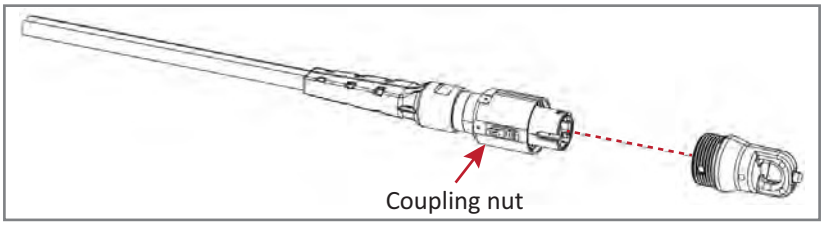

3 Clean the Multi-Fiber Optic cable connector using industry approved cleaning procedures.

4 Clean the Fiber 1 port using industry approved cleaning procedure.

5 Insert the Multi-Fiber Optic cable into the FIBER 1 connector; refer to the introductory material for this section for information on cabling requirements.

   a Align the plug end of the cable with the key as indicated on the overlay for the FIBER 1 connector, as shown below.

   b Use a 9/16” wrench to rotate the coupling nut clockwise; tighten to 2-4 in-lbs.

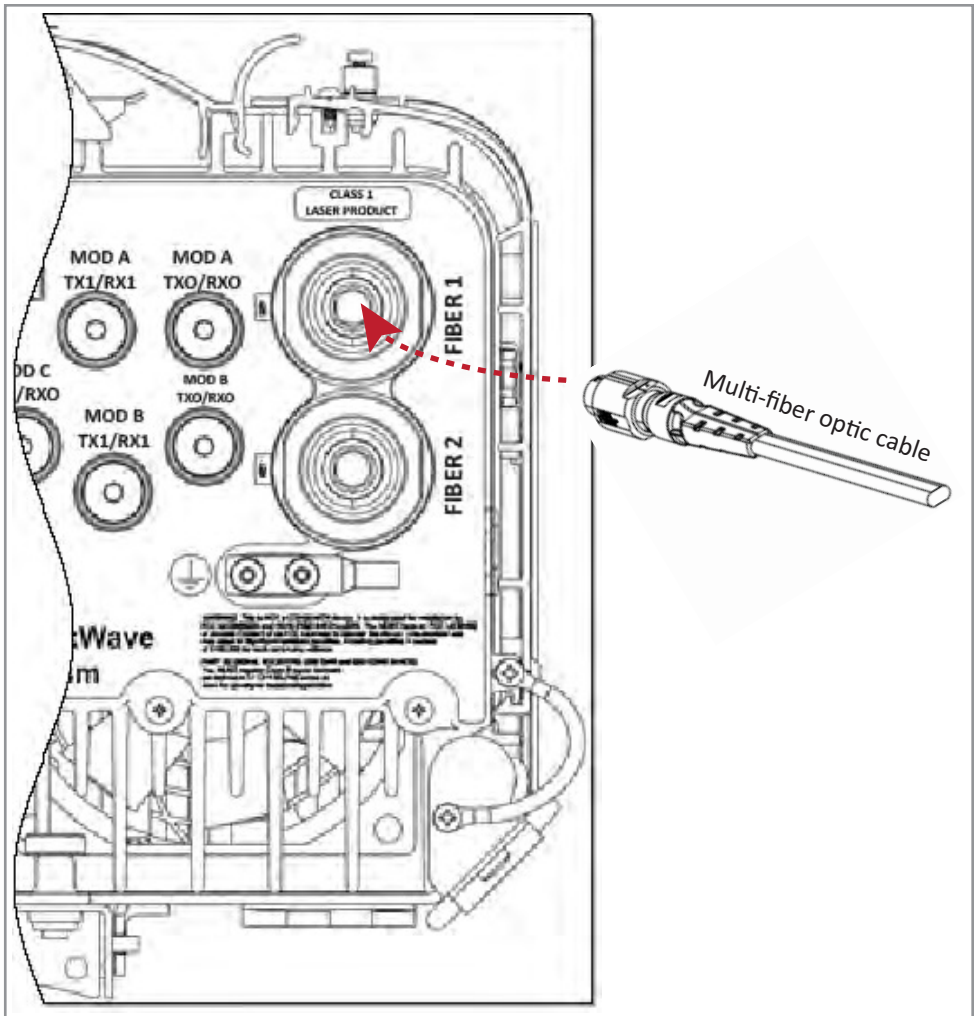

AC or DC PRU

(The Fiber 1 and Fiber 2 connectors are in the same location for both the AC- and DC-powered PRUs.)

6 Route the Multi-Fiber Optic cable from the underside of the PRU to the OSP box.

7 Secure fiber cable in place following local practices.

8 If necessary, complete Step 1 through Step 7 to add a second Multi-Fiber Optic cable to the FIBER 2 connector.

9 Continue to "Connect the Antenna Cable” on page 69.

© March 2016 CommScope, Inc.