EMC TEST REPORT

For the 28110 MainStreet T1 Circuit Emulation

Ethernet Network Interface Unit

TEST DATE: 99.02.25

Test Performed:

FCC Part 15/ICES-003 Class B

NOTICE

This document contains confidential information which is proprietary to Newbridge Networks Corporation. No part of its contents may be used, copied, disclosed or conveyed to any party in any manner whatsoever without prior written permission from Newbridge Networks Corporation.

Newbridge and MainStreet are trademarks of Newbridge Networks Corporation

© Copyright 1999 Newbridge Networks Corporation, All Rights Reserved

ABSTRACT

This document provides the test procedure and test report used to fulfill the requirements of the EMC Approvals Group personnel and the product designers to evaluate the 28110 MainStreet T1 Circuit Emulation NIU during EMC(Electromagnetic Compatibility) testing.

The test data contained in this report is evidence of compliance to specified EMC standards for the units described herein.

Complete procedures describing the activities of the EMC Approvals Group are found in Newbridge internal document HQP0009 [26], Regulatory Approvals Overview.

This document contains Confidential Information of Newbridge Networks Corporation.

GLOSSARY

ANSI	*American National Standards Institute*
Bellcore	*BELL Communications Research* A research company jointly formed and operated by the Bell operating companies in the United States concerned with network environmental, reliability and quality issues.
BER	*Bit Error Rate*. The ratio of incorrect bits to total number of bits transmitted.
ESD	*ElectroStatic Discharge*
EUT	*Equipment Under Test*
IEC	*International Electrotechnical Commission*
ITE	*Information Technology Equipment*
NIST	*National Institute of Standards and Technology*
RBOC	*Regional Bell Operating Company*
TBD	*To Be Determined*
CISPR	*International Special Committee on Radio Interference*
CW	*Continuous Wave*
EMC	*Electro Magnetic Compatibility*
EN	*European Standard*
FCC	*Federal Communications Commission*
OATS	*Open Area Test Site*
RF	*Radio Frequency*

This document contains Confidential Information of Newbridge Networks Corporation.

TABLE OF CONTENTS

ABSTRACT 2
GLOSSARY 3
TABLE OF CONTENTS 4
1 INTRODUCTION 6
Purpose 6
Scope 6
2 EQUIPMENT UNDER TEST (EUT) 7
Equipment Description 7
EUT Configuration 7
EUT Cables 7
System Test Configuration 8
Justification 8
Functional Interconnect 10
Equipment Modifications 11
3 REGULATORY EMC COMPLIANCE SUMMARY 12
4 RADIATED EMISSIONS (ELECTRIC FIELDS) 13
Test Specification 13
Deviations From the Test Specification 13
Test Location 13
Tested by 14
Test Procedure 14
Operating and Environmental Conditions 17
Test Equipment and Support Equipment 17
5 CONDUCTED EMISSIONS 19
5.1 Test Specification 19
5.2 Deviations From the Test Specification 19
5.3 Test Location 19
5.4 Tested by 19
5.5 Test Procedure 20
5.6 Operating and Environmental Conditions 22
5.7 Test Equipment and Support Equipment 23
5.8 Results - Test Data 23
REFERENCES 25
HISTORY 27

LIST OF FIGURES

FIGURE 2-1 DIAGRAM OF SYSTEM CONFIGURATION 9
FIGURE 2-2 BLOCK DIAGRAM OF FUNCTIONAL INTERCONNECT 10
FIGURE 4-1 RADIATED EMISSIONS (ELECTRIC FIELD) 15
FIGURE 4-1 RADIATED EMISSIONS (ELECTRIC FIELD) 16
FIGURE 5-1 CONDUCTED EMISSIONS 21

LIST OF TABLES

TABLE 3-1 REGULATORY EMC COMPLIANCE REQUIREMENTS 12
6-1 RADIATED EMISSIONS (ELECTRIC FIELD) 16
7-1 CONDUCTED EMISSIONS 21

This document contains Confidential Information of Newbridge Networks Corporation.

1 INTRODUCTION

Purpose

This document provides a test plan and report for EMC testing of the 28110 MainStreet T1 CE NIU according to applicable EMC standards. EMC requirements are found in tables at the beginning of the sections for Regulatory EMC Compliance and Bellcore EMC Compliance.

Scope

This document shall be used to evaluate 28110 MainStreet T1 CE NIU conformance to the test requirements contained in applicable EMC standards.

This document contains Confidential Information of Newbridge Networks Corporation.

2 EQUIPMENT UNDER TEST (EUT)

Equipment Description

The 28110 MainStreet T1 CE NIU is a wireless customer premise equipment which provides a single T1 connection to the customer equipment such as a T1 multiplexer or PBX. The NIU is a separate rack mountable chassis which contains a radio modem card and power supply in addition to a service card.

EUT Configuration

Model Number	Name and Description	S/N
90-2507-12	Standalone Hub Card	03980104631
90-3346-01	Control Card 2	09980114427
90-4905-03	OC3 -2 MMF	20980102273
90-4907-01	High Powered Peripheral Shelf	Prototype
28110	**T1 CE NIU**	**Prototype**

EUT Cables

Part Number	Cable Type	Length (m)	Shield	Connector Hoods
90-2296-04	ISL CABLE OPTICAL	10.0	none	none
N/A	T1 RJ45 Cable	5.0	Foil	metalized

System Test Configuration

Justification

For all tests, the EUT was configured to simulate a typical application. The testing was conducted using only cables recommended for use with the EUT by Newbridge. The EUT was installed as per Newbridge Technical Practices unless noted otherwise for a particular EMC test. Attention was made to follow any recommended chassis grounding, cable routing, etc. In the Newbridge Technical Practices. The EUT was placed according to the required set ups detailed in the test specifications and methods within this document for each type of EMC test (ESD, EFT, RF Immunity, etc.) Appropriate set ups for floor-standing or table-top equipment were followed. Wall-mounted equipment was tested as per table-top configuration .All test equipment used met the applicable requirements of CISPR 16, ANSI C63.4, CSA 108.8 .

Emissions measurements were made using average or quasi-peak detectors as specified in the methods listed for each EMC test type. For narrow band emissions, peak detectors were used in lieu of quasi-peak detectors to accelerate the measurement process.

All emissions data include the following minimum:

- the 6 highest emissions relative to the limit;
- or 6 measurements of the ambient noise level throughout the frequency range tested, where no emissions were observable;
- all emissions within 20 dB of the limit at EUT operating frequencies (clock rates, bus speeds, transmission rates, carrier frequencies, etc.) and
- the worst case antenna polarity (horizontal/vertical).

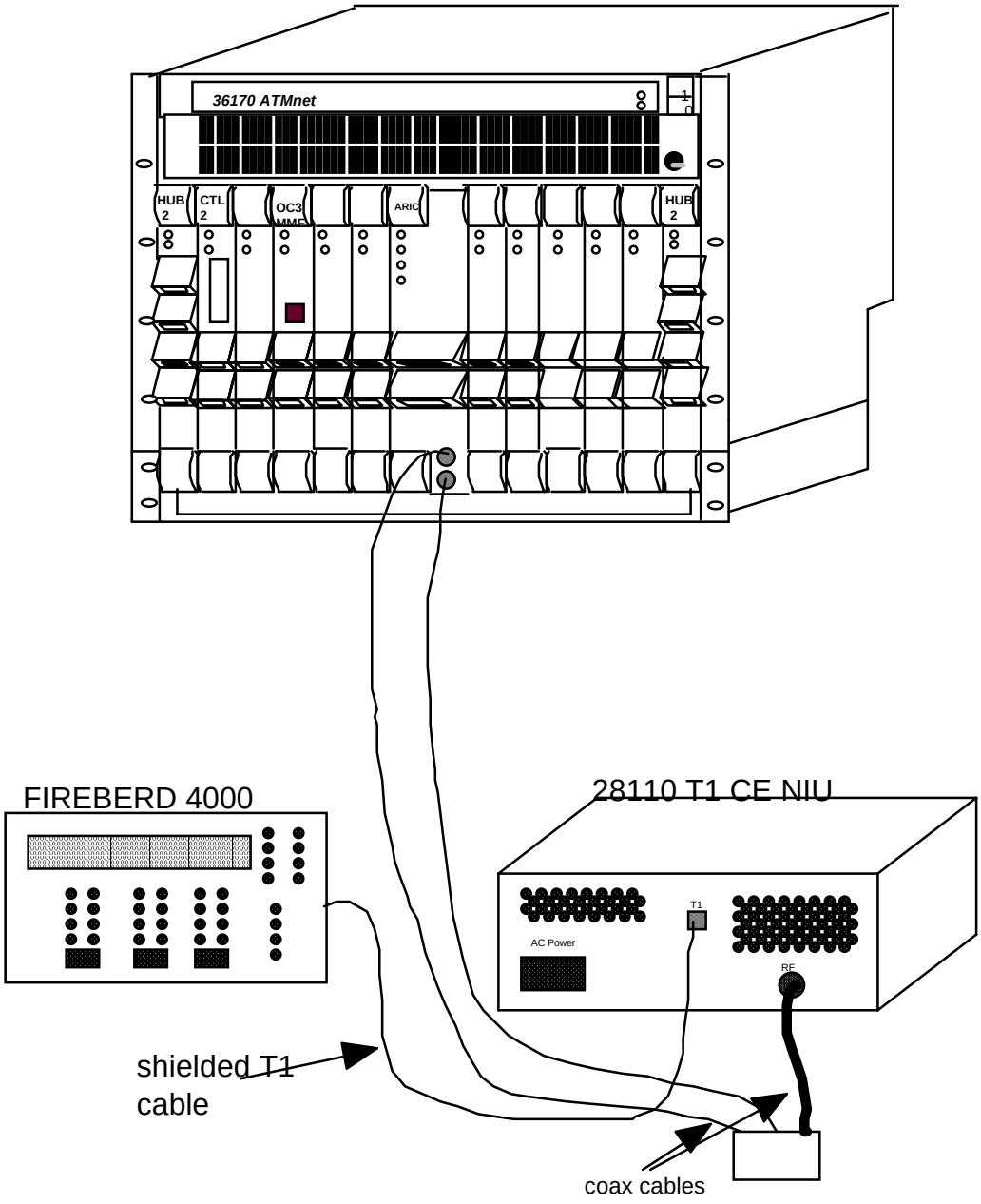

Figure 2-1 Diagram of System Configuration

Functional Interconnect

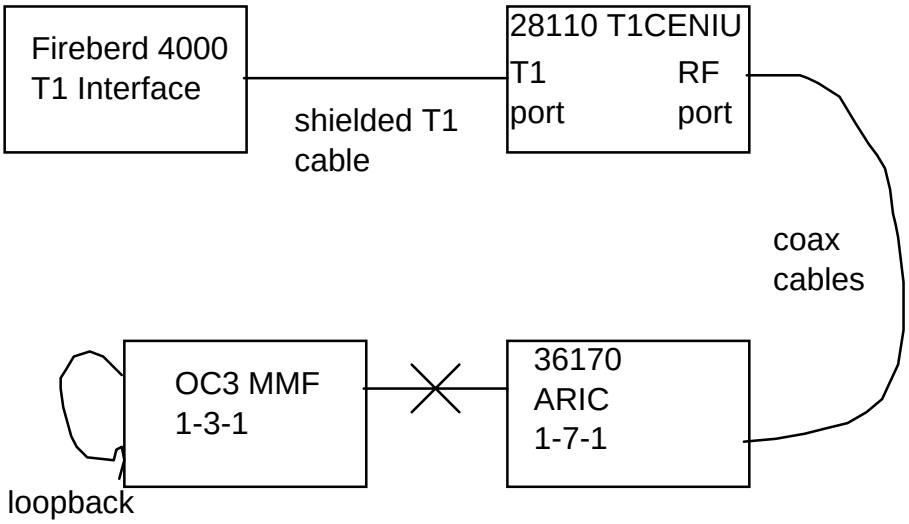

Figure 2-2 Block Diagram of Functional Interconnect

Equipment Modifications

No changes required for compliance.

This document contains Confidential Information of Newbridge Networks Corporation.

3 REGULATORY EMC COMPLIANCE SUMMARY

This report has been read and approved by the following departments responsible for its implementation. All changes found necessary for compliance will be incorporated into production.

The EUT as configured in this report meets the requirements indicated below. The results of these tests apply only to items tested and provide an indication of hardware quality during operation and maintenance in their intended electromagnetic environment.

Basic Standard	**Measurement Type**	**Test Requirement**
FCC Part 15:1990, IC ICES-003: 1995	Radiated Emissions and Conducted Emissions	Class B

Table 3-1 Regulatory EMC Compliance Requirements

Andrew Roberts_____
Manager EMC Approvals Review

Date_____

Don Moncion_____
Chairman of the ECO Board

Date_____

George Sinfield_____
Approval Specialist

Date_____

4 RADIATED EMISSIONS (ELECTRIC FIELDS)

Test Specification

Standard	FCC Part 15 Subpart B and ICES-003		
Method	ANSI C63.4: 1992		
Performance Criterion	Class B, 3 meters		
Limit	**Frequency (MHz)**	**Field Strength (dBµV/m)**	**Field Strength (µV/m)**
	30 to 88	40	100
	88 to 216	44	150
	216 to 960	46	200
	above 960	49.5	500
Summary of Results	Pass. Highest emission: 6.8 dB below limit @ 59.99 MHz.		

Deviations From the Test Specification

None

Test Location

Test Laboratory Electronic Test Center

Address 302 Legget Drive
Kanata, Ontario K2K 1Y5

Prime Contact Dave Scribailo, Manager Electromagnetic Services

This document contains Confidential Information of Newbridge Networks Corporation.

Tested by

Test Engineer George Sinfield, Approvals Specialist

Company Newbridge Networks Corporation

DATE OF TEST: 99.02.25

Test Procedure

All antenna measurements were taken according to the specified measurement distance in the required test methods listed above for radiated emissions testing.

The EUT was rotated 360˚ on a turntable, all the cables and cords manipulated and antennas moved through the entire range of height specified to maximize emissions. Final measurements were performed with antennas in both horizontal and vertical polarities. Worst case antenna polarity (horizontal/vertical) was recorded for each emission.\

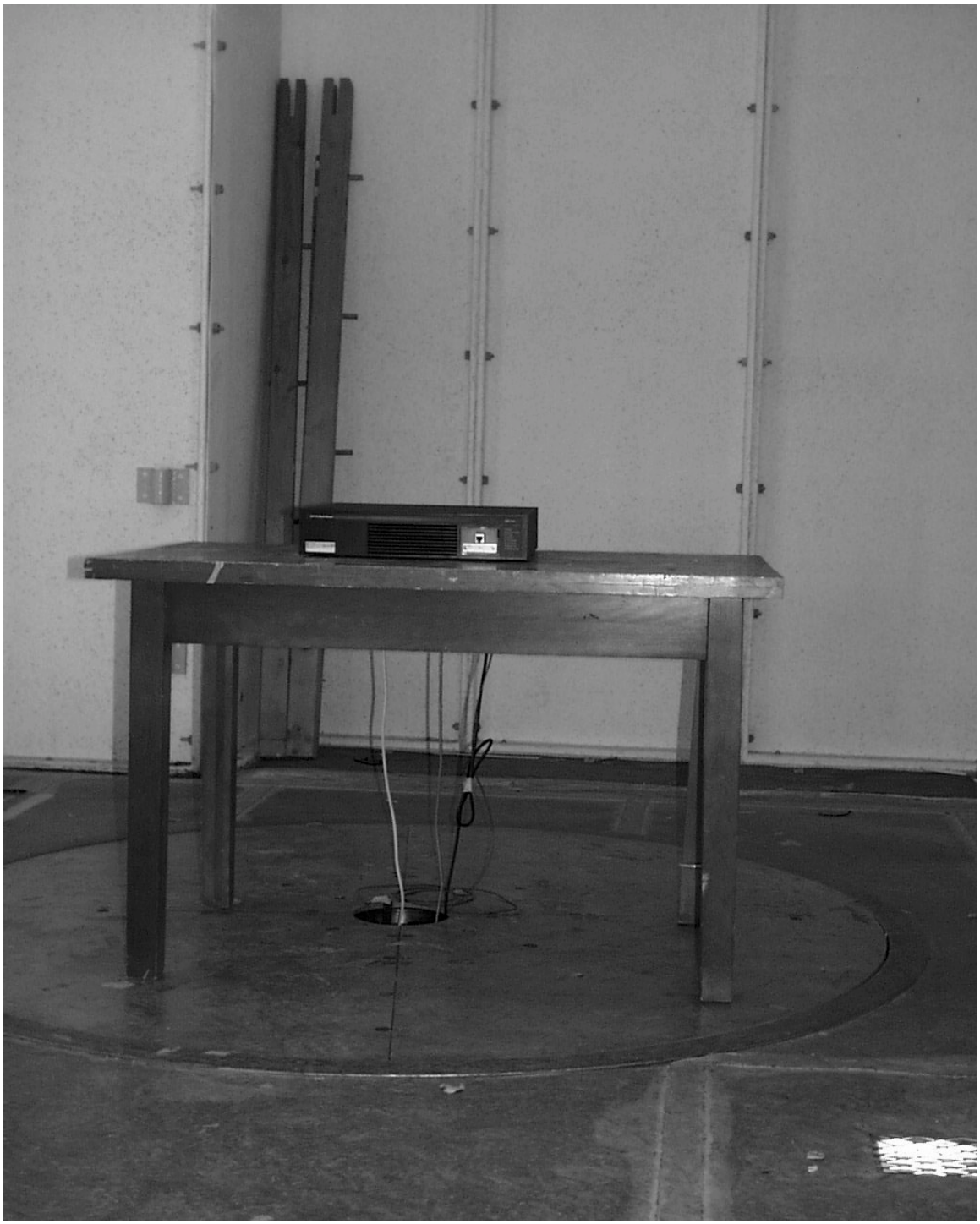

Figure 4-1 Radiated Emissions (Electric Field)

This document contains Confidential Information of Newbridge Networks Corporation.

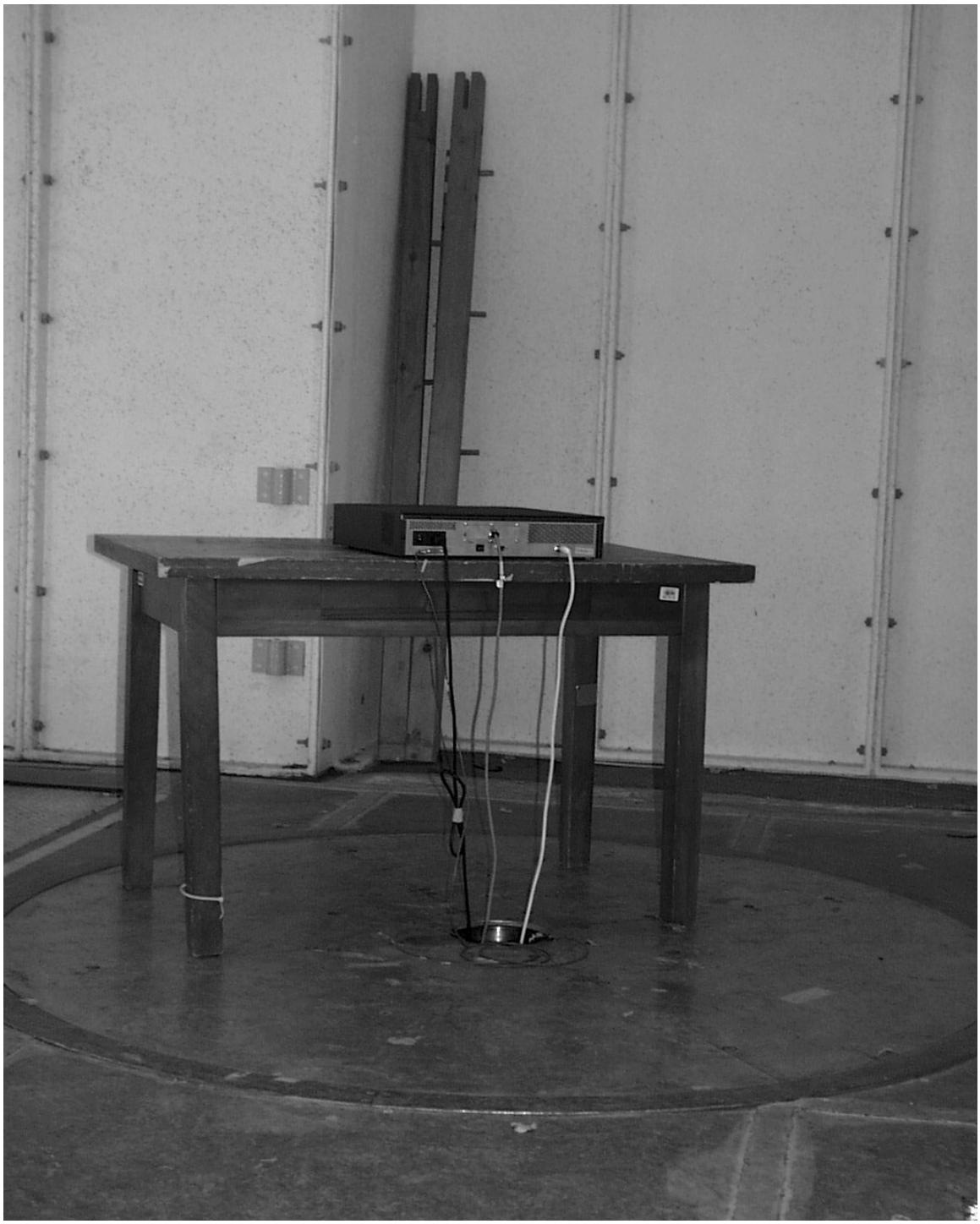

Figure 4-1 Radiated Emissions (Electric Field)

This document contains Confidential Information of Newbridge Networks Corporation.

Operating and Environmental Conditions

Power Line Voltage	115VAC
Temperature	21.0 ˚C
Frequency	60 Hz
Relative Humidity	40.0 %

Test Equipment and Support Equipment

Instrument	Mftr./Model / S/N	Range	Calibration
Rohde & Schwarz Test Receiver	Model ESVP S/N 354.3000.52	20 to 1.3 GHz	Cal Date 08/11/98 Due Date 08/11/99
Biconlog	Antenna Research Associates Model LPB- 250/A S/N 1021	30 - 2 GHz	Cal Date 03/11/98 Due Date 03/11/99
BERT Tester	Fireberd Model 4000 S/N 6578	N/A	Cal Date 23/02/99 Due Date 23/02/00

Results - Test Data

Freq (MHz)	Measure (dBµV)	Factor (dB/m)	Field Strength (dBµV/m)	FCC Limit (dBµV/m)	Pol. (V/H)
41.12	14.6	16.3	30.9	40.0	V
54.99	3.7	16.0	19.7	40.0	V
55.70	16.1	15.6	31.7	40.0	V
56.17	10.0	15.5	25.5	40.0	V

This document contains Confidential Information of Newbridge Networks Corporation.

59.99	19.3	13.9	33.2	40.0	V
68.78	21.6	9.5	31.1	40.0	V
69.24	21.3	9.3	30.6	40.0	V
70.00	15.0	8.9	23.9	40.0	V
199.99	16.1	12.4	28.5	44.0	V
214.72	15.9	12.5	28.4	44.0	V
225.00	4.7	12.8	17.5	46.0	V
240.00	7.7	13.9	21.6	46.0	V
243.00	13.5	14.0	27.5	46.0	V
275.00	1.6	14.4	16.0	46.0	V
332.00	8.5	15.9	24.4	46.0	V
420.97	5.2	17.6	22.8	46.0	V
729.24	5.5	22.6	28.1	46.0	V
771.76	6.9	23.1	30.0	46.0	V
894.40	4.7	25.0	29.7	46.0	V
250.00	0.1	13.5	13.6	46.0	H
308.80	9.4	15.0	24.4	46.0	H
325.00	11.8	15.5	27.3	46.0	H
333.53	5.2	15.8	21.0	46.0	H
350.00	17.6	16.1	33.7	46.0	H
565.95	10.6	19.6	30.2	46.0	H
603.00	8.4	20.5	28.9	46.0	H
699.00	0.1	21.6	21.7	46.0	H

where Factor (dB/m) = antenna factors + preamplifier gain + cable loss + attenuators

Field Strength (dBμV/m) = Measure (dBμV) + Factor (dB/m)

FCC Limit (dBμV/m) = FCC Part 15 limit

CISPR Limit (dBμV/m) = CISPR 22/EN55022/AS/NZS 3548 limit

5 CONDUCTED EMISSIONS

5.1 Test Specification

Standard	FCC Part 15 Subpart B		
Method	ANSI C63.4: 1992		
Performance Criterion	Class B		
Limit	**Frequency (MHz)**	**Voltage (dBµV)**	**Voltage (µV)**
	0.45 to 30 MHz	48*	250
Summary of Results	Pass. Highest emission: 12.08 dB below the limit 27.88 MHz.		

* Broadband reduction (13 dB) may be applied according to conditions in FCC Part rules section 15.107

5.2 Deviations From the Test Specification

None

5.3 Test Location

Test Laboratory Electronic Test Center

Address 302 Legget Road
Kanata, Ontario K2K 1Y5

Prime Contact Dave Scribailo, Manager Electromagnetics Services

5.4 Tested by

Test Engineer George Sinfield, EMC Specialist

Company Newbridge Networks Corporation

5.5 Test Procedure

All the cables and cords were placed according to the conducted emissions' methods listed in above to maximize emissions. Final measurements were performed in the worst-case cable positions. To maximize speed of testing, the EUT was first tested to Quasi-peak limits in peak mode. Where the quasi-peak limits are met under these conditions, the test results were not repeated with a quasi-peak detector. Phase and neutral measurements were recorded for each emission.

This document contains Confidential Information of Newbridge Networks Corporation.

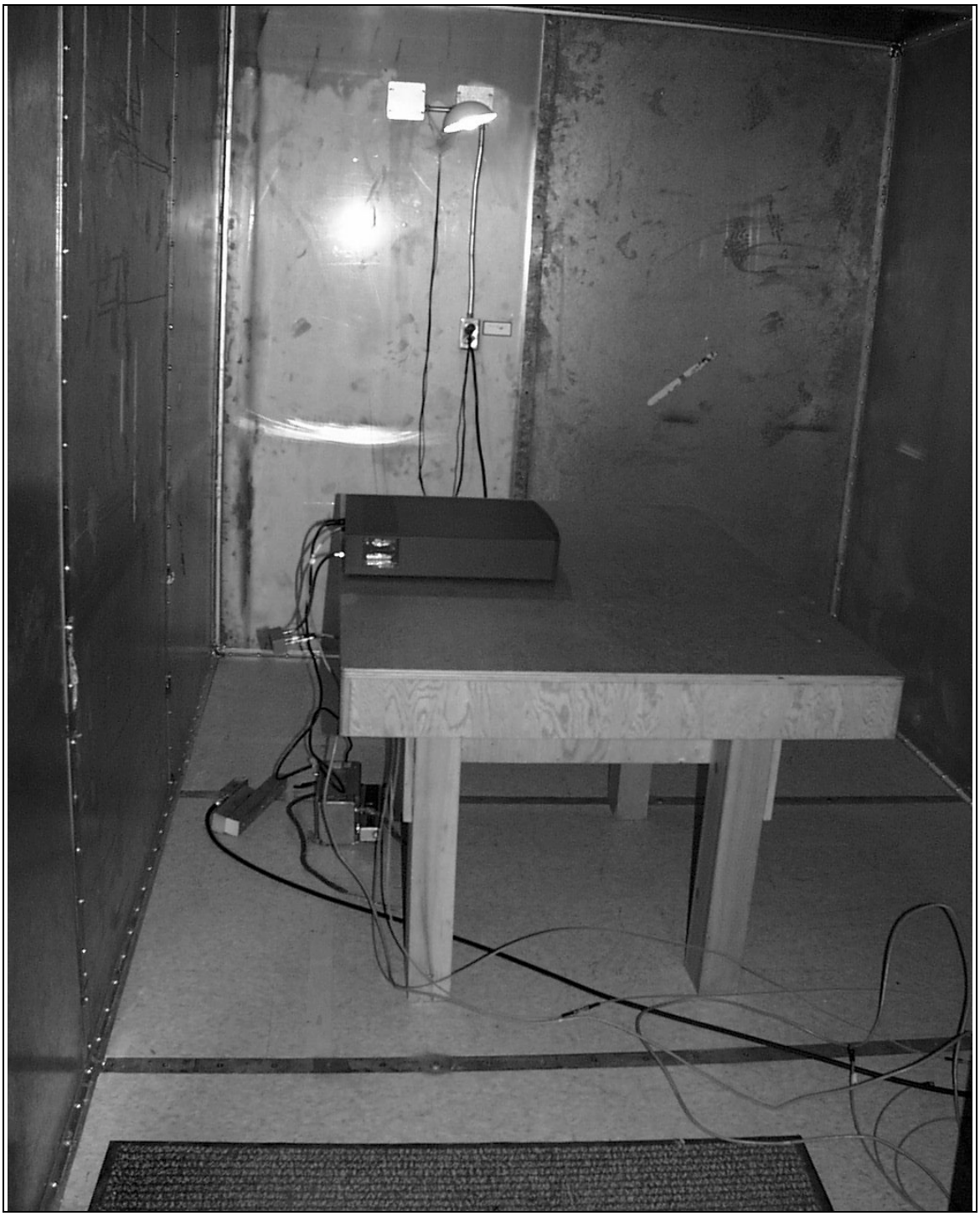

Figure 5-1 Conducted Emissions

This document contains Confidential Information of Newbridge Networks Corporation.

5.6 Operating and Environmental Conditions

Power Line Voltage	115 VAC
Power Line Frequency	60 Hz
Temperature	21.0 ˚C
Relative Humidity	25.0 %

This document contains Confidential Information of Newbridge Networks Corporation.

5.7 Test Equipment and Support Equipment

Instrument	Mftr./Model / S/N	Range	Calibration
Spectrum Analyzer	Hewlett Packard Model HP8566B S/N2816A16945	9 KHz to 22 GHz	Cal Date 24/07/98 Due Date 24/07/99
LISN	Solar Model 9252-50R-24BNC S/N 951316	50ohm, 50/250uH, 10KHz - 100MHz	Cal Date 22/07/98 Due Date 22/07/99
TCC Bert Tester	Fireberd Model 4000 S/N 6578	N/A	Cal Date 23/02/99 Due Date 23/02/00

5.8 Results - Test Data

See Penplots for results

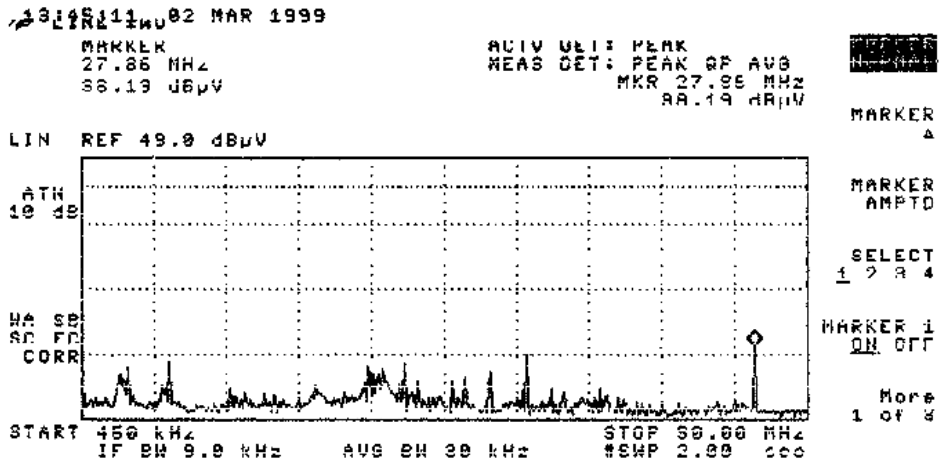
02 MAR 1999
MARKER
27.86 MHz
ACTV DET: PEAK
MEAS DET: PEAK QP AVG
MKR 27.86 MHz
LIN REF 49.0 dBµV
ATN
10 dB
MARKER
MARKER AMPTD
SELECT
1 2 3 4
MARKER 1
ON OFF
More
1 of 3
START 450 kHz
STOP 30.00 MHz
IF BW 9.0 kHz
AVG BW 30 kHz
#SWP 2.00

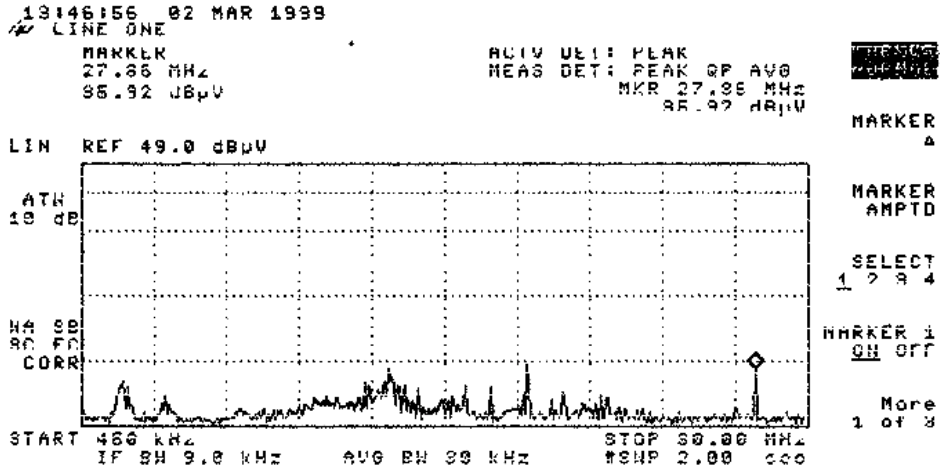
13:46:56 02 MAR 1999
LINE ONE
MARKER
27.86 MHz
ACTV DET: PEAK
MEAS DET: PEAK QP AVG
MKR 27.86 MHz
LIN REF 49.0 dBµV
ATN
10 dB
MARKER
MARKER AMPTD
SELECT
1 2 3 4
MARKER 1
ON OFF
More
1 of 3
START 450 kHz
STOP 30.00 MHz
IF BW 9.0 kHz
AVG BW 30 kHz
#SWP 2.00

REFERENCES

[1] ANSI, C62.41, IEEE Recommended Practice on Surge Voltages in Low Voltage AC Power Circuits, 1991.

[2] ANSI, C63.4, Methods of Measurement of Radio Noise Emissions from Low Voltage Electrical and Electronic Equipment in the Range of 9 kHz to 40 GHz, 1992.

[3] ANSI/IEEE C62.41, IEEE Recommended Practice on Surge Voltages in Low-Voltage AC Power Circuits, 1991.

[4] Bellcore**,** GR-1089-CORE Electromagnetic Compatibility and Electrical Safety Generic Criteria for Network Telecommunication Equipment, Issue 1, November 1994.

[5] Bellcore**,** GR-1089-ILR Revised and Additional Criteria for GR-1089-CORE, Issue 1A, JULY 1996.

[6] Bellcore, TR-NWT-000063 Network Equipment-Building System (NEBS) Generic Equipment Requirements, Issue 5, September 1993.

[7] Bellcore, TR-NWT-001089 Electromagnetic Compatibility and Electrical Safety Generic Criteria for Network Telecommunication Equipment, Issue 1, October, 1991.

[8] CEN/CENELEC, EN 45001 General criteria for the operation of testing laboratories , 1989.

[9] CENELEC, EN 50082-1, Electromagnetic compatibility - Generic immunity standard - Part 1 - Residential, commercial and light industry, 1991.

[10] CENELEC, EN 50082-2, Electromagnetic compatibility - Generic immunity standard - Part 2 - Industrial environment, 1994.

[11] CENELEC, EN 55022, Limits and methods of measurement of radio disturbance characteristics of information technology equipment, 1994.

[12] CENELEC, EN 61000-3-2, Electromagnetic compatibility (EMC) Part 3: Limits Section 2: Limits for harmonic current emissions (equipment input current ≤ 16A per phase (IEC 1000-3-2:1995) 1995.

[13] CENELEC, EN 61000-3-3, Electromagnetic compatibility (EMC) Part 3: Limits Section 23 Limits for voltage fluctuations and flicker in low-voltage supply systems for equipment with rated current ≤ 16 A (IEC 1000-3-3:1994) 1995.

[14] CISPR 16, CISPR Specifications for Radio Interference Measuring Apparatus and Measurement Methods, 2nd ed., 1987.

[15] CISPR 22, Limits and methods of measurement of radio disturbance characteristics of information technology equipment, 1993.

[16] FCC, 47 CFR Part 15 Radio Frequency Devices, 1995

[17] FCC, 47 CFR Part 68 Connection of Terminal Equipment to the Telephone Network, 1995

[18] IEC, 801-2 Electromagnetic compatibility for industrial process and control equipment, Part 2: Electrostatic Discharge requirements, First Edition, 1984.

[19] IEC, 801-2, Electromagnetic compatibility for industrial process and control equipment, Part 2: Electrostatic Discharge requirements, Second Edition, 1991.

[20] IEC, 801-3, Electromagnetic compatibility for electrical and electronic equipment, Part 3: Immunity to radiated, radio frequency, electromagnetic fields, 1984.

[21] IEC, 801-4, Electromagnetic compatibility for industrial process and control equipment, Part 4: Electrical fast transient/burst requirements, First Edition 1988.

[22] IEC, 1000-4-2, Electromagnetic Compatibility (EMC), Part:4: Testing and measurement techniques - Section 2: Electrostatic discharge immunity test, First Edition, 1995-01.

[23] IEC, 1000-4-4, Electromagnetic Compatibility (EMC), Part:4: Testing and measurement techniques - Section 4: Electrical fast transient/ burst immunity test, First Edition, 1995-01.

[24] Industry Canada, ICES-003 Interference-Causing Equipment Standard DIGITAL APPARATUS, Issue 2, Revision 1, 1995.

[25] ISO, GUIDE 25 General requirements for the competence of calibration and testing laboratories, Third Edition, 1990.

[26] Newbridge internal document HQP0009, Regulatory Approvals Overview, D. Moncion.

This document contains Confidential Information of Newbridge Networks Corporation.

HISTORY

This document was created from the document template GQP0001, version 8.2.

Version	Date	Person	Reason
1.0	99.03.05	G. Sinfield	Issued

This document contains Confidential Information of Newbridge Networks Corporation.