SAR vs duty cycle

f (MHz)	Ch. No.	Modulation	Data Rate (Mbps)	Duty Cycle (%)	Output Power (dBm)	SW Power Setting	Measured 1-g SAR (W/kg)	100% 1-g SAR (W/kg)
2412	1	BPSK	6	64.4	15.45	21	0.548	0.549
2412	1	QPSK	12	68.75	15.45	21	0.548	0.549
2412	1	16-QAM	24	35.81	15.40	43	0.523	0.527
2412	1	64-QAM	48	21.67	15.90	65	0.488	0.496
2412	1	64-QAM	54	18.75	15.30	65	0.428	0.435

Test Laboratory: Compliance Certification Services

Host # 1 IBM Laptop

DUT: Buffalo; Type: WLI-CB-G54HP; Serial: N/A

Communication System: 802.11bg; Frequency: 2412 MHz;Duty Cycle: 1:1
Medium parameters used (interpolated): f = 2412 MHz; σ = 1.93 mho/m; ε_r = 52.3; ρ = 1000 kg/m^3
Phantom section: Flat Section

Room Ambient Temperature: 24 deg. C; Liquid Temperature: 23 deg. C

DASY4 Configuration:
- Area Scan setting - Find Secondary Maximum Within: 2.0 dB and with a peak SAR value greater than 0.0012W/kg
- Probe: EX3DV4 - SN3552 ; ConvF(6.94, 6.94, 6.94); Calibrated: 3/19/2005
- Sensor-Surface: 2.5mm (Mechanical Surface Detection)
- Electronics: DAE3 Sn500; Calibrated: 2/7/2005
- Phantom: SAM 2; Type: SAM 2; Serial: 1050
- Measurement SW: DASY4, V4.5 Build 19; Postprocessing SW: SEMCAD, V1.8 Build 146

G mode, Data Rate: 6 Mbps/Area Scan (7x7x1): Measurement grid: dx=15mm, dy=15mm

Info: Interpolated medium parameters used for SAR evaluation!
Maximum value of SAR (measured) = 0.665 mW/g

G mode, Data Rate: 6 Mbps/Zoom Scan (5x5x7)/Cube 0: Measurement grid: dx=7.5mm, dy=7.5mm, dz=5mm

Reference Value = 10.1 V/m; Power Drift = -0.188 dB
Peak SAR (extrapolated) = 0.910 W/kg
SAR(1 g) = 0.548 mW/g; SAR(10 g) = 0.310 mW/g

Info: Interpolated medium parameters used for SAR evaluation!
Maximum value of SAR (measured) = 0.700 mW/g

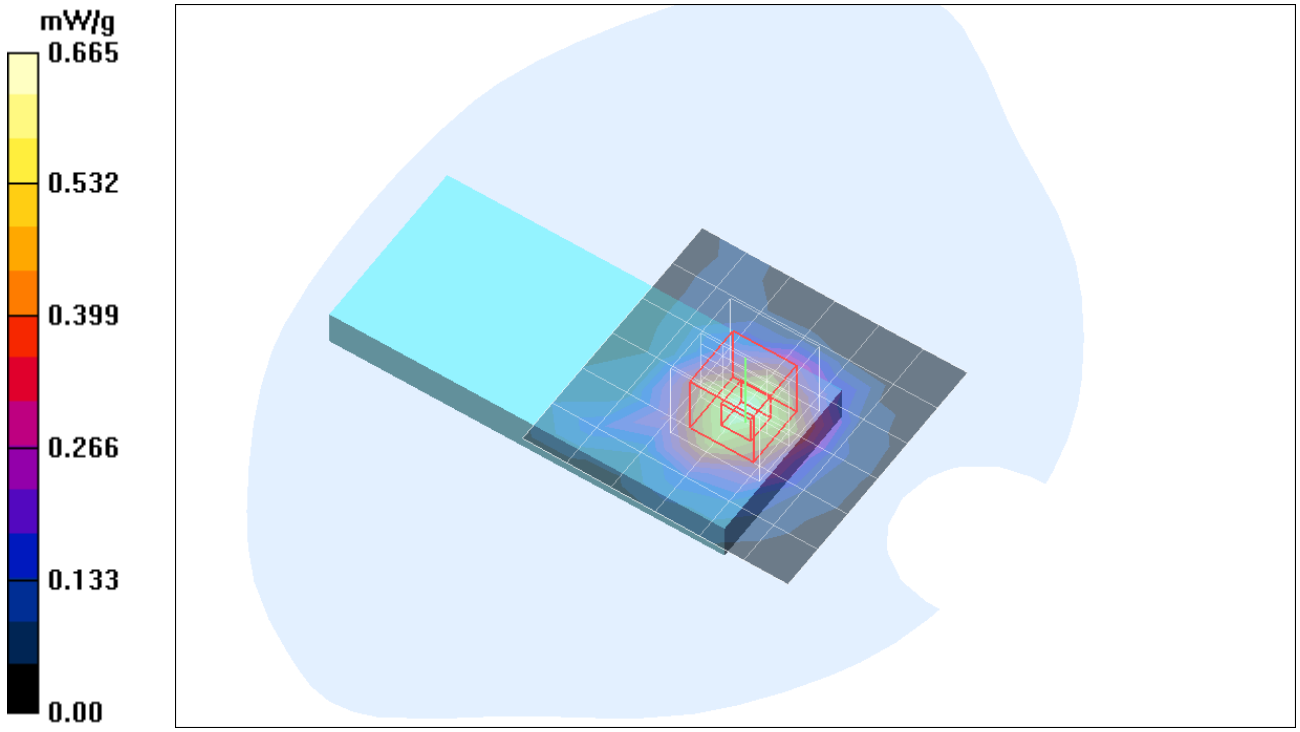

Test Laboratory: Compliance Certification Services

Host # 1 IBM Laptop

DUT: Buffalo; Type: WLI-CB-G54HP; Serial: N/A

Communication System: 802.11bg; Frequency: 2412 MHz;Duty Cycle: 1:1.55
Medium parameters used (interpolated): f = 2412 MHz; σ = 1.93 mho/m; ε_r = 52.3; ρ = 1000 kg/m^3
Phantom section: Flat Section

Room Ambient Temperature: 24 deg. C; Liquid Temperature: 23 deg. C

DASY4 Configuration:
- Area Scan setting - Find Secondary Maximum Within: 2.0 dB and with a peak SAR value greater than 0.0012W/kg
- Probe: EX3DV4 - SN3552 ; ConvF(6.94, 6.94, 6.94); Calibrated: 3/19/2005
- Sensor-Surface: 2.5mm (Mechanical Surface Detection)
- Electronics: DAE3 Sn500; Calibrated: 2/7/2005
- Phantom: SAM 2; Type: SAM 2; Serial: 1050
- Measurement SW: DASY4, V4.5 Build 19; Postprocessing SW: SEMCAD, V1.8 Build 146

G mode, Data Rate: 6 Mbps/Area Scan (7x7x1): Measurement grid: dx=15mm, dy=15mm

Info: Interpolated medium parameters used for SAR evaluation!
Maximum value of SAR (measured) = 0.667 mW/g

G mode, Data Rate: 6 Mbps/Zoom Scan (5x5x7)/Cube 0: Measurement grid: dx=7.5mm, dy=7.5mm, dz=5mm

Reference Value = 10.1 V/m; Power Drift = -0.189 dB
Peak SAR (extrapolated) = 0.913 W/kg
SAR(1 g) = 0.549 mW/g; SAR(10 g) = 0.310 mW/g

Info: Interpolated medium parameters used for SAR evaluation!
Maximum value of SAR (measured) = 0.702 mW/g

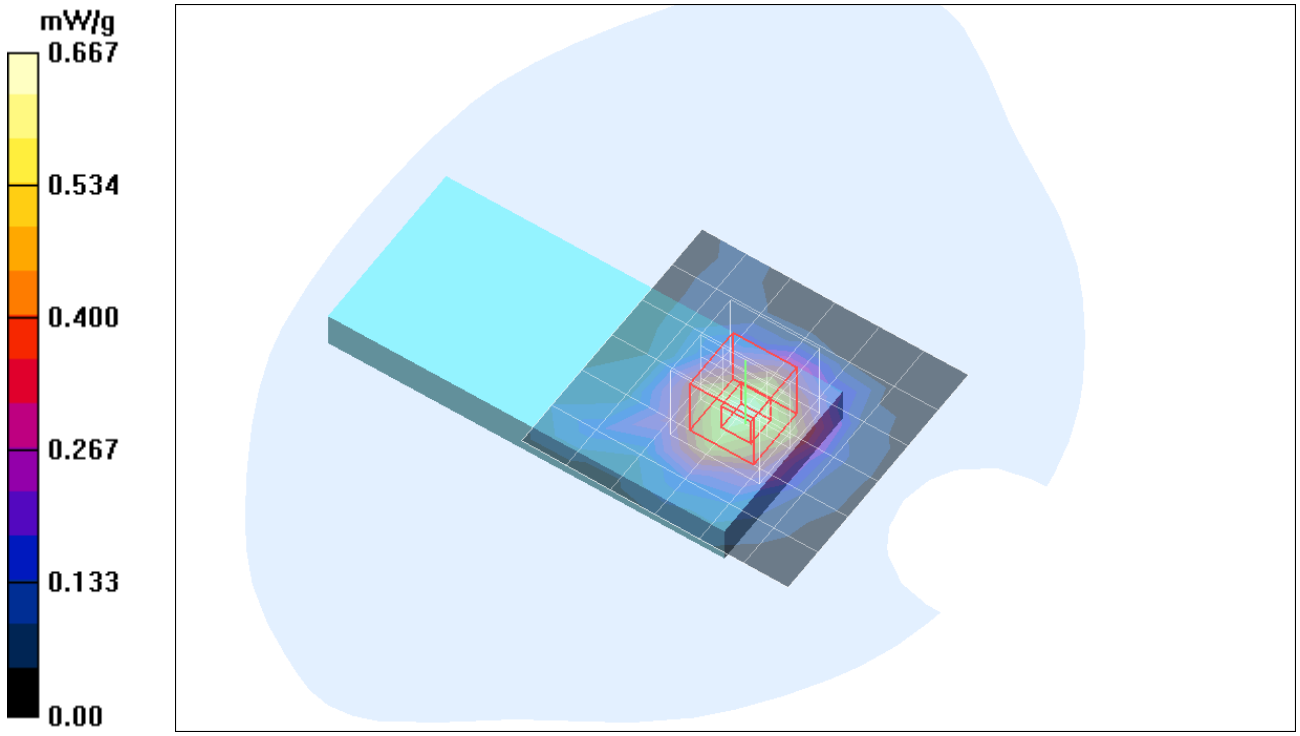

Test Laboratory: Compliance Certification Services

Host # 1 IBM Laptop

DUT: Buffalo; Type: WLI-CB-G54HP; Serial: N/A

Communication System: 802.11bg; Frequency: 2412 MHz;Duty Cycle: 1:1
Medium parameters used (interpolated): f = 2412 MHz; σ = 1.93 mho/m; ε_r = 52.3; ρ = 1000 kg/m^3
Phantom section: Flat Section

Room Ambient Temperature: 24 deg. C; Liquid Temperature: 23 deg. C

DASY4 Configuration:
- Area Scan setting - Find Secondary Maximum Within: 2.0 dB and with a peak SAR value greater than 0.0012W/kg
- Probe: EX3DV4 - SN3552 ; ConvF(6.94, 6.94, 6.94); Calibrated: 3/19/2005
- Sensor-Surface: 2.5mm (Mechanical Surface Detection)
- Electronics: DAE3 Sn500; Calibrated: 2/7/2005
- Phantom: SAM 2; Type: SAM 2; Serial: 1050
- Measurement SW: DASY4, V4.5 Build 19; Postprocessing SW: SEMCAD, V1.8 Build 146

G mode, Data Rate: 12 Mbps/Area Scan (7x7x1): Measurement grid: dx=15mm, dy=15mm

Info: Interpolated medium parameters used for SAR evaluation!
Maximum value of SAR (measured) = 0.600 mW/g

G mode, Data Rate: 12 Mbps/Zoom Scan (5x5x7)/Cube 0: Measurement grid: dx=7.5mm, dy=7.5mm, dz=5mm

Reference Value = 9.94 V/m; Power Drift = -0.142 dB
Peak SAR (extrapolated) = 0.908 W/kg
SAR(1 g) = 0.548 mW/g; SAR(10 g) = 0.310 mW/g

Info: Interpolated medium parameters used for SAR evaluation!
Maximum value of SAR (measured) = 0.705 mW/g

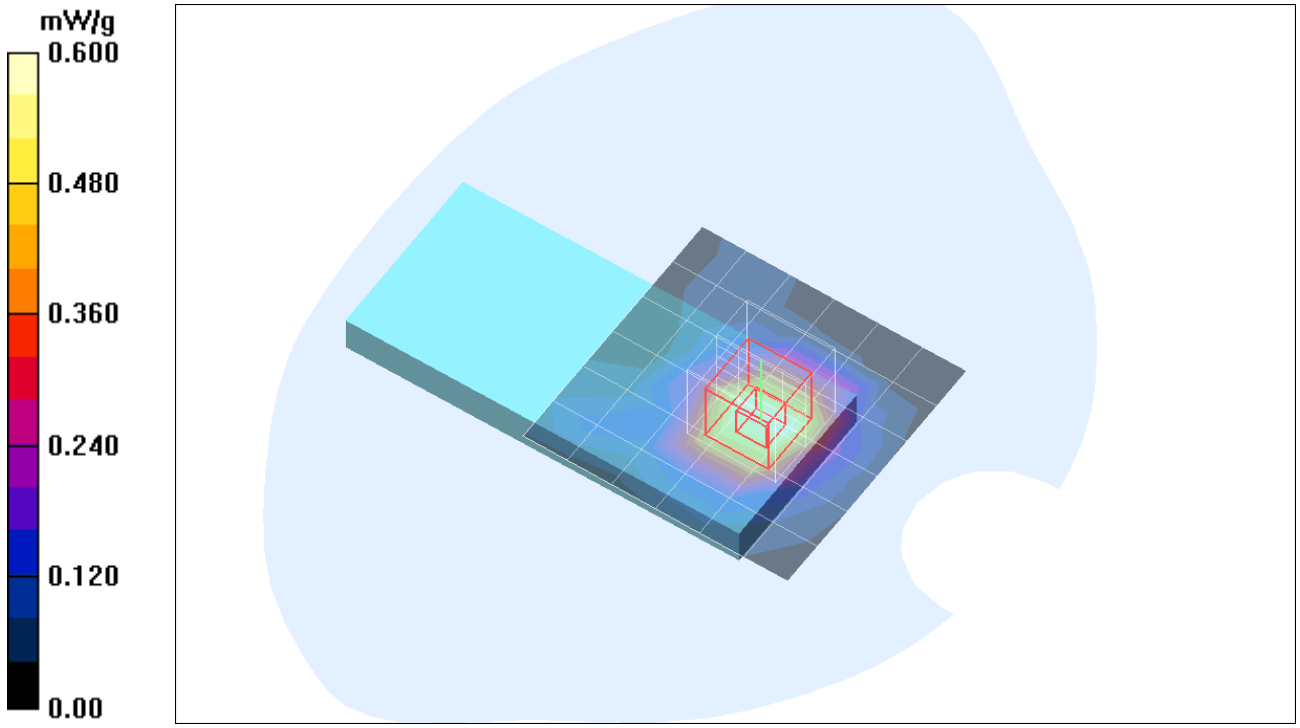

Test Laboratory: Compliance Certification Services

Host # 1 IBM Laptop

DUT: Buffalo; Type: WLI-CB-G54HP; Serial: N/A

Communication System: 802.11bg; Frequency: 2412 MHz;Duty Cycle: 1:1.46
Medium parameters used (interpolated): f = 2412 MHz; σ = 1.93 mho/m; ε_r = 52.3; ρ = 1000 kg/m^3
Phantom section: Flat Section

Room Ambient Temperature: 24 deg. C; Liquid Temperature: 23 deg. C

DASY4 Configuration:
- Area Scan setting - Find Secondary Maximum Within: 2.0 dB and with a peak SAR value greater than 0.0012W/kg
- Probe: EX3DV4 - SN3552 ; ConvF(6.94, 6.94, 6.94); Calibrated: 3/19/2005
- Sensor-Surface: 2.5mm (Mechanical Surface Detection)
- Electronics: DAE3 Sn500; Calibrated: 2/7/2005
- Phantom: SAM 2; Type: SAM 2; Serial: 1050
- Measurement SW: DASY4, V4.5 Build 19; Postprocessing SW: SEMCAD, V1.8 Build 146

G mode, Data Rate: 12 Mbps/Area Scan (7x7x1): Measurement grid: dx=15mm, dy=15mm

Info: Interpolated medium parameters used for SAR evaluation!
Maximum value of SAR (measured) = 0.601 mW/g

G mode, Data Rate: 12 Mbps/Zoom Scan (5x5x7)/Cube 0: Measurement grid: dx=7.5mm, dy=7.5mm, dz=5mm

Reference Value = 9.95 V/m; Power Drift = -0.142 dB
Peak SAR (extrapolated) = 0.911 W/kg
SAR(1 g) = 0.549 mW/g; SAR(10 g) = 0.311 mW/g

Info: Interpolated medium parameters used for SAR evaluation!
Maximum value of SAR (measured) = 0.707 mW/g

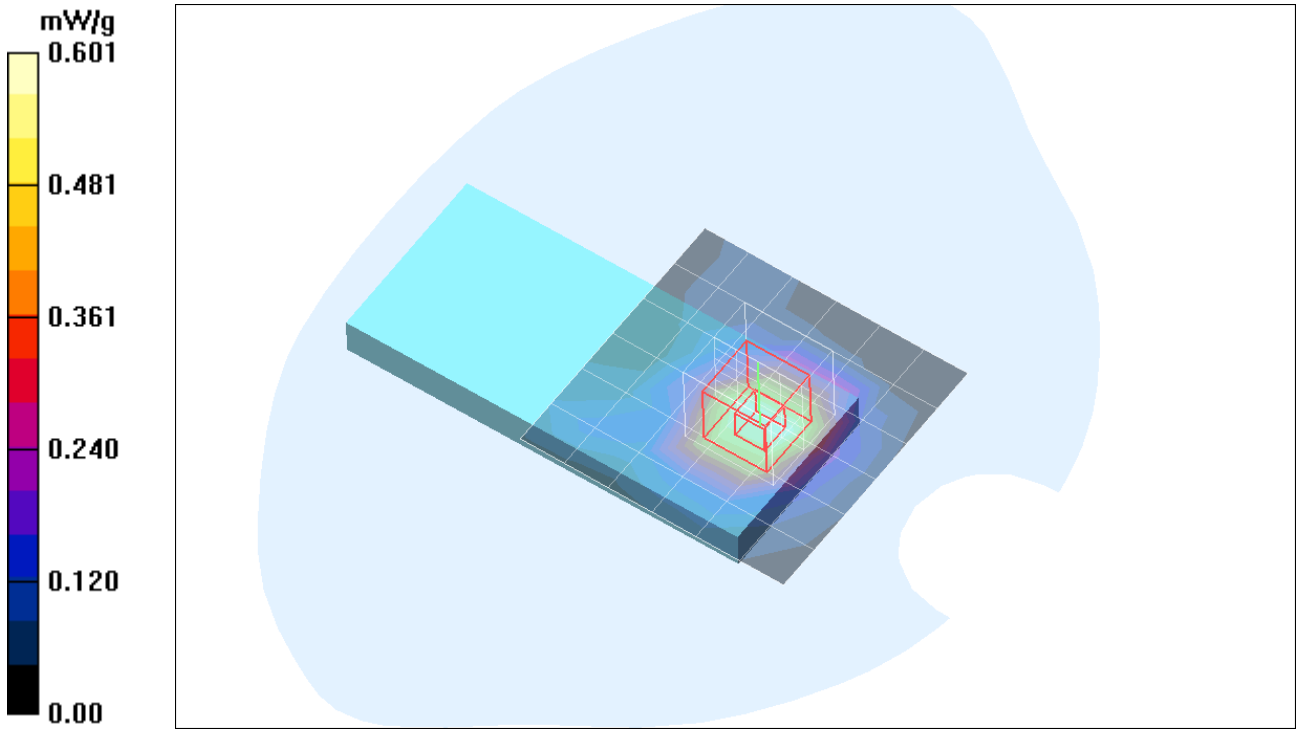

Test Laboratory: Compliance Certification Services

Host # 1 IBM Laptop

DUT: Buffalo; Type: WLI-CB-G54HP; Serial: N/A

Communication System: 802.11bg; Frequency: 2412 MHz;Duty Cycle: 1:1
Medium parameters used (interpolated): f = 2412 MHz; σ = 1.93 mho/m; ε_r = 52.3; ρ = 1000 kg/m^3
Phantom section: Flat Section

Room Ambient Temperature: 24 deg. C; Liquid Temperature: 23 deg. C

DASY4 Configuration:
- Area Scan setting - Find Secondary Maximum Within: 2.0 dB and with a peak SAR value greater than 0.0012W/kg
- Probe: EX3DV4 - SN3552 ; ConvF(6.94, 6.94, 6.94); Calibrated: 3/19/2005
- Sensor-Surface: 2.5mm (Mechanical Surface Detection)
- Electronics: DAE3 Sn500; Calibrated: 2/7/2005
- Phantom: SAM 2; Type: SAM 2; Serial: 1050
- Measurement SW: DASY4, V4.5 Build 19; Postprocessing SW: SEMCAD, V1.8 Build 146

G mode, Data Rate: 24 Mbps/Area Scan (7x7x1): Measurement grid: dx=15mm, dy=15mm

Info: Interpolated medium parameters used for SAR evaluation!
Maximum value of SAR (measured) = 0.589 mW/g

G mode, Data Rate: 24 Mbps/Zoom Scan (5x5x7)/Cube 0: Measurement grid: dx=7.5mm, dy=7.5mm, dz=5mm

Reference Value = 9.94 V/m; Power Drift = -0.105 dB
Peak SAR (extrapolated) = 0.872 W/kg
SAR(1 g) = 0.523 mW/g; SAR(10 g) = 0.298 mW/g

Info: Interpolated medium parameters used for SAR evaluation!
Maximum value of SAR (measured) = 0.668 mW/g

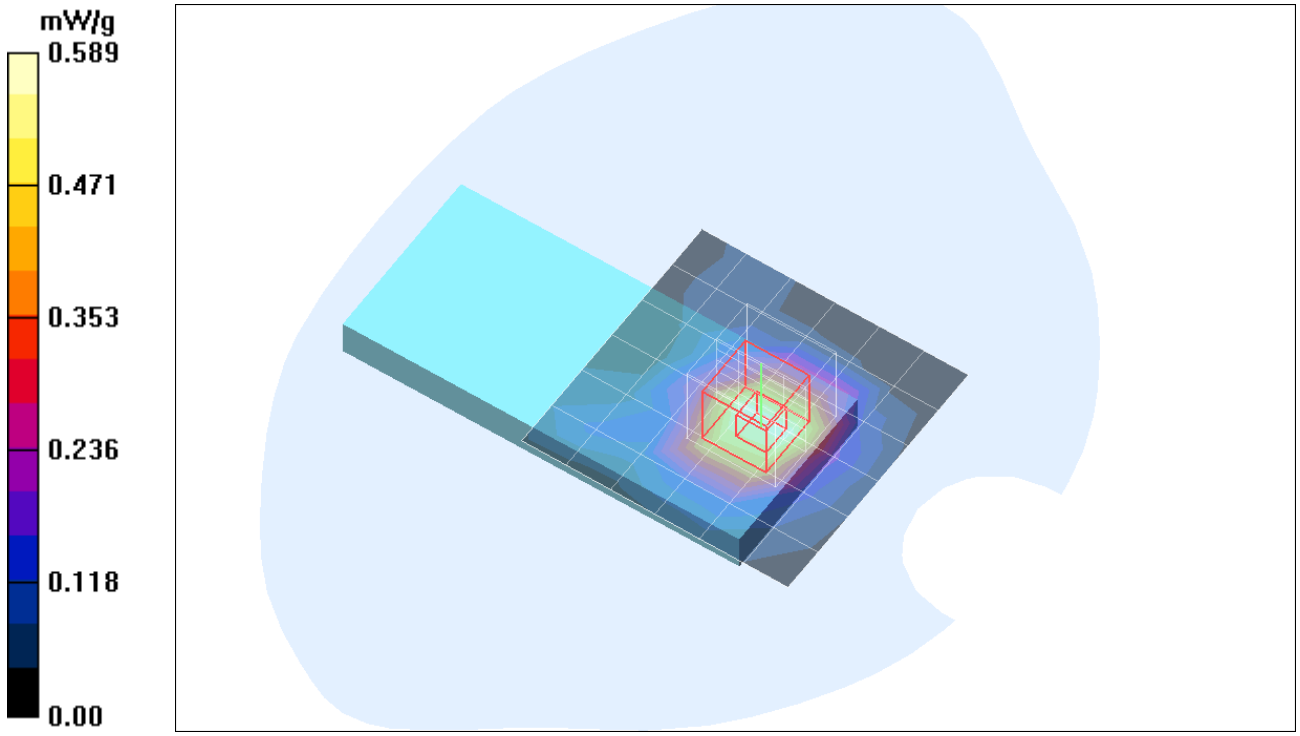

Test Laboratory: Compliance Certification Services

Host # 1 IBM Laptop

DUT: Buffalo; Type: WLI-CB-G54HP; Serial: N/A

Communication System: 802.11bg; Frequency: 2412 MHz;Duty Cycle: 1:2.79
Medium parameters used (interpolated): f = 2412 MHz; σ = 1.93 mho/m; ε_r = 52.3; ρ = 1000 kg/m^3
Phantom section: Flat Section

Room Ambient Temperature: 24 deg. C; Liquid Temperature: 23 deg. C

DASY4 Configuration:
- Area Scan setting - Find Secondary Maximum Within: 2.0 dB and with a peak SAR value greater than 0.0012W/kg
- Probe: EX3DV4 - SN3552 ; ConvF(6.94, 6.94, 6.94); Calibrated: 3/19/2005
- Sensor-Surface: 2.5mm (Mechanical Surface Detection)
- Electronics: DAE3 Sn500; Calibrated: 2/7/2005
- Phantom: SAM 2; Type: SAM 2; Serial: 1050
- Measurement SW: DASY4, V4.5 Build 19; Postprocessing SW: SEMCAD, V1.8 Build 146

G mode, Data Rate: 24 Mbps/Area Scan (7x7x1): Measurement grid: dx=15mm, dy=15mm

Info: Interpolated medium parameters used for SAR evaluation!
Maximum value of SAR (measured) = 0.594 mW/g

G mode, Data Rate: 24 Mbps/Zoom Scan (5x5x7)/Cube 0: Measurement grid: dx=7.5mm, dy=7.5mm, dz=5mm

Reference Value = 9.95 V/m; Power Drift = -0.106 dB
Peak SAR (extrapolated) = 0.883 W/kg
SAR(1 g) = 0.527 mW/g; SAR(10 g) = 0.300 mW/g

Info: Interpolated medium parameters used for SAR evaluation!
Maximum value of SAR (measured) = 0.674 mW/g

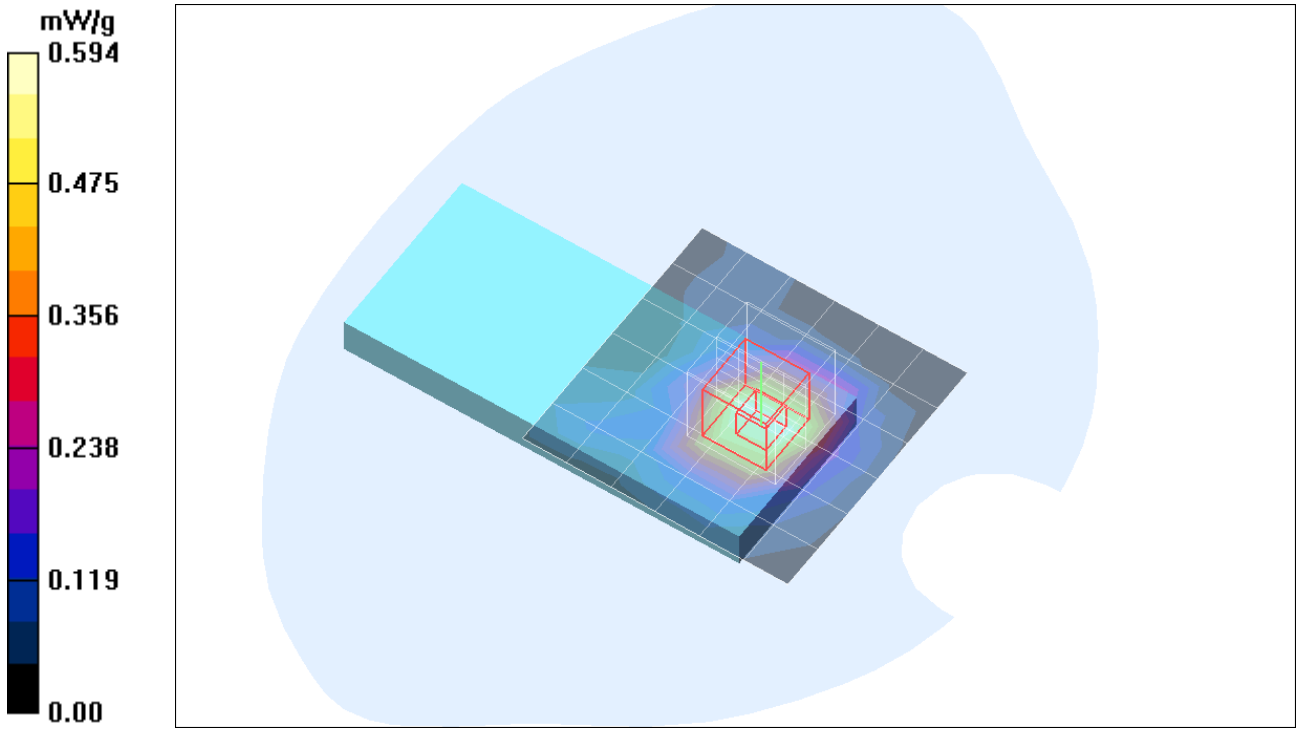

Test Laboratory: Compliance Certification Services

Host # 1 IBM Laptop

DUT: Buffalo; Type: WLI-CB-G54HP; Serial: N/A

Communication System: 802.11bg; Frequency: 2412 MHz;Duty Cycle: 1:1
Medium parameters used (interpolated): f = 2412 MHz; σ = 1.93 mho/m; ε_r = 52.3; ρ = 1000 kg/m^3
Phantom section: Flat Section

Room Ambient Temperature: 24 deg. C; Liquid Temperature: 23 deg. C

DASY4 Configuration:
- Area Scan setting - Find Secondary Maximum Within: 2.0 dB and with a peak SAR value greater than 0.0012W/kg
- Probe: EX3DV4 - SN3552 ; ConvF(6.94, 6.94, 6.94); Calibrated: 3/19/2005
- Sensor-Surface: 2.5mm (Mechanical Surface Detection)
- Electronics: DAE3 Sn500; Calibrated: 2/7/2005
- Phantom: SAM 2; Type: SAM 2; Serial: 1050
- Measurement SW: DASY4, V4.5 Build 19; Postprocessing SW: SEMCAD, V1.8 Build 146

G mode, Data Rate: 48 Mbps/Area Scan (7x7x1): Measurement grid: dx=15mm, dy=15mm

Info: Interpolated medium parameters used for SAR evaluation!
Maximum value of SAR (measured) = 0.540 mW/g

G mode, Data Rate: 48 Mbps/Zoom Scan (5x5x7)/Cube 0: Measurement grid: dx=7.5mm, dy=7.5mm, dz=5mm

Reference Value = 9.61 V/m; Power Drift = -0.157 dB
Peak SAR (extrapolated) = 0.866 W/kg
SAR(1 g) = 0.488 mW/g; SAR(10 g) = 0.277 mW/g

Info: Interpolated medium parameters used for SAR evaluation!
Maximum value of SAR (measured) = 0.619 mW/g

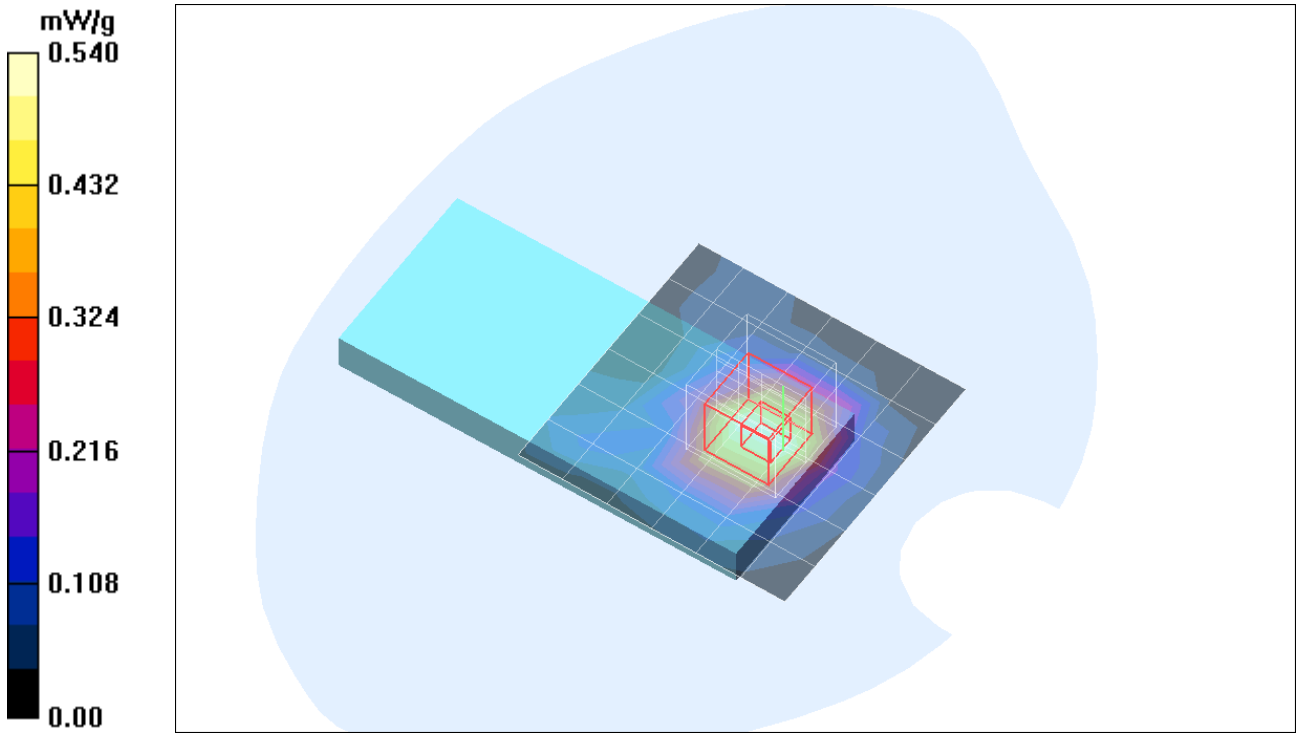

Test Laboratory: Compliance Certification Services

Host # 1 IBM Laptop

DUT: Buffalo; Type: WLI-CB-G54HP; Serial: N/A

Communication System: 802.11bg; Frequency: 2412 MHz;Duty Cycle: 1:4.62
Medium parameters used (interpolated): f = 2412 MHz; σ = 1.93 mho/m; ε_r = 52.3; ρ = 1000 kg/m^3
Phantom section: Flat Section

Room Ambient Temperature: 24 deg. C; Liquid Temperature: 23 deg. C

DASY4 Configuration:
- Area Scan setting - Find Secondary Maximum Within: 2.0 dB and with a peak SAR value greater than 0.0012W/kg
- Probe: EX3DV4 - SN3552 ; ConvF(6.94, 6.94, 6.94); Calibrated: 3/19/2005
- Sensor-Surface: 2.5mm (Mechanical Surface Detection)
- Electronics: DAE3 Sn500; Calibrated: 2/7/2005
- Phantom: SAM 2; Type: SAM 2; Serial: 1050
- Measurement SW: DASY4, V4.5 Build 19; Postprocessing SW: SEMCAD, V1.8 Build 146

G mode, Data Rate: 48 Mbps/Area Scan (7x7x1): Measurement grid: dx=15mm, dy=15mm

Info: Interpolated medium parameters used for SAR evaluation!
Maximum value of SAR (measured) = 0.549 mW/g

G mode, Data Rate: 48 Mbps/Zoom Scan (5x5x7)/Cube 0: Measurement grid: dx=7.5mm, dy=7.5mm, dz=5mm

Reference Value = 9.63 V/m; Power Drift = -0.159 dB
Peak SAR (extrapolated) = 0.887 W/kg
SAR(1 g) = 0.496 mW/g; SAR(10 g) = 0.280 mW/g

Info: Interpolated medium parameters used for SAR evaluation!
Maximum value of SAR (measured) = 0.630 mW/g

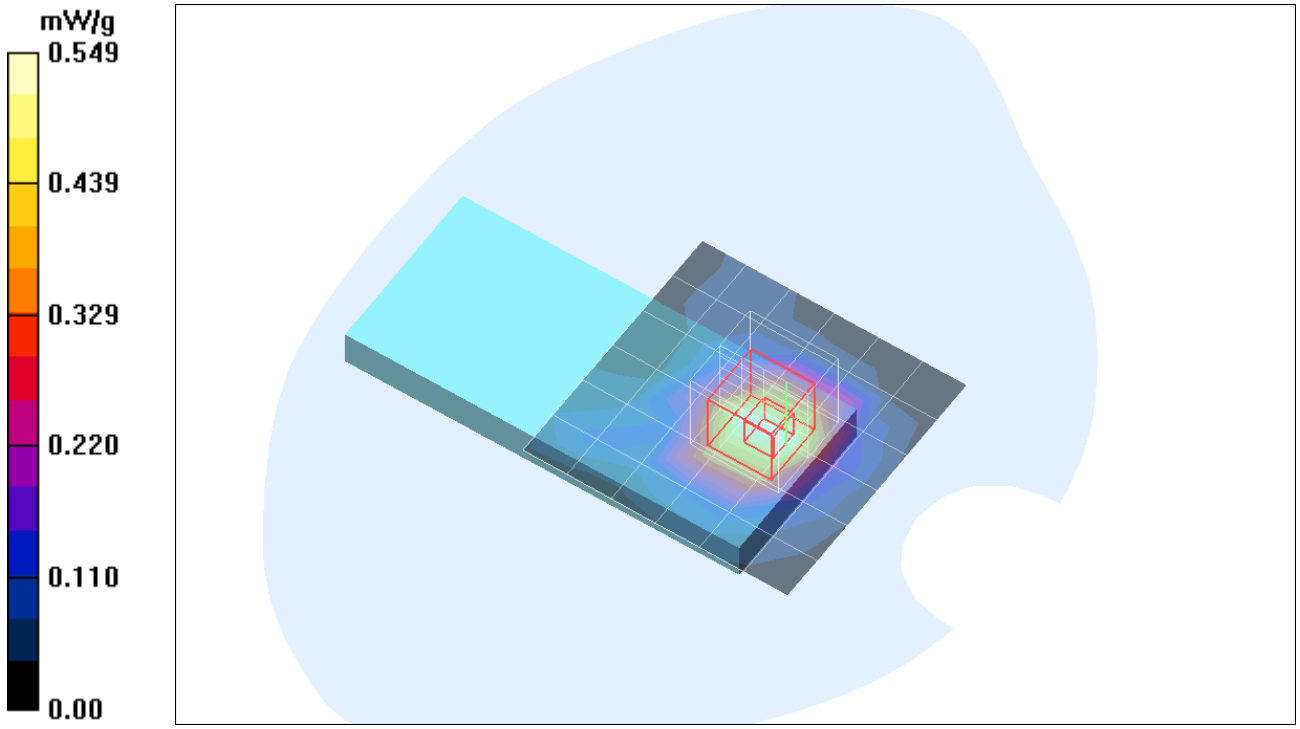

Test Laboratory: Compliance Certification Services

Host # 1 IBM Laptop

DUT: Buffalo; Type: WLI-CB-G54HP; Serial: N/A

Communication System: 802.11bg; Frequency: 2412 MHz;Duty Cycle: 1:1
Medium parameters used (interpolated): f = 2412 MHz; σ = 1.93 mho/m; ε_r = 52.3; ρ = 1000 kg/m^3
Phantom section: Flat Section

Room Ambient Temperature: 24 deg. C; Liquid Temperature: 23 deg. C

DASY4 Configuration:
- Area Scan setting - Find Secondary Maximum Within: 2.0 dB and with a peak SAR value greater than 0.0012W/kg
- Probe: EX3DV4 - SN3552 ; ConvF(6.94, 6.94, 6.94); Calibrated: 3/19/2005
- Sensor-Surface: 2.5mm (Mechanical Surface Detection)
- Electronics: DAE3 Sn500; Calibrated: 2/7/2005
- Phantom: SAM 2; Type: SAM 2; Serial: 1050
- Measurement SW: DASY4, V4.5 Build 19; Postprocessing SW: SEMCAD, V1.8 Build 146

G mode, Data Rate: 54 Mbps/Area Scan (7x7x1): Measurement grid: dx=15mm, dy=15mm

Info: Interpolated medium parameters used for SAR evaluation!
Maximum value of SAR (measured) = 0.524 mW/g

G mode, Data Rate: 54 Mbps/Zoom Scan (5x5x7)/Cube 0: Measurement grid: dx=7.5mm, dy=7.5mm, dz=5mm

Reference Value = 8.78 V/m; Power Drift = -0.141 dB
Peak SAR (extrapolated) = 0.686 W/kg
SAR(1 g) = 0.428 mW/g; SAR(10 g) = 0.245 mW/g

Info: Interpolated medium parameters used for SAR evaluation!
Maximum value of SAR (measured) = 0.541 mW/g

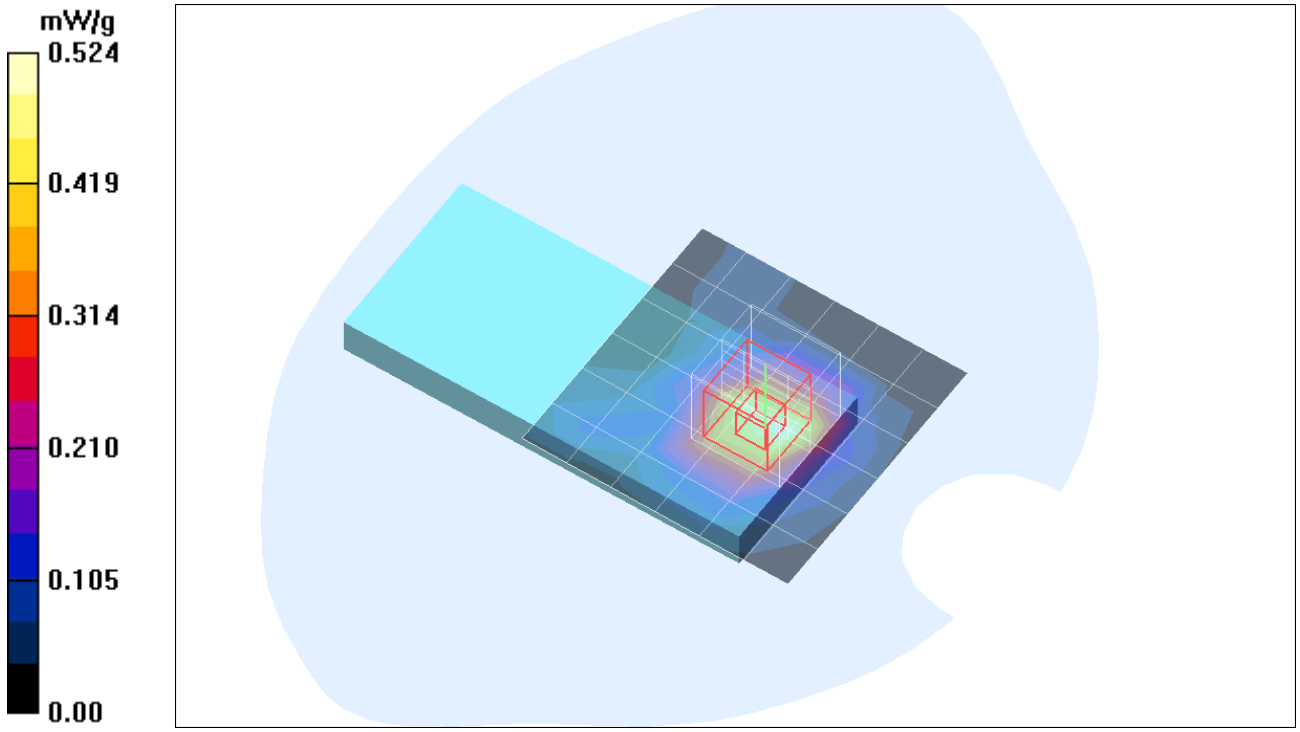

Test Laboratory: Compliance Certification Services

Host # 1 IBM Laptop

DUT: Buffalo; Type: WLI-CB-G54HP; Serial: N/A

Communication System: 802.11bg; Frequency: 2412 MHz;Duty Cycle: 1:5.33
Medium parameters used (interpolated): f = 2412 MHz; σ = 1.93 mho/m; ε_r = 52.3; ρ = 1000 kg/m^3
Phantom section: Flat Section

Room Ambient Temperature: 24 deg. C; Liquid Temperature: 23 deg. C

DASY4 Configuration:
- Area Scan setting - Find Secondary Maximum Within: 2.0 dB and with a peak SAR value greater than 0.0012W/kg
- Probe: EX3DV4 - SN3552 ; ConvF(6.94, 6.94, 6.94); Calibrated: 3/19/2005
- Sensor-Surface: 2.5mm (Mechanical Surface Detection)
- Electronics: DAE3 Sn500; Calibrated: 2/7/2005
- Phantom: SAM 2; Type: SAM 2; Serial: 1050
- Measurement SW: DASY4, V4.5 Build 19; Postprocessing SW: SEMCAD, V1.8 Build 146

G mode, Data Rate: 54 Mbps/Area Scan (7x7x1): Measurement grid: dx=15mm, dy=15mm

Info: Interpolated medium parameters used for SAR evaluation!
Maximum value of SAR (measured) = 0.533 mW/g

G mode, Data Rate: 54 Mbps/Zoom Scan (5x5x7)/Cube 0: Measurement grid: dx=7.5mm, dy=7.5mm, dz=5mm

Reference Value = 8.80 V/m; Power Drift = -0.143 dB
Peak SAR (extrapolated) = 0.703 W/kg
SAR(1 g) = 0.435 mW/g; SAR(10 g) = 0.248 mW/g

Info: Interpolated medium parameters used for SAR evaluation!
Maximum value of SAR (measured) = 0.551 mW/g

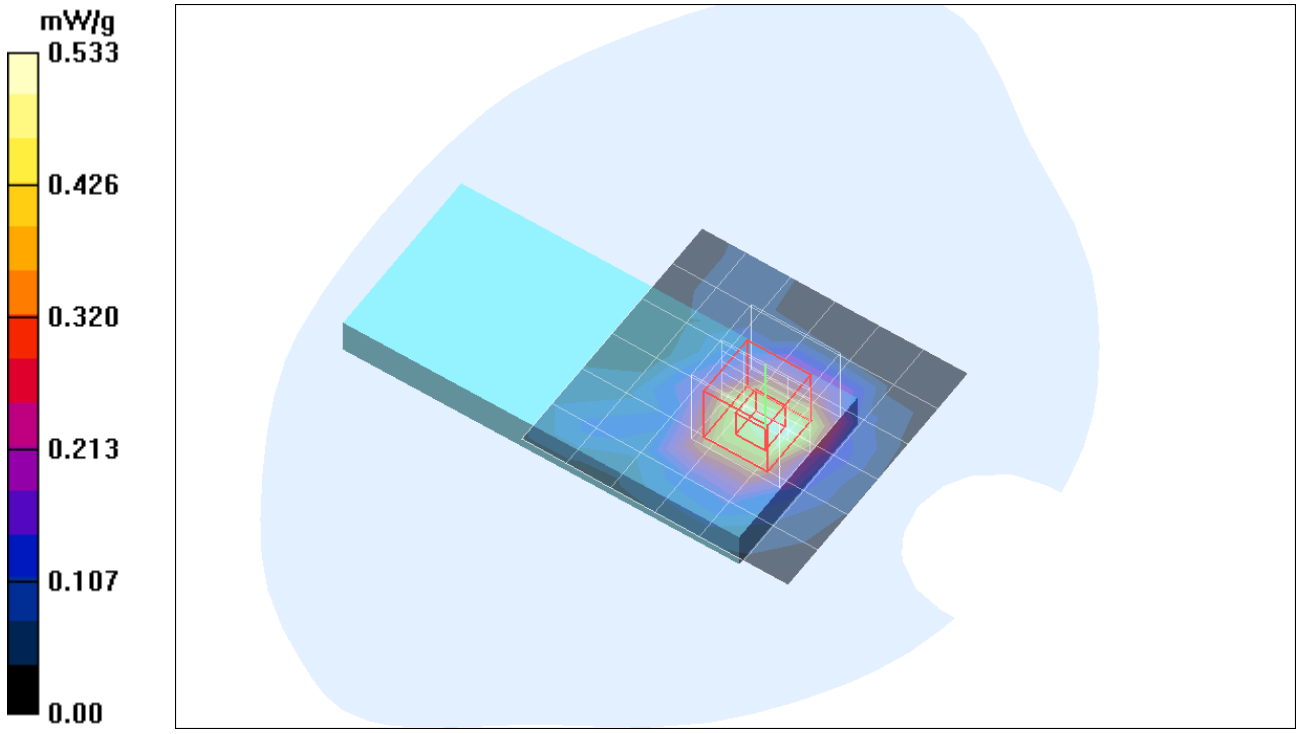

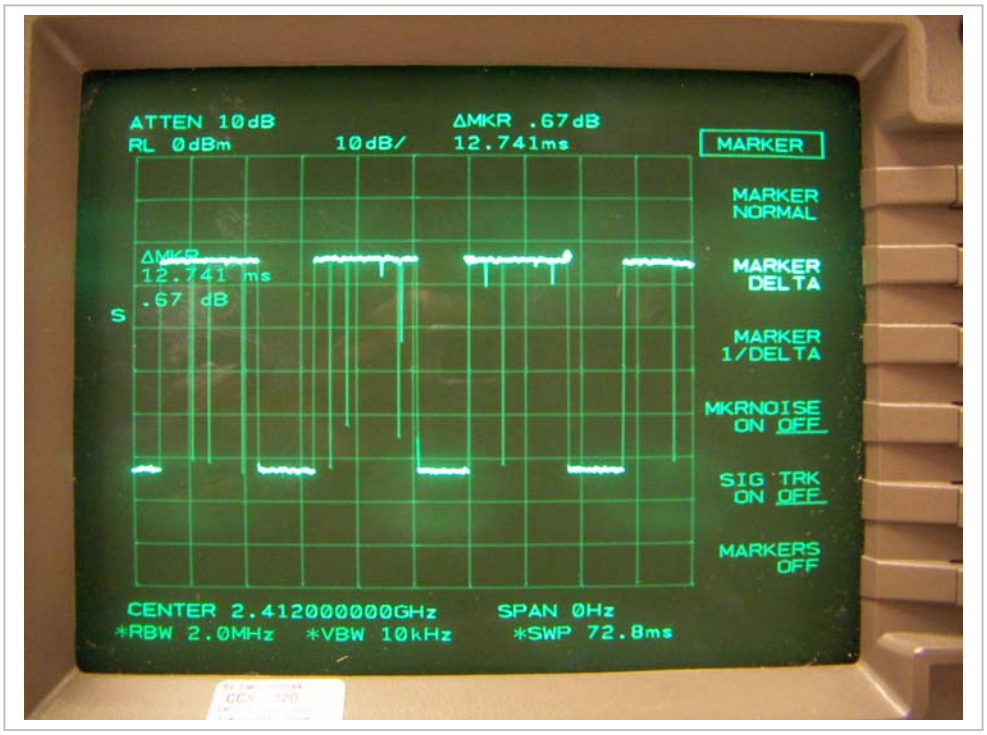

Ch 2412 Data Rate 6M bps ON Time 12.74 ms

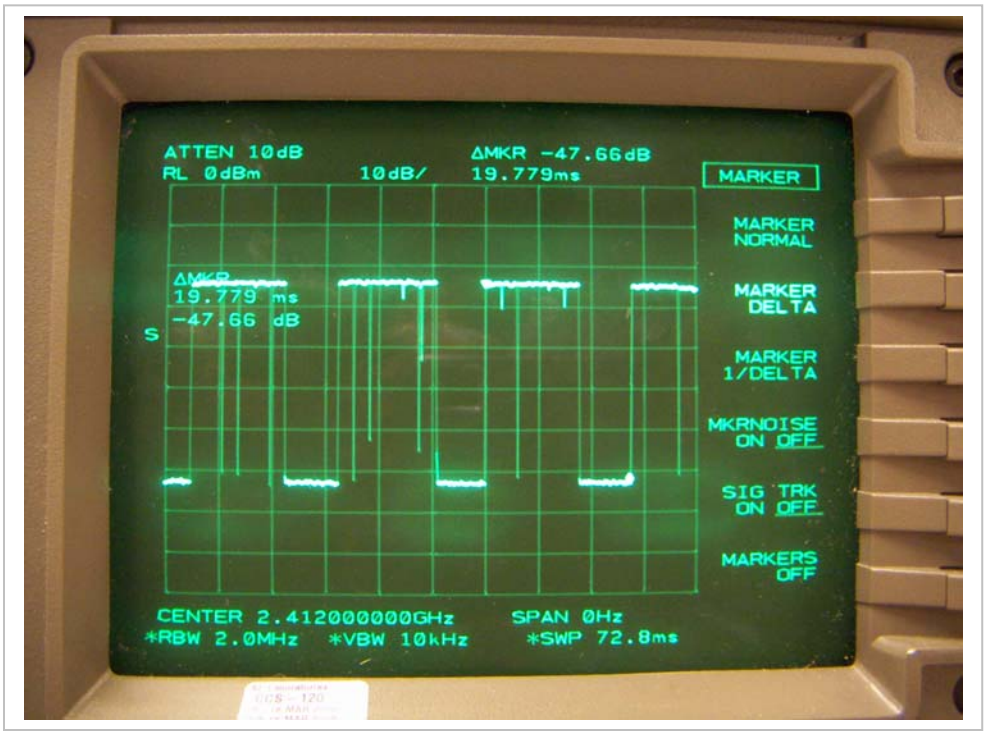

Ch 2412 Data Rate 6M bps Total Time 19.779 ms
Duty Cycle 64.4% Crest Factor 1.55

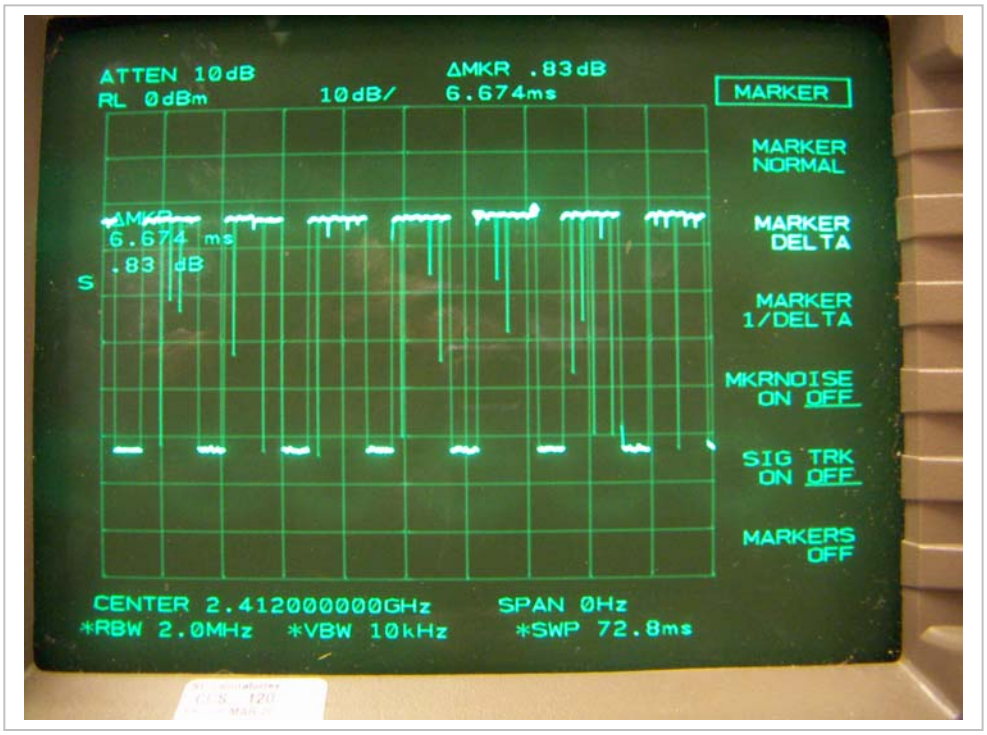

Ch 2412 Data Rate 12M bps ON Time 6.674 ms

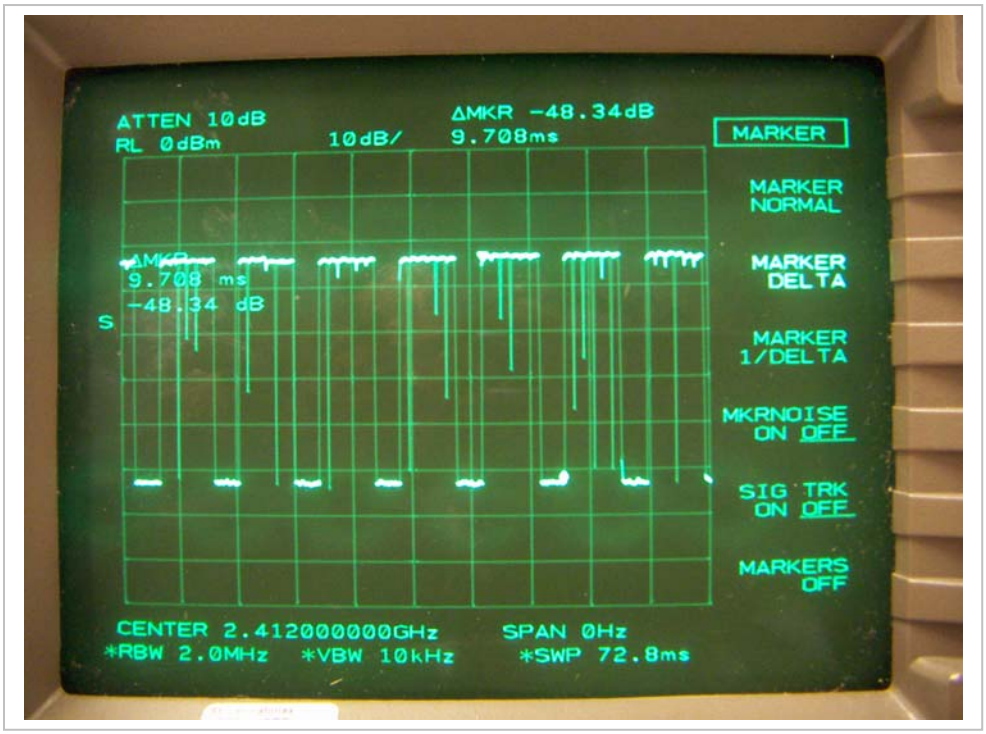

Ch 2412 Data Rate 12M bps Total Time 9.708 ms
Duty Cycle 68.75% Crest Factor 1.46

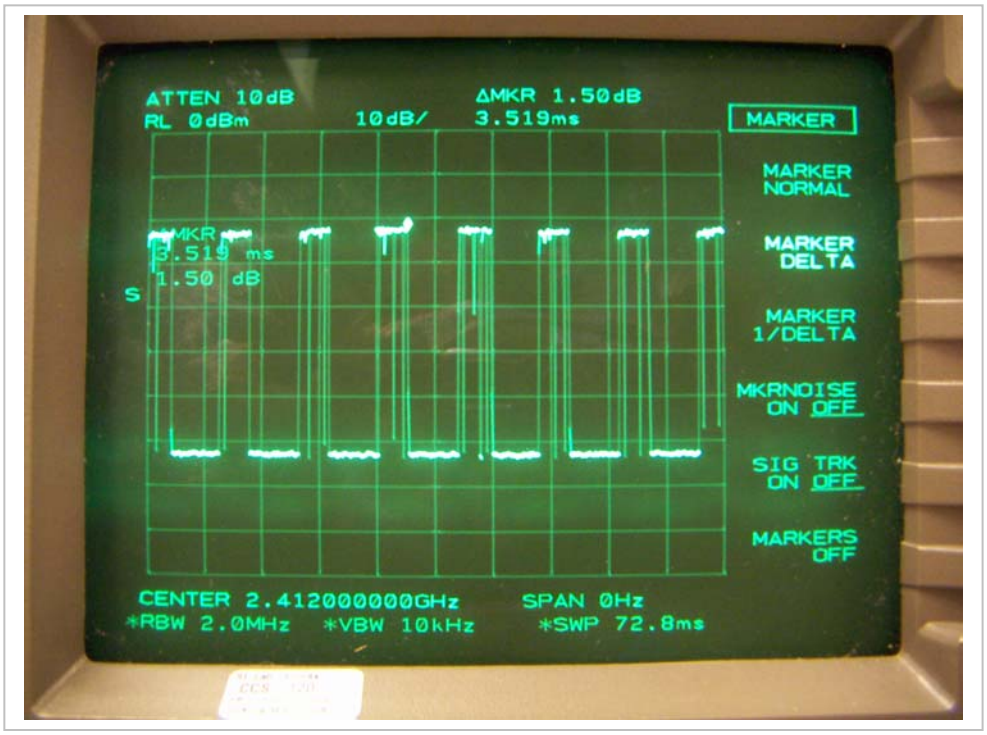

Ch 2412 Data Rate 24M bps ON Time 3.519 ms

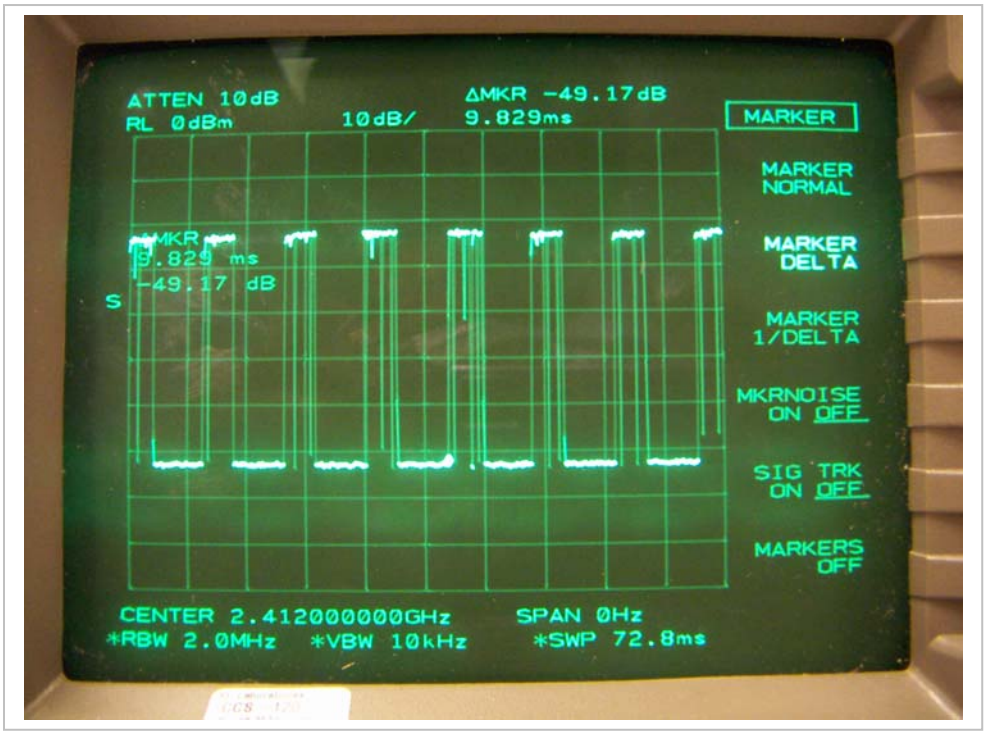

Ch 2412 Data Rate 24M bps Total Time 9.829 ms
Duty Cycle 35.81% Crest Factor 2.79

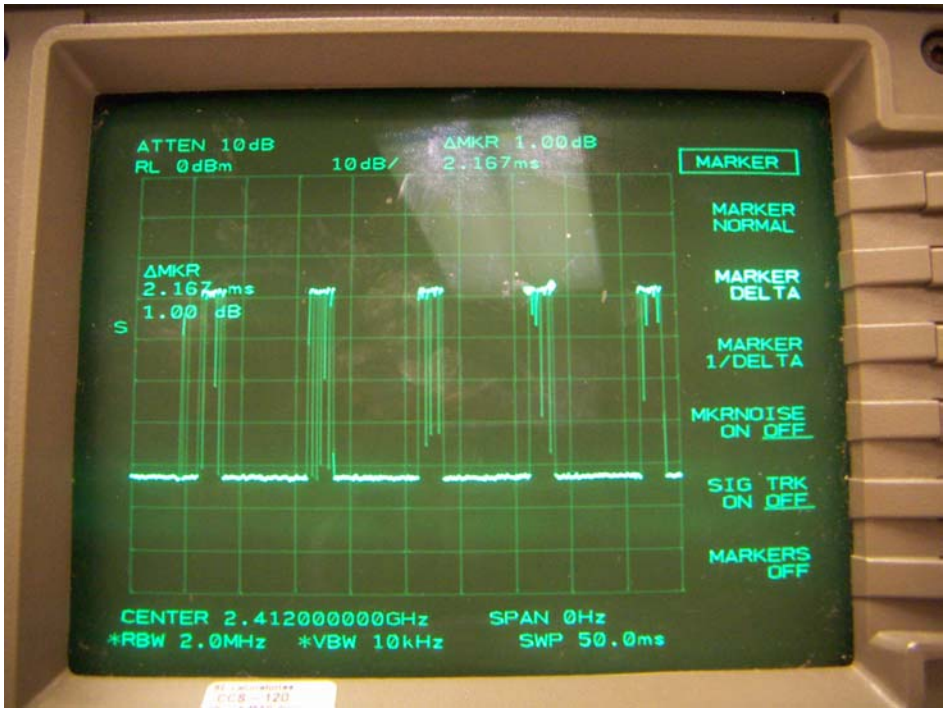

Ch 2412 Data Rate 48M bps ON Time 2.167 ms

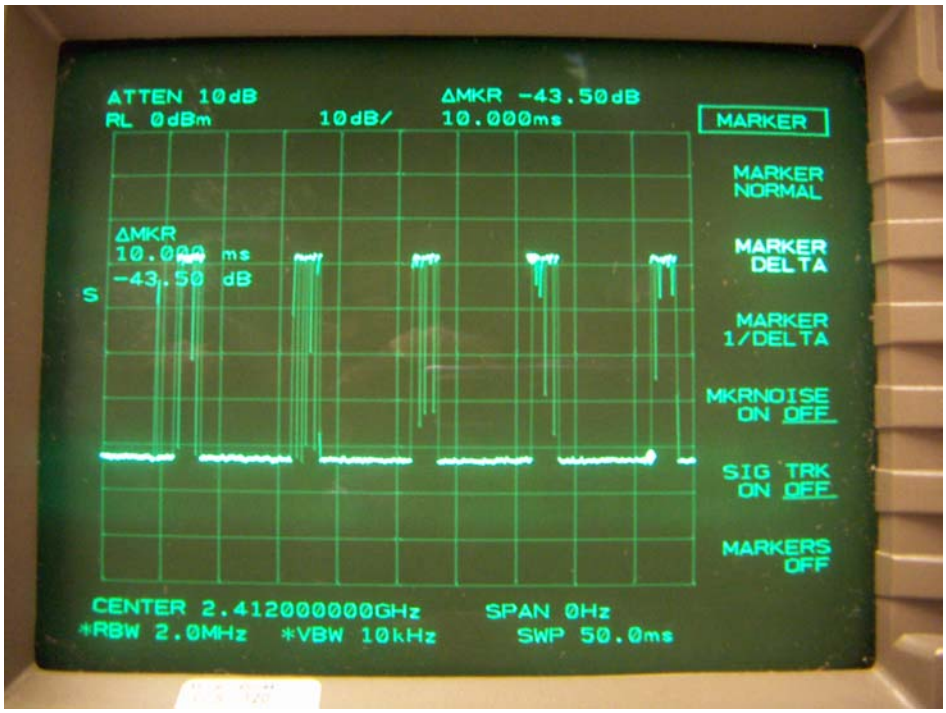

Ch 2412 Data Rate 48M bps Total Time 10 ms
Duty Cycle 21.67% Crest Factor 4.62

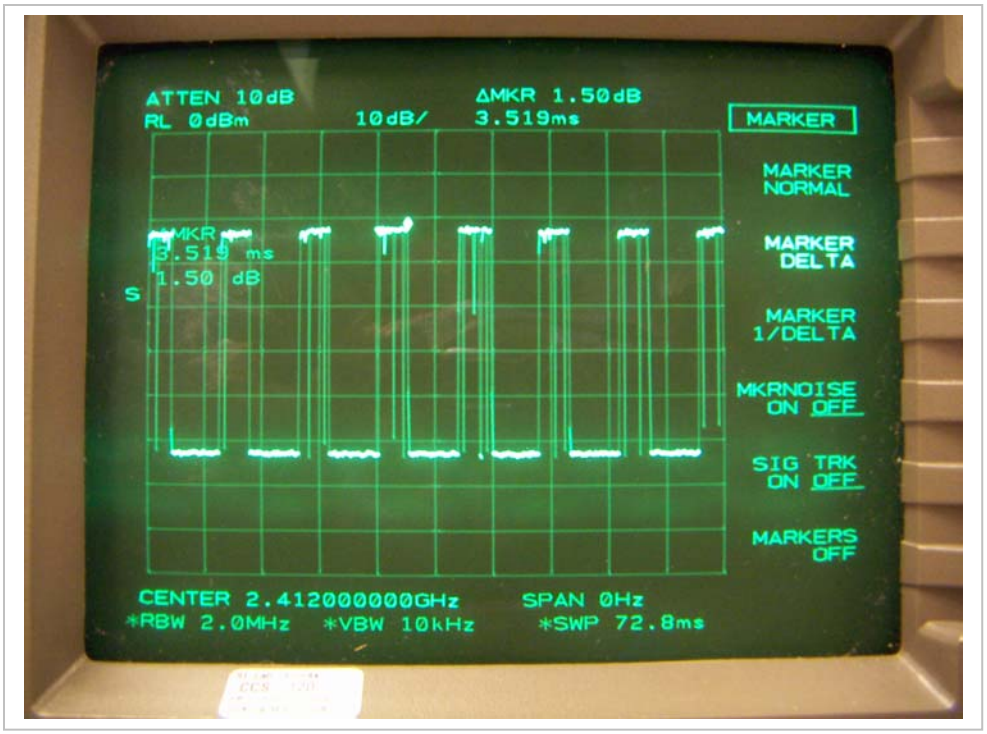

Ch 2412 Data Rate 54M bps ON Time 1.820 ms

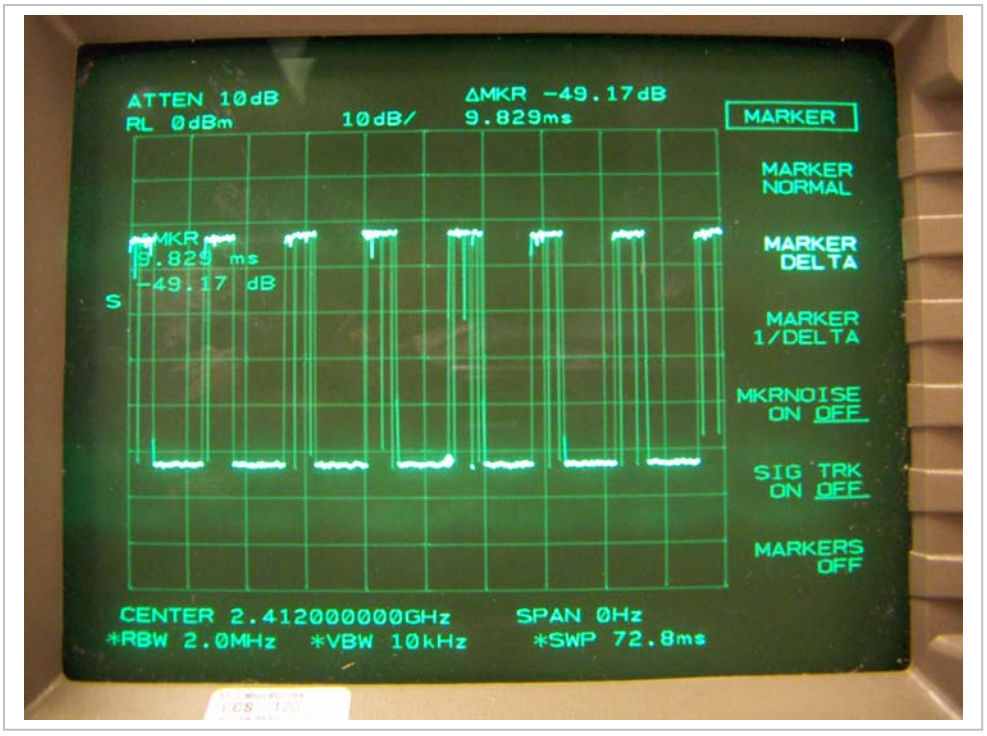

Ch 2412 Data Rate 54M bps Total Time 9.708 ms
Duty Cycle 18.75% Crest Factor 5.33