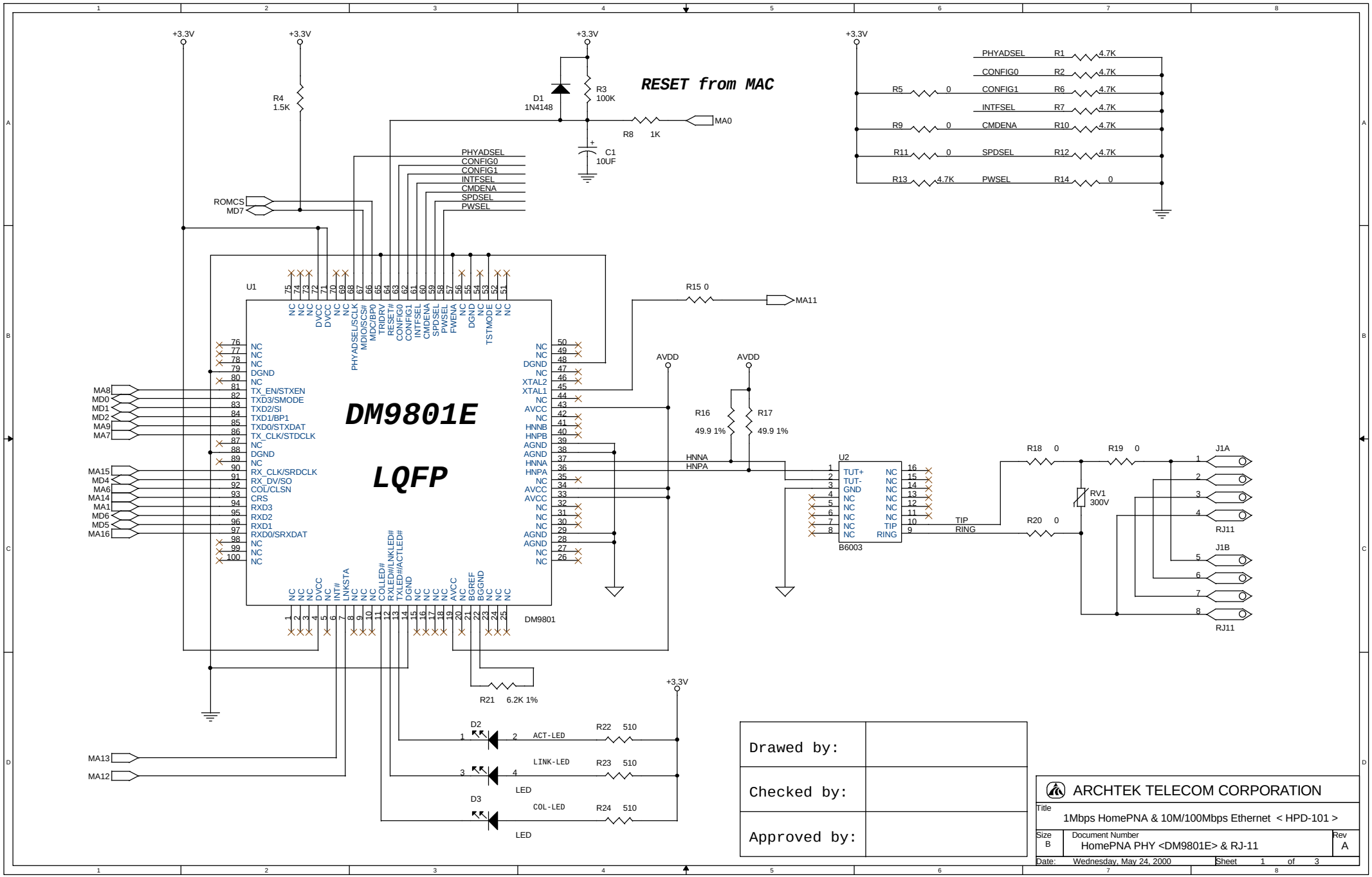

Drawed by:	
Checked by:	
Approved by:	

ARCHTEK TELECOM CORPORATION

Title: 1Mbps HomePNA & 10M/100Mbps Ethernet < HPD-101 >

Size: B | Document Number: HomePNA PHY <DM9801E> & RJ-11 | Rev: A

Date: Wednesday, May 24, 2000 | Sheet 1 of 3

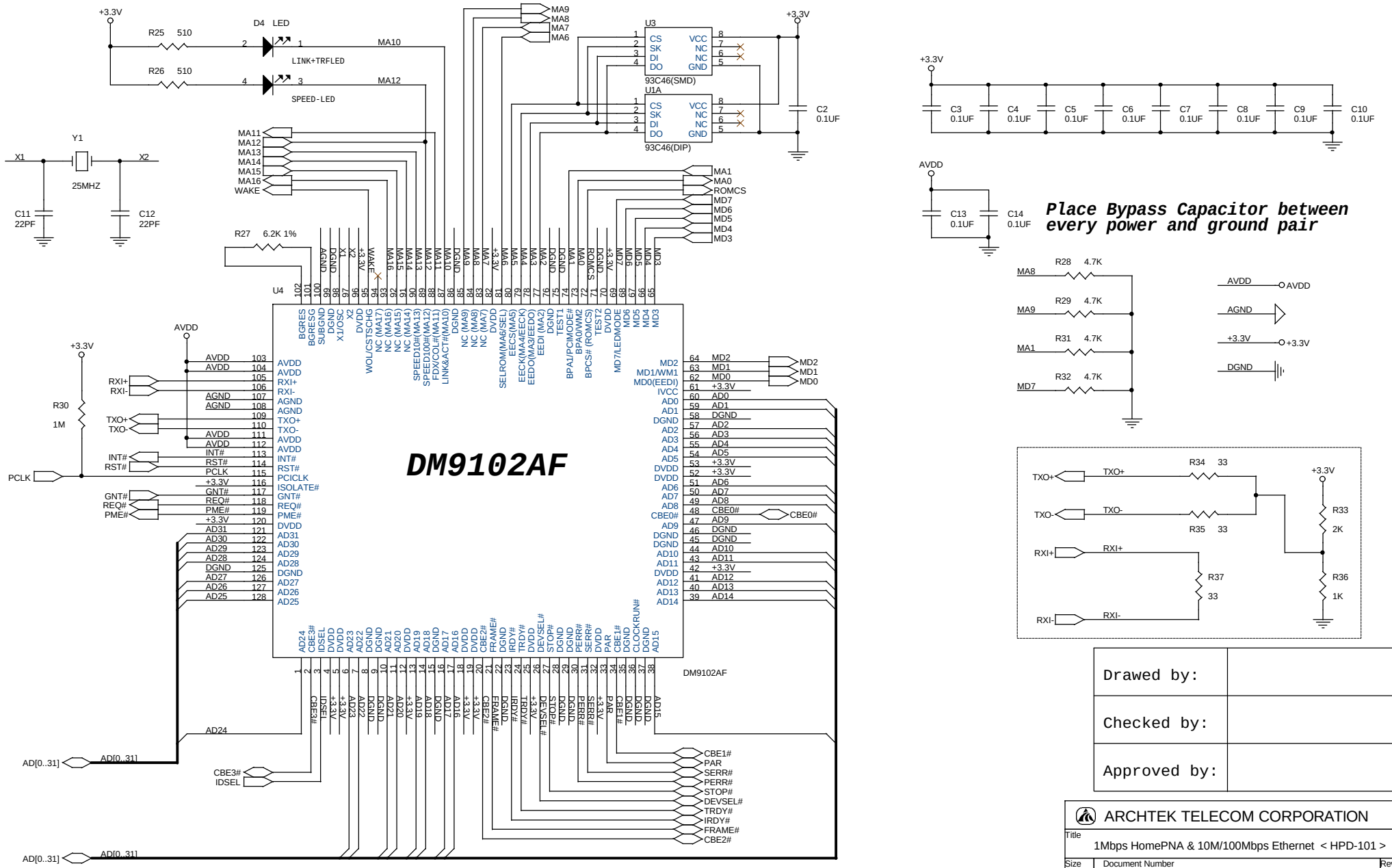
DM9102AF
U4
U3
93C46(SMD)
U1A
93C46(DIP)
D4 LED
LINK+TRFLED
SPEED-LED
R25 510
R26 510
Y1
25MHZ
X1
X2
C11 22PF
C12 22PF
R27 6.2K 1%
R30 1M
C2 0.1UF
C3 0.1UF
C4 0.1UF
C5 0.1UF
C6 0.1UF
C7 0.1UF
C8 0.1UF
C9 0.1UF
C10 0.1UF
C13 0.1UF
C14 0.1UF
Place Bypass Capacitor between every power and ground pair
R28 4.7K
R29 4.7K
R31 4.7K
R32 4.7K
R33 2K
R34 33
R35 33
R36 1K
R37 33
AD[0..31]
Drawed by:
Checked by:
Approved by:
ARCHTEK TELECOM CORPORATION
Title
1Mbps HomePNA & 10M/100Mbps Ethernet < HPD-101 >
Size B
Document Number
MAC Controller <DM9102AF> & EEPROM
Rev A
Date: Wednesday, May 24, 2000
Sheet 2 of 3

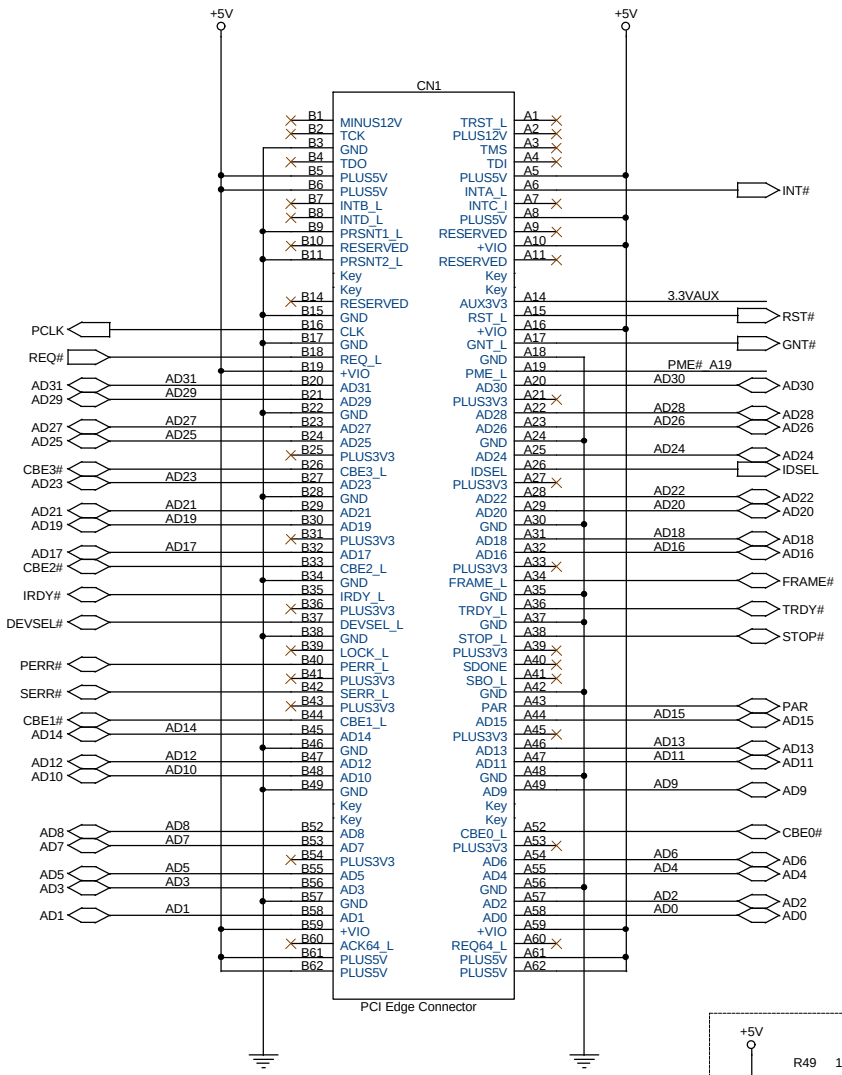

5V-3.3V POWER CIRCUIT

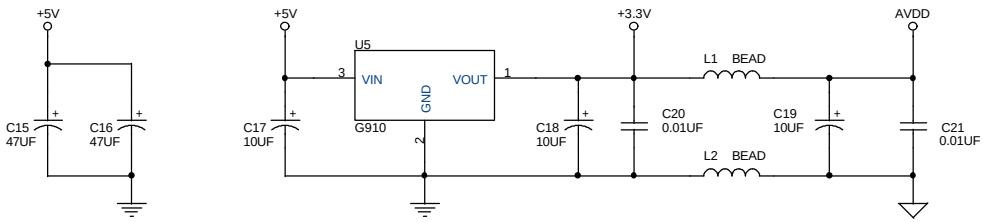

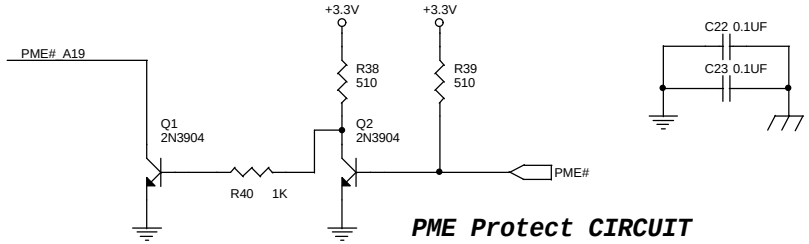

PME Protect CIRCUIT

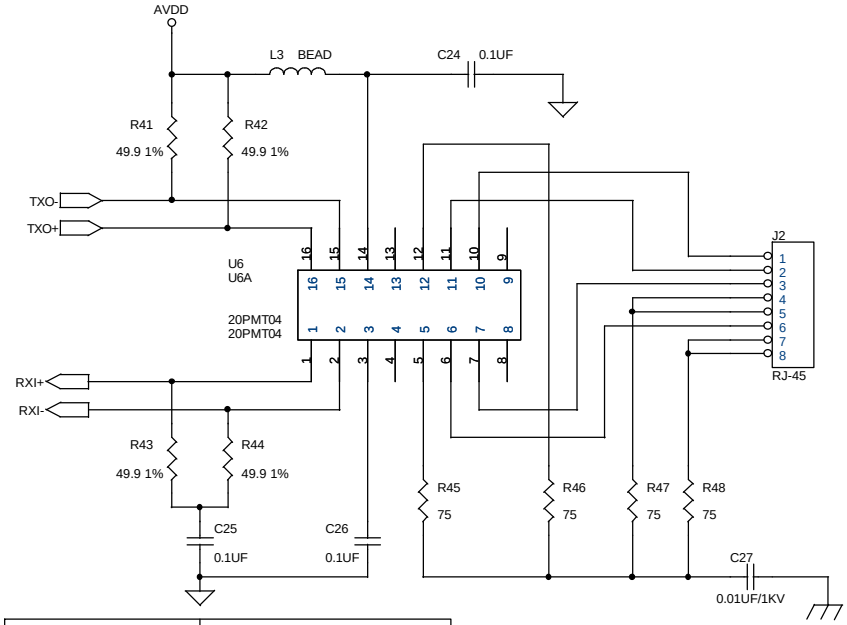

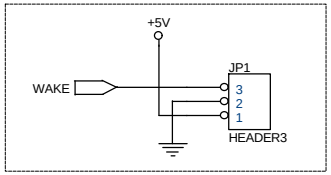

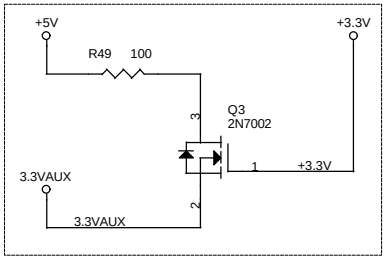

Drawed by:	
Checked by:	
Approved by:	

ARCHTEK TELECOM CORPORATION

Title: 1Mbps HomePNA & 10M/100Mbps Ethernet < HPD-101 >

Size: B | Document Number: PCI Interface & POWER & RJ-45 | Rev: A

Date: Tuesday, May 09, 2000 | Sheet 3 of 3