PocketPass™

Installation Instructions

16-0046-001 Rev D 10/16

PocketPass is designed for mounting to a vehicle's interior windshield surface using 3M™ Dual Lock™ strips. This mounting method provides for easy mounting and removal when portability is needed.

General Instructions and Guidelines

Proper Handling Prior to Installation

IMPORTANT: Prior to installation by the end user, PocketPass should be stored in the shielded bags and/or packaging provided by TransCore. Failure to properly store tags will result in shortened battery life.

Metallized Windshield

Some vehicle windshields contain a metallic treatment that could prevent an interior windshield-mounted device from working correctly. If you have a vehicle with a metalized windshield, contact your local customer service center for more information. If your vehicle's metalized windshield has a metal-free zone, it is typically located near the rear view mirror.

Windshield Band

Some windshields have a solid or dotted black frit band around the edges of the windshield. The frit band protects the windshield mounting materials from the sun and ultra-violet rays. The PocketPass may be placed behind this band if necessary without affecting tag performance.

Figure 1 – Windshield frit band

TRANSCORE®
Trusted Transportation Solutions

PocketPass Activation

Activating the PocketPass

1. Remove PocketPass from the shielded bag
2. Locate the battery door and find the battery protection tab (Figure 2).

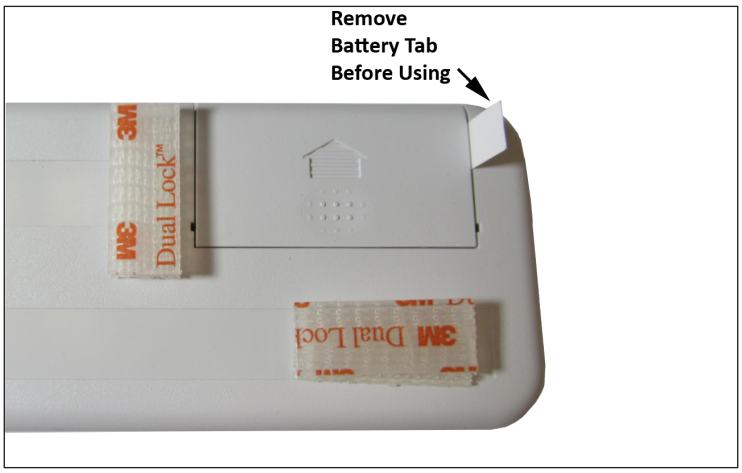

Figure 2 – Remove Battery Protection Tab

3. Keep the battery door closed while you pull and remove the battery protection tab.
4. Immediately after you remove the battery protection tab, a brief audio/visual sequence will occur as the PocketPass powers up. Refer to the Ready to Go section in Table 1 for a description of the audio/visual signals.
5. If the Ready to Go sequence does not occur, remove and reinstall the batteries as described in the PocketPass Battery Replacement section of these instructions.

PocketPass Installation and Removal

Required Supplies

- PocketPass
- Commercial glass cleaner and paper towels

Installation Locations for PocketPass

PocketPass should be mounted on the interior windshield, with the longest side parallel to the bottom of the windshield. Other tags should be kept at least 3 inches away from the PocketPass. The area on the dashboard beneath the PocketPass must be kept clear of paperwork and metallic items.

1. If the vehicle has a one-piece windshield, the PocketPass should be mounted as close to the bottom center of the windshield as possible; at least 3 inches away from the windshield frame or dashboard, and above the windshield wipers (Figure 3).

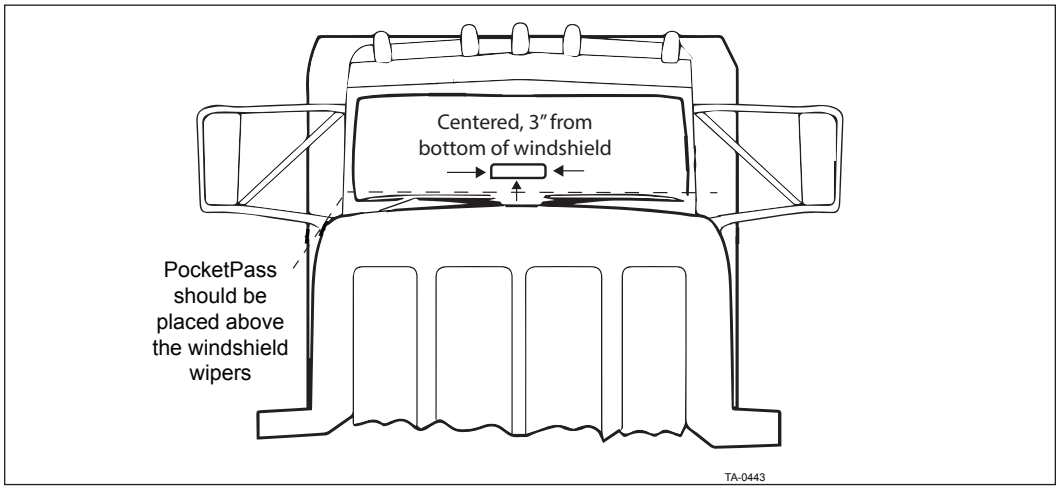

Figure 3 – Placement of PocketPass on one-piece windshield

2. If the vehicle has a two piece windshield, the PocketPass should be mounted on the passenger side, 3 inches away from the center dividing bar, above the windshield wipers and 4 inches above the bottom of the windshield (Figure 4).

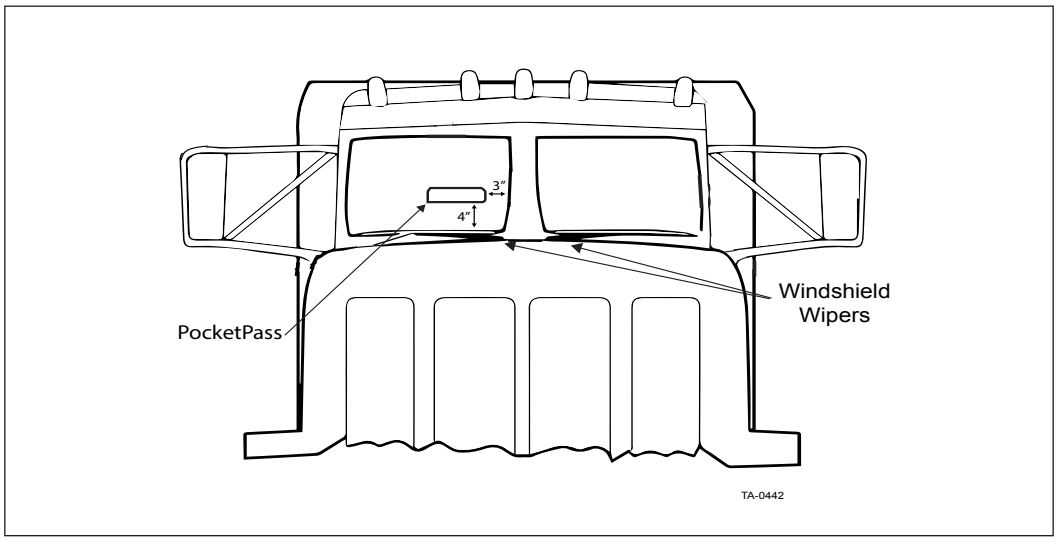

Figure 4 – Placement of PocketPass on two-piece windshield

Installation with Dual Lock Strips

1. Clean and dry the interior windshield surface completely before affixing the Dual Lock strips. The windshield temperature must be at least 68ºF (20ºC) for optimum bonding.
2. Peel the backing off the Dual Lock strips to expose adhesive (Figure 5). Leave both sides of the Dual Lock strips pressed together to ensure the strips will align between the PocketPass and windshield. Apply the PocketPass to the windshield using moderate pressure.

Note: When installing the PocketPass using Dual Lock strips for the first time, leave it in place for at least 24 hours to allow the adhesive to cure.

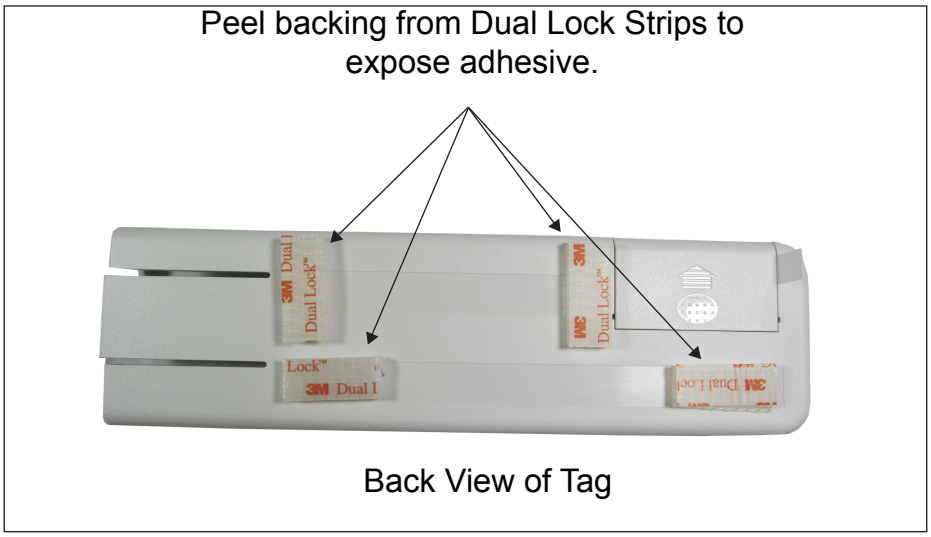

Figure 5 – Mounting PocketPass to the interior windshield

3. To remove a PocketPass mounted with Dual Lock strips from the windshield, grip the case at the top and bottom sides. Pull the PocketPass away from the windshield, starting on one end and working until the PocketPass is free from the windshield (Figure 6).

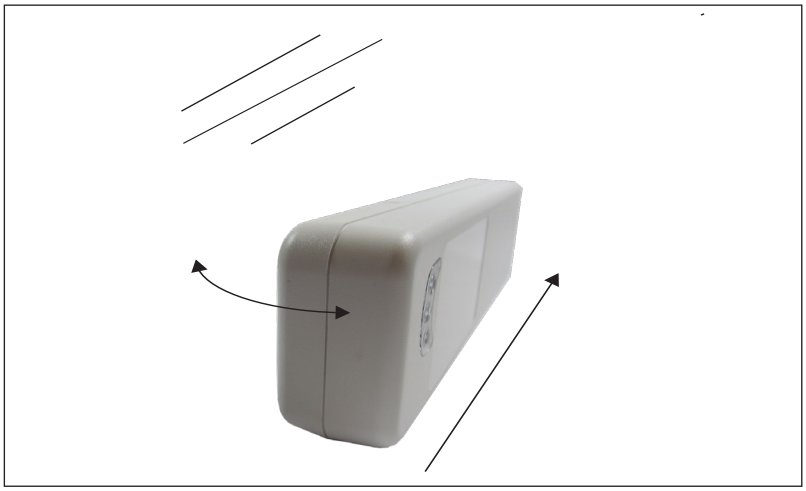

Figure 6 – Removing PocketPass from windshield

PocketPass Battery Replacement

Two lithium AAA batteries are pre-installed in your PocketPass.

NOTE: For proper operation, the PocketPass requires lithium batteries. TransCore recommends Energizer® Advanced Lithium AAA batteries.

To replace the batteries, remove the PocketPass from the windshield as described in *Step 3 on page 4*.

1. Hold the PocketPass with the LED side facing down. Locate the battery door. Press the indentation located under the arrow and slide the door in the direction of the arrow to open the door.
2. Remove the old batteries and replace them with lithium AAA batteries according to the diagram on the inside of the battery compartment (Figure 7).

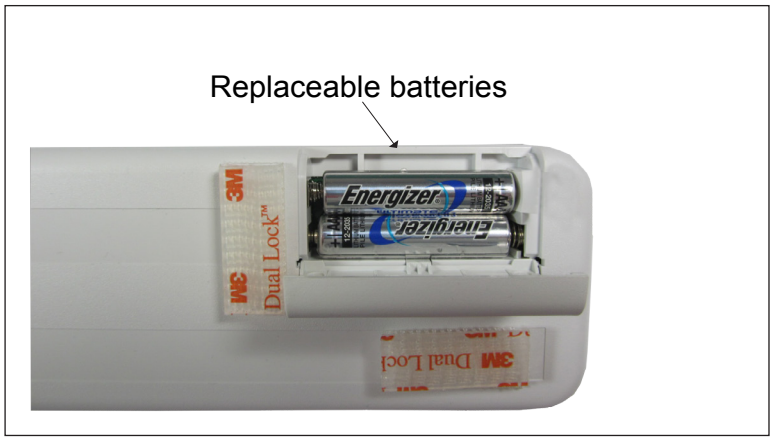

Figure 7 – Replaceable batteries

3. Close the cover and slide it back into place. You should hear a soft snap when the cover is in the correct position.
4. Immediately after you install fresh batteries, a brief audio/visual sequence will occur as the PocketPass powers up. Refer to the Ready to Go section in Table 1 for a description of the audio/visual signals. If there is an ASTM V6 AV code stored, the sequence may take up to 15 minutes to complete.
5. Reinstall the PocketPass on the windshield by pressing it back onto the Dual Lock strips.

Audio/Visual Signals

Your PocketPass is equipped with audio/visual signals that will alert you about certain conditions relevant to your tag. Refer to Table 1 for a list of audio and visual signals for your tag.

Table 1 – PockePass Audio/Visual Signals

Notification	Indication	Audio/Visual Signals	
Ready to Go	Indicates tag is ready for operation Occurs after fresh batteries are installed	x 4	Four quick beeps accompanied by visual signals
			LEDs flash once in sequence, once together
Low Battery Warning	Indicates low power Occurs when batteries need to be replaced	--	Short beeps accompanied by visual signals occur until batteries are replaced or expended
			LEDs flash together
Title 21 Acknowledge (T21 Protocol Only)	Indicates a successful transaction Ocurs as the vehicle passes through a Title-21 toll installation	x 2	Two short beeps accompanied by visual signals
			LED flashes 5 times
Weigh Station Bypass (ASTM V6 Protocol Only)	Indicates that driver may bypass the weigh station Occurs just prior to a weigh station off-ramp	x 9	Nine 2-second beeps, accompanied by visual signals
			LED stays constant for 6 seconds, then displays 2 two short flashes at 3 second intervals for 15 seconds. The LED flashes every 10 seconds for 15 minutes
Weigh Station Pull-in (ASTM V6 Protocol Only	Indicates that the driver must pull into the weigh station Occurs just prior to a weigh station off-ramp	x 18	Eighteen half-second beeps, accompanied by visual signals
			LED stays constant for 6 seconds, then displays 2 two short flashes at 3 second intervals for 15 seconds. The LED flashes every 10 seconds for 15 minutes

NO UNAUTHORIZED MODIFICATIONS STATEMENT

Caution: *This equipment may not be modified, altered, or changed in any way without permission from TransCore, LP. Unauthorized modification may void the equipment authorization from the FCC and will void the TransCore warranty.*

RADIO FREQUENCY INTERFERENCE STATEMENTS

Note: *This device complies with Part 15 of the FCC Rules and the Industry Canada Licence-Exempt RSS Standards. Operation is subject to the following two conditions:*

(1) this device may not cause interference, and

(2) this device must accept any interference, including interference that may cause undesired operation of this device.

Note: *Le présent appareil est conforme aux CNR d'Industrie Canada applicables aux appareils radio exempts de licence. L'exploitation est autorisée aux deux conditions suivantes:*

(1) l'appareil ne doit pas produire de brouillage, et

(2) l'utilisateur del'appareil doit accepter tout brouillage radioélectrique subi, même si le brouillage est susceptible d'en compromettre le fonctionnement.

For more information:

Sales Support
800.923.4824

Technical Support
505.856.8007

transcore.com

TRANSCORE®
Trusted Transportation Solutions

© 2016 TransCore L.P. All rights reserved. TRANSCORE and TRANSSUITE are registered trademarks, and are used under license. All other trademarks listed are the property of their respective owners. Contents subject to change. Printed in the U.S.A.