System Guide

P/N 411288-002

AI1620 SmartPass®

Intermec

A UNOVA Company

Amtech Systems Division

Information in this document is subject to change and does not represent a commitment on the part of Amtech Systems Corporation.

© 1999 Amtech Systems Corporation. (Amtech Systems Corporation is a wholly owned subsidiary of Intermec Technologies Corporation.) All rights reserved. No portion of this publication may be reproduced or transmitted in any form by any means without prior written permission of Amtech Corporation.

Aspects of the wireless data and security equipment and systems marketed by Amtech Systems Corporation and its affiliates are protected by patents and patents pending in the United States and other countries.

Amtech is a registered trademark of Amtech Systems Corporation.

SmartPass® is a registered trademark of Amtech Systems Corporation.

Throughout this manual, trademarked names may be used. Rather than put a trademark symbol (™ or ®) in every occurrence of a trademarked name, we state that we are using the names only in an editorial fashion and to the benefit of the trademark owner, with no intention of infringement.

All other trademarks listed are the property of their respective owners. Printed in the U.S.A.

For further information, contact:

Amtech Systems Corporation
19111 Dallas Parkway, Suite 300
Dallas, Texas 75287-3106 USA

Phone: (972) 733-6600
Fax: (972) 733-6699

Amtech Response Center
19111 Dallas Parkway, Suite 300
Dallas, Texas 75287-3106 USA

Phone: (972) 733-6681
Fax: (972) 733-6695

WARNING TO USERS IN THE UNITED STATES

FEDERAL COMMUNICATIONS COMMISSION (FCC) RADIO FREQUENCY INTERFERENCE STATEMENT
47 CFR §15.105(a)

NOTE: This equipment has been tested and found to comply with the limits for a Class A digital device pursuant to Part 15 of the Federal Communications Commission (FCC) rules. These limits are designed to provide reasonable protection against harmful interference when the equipment is operated in a commercial environment. This equipment generates, uses, and can radiate radio frequency (RF) energy and may cause harmful interference to radio communications if not installed and used in accordance with the instruction manual. Operating this equipment in a residential area is likely to cause harmful interference, in which case, depending on the laws in effect, the users may be required to correct the interference at their own expense.

NO UNAUTHORIZED MODIFICATIONS
47 CFR §15.21

CAUTION: This equipment may not be modified, altered, or changed in any way without permission from Amtech Corporation. Unauthorized modification may void the equipment authorization from the FCC and will void the Amtech warranty.

USE OF SHIELDED CABLES IS REQUIRED
47 CFR §15.27(a)

Shielded cables must be used with this equipment to comply with FCC regulations.

A license issued by the FCC is required to operate this RF identification device in the United States. Contact Amtech Corporation for additional information concerning licensing requirements for specific devices.

Amtech Corporation
USA

Contents

Table of Contents

1 Introduction

Introduction 1-3

Audience 1-3

System Guide Organization 1-3

Document Conventions 1-4

System Description 1-4

License Requirements 1-5

2 Developing the Site Plan

Overview 2-3

Reader and Tag Alignment 2-3
- Polarization 2-4
- Unobstructed Line of Sight 2-5

Site Layout and Traffic Flow 2-7
- SmartPass Read Zone 2-8
- Other SmartPasses in the Area 2-8
- Lane Configurations 2-8
  - Open Lane Configuration 2-8
  - Gate with Center Island Configuration 2-11
  - Parking Garage with Ticket Island Configuration 2-11
- Reflection, Refraction, and Diffraction of RF Signals 2-12
- Existing Interference 2-13

Electrical and Communications Requirements 2-13
- Junction Box 2-13
- Power and Communications Cable 2-13
  - Electrical Power 2-14
  - Host Communications 2-15
  - RS–232 Interface 2-16
  - RS–422 Interface 2-16
  - Wiegand Interface 2-16
- Input/Output Circuits 2-16

3 Choosing, Installing, and Removing Tags

Tag Types 3-3
Tag Models 3-3
Reader/Tag Interoperability 3-5
Tag Data Formats 3-6
Installing Interior Tags 3-6
Materials Required 3-7
Tag Positioning 3-7
Interior Driver's or Passenger's Side 3-7
Interior Center Windshield 3-8
Installation Procedures 3-8

Removing Interior Tags 3-9

Installing Exterior Tags 3-9
Materials Required 3-10
Tag Positioning 3-10
Installation Procedures Using Tape 3-11
Installation Procedures Using Blind Rivets 3-11

Removing Exterior Tags 3-11

4 Testing and Configuring SmartPass Before Installation

Materials Required 4-3
Materials Supplied 4-3
Cable Supplied 4-3
Additional Materials Needed 4-4

Testing Using an Audible Circuit Tester 4-4
Connecting the AC Power Supply 4-5
Connecting the DC Power Supply 4-6
Testing SmartPass 4-6

Configuring SmartPass 4-7
Connecting SmartPass to the PC 4-7
Using a RS-232 Interface 4-7
Using RS-422 Interface 4-10
Using Wiegand Interface 4-10
Default Configuration Settings 4-12
General Configuration Settings 4-12
Operating Parameter Settings 4-12
Configuring Operating Parameters Using Terminal Emulation Software 4-14

Configuring Operating Parameters Using SmartPass Host 4-14
Loading and Starting SmartPass Host 4-15
Verifying PC-to-SmartPass Communications 4-15
Verifying Tag Read Capability 4-18
Configuring SmartPass Parameters 4-20
Reset 4-25

5

General Software Information

Command Entry Conventions 5-3

Command Response Conventions 5-4

Operating Parameters 5-5

Power Fail 5-5

Program Download 5-5
Download Considerations 5-5
Download Procedures 5-6

Startup 5-7
Sign-On Message 5-7
Boot Failure Message 5-7

Tag/Message Buffer 5-7

6

Communication Protocols

Introduction 6-3

Basic Protocol 6-3

Error Correcting Protocol 6-4

Data Inquiry Protocol 6-4

Basic and ECP Protocol Format 6-5
Reader Transmissions 6-5
ECP Host ACK/NAK Response 6-6
Switch to Command Mode Request 6-7
Host Transmission 6-7
Reader Command Response 6-8
Sample Messages 6-9
Reader Transmissions 6-9
Host Command Transmissions 6-9

Timing and Synchronization 6-10
Reader-Addressed Failure Conditions 6-12
Illegal Sequence Number (Not in the Range 0–9, A–F) 6-12
Wrong Sequence Number 6-12
Bad CRC 6-12
Illegal Command 6-12
Transmission Timeout 6-12
Receive Timeout 6-12
Asynchronous Message/Command Message Collision 6-12
Host-Addressed Failure Conditions 6-12
Illegal or Wrong Sequence Number 6-12
Bad CRC 6-13
Transmission Timeout 6-13
Receive Timeout 6-13
Asynchronous Message/Command Message Collision 6-13

ECP Reliability 6-13

CRC Calculation 6-13

7 Commands

Introduction 7-3

Operating Modes 7-3
Data Mode 7-3
Command Mode 7-4
Download Mode 7-5

Command List 7-5
Reader Mode Control — Command Group 0 7-5
00 Switch to Data Mode (Factory Default) 7-5
01 Switch to Command Mode 7-5
05 Switch to Download Mode 7-6
06 Transmit Buffer Entry 7-6
Communications Port Control — Command Group 1 7-7
100N Select Baud Rate 7-7
101N Select Stop Bits 7-7
102N Select Parity 7-8
Real-Time Clock — Command Group 2 7-8
20 Set Time 7-8
21 Set Date 7-9
22 Display Time and Date 7-9
Append Information — Command Group 3 7-9
30N Append Time and Date Selection 7-10
31N Append Auxiliary Information Selection 7-10
ID Filtering — Command Group 4 7-11

40 Transmit All ID Codes 7-11
410N Anti-Passback (Select Unique ID Code Criteria) 7-11
43 Buffer All ID Codes 7-12
450 Disable Wiegand Mode (Factory Default) 7-12
451 Enable Wiegand Mode 7-13
452 Disable Tag Translation Mode (Factory Default) 7-13
453 Enable Tag Translation Mode 7-13
46NN Set Wiegand Retransmit Interval 7-13
48N Select Dual-Frame Processing Mode 7-14
Reader Status — Command Group 5 7-15
505 Display Software Version 7-15
506 Display Hardware Configuration Information 7-15
520 Display Power Fail Bit 7-15
521 Display Reader ID Number 7-15
522 Display Communications Port Parameters 7-16
524 Display Appended Information Status 7-16
525 Display Communications Protocol Status 7-17
526 Display I/O Status 7-18
527 Display RF Status 7-19
529 Display Presence Input Status 7-20
530 Display RF0 Filter Status 7-21
532 Display Wiegand Mode Status 7-22
533 Display Wiegand Retransmit Interval 7-22
534 Display Tag Translation Mode Status 7-22
535 Display Buffer Control Status 7-23
536 Display Dual-Frame Processing Mode 7-23
537 Display Echo Status 7-23
540 Display Flash Checksum 7-24
543 Display Boot Checksum 7-24
550 Display Periodic Check Tag Status 7-24
551 Display Selected Check Tag Option 7-25
560 Display Input Status Change Report Options 7-25
Reader Control Functions — Command Group 6 7-25
60NN Set Reader ID Number 7-25
610 Select Basic Protocol (Factory Default) 7-26
611 Select Error Correcting Protocol 7-26
612NN Select Error Correcting Protocol Timeout 7-26
613 Select Data Inquiry Protocol 7-27
614N Select Flow Control Option 7-27
6160 Disable Buffer Control Mode (Factory Default) 7-27
6161 Enable Buffer Control Mode 7-28
6170 Disable Echo Mode 7-29
6171 Enable Echo Mode (Factory Default) 7-30
620N Output Control 7-30
621 Predefined Output Control (Factory Default) 7-30
63 Reset Reader 7-30
640N RF Control 7-31
641 Select RF-by-Input Control (Factory Default) 7-31

642NN Select RF Operating Frequency 7-31
643NN Select RF Operating Range (Distance) 7-34
65 Reset Power Fail Bit 7-34
660 Test External RAM 7-35
661 Display Diagnostic Results 7-35
664 Test Real-Time Clock 7-35
667 Verify Boot ROM Checksum 7-36
668 Verify Flash Memory Checksum 7-36
669 Perform All Diagnostics 7-36
66F Load Default Operating Parameters 7-36
67N Set Output Pulse Duration 7-36
690N Select Presence Without Tag Report Option 7-37
692N Select RF Control Algorithm 7-38
693N Select RF Timeout Period 7-39
694N Select Input Inversion Option 7-40
695 Set Serial Number 7-40
696S...S Store Hardware Configuration String 7-40
Auxiliary Reader Control — Command Group 8 7-41
810 Disable Periodic Check Tag (Factory Default) 7-41
8110 Perform System Check Tag Test 7-41
8120 Enable Periodic Check Tag 7-41
8160 Select Internal Check Tag (Factory Default) 7-41
82N Select Input Status Change Report Option 7-42
Flash Memory Control — Command Group 9 7-42
90 Load Program Block 7-42
91 Verify Flash Checksum 7-43
96 Erase Flash Memory 7-43
97 Perform Destructive Flash Test 7-43
99 Exit Download Mode 7-43

8 Installing SmartPass

Installation Process 8-3

Installation Accessory Kits 8-3
Cabling Assignments 8-3

Mounting SmartPass to Round Pole or Flat Surface 8-6
Mounting SmartPass on a Round Pole 8-6
Materials Required 8-6
Procedures 8-7
Mounting SmartPass to a Wall or Ceiling 8-9
Materials Required 8-9
Procedures 8-10

Connecting the AC Power Supply 8-13
Connecting the DC Power Supply 8-14

Marking the Read Zone 8-14
Materials Required 8-14
Marking Procedures 8-15
Fine-Tuning and Verifying the Read Zone 8-16

Connecting Communications 8-18
Connecting SmartPass to the PC 8-18
Using a RS-232 Interface 8-18
Using RS-422 Interface 8-20
Using Wiegand Interface 8-21

Connecting Sense Input and Sense Output Circuits 8-22
Connecting Sense Input Circuits 8-23
Connecting Sense Output Circuits 8-23

9 **Troubleshooting and Maintenance**

Error Messages 9-3

Troubleshooting 9-5

Product Repair and Returns 9-7

Technical Support 9-7

Marketing Support 9-7

Find Something Wrong or Want to Suggest an Improvement? 9-7

A **Glossary**

B **Technical Specifications**

Reader Specifications B-3
Communications B-3
Hardware Features B-3
Power Requirements B-3
Physical Attributes B-3
Environmental Parameters B-4
Options B-4

C Wiring Tables

Communications Interfaces C-3

Cable Supplied with SmartPass C-4
RS–232 Interface C-5
RS-422 Interface C-6
Wiegand Interface C-7

Power Supply Connections C-7
AC Power C-7
Low-Voltage DC Power C-8

Input/Output Cabling Assignments C-9

Summary Table C-12

D Command Quick Reference

Factory Default Settings D-3

Numerical Command List D-5

Alphabetical Command List D-13

E Using Error Correcting Protocol

Communications in ECP E-3
Setting Up Meta Keys E-3
Understanding Sequence Numbers E-5
Reader Power Down or Power Loss E-5
Escaping from an ECP Loop E-5
Changing the Time-out Value E-6

List of Figures

Figure 1-1 SmartPass Front and Side Views 1-5
Figure 2-1 Tag Horizontal and Vertical Orientation 2-4
Figure 2-2 SmartPass Location Relative to Tag Position 2-5
Figure 2-3 Typical Tag Positions for U.S. Driver's Side Reader 2-6
Figure 2-4 Typical Tag Positions for U.S. Passenger's Side Reader 2-6
Figure 2-5 Typical Tag Positions for SmartPass Mounted Overhead 2-7
Figure 2-6 Open Lane Configuration 2-9
Figure 2-7 Overhead Open Lane Configuration 2-10
Figure 2-8 Gate Application with Center Island 2-11
Figure 2-9 Parking Garage Application 2-12
Figure 3-1 Driver's or Passenger's Side (U.S.) Interior Windshield Tag Location 3-8
Figure 3-2 Upper Center Interior Windshield Tag Location 3-8
Figure 3-3 Hook-and-Loop Material on Interior Tag 3-9
Figure 3-4 Ideal Exterior Tag Locations 3-10
Figure 3-5 Exterior Tag with Double-Sided Tape 3-11
Figure 4-1 Wiring for Audible Circuit Tester 4-5
Figure 4-2 DB9 and DB25 Connector Pin Assignments for Signal to Host 4-8
Figure 4-3 Status Window 4-15
Figure 4-4 Find Reader Options 4-16
Figure 4-5 Communications Established Message 4-16
Figure 4-6 Reader Not Found Message 4-17
Figure 4-7 Successful Tag Read 4-18
Figure 4-8 Second Successful Tag Read 4-19
Figure 4-9 Select Appended Data Dialog Box 4-20
Figure 4-10 Check Tag Options Submenu 4-21
Figure 4-11 Select Periodic Checktag Option Dialog Box 4-22
Figure 4-12 Select Tag Filter Dialog Box 4-23
Figure 4-13 Select Presence Report Option Dialog Box 4-24
Figure 4-14 Select Sensor Report Option Dialog Box 4-25
Figure 4-15 Reader Reset option 4-26
Figure 4-16 Sign-On Message 4-26
Figure 4-17 Current RF Display Box 4-27
Figure 4-18 Set RF option 4-28
Figure 4-19 Select Transmission Option Dialog Box 4-28
Figure 4-20 SmartPass RF Control Options 4-30
Figure 4-21 Set Sensor Control of RF 4-31
Figure 4-22 Sense Input Status Dialog Box 4-32
Figure 4-23 Select Input Mode Dialog Box 4-33
Figure 4-24 Port Configuration Parameters Dialog Box 4-34
Figure 4-25 Protocol Parameters Submenu 4-35
Figure 4-26 Select Communications Protocol Dialog Box 4-35
Figure 4-27 Port Configuration Parameters Submenu 4-36

Figure 4-28 Select Flow Control Option Dialog Box 4-37
Figure 4-29 Select Option Dialog Box 4-37
Figure 4-30 Select Translation Option Dialog Box 4-38
Figure 5-1 Download File Name Entry 5-6
Figure 8-1 Factory-Mounted Bracket 8-7
Figure 8-2 Pole Mount Bracket Assembly 8-7
Figure 8-3 SmartPass Mounted Using Pole Mount Bracket 8-8
Figure 8-4 Front and Top Views of SmartPass Position 8-9
Figure 8-5 Wall Mount Bracket Accessory 8-10
Figure 8-6 Wall Mount Bracket Attached to SmartPass 8-11
Figure 8-7 Factory Mount Bracket Attached to Wall Mount Bracket 8-11
Figure 8-8 Pole Mount Bracket Attached to Wall 8-12
Figure 8-9 Connecting SmartPass Assembly to Pole Mount Bracket 8-12
Figure 8-10 Sample Read Zone Marking Pattern 8-16
Figure 8-11 Range Value Dialog Box 8-17
Figure 8-12 DB9 and DB25 Connector Pin Assignments for Signal to Host 8-19
Figure 8-13 Sample Circuit Connections 8-23
Figure C-1 DB9 and DB25 Connector Pin Assignments for Signal to Host C-4

List of Tables

Table 2-1 Connector Cabling Accessory Kits 2-13
Table 2-2 Power Supply Current Requirements 2-14
Table 2-3 Cable length from Amtech-Supplied 110 V AC to 18 V AC Transformer to AI1620 SmartPass 2-15
Table 2-4 Communications Interfaces and Conductors 2-15
Table 3-1 Tag Configuration Guidelines 3-3
Table 3-2 Reader/Tag Interoperability 3-5
Table 4-1 AC Transformer Connections for Colored Pair Wire Cable 4-5
Table 4-2 Low Voltage DC Cable Connections for the Colored Pair Wire Cable 4-6
Table 4-3 RS–232 Interface Signal Wiring for Colored Wire Pair Cable 4-9
Table 4-4 RS–422 Interface Signal Wiring for Colored Wire Pair Cable 4-10
Table 4-5 Wiegand Interface Signal Wiring for Colored Wire Pair Cable 4-11
Table 4-6 SmartPass Configuration Label Fields 4-12
Table 4-7 SmartPass Default Configuration Settings 4-13
Table 5-1 Four-Character Command Structure 5-3
Table 5-2 Sample Command Sequence 5-4
Table 6-1 Example of Routine to Calculate CRC 6-14
Table 6-2 Example of Routine to Calculate CRC-CCITT without Lookup Table 6-14
Table 6-3 Example of Routine to Calculate CCITT-CRC with Lookup Table 6-15
Table 6-4 Example of Routine to Create Lookup Table 6-16
Table 7-1 RF Frequency Commands 7-32
Table 7-2 Output Pulse Duration Hex Commands 7-37
Table 7-3 Tag Reporting Option Commands 7-38
Table 7-4 RF Control Algorithm Commands 7-38
Table 7-5 RF Timeout Period Commands 7-39
Table 7-6 Input Inversion Enable/Disable Commands 7-40
Table 7-7 Report Option Commands 7-42
Table 8-1 Installation Accessory Kits 8-3
Table 8-2 Cabling Assignments for Colored Wire Pair Cable 8-4
Table 8-3 AC Transformer Connections for Colored Pair Wire Cable 8-13
Table 8-4 Low Voltage DC Cable Connections for the Colored Pair Wire Cable 8-14
Table 8-5 RS–232 Interface Signal Wiring for Colored Wire Pair Cable 8-19
Table 8-6 RS–422 Interface Signal Wiring for Colored Wire Pair Cable 8-21

Table 8-7 Wiegand Interface Signal Wiring for Colored Wire Pair Cable 8-22
Table 8-8 Sense Input/Output Cabling Assignments for Colored Wire Pair Cable 8-24
Table 9-1 Error Messages 9-3
Table 9-2 Symptoms and Remedies 9-5
Table C-1 Communications Interfaces and Conductors C-3
Table C-2 RS–232 Interface Signal Wiring for Colored Wire Pair Cable C-5
Table C-3 RS–232 Interface Signal Wiring for Alternate Wire Pair Cable C-5
Table C-4 RS–422 Interface Signal Wiring for Colored Wire Pair Cable C-6
Table C-5 RS–422 Interface Signal Wiring for Alternate Wire Pair Cable C-6
Table C-6 Wiegand Interface Signal Wiring for Colored Wire Pair Cable C-7
Table C-7 Wiegand Interface Signal Wiring for Alternate Wire Pair Cable C-7
Table C-8 AC Transformer Connections for Colored Pair Wire Cable C-7
Table C-9 AC Transformer Connections for Alternate Wire Cable C-8
Table C-10 Low Voltage DC Cable Connections for Colored Pair Wire Cable C-8
Table C-11 Low Voltage DC Cable Connections for Alternate Wire Cable C-8
Table C-12 Sense Input/Output Cabling Assignments for Colored Wire Pair Cable C-9
Table C-13 Sense Input/Output Cabling Assignments for Alternate Wire Cable C-11
Table C-14 All Cabling Assignments for Colored Wire Pair Cable or Alternate Wire Pair Cable C-12
Table D-1 SmartPass Default Configuration Settings D-3
Table D-2 SmartPass Commands Listed By Number D-5
Table D-3 SmartPass Commands Listed by Command Name D-13
Table E-4 Example meta keys and values E-4

1

Introduction

This chapter provides information on the audience, organization, document conventions, system description, and license information for the SmartPass system.

Introduction

This SmartPass System Guide provides site planning and testing, installing, and operating instructions for Amtech's SmartPass integrated reader system (SmartPass). Before you begin installing SmartPass, Amtech recommends that you read this entire manual. Also read the READ.ME file on the SmartPass software diskette included with your SmartPass Dealer Binder.

Audience

This document is intended to be used only by authorized SmartPass dealers, installers, and service personnel. Because SmartPass has no operator- or end-user-serviceable components or features, no end-user manual or operator guide exists. Once the system is set up and tested by the **authorized** installer, SmartPass operation requires no end-user intervention.

System Guide Organization

Chapter 1 - Introduction	Explains the audience for the guide, outlines the manual's organization, provides a brief description of the SmartPass system, and discusses FCC licensing requirements.
Chapter 2 - Developing the Site Plan	Discusses factors that should be taken into account when developing the site plan before ordering equipment and installing SmartPass. These factors include reader and tag alignment, site layout and traffic flow, and electrical and communications requirements.
Chapter 3 - Choosing, Installing, and Removing Tags	Provides information on compatible tag models and data formats, and gives procedures for installing tags onto and removing tags from vehicles that will be using the SmartPass facility.
Chapter 4 - Testing and Configuring SmartPass Before Installation	Provides procedures for testing and configuring SmartPass before permanently installing it at the site.

Chapter 5 - General Software Information and Chapter 6 - Communication Protocols	Present reference information on various software-related topics and communication protocols.
Chapter 7 - Commands	Discusses the host-transmitted commands that are used to control SmartPass configuration and operation.
Chapter 8 - Installing SmartPass	Lists the additional materials needed and procedures to install and fine-tune SmartPass. Steps include installing the SmartPass on a round pole or flat surface, connecting power and communications, and marking and adjusting the read zone.
Chapter 9 - Troubleshooting and Maintenance	Answers the most commonly asked questions about installing and maintaining the SmartPass system.
Appendix A - Glossary	Contains frequently used terms.
Appendix B - System Specifications	Provides the SmartPass system specifications.
Appendix C - Wiring Tables	Shows the wiring connections for the communications interfaces, AC cable connections, and the external interface signal wiring.
Appendix D - Command Quick Reference	Lists SmartPass factory default configuration settings and lists host software commands in numerical and alphabetical order.
Appendix E -Using Error Correcting Protocol	Provides helpful information for using Error Correcting Protocol.

Document Conventions

The following conventions are used in this document.

Bold	Indicates an item on a menu, screen, or dialog box
`Command`	Indicates a command

System Description

SmartPass consists of a power supply, a reader logic board (also called a tag decoder), a radio frequency (RF) transmitter/receiver (called the RF module), a patch antenna, and a check tag. These SmartPass components are contained in a highly reliable, compact, and easy-to-install package. Figure 1-1 shows the front and side views of a SmartPass.

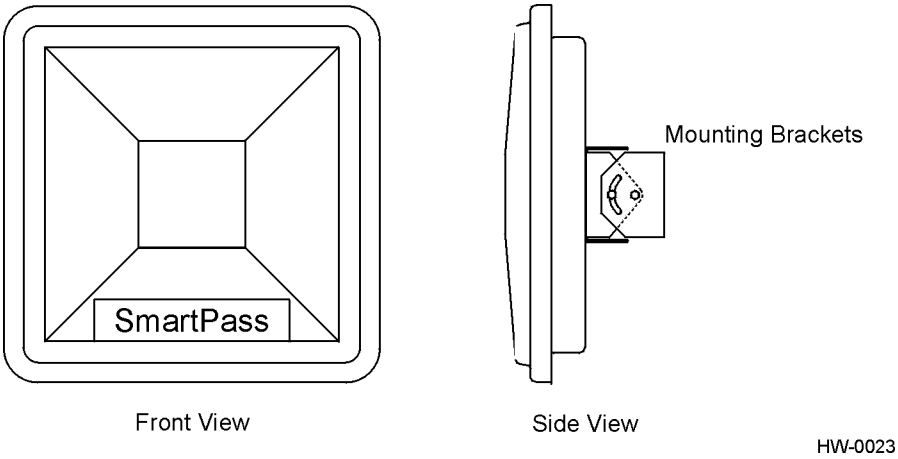

Figure 1-1 SmartPass Front and Side Views

SmartPass generates an RF signal that is reflected by an Amtech radio frequency identification (RFID) tag installed on a vehicle. The tag adds its programmed identification information to the signal and reflects the signal back to SmartPass. SmartPass receives and decodes the tag data carried by the reflected signal and transmits this data to a local host computer for processing.

License Requirements

SmartPass system users in the U.S. must obtain a license from the Federal Communications Commission (FCC). The authorized frequency band in the U.S. is 902 to 904 and 909.75 to 921.75 MHz.

The user is responsible for filing the FCC license according to FCC regulations, but the Amtech dealer should provide assistance and support as necessary to complete these forms. Forms and information for obtaining the license are located in the *SmartPass Dealer Binder.*

An FCC license provides the user with the legal authorization to operate SmartPass on the licensed frequencies at the site specified in the license. Only an authorized installer or service technician can set the SmartPass AI1620 series of readers' frequency to that specified in the FCC site license. No end-user-operated controls exist on these SmartPass models.

The FCC license also provides the user with protection and authorization to maintain the system should any other RFID product be used in the licensed area after your SmartPass equipment is installed.

2

Developing the Site Plan

This chapter discusses how to develop a site plan for installation of SmartPass.

Overview

Developing a site plan provides the foundation for the site's system design and establishes system configuration parameters such as the following:

- Number and general location of primary components
- Number of different RF frequencies required

This information is crucial before applying for FCC approval and ordering and installing SmartPass(es) and tags.

Also consider the following factors when developing this site plan:

- Reader and tag alignment
- Site layout and traffic flow
- SmartPass electrical requirements
- SmartPass communications requirements

These factors provide relevant information regarding each site's physical and electromagnetic environment and the conditions under which the system must perform.

Reader and Tag Alignment

The position of SmartPass and placement of the tag on the vehicle must be compatible. It is important to consider any existing tagged vehicles currently using the facility because you will need this information to determine the optimal SmartPass location at the site.

Note: *If any of the vehicles using your facility already have tags, such as those used in toll applications, contact Amtech at 1-800-923-4824 for information about mixed-tag installations before you plan tag type, location, and programming.*

Three primary criteria must be satisfied to achieve the highest read reliability:

- Polarization of the tag and SmartPass must be aligned in the same direction (both horizontal or both vertical).
- The installed tag must be in a direct, unobstructed line of sight to SmartPass.

- Tags designed to be mounted in a vehicle windshield must be mounted in the vehicle's windshield, and tags designed to be mounted on the metal surface of the vehicle must be mounted on the metal surface of the vehicle's exterior.

Tag read may not be reliable unless these criteria are met.

Polarization

Just as antennas are, tags are polarized (Figure 2-1).

Note: *Matching the tag and antenna polarization is critical to obtain optimal system performance*

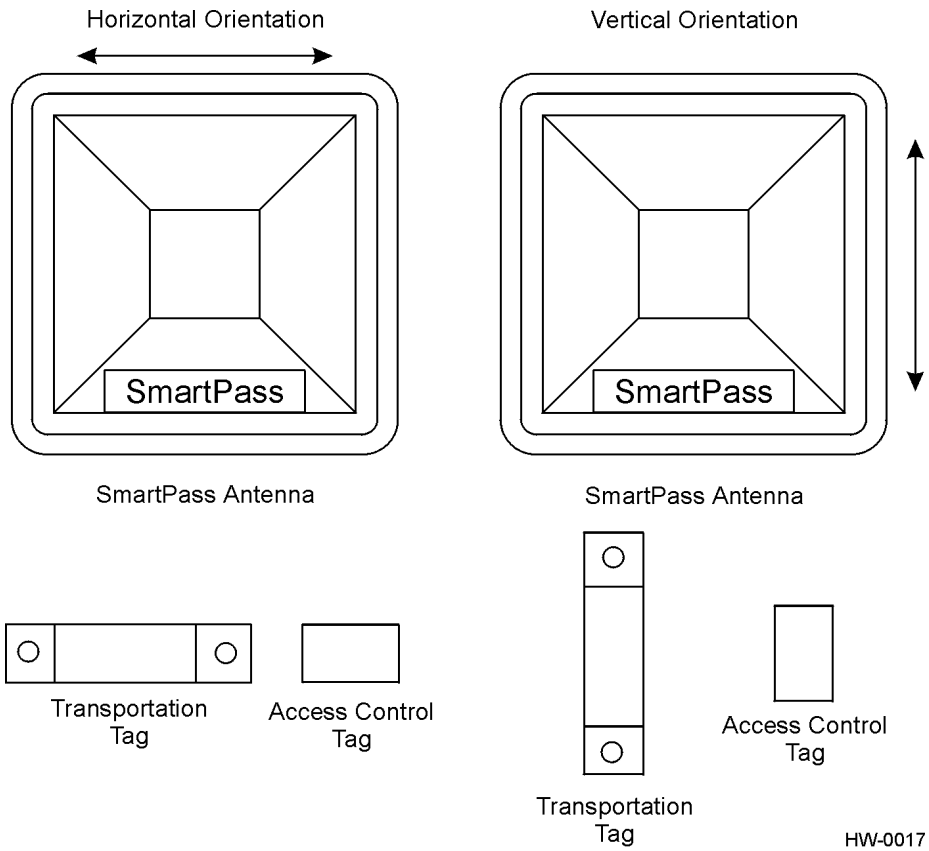

Figure 2-1 Tag Horizontal and Vertical Orientation

The polarization of the tag must be aligned in the same direction as the SmartPass reader, as shown in Figure 2-1. A horizontally oriented SmartPass cannot read a vertically oriented tag and vice versa. SmartPass polarization is set at the factory and vertical polarization of the reader, if required, must be a requested option on the purchase/sales order.

Unobstructed Line of Sight

For optimum readability, install SmartPass and the tag on the vehicle so that when the vehicle approaches SmartPass, the tag is directly facing the reader and the line of sight is clear between SmartPass and the tag. For example, if tags have been installed in vehicles to be read by SmartPass located on the driver's side curb, SmartPass mounted on the opposite curb cannot read the tags reliably. Likewise, if a fence or barrier is between the tag and SmartPass, SmartPass cannot reliably read the tags. Figure 2-2 illustrates correct and incorrect installation of a SmartPass in relation to a tag's mounting location on a vehicle.

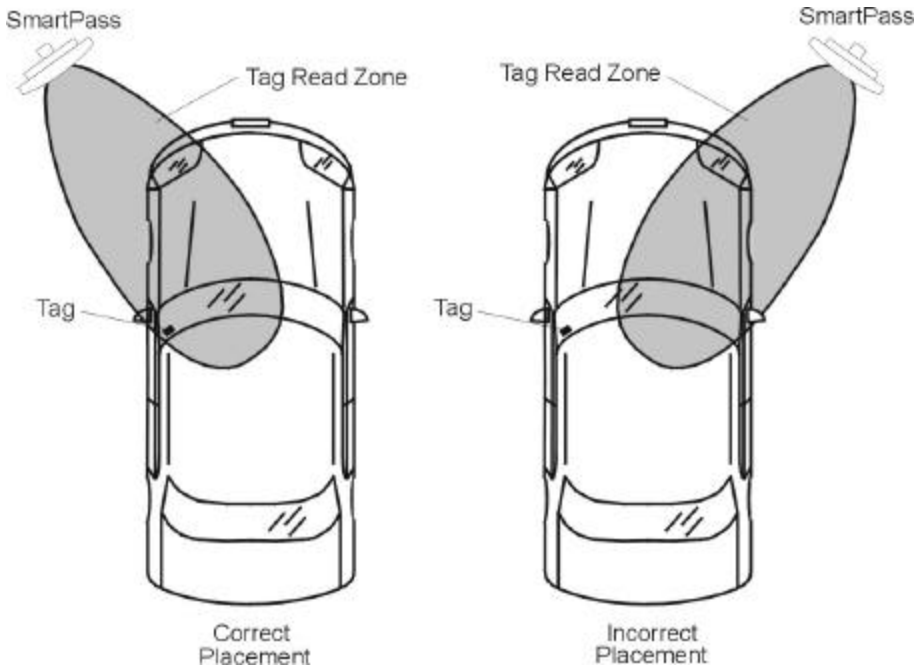

Figure 2-2 SmartPass Location Relative to Tag Position

If SmartPass is installed on the curb or wall on the driver's side (U.S.), tags should be installed on the driver's side of the vehicle as illustrated in Figure 2-3.

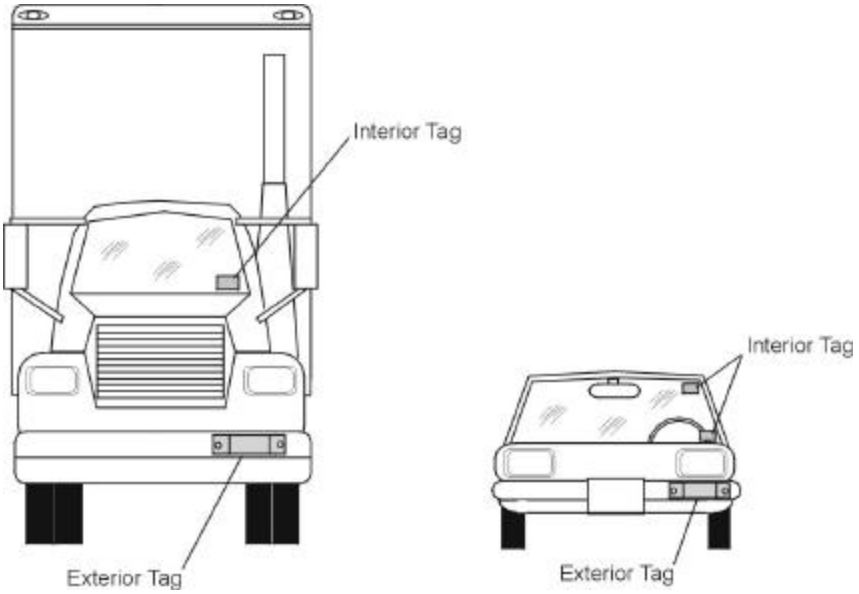

Figure 2-3 Typical Tag Positions for U.S. Driver's Side Reader

If SmartPass is installed on the passenger's side curb (U.S.), tags should be installed on the passenger's side of the vehicle as illustrated in Figure 2-4.

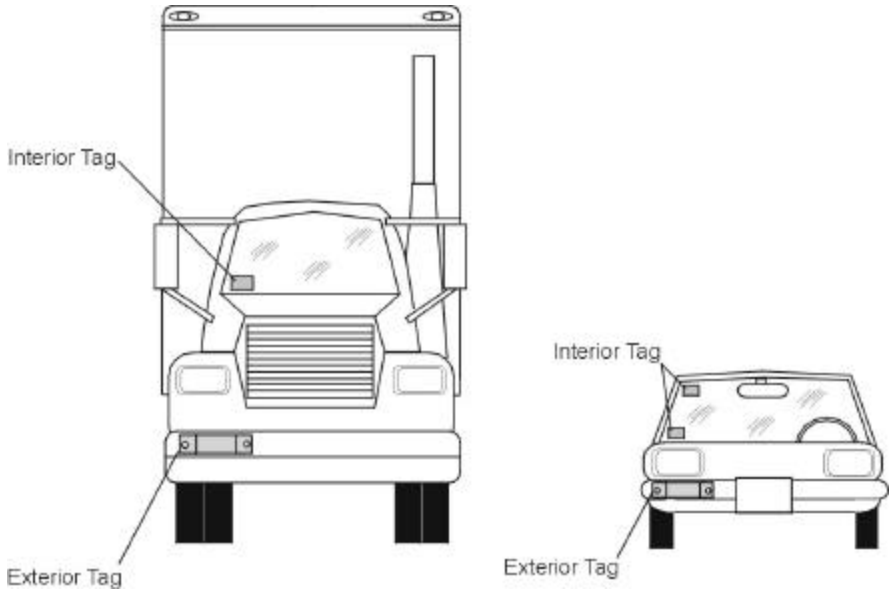

Figure 2-4 Typical Tag Positions for U.S. Passenger's Side Reader

If SmartPass is installed in an overhead location, tags should be installed in the center windshield in the top center area behind the rear view mirror or on the vehicle's front license plate or center bumper as illustrated in Figure 2-5.

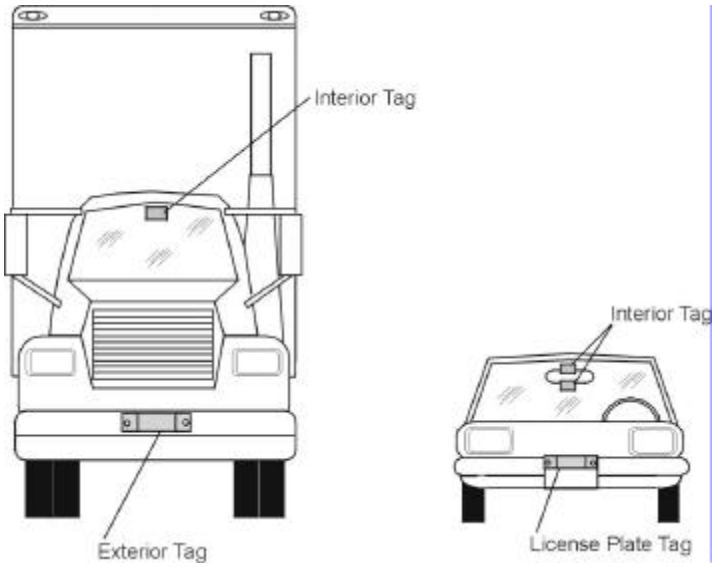

Figure 2-5 Typical Tag Positions for SmartPass Mounted Overhead

Note: *Metallized coatings on some vehicle windshields and windows shield the radio frequency energy emitted by SmartPass, and may cause tags to be misread. Always install tags on the exterior of vehicles having this type of window coating.*

Refer to Chapter 3 for more detailed information on tag positioning.

Site Layout and Traffic Flow

Site layout and traffic flow considerations are critical when determining SmartPass installation locations. These factors include the following:

- SmartPass read zone
- Other SmartPasses in the area
- Lane configurations
- Reflection, refraction, and diffraction of RF signals
- Existing signal interference at the site

SmartPass Read Zone

SmartPass must be able to read the tag data properly within a specified area, called the read zone, without reading other nearby tags or interfering with other SmartPasses at the site. The following are some of the factors that affect the size and shape of the read zone:

- Mounting method used (pole or wall mount)
- Height from the ground
- Indoor or outdoor location
- Range discrimination setting
- Other sources of interference and reflection

SmartPass must be positioned to allow the RF signal to travel to and return from the tags within the designated range and be placed in an area where it is not likely to be bumped out of alignment. If the antenna becomes misaligned or some nearby structure is added or removed, system operation can be seriously affected.

For instructions on setting the read zone, see “Marking the Read Zone” on page 8-14.

Other SmartPasses in the Area

Sites with more than one SmartPass in close proximity should be configured with a frequency separation of at least 6 MHz. If more than one SmartPass is in a side-by-side or multiple lane application, the frequencies should be staggered. Also, two SmartPasses will not operate accurately if they directly face each other.

Lane Configurations

Amtech recommends that traffic be guided through a controlled lane to obtain consistent accurate tag readings and to prevent damage to SmartPass. The following subsections describe some common lane configurations and give suggestions for positioning SmartPass within the controlled traffic flow.

Open Lane Configuration

An open lane configuration is one in which no center barrier separates two opposing traffic flows. Figure 2-6 illustrates a sample open lane configuration and SmartPass placement. This figure assumes that tags are mounted on the inside windshield on the ***passenger*** side (U.S.) of the vehicle.

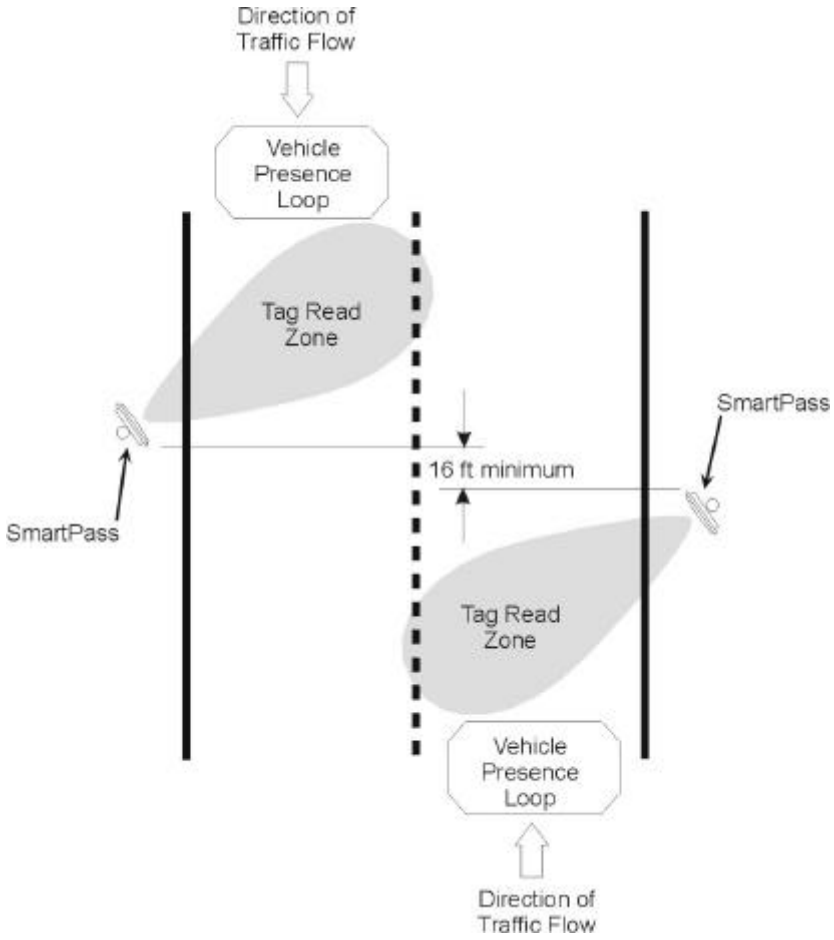

Figure 2-6 Open Lane Configuration

Another option for SmartPass placement in an open lane configuration is one in which SmartPass is mounted overhead in each lane as illustrated in Figure 2-7. This figure assumes that tags are mounted on the inside ***center*** windshield or center bumper of the vehicle.

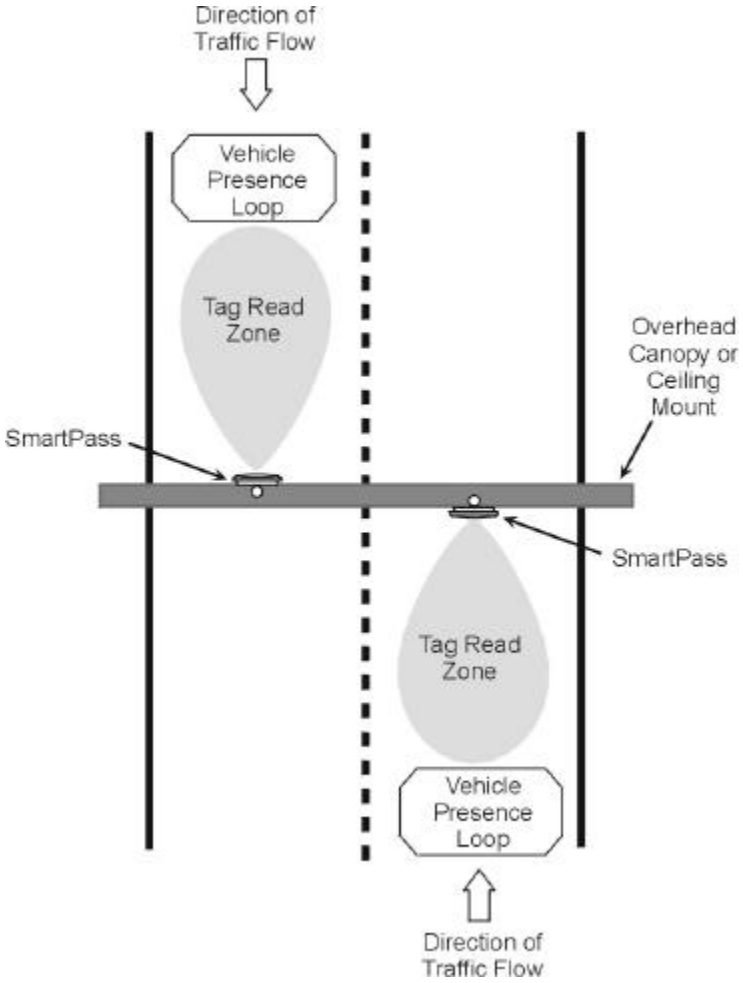

Figure 2-7 Overhead Open Lane Configuration

Gate with Center Island Configuration

Figure 2-8 illustrates a typical gate application with SmartPass units positioned on a center island to read tags mounted on the inside windshield on the driver's side (U.S.). The readers are placed to allow time for the gate to open so that the vehicle can roll through without stopping.

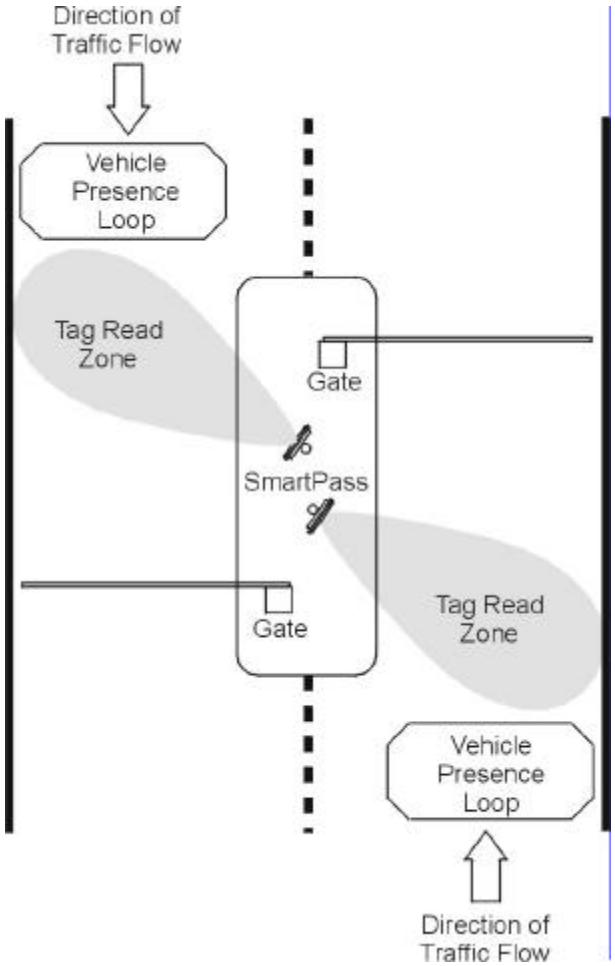

Figure 2-8 Gate Application with Center Island

Parking Garage with Ticket Island Configuration

Figure 2-9 illustrates a parking garage application with each SmartPass mounted on the ticket island to read tags mounted on the inside windshield on the driver's side (U.S.) or on the front vehicle bumper. SmartPass is placed to require the vehicle to stop before the gate opens.

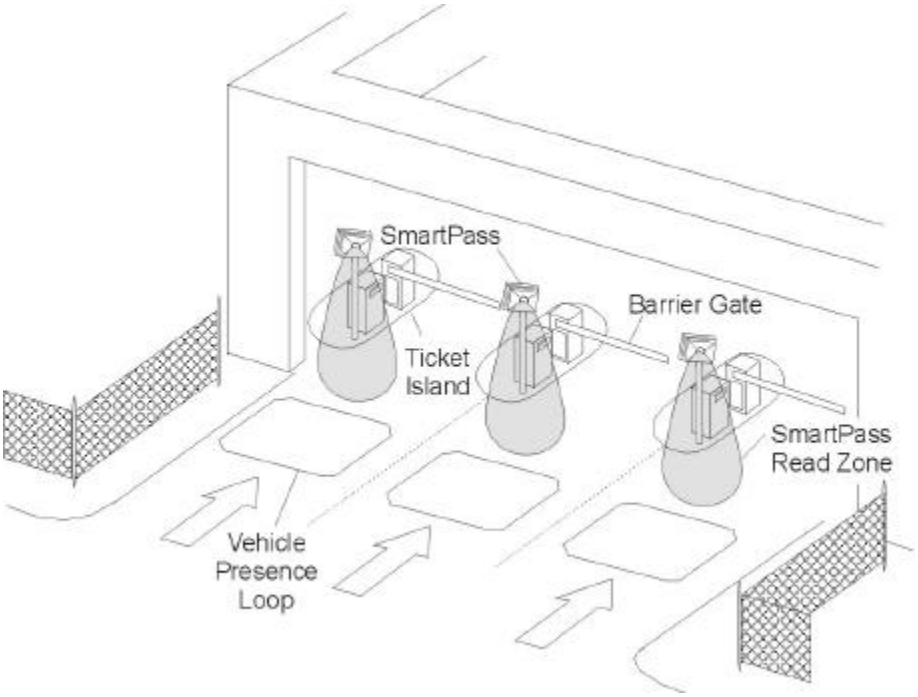

Figure 2-9 Parking Garage Application

Reflection, Refraction, and Diffraction of RF Signals

RF signals can be reflected, refracted, or diffracted by metal objects, walls, and even wet pavement or ice. Any of these effects can alter or degrade system performance. When designing your site plan, you must consider permanent structures and transient factors in the vicinity that may affect RF signals being generated by SmartPass. Permanent structures include buildings, chain link fences, guard shacks, and gates. Transient factors include passing traffic and local weather conditions such as rain or snow. Symptoms of these effects would include reading tags that are out of the desired read zone, or cross-lane reads.

The most common RF reflectors are metallic surfaces. RF signals may be partially reflected by nonconducting materials such as dirt, wood, ice, asphalt, and concrete. When nonconducting materials in the system environment become wet, they increase reflection of RF signals.

SmartPass mounting location, aiming, range control adjustment, discussed in Chapter 8, and use of presence detectors can reduce interference from RF reflections. When these actions cannot adequately control reflections, other techniques such as shielding, absorbing, range sensitivity adjustment, or barriers can also be used. See Chapter 9.

Existing Interference

Interference from RF and electrical sources can degrade system performance and must also be considered in the site design. Fluorescent lights, neon signs, nearby radio stations, or power lines can interfere with the optimal operation of the system. The magnetic impulse noise from relays that control gate opening and closing can also disrupt the RF signal.

Existing interference at the site may be shielded, removed, or positioned further from the SmartPass. In some cases, changing the operating frequency of the SmartPass may provide a simple solution. See Chapter 9.

Electrical and Communications Requirements

All construction work at the site must be completed before installing SmartPass. Electrical and communications cables should be installed according to all applicable local and federal building code requirements. Specific instructions to position and install SmartPass are in Chapter 8.

Junction Box

A watertight junction box meeting applicable local and national building codes is recommended for connecting SmartPass power and communications wiring. Amtech recommends a NEMA Type-4 junction box with a back panel. The junction box will house the terminal strip for communications and power connections.

Power and Communications Cable

The appropriate cable length for power and communications depends on the physical characteristics of SmartPass installation site. Table 2-1 lists accessory kits available for cabling options based on your site's requirements.

Table 2-1 Connector Cabling Accessory Kits

Part Number	Description
58-1620-001	5-ft connector cable
58-1620-002	20-ft connector cable
20-1620-003	Connector kit only
56-1620-004	13-Pair cable (1-ft lengths)
76-1620-005	110 V AC to 18 V AC Class C transformer
76-1620-006	12 V AC to 18 V AC step-up transformer

Electrical Power

A dedicated electrical power supply must be present at the site and be available to SmartPass at all times. The power must be 16–28 V DC or 16–20 V AC. A step-down transformer is available (North America only) to convert a 120 V AC duplex wall outlet with ground to 18 V AC, or a step-up transformer to convert a low-voltage 12 V AC outlet to 18 V AC. Consult your local and national electrical codes for installation and safety requirements.

Note: *SmartPasses installed outside North America will require a locally supplied transformer.*

If 18 V DC or 18 V AC power is available, the transformer option will not be necessary.

Amtech offers a Class C transformer accessory kit (part number 76-1620-005) for sites where 110 V AC is available. It is the installer's responsibility to supply conversion equipment and wiring for other voltages. Table 2-2 contains power supply current requirements.

Table 2-2 Power Supply Current Requirements

Supply	Worst Case Maximum Current at 68°F (20°C)	Standby Operating Current at 68°F (20°C)
16 to 20 V AC	800 mA at 18 V AC	400 mA at 18 V AC
16 to 28 V DC	800 mA at 18 V DC	400 mA at 18 V DC

Power circuits are protected internally against power surges.

Power Extension

Measured voltage at SmartPass must be at least 16 V for proper operation. Use Table 2-3 to determine the correct cable size for the necessary cable length. The table is an approximation.

Note: *If close to the maximum length, measure voltage at SmartPass to ensure it does not drop below 16 V.*

Table 2-3 Cable length from Amtech-Supplied 110 V AC to 18 V AC Transformer to AI1620 SmartPass

Cable Size (AWG)[a]	24	22	20	18	16	14	12
Maximum DCR (Ohms per foot at 68° F)[b]	0.0270	0.0175	0.0109	0.0069	0.0044	0.0027	0.0017
Maximum length (feet)	29.63	45.71	73.39	115.61	183.91	293.04	467.84
Maximum length (feet)[c]	25	39	62	98	156	249	398
When used to extend Amtech 5-ft cable (feet)	23	36	57	90	143	227	363
When used to extend Amtech 20-ft cable (feet)	14	22	35	55	88	140	224

a. Use two conductors each for 18 V and 18 V return (4 conductors total).
b. DCR information is from Belden catalog.
c. Calculated length is reduced by -15% to adjust for other variables such as connector contact resistance. Length variable factor is 85%; maximum current drawn by AI1620 is 2.5; maximum allowable voltage drop from the 18 V AC transformer secondary is 2.

Host Communications

Your site design must include communications between SmartPass and a host computer. SmartPass communicates with the host computer through an asynchronous serial line or through a Wiegand interface. This serial line can be an RS–232 interface or an RS–422 interface. The host computer must be able to accept one of the interfaces shown in Table 2-4.

Table 2-4 Communications Interfaces and Conductors

Interface	Number of Conductors
RS–232	3
RS–232 with RTS and CTS hardware and handshake signals	5
RS–422	4
Wiegand	3

Communications circuits are protected internally against power surges.

Select one of the following communications interfaces based on the specific needs of your site.

RS–232 Interface

Use an RS–232 interface if one or more of the following items apply to your site:

- The host computer system is 50 ft (15.2 m) or less from SmartPass.
- The host computer system is more than 50 ft (15.2 m) from SmartPass, and a pair of RF modems or limited distance modem/line drivers over copper wire are used for communications between SmartPass and the host. The distance from the RF modem to SmartPass should not exceed 50 ft (15.2 m).
- Other common communications devices that use RS–232 have been selected, such as fiber optics.

RS–422 Interface

Use an RS–422 interface if one or more of the following items apply to your site:

- The host computer is more than 50 ft (15.2 m) from SmartPass.
- The host computer has an external limited-distance modem.

The standard RS–422 connection maximum distance depends on the baud rate, cable type, and the RS–422 device at the other end.

Wiegand Interface

SmartPass can interface with equipment requiring the Wiegand +5 V DC data0-data1-ground interface. It does so using the Wiegand interface included with the RS–232 or RS–422 option.

Note: *SmartPass comes from the factory with both the RS–232 or RS–422 option AND Wiegand. If you wish to use Wiegand, you must first connect SmartPass using the RS–232 or RS–422 interface, set SmartPass's configuration to Wiegand, and then connect SmartPass using the Wiegand interface.*

Note: *You must order tags programmed with Wiegand-formatted data when using a Wiegand-compatible reader.*

Input/Output Circuits

To connect SmartPass to external equipment such as a treadle or traffic control light, install wires from these devices at the junction box. SmartPass input circuit is designed to connect to a dry contact closure. SmartPass output circuits are single-pole, double-throw relays providing dry contact closures. These contacts are rated at 42.2 V AC peak, or 60 V DC, at 1 A maximum.

Output circuits are not intended for the direct control of electromechanical devices such as motorized gates and barrier arms. For such applications, the SmartPass output circuits should be used to drive a secondary, appropriately rated high-power relay.

3

Choosing, Installing, and Removing Tags

This chapter describes the various tag types compatible with the AI1620 SmartPass and gives procedures for installing and removing internal and external tags.

Tag Types

Amtech offers numerous tag models and four tag data formats to complete your SmartPass system. The information in the next subsection will assist you in determining the correct tag model and tag data format for your system.

Tag Models

Access control tags are laser-etched with the tag model number and date of manufacture and factory-programmed tag data. Table 3-1 lists most tag models that can be used in parking and access control applications. Use this table as a guide to help determine which type(s) of tags will be best suited for your specific site's requirements.

Table 3-1 Tag Configuration Guidelines

Tag Model Number	TagType	Power Source	Number of 6-Bit ASCII Characters	Number of 128-Bit Frames	Number of Wiegand Bits	Special Features
AT5100	Toll	Beam	20	1	N/A	915 MHz, thin case, non-metal window install
AT5102	Access control	Beam	10	1/2	25 to 54	915 MHz, thin case, non-metal window install
AT5105	Access control	5-yr battery	10	1/2	25 to 54	Multifrequency, thin case, non-metal window install
AT5106	Access control	10-yr battery	10	1/2	25 to 54	Multifrequency, sealed case, non-metal window install or non-metal external install
AT5107	Access control	10-yr battery	10	1/2	25 to 54	Multifrequency, sealed case, metal external install

Table 3-1 Tag Configuration Guidelines

Tag Model Number	TagType	Power Source	Number of 6-Bit ASCII Characters	Number of 128-Bit Frames	Number of Wiegand Bits	Special Features
AT5110	Trans-portation	Beam	20	1	N/A	915 MHz frequency, metal external install
AT5112	Access control, transpor-tation	Beam	10	1/2	25 to 54	915 MHz frequency, metal external install
AT5114	Access control, transpor-tation	10-yr battery	10	1/2	25 to 54	Multifrequency, metal external install
AT5125	Trans-portation	Beam	20	1	N/A	915 MHz frequency; high-temperature chemical-resistant case, metal external install
AT5140	Toll	10-yr battery	20	1	N/A	915 MHz frequency, license plate install
AT5145	Toll	Beam	20	1	N/A	915 MHz frequency, license plate install
AT5146	Access Control	Beam	10	1/2	25 to 54	915 MHz, license plate install
AT5147	Access Control	10-yr battery	10	1/2	25 to 54	915 MHz, license plate install
AT5510	Trans-portation	10-yr battery	20	1	N/A	Multifrequency, metal external install
AT5544	Toll	10-yr battery	20	1	N/A	Multifrequency, sealed case, non-metal window or external install

Table 3-1 Tag Configuration Guidelines

Tag Model Number	TagType	Power Source	Number of 6-Bit ASCII Characters	Number of 128-Bit Frames	Number of Wiegand Bits	Special Features
AT5545	Toll	10-yr battery	20	1	N/A	Multifrequency, sealed case, metal external install
AT5547	Toll	5-yr battery	20	1	N/A	Multifrequency, thin case, non-metal window install
AT5704	Trans-portation	External	4608	256	N/A	Multifrequency, dynamic tag, metal external install
AT5707	Trans-portation	8-yr battery	40[a]	2	N/A	915 MHz frequency, dynamic tag, metal external install

a. If desired, in place of forty 6-bit ASCII characters, the AT5707 can support up to thirty-four 7-bit ASCII characters.

Reader/Tag Interoperability

Table 3-2 lists the various SmartPass reader models and the tags that are read by them. Refer to this table to be sure that you have chosen the correct tag(s) for your system.

Table 3-2 Reader/Tag Interoperability

Reader	Beam Tags	Battery Tags
AI1620-100	AT5100; AT5102; AT5110; AT5112; AT5125; AT5145; AT5146; AT5715	AT5105; AT5114; AT5140; AT5147; AT5510; AT5540; AT5541; AT5542; AT5543; AT5544; AT5545; AT5547; AT5704; AT5707
AI1620-101	AT5100; AT5102; AT5110; AT5112; AT5125; AT5145; AT5146; AT5715	AT5105; AT5114; AT5140; AT5147; AT5510; AT5540; AT5541; AT5542; AT5543; AT5544; AT5545; AT5547; AT5704; AT5707
AI1620-102	AT5100; AT5102; AT5112; AT5146	AT5105; AT5114; AT5147
AI1620-103	AT5100; AT5102; AT5112; AT5146	AT5105; AT5114; AT5147

Table 3-2 Reader/Tag Interoperability

Reader	Beam Tags	Battery Tags
AI1620-104	AT5100; AT5102; AT5110; AT5112; AT5125; AT5145; AT5146; AT5715	AT5105; AT5114; AT5140; AT5147; AT5510; AT5540; AT5541; AT5542; AT5543; AT5544; AT5545; AT5547; AT5704; AT5707
AI1620-105	AT5100; AT5102; AT5110; AT5112; AT5125; AT5145; AT5146; AT5715	AT5105; AT5114; AT5140; AT5147; AT5510; AT5540; AT5541; AT5542; AT5543; AT5544; AT5545; AT5547; AT5704; AT5707

Tag Data Formats

Tags are programmed at the Amtech factory with the tag model number, date of manufacture, and data format. Consult the special order entry procedures in your *SmartPass Dealer's Guide* for ordering the format that applies to your system. The following four tag data formats can be used:

- 10-character alphanumeric ASCII — Four alphanumeric characters are fixed and can be used to identify either the dealer or the user. The remaining six positions are numeric and should be unique for each tag issued. For example, the entry ACME000001 might be specified as the first tag on the SmartPass order entry form from ACME Parking Garage.
- 20-character alphanumeric ASCII — Four alphanumeric characters are typically fixed and the remaining sixteen positions are numbered sequentially.
- Wiegand — Tags can be programmed in Wiegand formats with 25 to 54 bits. If you choose this format, complete a Wiegand format worksheet — attached to the SmartPass order entry form — indicating the data to be programmed into the tags.

Note: *Only access control tag models can be Wiegand-formatted. See* Table 3-1 on page 3-3 *for Wiegand-compatible tag models.*

- AAR/ISO — For requirements for this format, refer to ISO 10374 and the most recent version of *Association of American Railroads Standard for Automatic Equipment Identification.*

Installing Interior Tags

Interior tags are used in those applications requiring tags that can be moved from one vehicle to another. Interior tags are installed using hook-and-loop material or double-sided tape attached to the tag and to the windshield. When using hook-and-loop material, the loop material should be applied to the back of the tag and the hook material should be applied to the windshield. After the tag is installed, it can be easily

removed and used in any vehicle that has corresponding hook material affixed to the windshield.

Note: *Installing interior tags using double-sided tape results in a semipermanent attachment; then the tag will be more difficult to remove than one installed using hook and loop material.*

Interior tags may be ordered from the factory with hook-and-loop material or double-sided tape already applied to the tag. The adhesive on this material is specially formulated for temperature extremes inside vehicles.

Materials Required

You will need the following materials to install interior tags:

- Rubbing alcohol or 50/50 isopropyl alcohol and water
- Sponge and dry cloth
- Interior tags with two strips of factory-installed hook-and-loop material attached or factory-installed double-sided tape

Tag Positioning

Interior tags can be installed on the driver's side, passenger's side, or upper center of the vehicle's windshield, depending on SmartPass's position. See "Reader and Tag Alignment" on page 2-3.

Tags should be mounted consistently in all vehicles using a particular SmartPass facility.

Interior Driver's or Passenger's Side

Interior tags are designed to be installed inside the vehicle, typically on the driver's side of the windshield. Install the tag in either the upper or lower corner, as long as it is at least 2 in. (5 cm) from the metal window post, as shown in Figure 3-1.

.

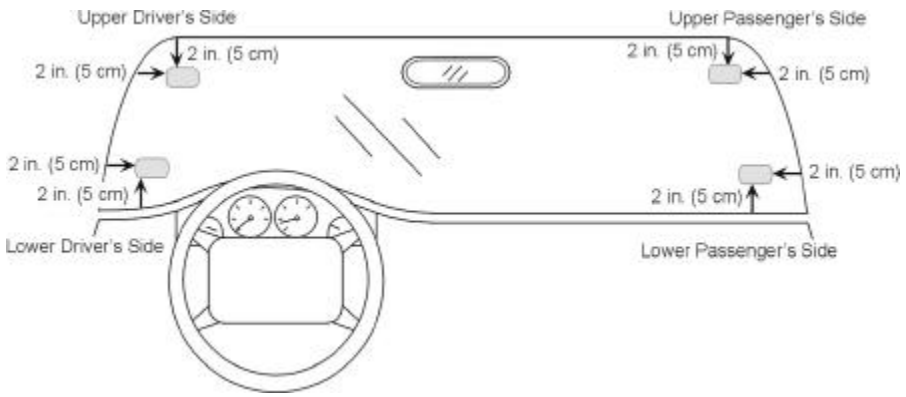

Figure 3-1 Driver's or Passenger's Side (U.S.) Interior Windshield Tag Location

Interior Center Windshield

Access control tags may also be installed on the upper center portion of the windshield. Position the tag as close as possible to the windshield's upper center, behind the rearview mirror. The top edge of the tag should be approximately 1 in. (2.5 cm) below the base of the mirror, or above the base if enough room is available for the tag to be 2 in. from the metal around the windshield, as shown in Figure 3-2.

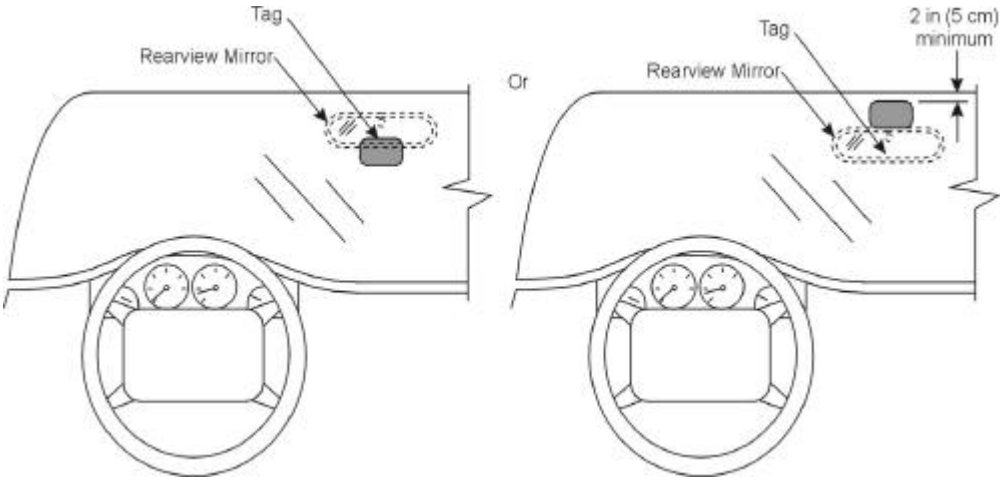

Figure 3-2 Upper Center Interior Windshield Tag Location

Installation Procedures

Perform the steps below to install interior tags:

1. Clean the tag installation area on the interior surface of the windshield with rubbing alcohol.
2. Dry the area thoroughly using a clean, dry cloth.

3. Remove the clear backing from the two strips of hook-and-loop material on the back of the tag (Figure 3-3) or from the double-sided tape.

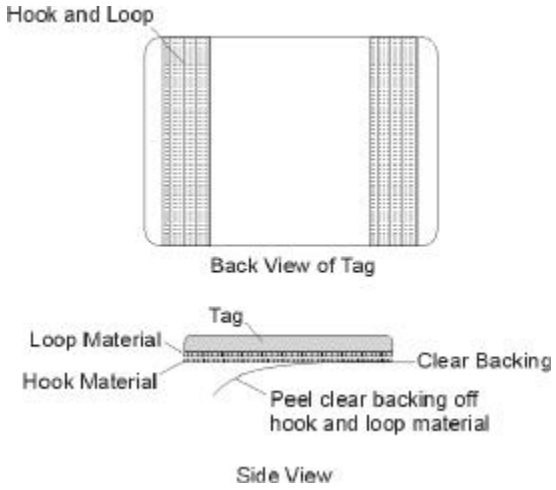

Figure 3-3 Hook-and-Loop Material on Interior Tag

4. Position the tag over the correct area of the windshield, making sure that the tag and SmartPass orientation are the same (horizontal or vertical).
5. Press the tag firmly against the glass.

Removing Interior Tags

To remove an interior tag installed using hook-and-loop material, simply pull the tag away from the windshield.

To remove an interior tag installed using double-sided tape, slowly pry off the tag with a thin tool, such as a putty knife.

Installing Exterior Tags

Exterior tags are used in applications that require tags to remain affixed to one vehicle using semipermanent installation methods, and for vehicles with metallized coatings on their windshields and windows.

Metallized coatings on some vehicle windshields and windows absorb the RF energy emitted by SmartPass, thus causing tags to be misread. Use either license plate or bumper installation techniques to install tags on the exterior of vehicles that have this type of window coating.

Note: *The read zone of an overhead SmartPass should be adjusted accordingly when an exterior tag is installed on a license plate, or the read zone will be reduced.*

Exterior tags may be installed on metal or plastic bumpers depending on the tag model, using pop rivets or screws.

Materials Required

Exterior tags need to be installed on a relatively flat surface. You will need the following materials to install exterior tags:

- Rubbing alcohol, or 50/50 isopropyl alcohol and water, or solvent/cleaner for metal
- Sponge and dry cloth
- Exterior tags with the double-sided adhesive tape attached or exterior tags and blind rivets if using blind rivet installation

Tag Positioning

Some access control tags, such as model AT5114, are designed to be installed on a truck bumper, as shown in Figure 3-4. Other access control tags, such as models AT5146 and AT5147, are designed to be installed on the vehicle's license plate, also shown in Figure 3-4.

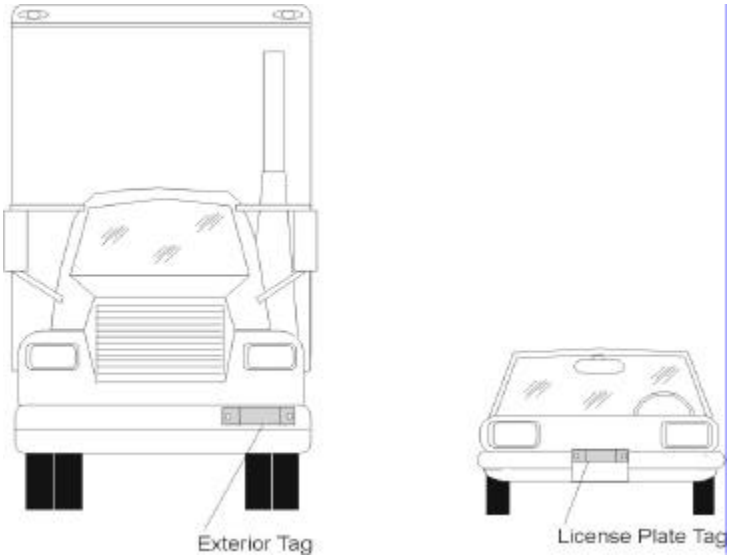

Figure 3-4 Ideal Exterior Tag Locations

Installation Procedures Using Tape

Perform the following steps to install the tag on a metal or plastic bumper:

1. Clean and degrease the tag installation area of the vehicle bumper with solvent/cleaner.
2. Dry the area thoroughly using a clean, dry cloth.
3. Remove the backing from the double-sided tape on the back of the tag, as shown in Figure 3-5.

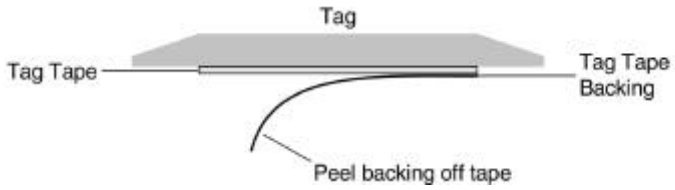

Figure 3-5 Exterior Tag with Double-Sided Tape

4. Position the tag over the installation area, making sure that the tag and SmartPass orientation are the same (horizontal or vertical).
5. Press the tag firmly against the bumper.

Installation Procedures Using Blind Rivets

Follow the steps below to install an exterior tag using blind rivets through the tag's installation tabs:

1. Position the tag on the bumper in the installation area and mark the hole positions of the tag's installation tabs onto the bumper.
2. Follow the rivet manufacturer's instructions to drill holes in the bumper for rivets.
3. If the rivet head is smaller than the tag installation holes and can be pulled through the holes, use a small washer to secure the rivet through the tag.

Removing Exterior Tags

To remove an exterior tag installed with rivets, follow the rivet manufacturer's instructions to remove the rivets.

4

Testing and Configuring SmartPass Before Installation

This chapter provides instructions for testing and configuring SmartPass. These tasks are best performed before you permanently install SmartPass at the site. The chapter includes the following information:

- Materials needed to perform the test and configure SmartPass
- How to use an audible circuit tester to confirm that SmartPass has power, is communicating with the host software, and can read a tag presented in the tag read zone
- How to use the SmartPass Host v2.01 on the SmartPass software diskette (DL.EXE) to check the SmartPass factory configuration defaults and change the configuration parameters, if necessary

Materials Required

You will need the following materials to test and configure SmartPass. Amtech supplies some of the materials; other materials must be obtained from other sources.

Materials Supplied

Your SmartPass is packaged with the following materials. Ensure that you have received all parts before beginning your pre-installation SmartPass tests.

- One SmartPass
- One mounting bracket and mounting hardware

Cable Supplied

SmartPass may be ordered (as a separate accessory) with a multiwire cable, which is a 13-pair pigtail. The 13-pair pigtail is a colored wire pair cable, with different colors denoting the individual pairs, one pair of which is red/black.

In some instances, an alternate 15-pair pigtail may be substituted. The alternate cable is a red/black wire pair cable, with numbers on the pairs to denote the individual pairs. Two pairs of the 15-pair pigtail, numbers 14 and 15, are not used. Refer to Appendix C for alternate cable wiring diagrams.

Additional Materials Needed

You will need these additional materials to perform the two tests on SmartPass:

- One step-down transformer or other suitable low voltage power source
- SmartPass software diskette, which is supplied to Amtech dealers and distributors, or any terminal program running on a PC
- PC or laptop with 1.44 MB floppy disk drive, MS DOS, RS–232 serial port, and a communications cable with a DB9 or DB25 connector
- Two test tags, supplied by the Amtech dealer or distributor
- Communications cable to connect to the COM1 or COM2 port on your PC
- Suitable 18 V AC or 18 V DC power wiring for the SmartPass
- Audible circuit tester and 9 V DC battery for circuit tester power
- Wire stripper
- Printer (optional) to print out the READ.ME file from the download software diskette

Testing Using an Audible Circuit Tester

Testing with an audible circuit tester will confirm that your SmartPass has power, has the software downloaded properly to it, is communicating with the host software, and can read a tag presented in the read zone.

An audible circuit tester is also called a buzz box. These boxes are available at some electronic parts supply stores, or you can make a buzz box, as shown in Figure 4-1.

The buzz box is powered by a 9 V DC battery and is equipped with two alligator-clip leads. When you touch the leads together, the box makes an audible sound.

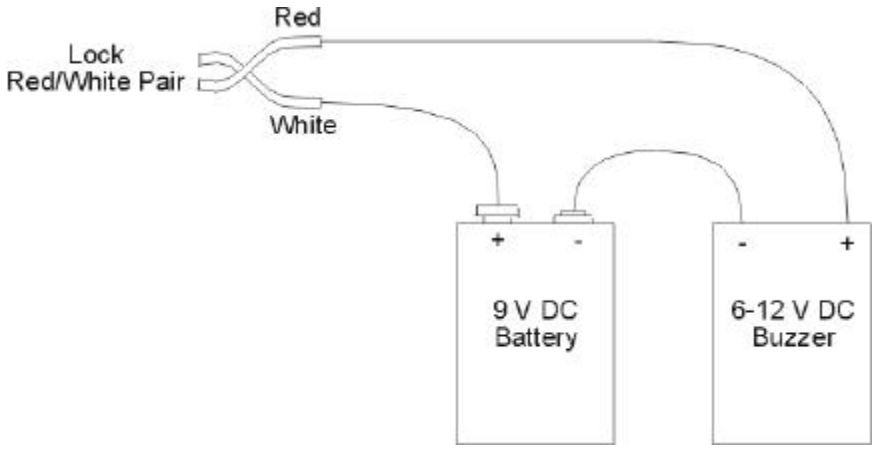

Figure 4-1 Wiring for Audible Circuit Tester

To test SmartPass, connect the power supply as described in the appropriate section below, and then test as described in the section “Testing SmartPass” on page 4-6.

Connecting the AC Power Supply

To connect SmartPass to a low-voltage AC power supply, perform the following steps.

1. Connect the SmartPass power wires from the cable to the transformer using the color coding as described in Table 4-1.

Table 4-1 AC Transformer Connections for Colored Pair Wire Cable

Signal From SmartPass	Colored Pair Wire Cable		Connect to Transformer Terminal Strip
	Wire Pair from SmartPass	Color Used	
Main power input	Brown/Red and Orange/Red	Orange and Brown	L1
Main power return		Red and Red	L2

2. Complete the power connections at the power supply.

Connecting the DC Power Supply

To install SmartPass using low voltage DC connections, use the connection designations shown in Table 4-2.

Table 4-2 Low Voltage DC Cable Connections for the Colored Pair Wire Cable

Signal from SmartPass	Colored Pair Wire Cable		Connection Use
	Wire Pair from SmartPass	Color Used	
Main power input	Brown/Red and Orange/Red	Orange and Brown	16 to 28 V DC + terminal
Main power return		Red and Red	16 to 28 V DC – terminal

Testing SmartPass

To test that SmartPass has power and can read a tag presented in the read zone, perform the following steps.

1. Connect the two leads from the audible circuit tester to the white and red wire pair (pair #8, lock/lock return) from the SmartPass cable.
2. Twist the red and green wire pair (pair #9, sense input0/sense input0 return) from the SmartPass cable to turn on a continuous RF signal.
3. Pass a tag in front of SmartPass. The audible circuit tester should sound a tone when the tag is read.
4. Disconnect the circuit tester from SmartPass.

Note: *You will need the audible circuit tester again to determine the read zone when installing SmartPass at the site.*

Configuring SmartPass

After testing SmartPass, you will need to configure its operating parameters before permanently installing it at the site. Two methods are available for configuring SmartPass:

- Use a PC and terminal emulation software to enter the host commands. (Terminal settings should be initially set at 9600 baud, 8 data bits, no parity, 1 stop bit, and flow control = none)
- Use a PC and SmartPass Host, provided on the Amtech SmartPass software diskette.

Connecting SmartPass to the PC

This section contains instructions for connecting RS-232, RS-422, and Wiegand communications between SmartPass and the PC. Each section contains wiring instructions and pin assignments followed by step-by-step connection procedures.

Using a RS-232 Interface

This section contains instructions for connecting SmartPass to a PC using an RS–232 interface. RS–232 interface signals are supplied by five wires from the SmartPass communications cable. The pin assignments for the signal to the host for male DB9 and DB25 connectors are shown in Figure 4-2.

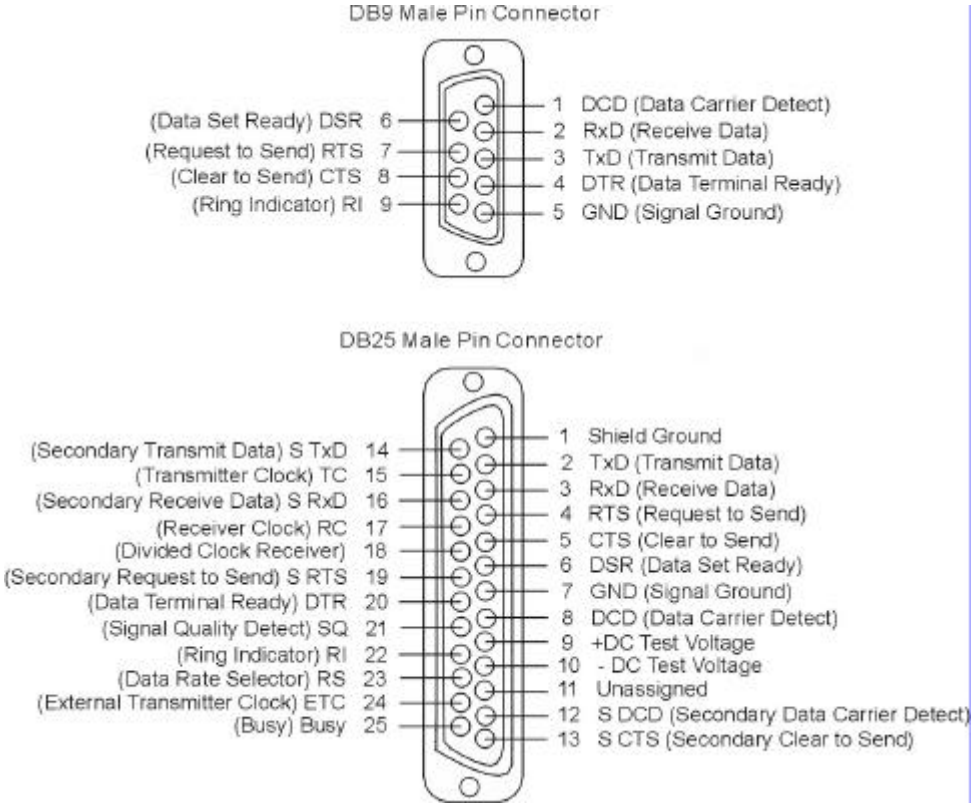

Figure 4-2 DB9 and DB25 Connector Pin Assignments for Signal to Host

Connecting Colored Wire Pair Cable

Table 4-3 shows the RS-232 colored wire assignments.

Table 4-3 RS–232 Interface Signal Wiring for Colored Wire Pair Cable

Signal from SmartPass	Colored Pair Wire Cable: Wire Pair from SmartPass	Colored Pair Wire Cable: Color Used	Connect Wire to Host DB9 Pin	Connect Wire to Host DB25 Pin
TxD — SmartPass output	Red/Black	Black	Pin 2	Pin 3
RxD — SmartPass input		Red	Pin 3	Pin 2
Signal ground	Yellow/ Black	Yellow or black	Pin 5	Pin 7
Optional for hardware handshaking				
RTS — SmartPass output	Yellow/Red	Yellow	Pin 8	Pin 5
CTS — SmartPass input		Red	Pin 7	Pin 4

To connect the interface, perform the following steps.

1. Connect the black wire (transmit data) from the red and black SmartPass wire pair to pin 2 of the DB9 connector or pin 3 of the DB25 connector.
2. Connect the red wire (receive data) from the red and black SmartPass wire pair to pin 3 of the DB9 connector or pin 2 of the DB25 connector.
3. Connect either the yellow or black wire (logic ground) from the yellow and black SmartPass wire pair to pin 5 of the DB9 connector or pin 7 of the DB25 connector.
4. Plug the DB9 connector or DB25 connector into the PC.

If the host is set up for hardware handshaking, use the following procedures.

5. Connect the yellow wire (RTS) from the yellow and red SmartPass wire pair to pin 8 of the DB9 connector or pin 5 of the DB25 connector.
6. Connect the red wire (CTS) from the yellow and red SmartPass wire pair to pin 7 of the DB9 connector or pin 4 of the DB25 connector.

Using RS-422 Interface

This section contains instructions for connecting SmartPass to a PC using an RS–422 interface. RS–422 interface signals are supplied by four wires from the SmartPass communications cable. Your host must have an RS–422 interface with either an internal or external converter.

Connecting Colored Wire Pair Cable

Table 4-4 shows the RS-422 colored wire assignments.

Table 4-4 RS–422 Interface Signal Wiring for Colored Wire Pair Cable

Signal from SmartPass	Colored Pair Wire Cable: Wire Pair from SmartPass	Colored Pair Wire Cable: Color Used	Connect to Signal from Host
RS–422 Transmit positive	Yellow/Red	Yellow	Receive (+)
RS–422 Transmit negative		Red	Receive (–)
RS–422 Receive positive	Red/Black	Black	Transmit (+)
RS–422 Receive negative		Red	Transmit (–)

To connect the interface, perform the following steps.

1. Connect the yellow wire (transmit +) from the yellow and red SmartPass wire pair to the host receive (+) signal.

   Connect the red wire (transmit –) from the yellow and red SmartPass wire pair to the host receive (–) signal.

2. Connect the black wire (receive +) from the red and black SmartPass wire pair to the host transmit (+) signal.
3. Connect the red wire (receive –) from the red and black SmartPass wire pair to the host transmit (–) signal.

Using Wiegand Interface

This section contains instructions for connecting SmartPass to a PC using a Wiegand interface. Wiegand interface signals are supplied by three wires from the SmartPass communications cable.

SmartPass with RS–232 or RS–422 comes with the Wiegand option built in.

To use Wiegand, follow these steps.

1. Connect SmartPass to the PC, laptop, or terminal emulator using RS–232 connections as described in the section “Using a RS-232 Interface” on page 4-7 or RS–422 connections as described in the section “Using RS-422 Interface” on page 4-10.
2. If you are using SmartPass Host, select the Communication drop-down menu and click the Wiegand Interface option to configure SmartPass to Wiegand interface.

   If you are using a terminal emulator, use command 451 to configure SmartPass to Wiegand interface.
3. Power down the PC.
4. Disconnect the connection between SmartPass and the PC, laptop, or terminal emulator.
5. Follow the directions in the section to “Connecting Colored Wire Pair Cable” on page 4-11 connect the interface.

Connecting Colored Wire Pair Cable

Table 4-5 shows the Wiegand colored wiring assignments.

Table 4-5 Wiegand Interface Signal Wiring for Colored Wire Pair Cable

Signal from SmartPass	Colored Pair Wire Cable		Connect to Signal from Host
	Wire Pair from SmartPass	Color Used	
Wiegand Zero Output	Blue/Red	Blue	Data0
Wiegand One Output		Red	Data1
Signal Ground	Yellow/Black	Yellow or black	Ground

To connect the interface, perform the following steps.

1. Connect the blue wire (data0) from the blue and red SmartPass wire pair to the data0 wire of your Wiegand device.
2. Connect the red wire (data1) from the blue and red SmartPass wire pair to the data1 wire of your Wiegand device.
3. Connect either the yellow or black wire from the yellow and black wire SmartPass wire pair to your Wiegand device signal ground.

Note: *The RS–232 or RS–422 interface is still included on SmartPass even when you use the Wiegand configuration. Pull the RS–232 red/black wire pairs to a convenient location and tape the ends.* ***Do not cut these wires. If you cut the wires, you may not***

be able to use them in the future for testing, setting frequency, or adding additional functions.

Default Configuration Settings

Before configuring SmartPass for operation at your site, it will be helpful to know the factory default settings.

General Configuration Settings

Each SmartPass and its shipping carton are labeled to indicate the unit's general configuration. Table 4-6 contains explanations of the AI1620 SmartPass configuration fields.

Table 4-6 SmartPass Configuration Label Fields

Field	Description
1st	**Model number** 1620 915 MHz
2nd	**RF Power** LO=low RF power (500 mW) HI=high RF power (2000 mW)
3rd	**Interface** T=RS-232 and Wiegand F=RS-422 and Wiegand
4th	**Tag Type** 10=access control type tags only 20=ISO read-only full-frame and access control
5th	**Antenna Orientation/Tag Polarity** H=horizontal tags

Example: General Configuration Settings

AI1620 LO T 20 H
This SmartPass is configured with low RF power, RS-232 and Wiegand communications, and will read ISO and access control tags mounted horizontally on vehicles.

Operating Parameter Settings

Table 4-7 contains the factory default configuration settings for SmartPass operating parameters. Review the default configurations shown in Table 4-7 to determine which parameters will need to be adjusted in addition to operating frequency[1] and operating

1. Local laws apply. The authorized frequency band in the U.S. is 902 to 904 MHz and 909.75 to 921.75 MHz. Contact Amtech if your application requires a frequency outside of this range.

range. Refer to Chapter 7 for a complete list of parameters and their corresponding commands.

Table 4-7 SmartPass Default Configuration Settings

Parameter	Setting	Command
Operating mode	Data	00
Baud rate	9600	1005
Stop bits	1	1010
Parity	None	1020
End-of-line delay	0 ms	1030[a]
Time and date appended	Enabled	302
Auxiliary information appended	Disabled	310
Unique ID code criteria	Separation of 1 ID	4100
Valid ID code criteria	1 acquisition	4200[a]
Uniqueness timeout	2 minutes	441[a]
Wiegand mode	Disabled	450
Tag translation mode	Disabled	452
Wiegand transmit mode	1 second	4601
Dual processing mode	Reset on A, Transmit on A	4800
Reader ID number	00	6000
Communications protocol	Basic	610
Error correcting protocol (ECP) timeout	12.7 sec	612FE
Flow control	Software (XON/XOFF)	6141
Start-of-message character	# (23 hex)	6150[a]
Buffer control mode	Disabled	6160
Echo mode	Enabled	6171
sense output control	Predefined	621
RF-by-input control	Enabled	641
RF operating frequency	915 MHz	64200
RF operating range	Maximum	6431F
sense output pulse duration	228 ms	67C

Table 4-7 SmartPass Default Configuration Settings (Continued)

Parameter	Setting	Command
Presence without tag reports	Disabled	6900
Minimum presence true period	0 ms	6910[a]
RF-off control	Timeout or no presence	6922
RF timeout	Never true	693F
Input inversion	Disabled	6940
Serial number	NNNNNN	695
Store hardware configuration	Hardware configuration not known	696
Periodic system check tag	Disabled	810
Periodic check tag interval	30 min	8135[a]
Check tag location	Internal	8160[a]
Input status change reports	Disabled	820

a. Fixed parameter, set at factory, not user changeable

Configuring Operating Parameters Using Terminal Emulation Software

To configure SmartPass using a PC and terminal emulation software to manually enter SmartPass host commands, follow the instructions in the section “Connecting SmartPass to the PC” on page 4-7 to connect SmartPass to a PC. Then, enter the appropriate configuration commands through the terminal emulation software on your PC. You may want to read the section “Configuring Operating Parameters Using SmartPass Host” on page 4-14 to guide you as to which parameters you are likely to need to configure.

See Chapter 7 for a detailed description of all available configuration commands.

Configuring Operating Parameters Using SmartPass Host

This section describes how to use SmartPass Host to configure SmartPass. SmartPass Host provides an easy-to-use menu to download flash software, configure reader operating parameters, perform diagnostics, and retrieve tag data rather than manually typing in host commands with a terminal emulation software.

Loading and Starting SmartPass Host

If SmartPass's power is not already on, turn on the power.

1. Insert the SmartPass Host software diskette into the PC disk drive.
2. OPTIONAL: Open, print, and read the READ.ME file on the diskette.
3. Start SmartPass Host by performing one of the following. This displays the SmartPass Host status window, shown in Figure 4-3.

   At the DOS prompt, change the working directory to `A:\1620`, type `dl`, and press the ENTER key to start SmartPass Host.

   OR

   In Windows, double-click the DL.exe file in the 1620 folder on the A drive.

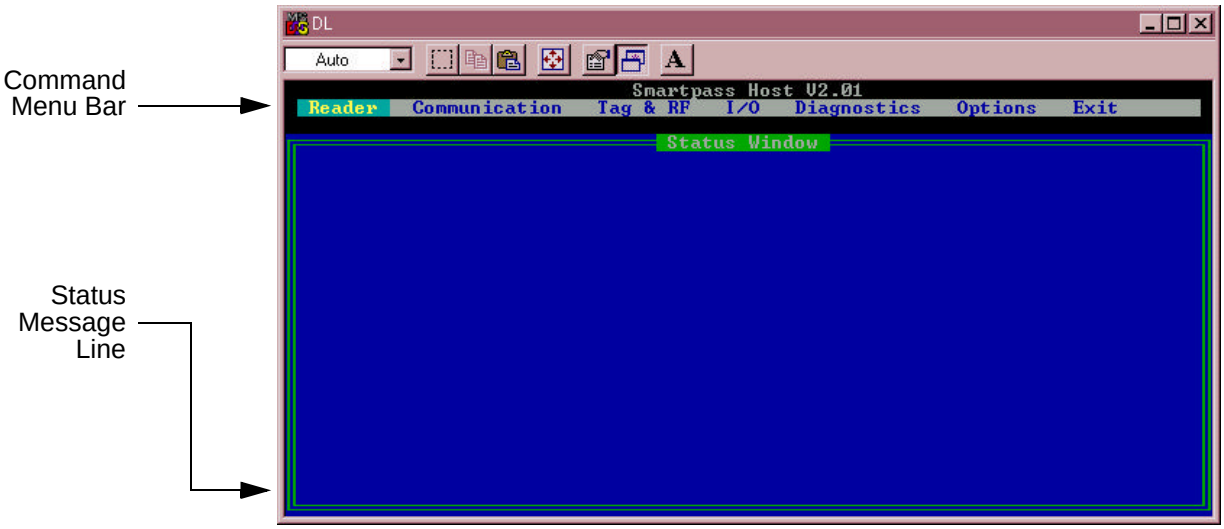

Figure 4-3 Status Window

Verifying PC-to-SmartPass Communications

Note: *When testing SmartPass using a laptop, Amtech recommends that you configure laptop communications parameters to match those of the host computer to which SmartPass will be connected after testing and configuration are completed.*

1. Select the **Communication** drop-down menu and click the **Find Reader** option. This displays the **Select Option** dialog box shown in Figure 4-4.

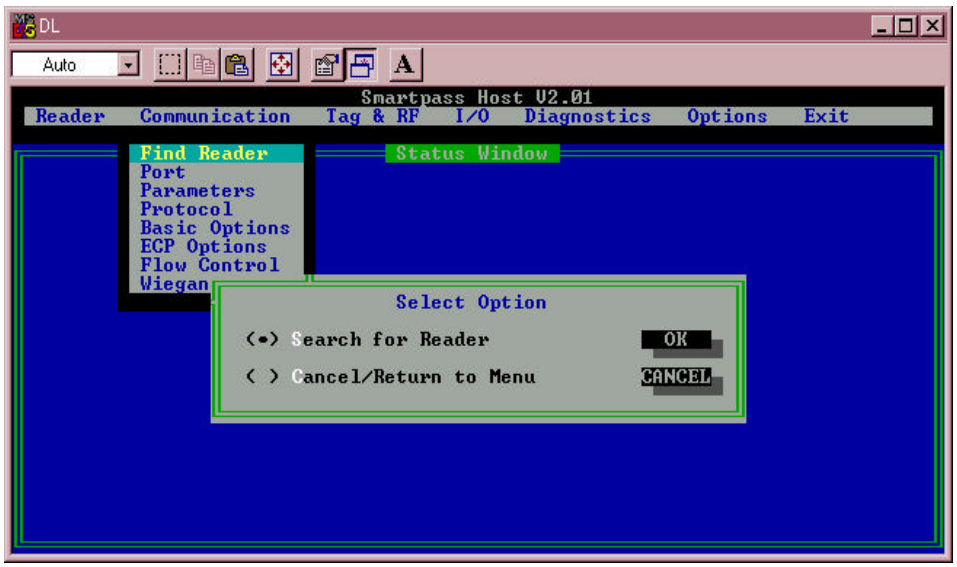

Figure 4-4 Find Reader Options

2. Select the **Search for Reader** option and click the **OK**. SmartPass Host begins searching for the reader.

If the PC successfully locates SmartPass, SmartPass Host displays the message shown in Figure 4-5. If this message appears, the PC to SmartPass communications are verified.

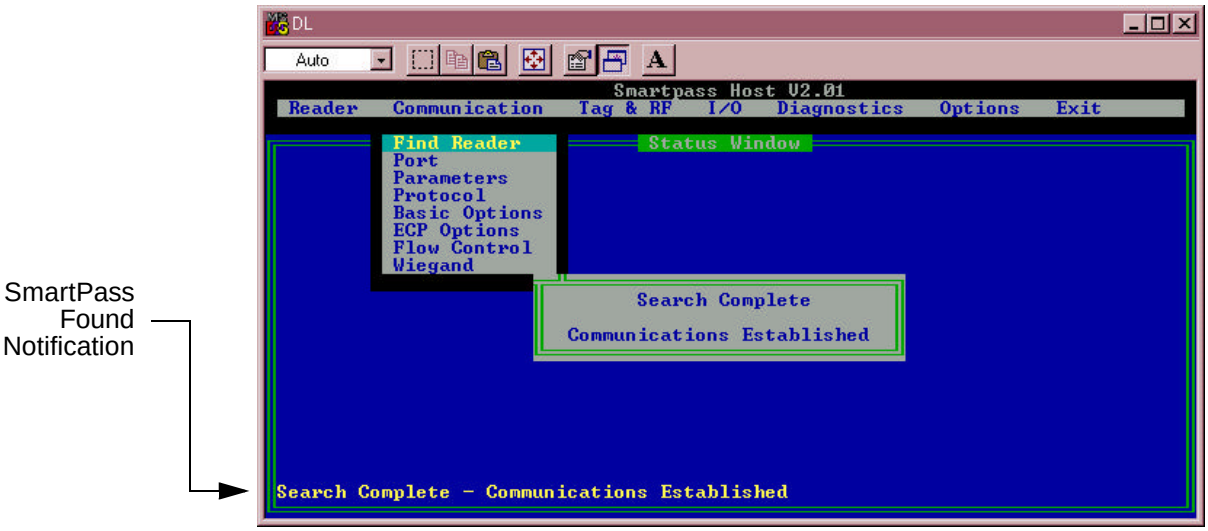

Figure 4-5 Communications Established Message

If the PC is unable to locate SmartPass, SmartPass Host displays the error message shown in Figure 4-6.

SmartPass Not Found Notification

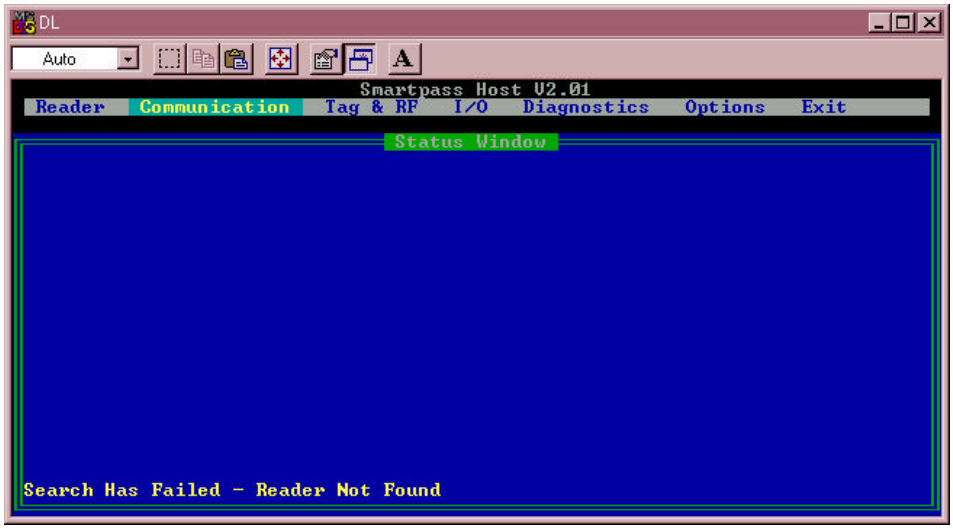

Figure 4-6 Reader Not Found Message

If this message appears; then perform the following procedures.

- Ensure that all the following communications factors are correct. Change any factors that require it.
- Verify that SmartPass has power.
- Verify the connections between the PC and SmartPass.
- Verify the receive (Rx) and transmit (Tx) connections.
- Verify the RTS and CTS connections if using handshaking.
- Verify the COM port settings using the instructions in the section “Serial Port Communications” on page 4-33.

Repeat Steps 1 and 2 above to go through the **Communication** menu items again.

If you still cannot verify the SmartPass and PC communications, use the information in the section “Technical Support” on page 9-7 to contact Amtech.

Verifying Tag Read Capability

After establishing communications between SmartPass and the PC, test the capability to read tags by performing the following steps.

1. Pass one test tag in front of the unit. If SmartPass reads the tag, SmartPass Host displays the tag information at the bottom of the status window, as shown in Figure 4-7.

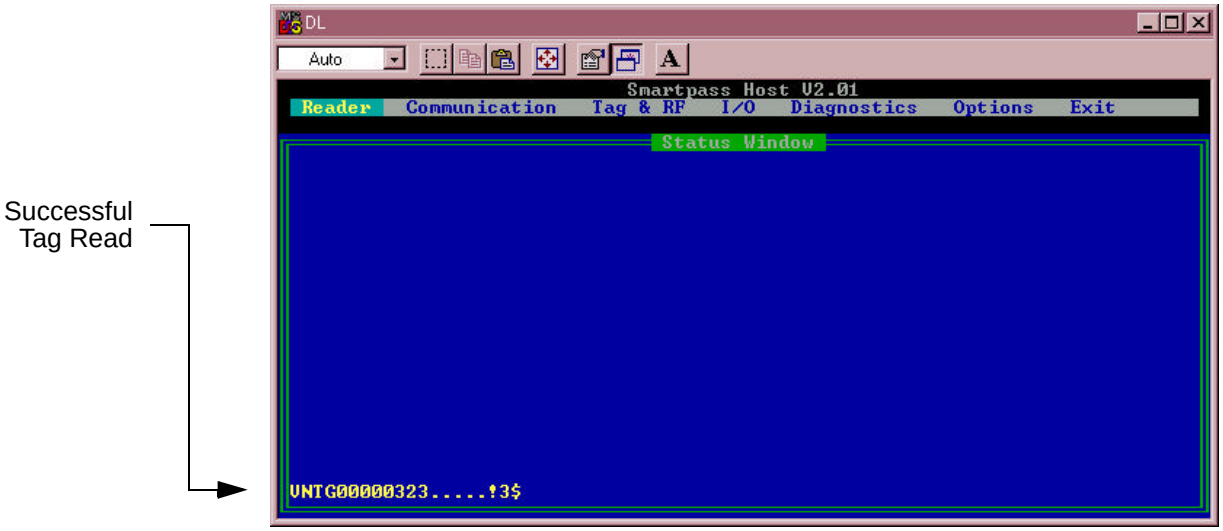

Figure 4-7 Successful Tag Read

If the read is unsuccessful, try the following actions:

- Be sure the red/green pair are still twisted together as described in the section “Testing Using an Audible Circuit Tester” on page 4-2.
- Ensure the tag you are using is compatible with the particular option of SmartPass you are working with. Some SmartPasses cannot read full-frame tags.

To determine if the SmartPass you are working with can read full-frame tags, refer to the section “General Configuration Settings” on page 4-12 for information on reading the configuration label. A SmartPass could have a label such as the following:

AI1620 HI T **10** H

where the **10** indicates it can read only access control tags, not full-frame tags.

- Using the audible circuit tester, verify that the reader is capable of reading the tag in the read zone. If it is, the problem is probably in the communications between SmartPass and the host.

2. Pass a different test tag in front of your SmartPass.

Note: *An internal timer in SmartPass causes SmartPass to ignore a specific tag for 2 minutes after a good read unless a different tag is read in the meantime.*

3. When SmartPass reads the second tag successfully, SmartPass Host displays that tag's information in the status window below the information for the first tag, as shown in Figure 4-8.

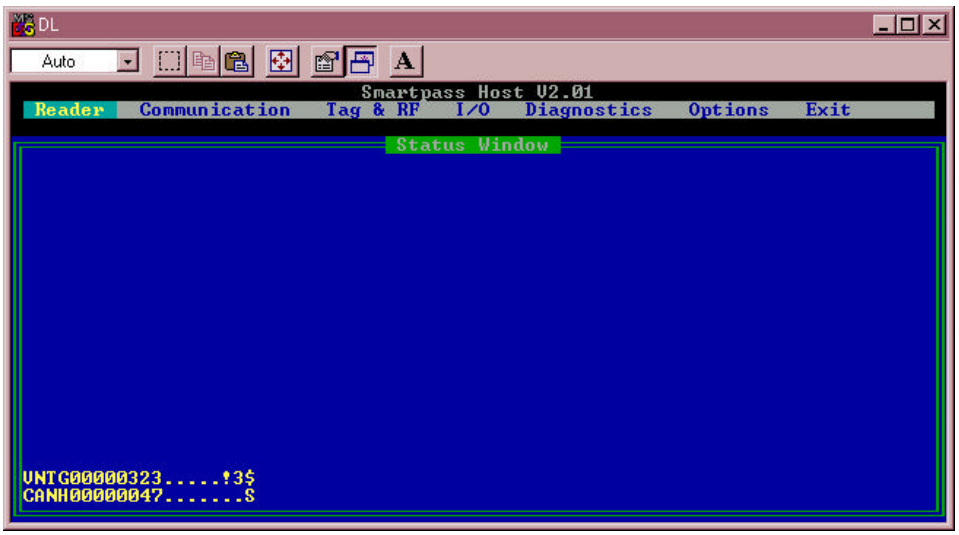

Figure 4-8 Second Successful Tag Read

If the read is unsuccessful, try the following actions:

- Be sure the red/green pair are still twisted together as described in the section "Testing Using an Audible Circuit Tester" on page 4-4.

- Ensure the tag you are using is compatible with the particular option of SmartPass you are working with. Some SmartPasses cannot read full-frame tags.

To determine if the SmartPass you are working with can read full-frame tags, refer to the section "General Configuration Settings" on page 4-12 for information on reading the configuration label. A SmartPass could have a label such as the following:

AI1620 HI T **10** H

where the HI indicates high RF power and the **10** indicates it can read only access control tags.

- Using the audible circuit tester, verify that the reader is capable of reading the tag in the read zone. If it is, the problem is probably in the communications between SmartPass and the host.

Configuring SmartPass Parameters

Follow the procedures in this section to configure SmartPass parameters using SmartPass Host v2.01. Procedures are listed in alphabetical order by parameter. The PC must be connected to and communicating with SmartPass, and SmartPass Host must be started, as described in the section "Verifying PC-to-SmartPass Communications" on page 4-15.

Note: *If you are using Wiegand mode, you must connect the PC or laptop to SmartPass using the RS-232 or RS-422 interface before attempting to send commands to the reader. You can leave the Wiegand interface connected during this procedure.*

Appended Tag Data

Use this procedure to set appended tag data parameters using SmartPass Host. See the section "30N Append Time and Date Selection" on page 7-10 and the section "31N Append Auxiliary Information Selection" on page 7-10 for more information.

1. Select the **Tag & RF** drop-down menu and click on **Appended Data**. Figure 4-9 illustrates the options for appending information to tag data.

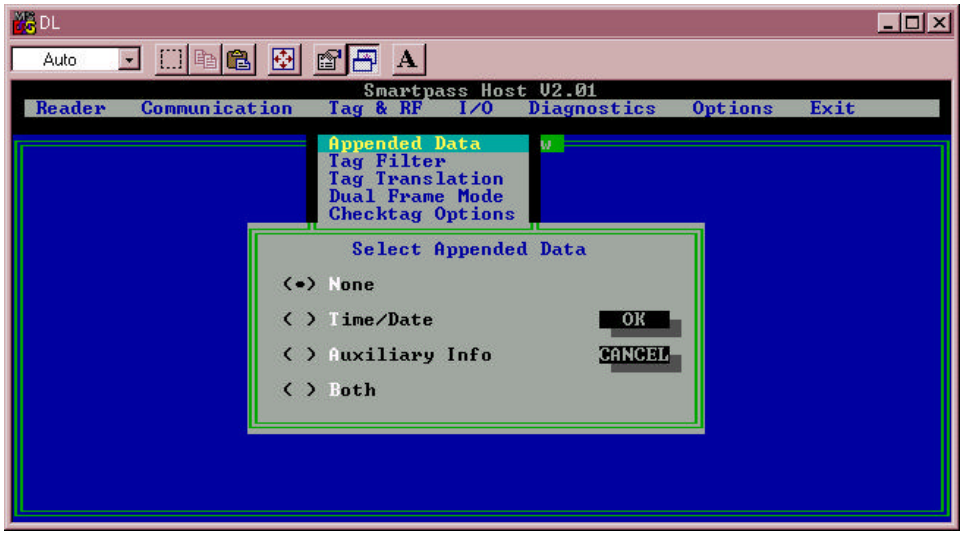

Figure 4-9 Select Appended Data Dialog Box

2. Click the option you want to select; then click **OK** to make the change.

Check Tag

SmartPass supports both host-invoked and periodic check tag operations. If a real tag is in the field when a check tag operation begins, the check tag operation will be aborted. The check tag operation involves use of internal check tag circuitry (internal check tag option).

The circuit of an Amtech check tag is built into each reader to allow a host computer to remotely diagnose SmartPass. The host sends SmartPass command 8110 to activate the check tag. SmartPass transmits the RF signal, which is reflected back into the

receive circuits by the check tag, just as if a normal tag had been placed into the read zone. The check tag contains the data SYSTEM CHECK TAG that SmartPass will receive, decode, and send to the host system.

Use the following procedure to set check tag options using SmartPass Host.

See the section “810 Disable Periodic Check Tag (Factory Default)” on page 7-41 for more information.

1. Select the **Tag & RF** drop-down menu and click **Checktag Options**. Figure 4-10 illustrates the submenu for check tag operations.

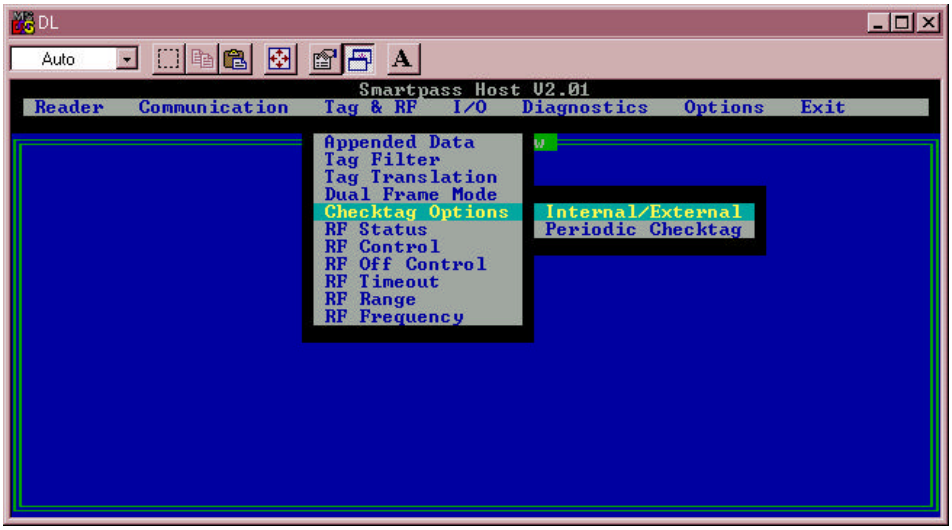

Figure 4-10 Check Tag Options Submenu

Note: *Only the internal check tag is available on the AI1620 SmartPass. Selecting the external check tag option will return an error message.*

2. To disable or enable periodic check tag, click **Periodic Checktag** option to display the **Select Periodic Checktag Option** dialog box, as shown in Figure 4-11.

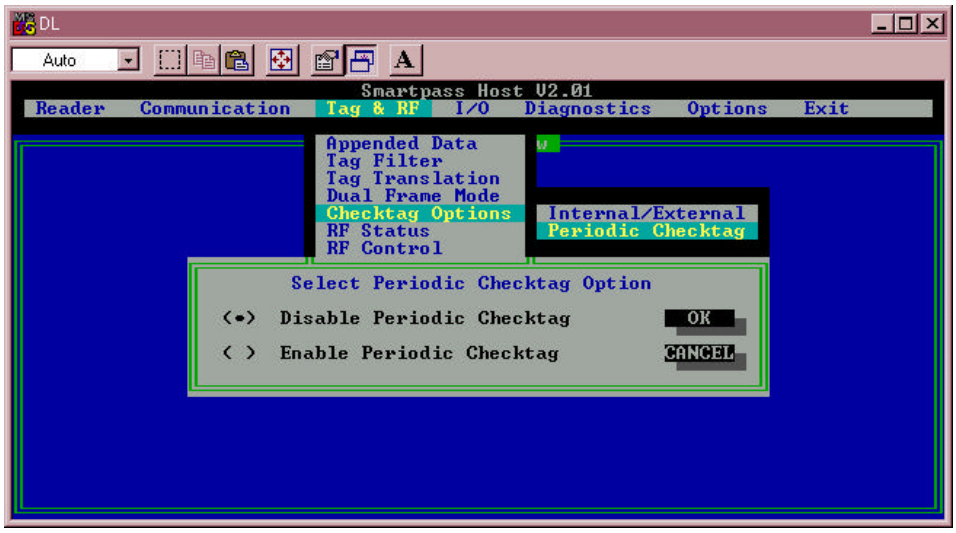

Figure 4-11 Select Periodic Checktag Option Dialog Box

3. Click the option you want to select; then click **OK** to make the change.

ID Separation

The host can select a unique ID separation of one ID (command 4100) or two IDs (command 4101). The uniqueness timeout is fixed at 2 minutes. The reader default operation is for a unique ID separation of one ID and a uniqueness timeout of 2 minutes. The host computer can disable the uniqueness check using command 40 (transmit all IDs) or command 43 (buffer all IDs). In this case, every tag ID received will be transmitted without regard to uniqueness. The host can reinstate uniqueness checking with commands 4100 or 4101 (select ID separation).

Use the following procedure to set ID separation using SmartPass Host. See the section “40 Transmit All ID Codes” on page 7-11 through the section “43 Buffer All ID Codes” on page 7-12.

1. Select the **Tag & RF** drop-down menu and click on **Tag Filter**. Figure 4-12 illustrates the options for appending information to tag data.

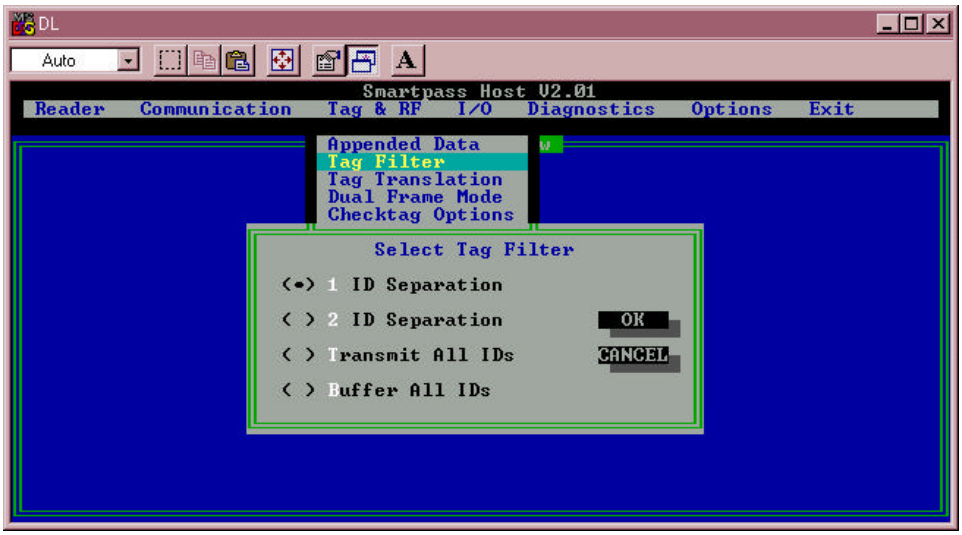

Figure 4-12 Select Tag Filter Dialog Box

2. Click the option you want to select; then click **OK** to make the change.

Sense Output Devices

Both the RS–232 and RS–422 configurations used by SmartPass have two sense output circuits — sense output0 and sense output1.

By default, SmartPass operates in predefined output mode where sense output0 and sense output1 are asserted every time a unique valid tag is read. Both sense output devices are asserted by issuing command 621 (select the predefined sense output mode). They are not asserted when tags are acquired in the transmit all or buffer all ID mode, or when SmartPass is operating in Wiegand mode. The sense output pulse duration is variable (command 67N).

The host computer can disable the predefined sense output control by issuing command 6201 to turn sense output0 on or by issuing any of the following commands: 6200, 6201, 6202, or 6203. While under host control, the sense outputs are not automatically asserted when a valid tag is read. The host must issue command 621 to return to the predefined mode.

Reports

SmartPass can be configured to transmit presence without tag reports and input status change reports. Both report messages are handled the same as incoming tag IDs and are buffered behind previously acquired tag IDs.

A presence without tag report is transmitted in data mode only, **and only if the system has a presence detector**. This report is sent if a presence is detected without the detection of a valid tag ID.

If configured with command `82N Select Input Status Change Report Option` to transmit input status change reports, the reader will transmit a message to the host any time the inputs change state. Input status change reports are transmitted in data mode only. Input status change reporting is disabled by default.

Use the following procedure to set presence reporting using SmartPass Host. See the section "82N Select Input Status Change Report Option" on page 7-42. Also refer to Chapter 6 for information on message formats.

1. Select the **I/O** drop-down menu and click the **Presence Reports** option. Figure 4-13 illustrates the options for disabling or enabling presence without tag reports.

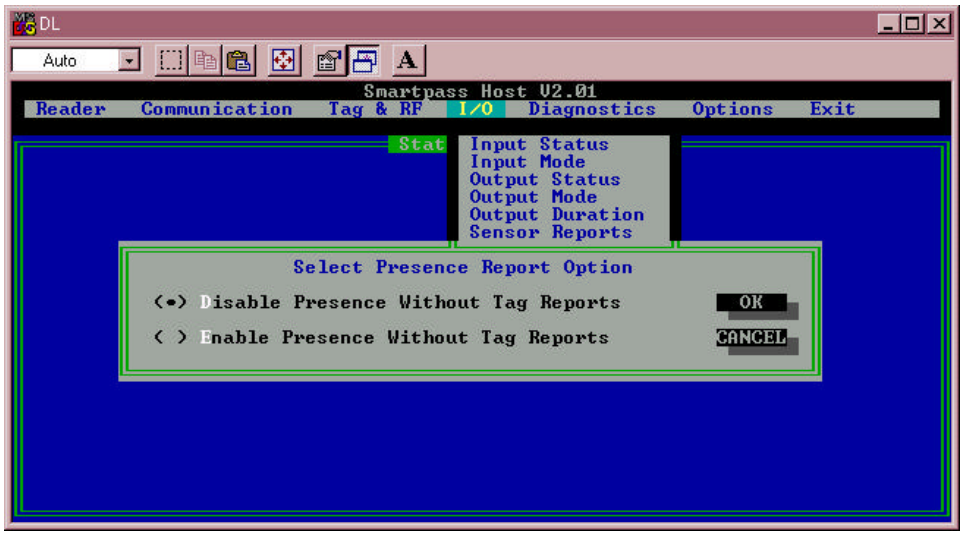

Figure 4-13 Select Presence Report Option Dialog Box

2. Click the option you want to select; then click **OK** to make the change.

3. Select the **I/O** drop-down menu and click the **Sensor Reports** option. Figure 4-14 illustrates the options for sensor reports.

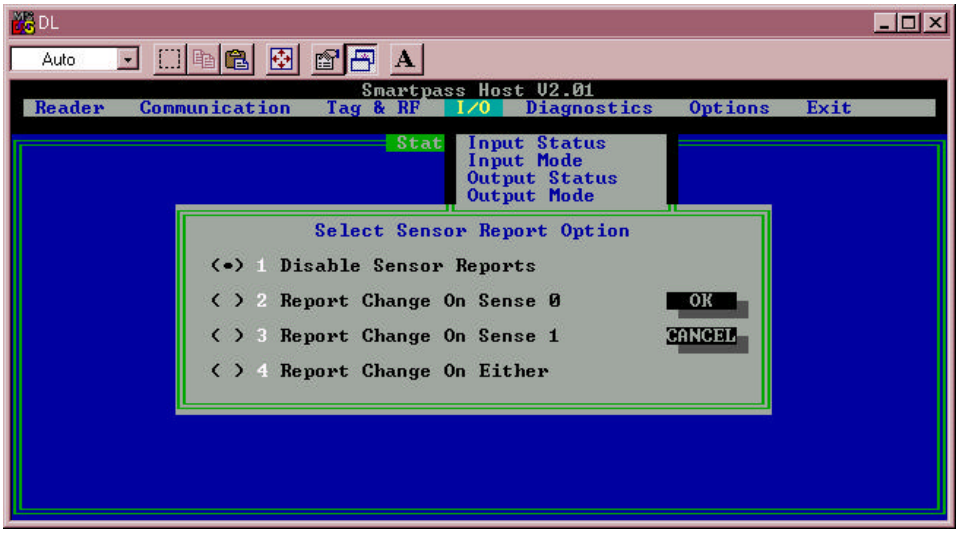

Figure 4-14 Select Sensor Report Option Dialog Box

4. Click the option you want to select; then click **OK** to make the change.

Reset

Reset reader (command 63) clears the tag and message buffer (not in ECP mode). In addition, it resets uniqueness, clears the power fail bit, and transmits the sign-on message. The reader returns to data mode following the completion of this command.

Note: *This command does **not** reset any of the configuration parameters.*

Use the following procedure to reset SmartPass using SmartPass Host. See the section “63 Reset Reader” on page 7-30.

1. Select the **Reader** drop-down menu and click the **Reset** option, as shown in Figure 4-15.

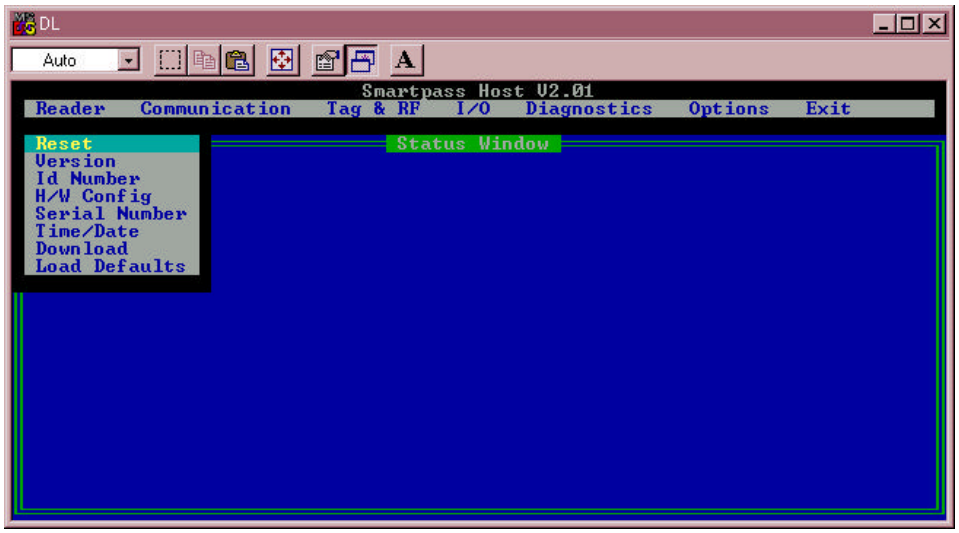

Figure 4-15 Reader Reset option

SmartPass Host displays the sign-on message at the bottom of the screen, as shown in Figure 4-16.

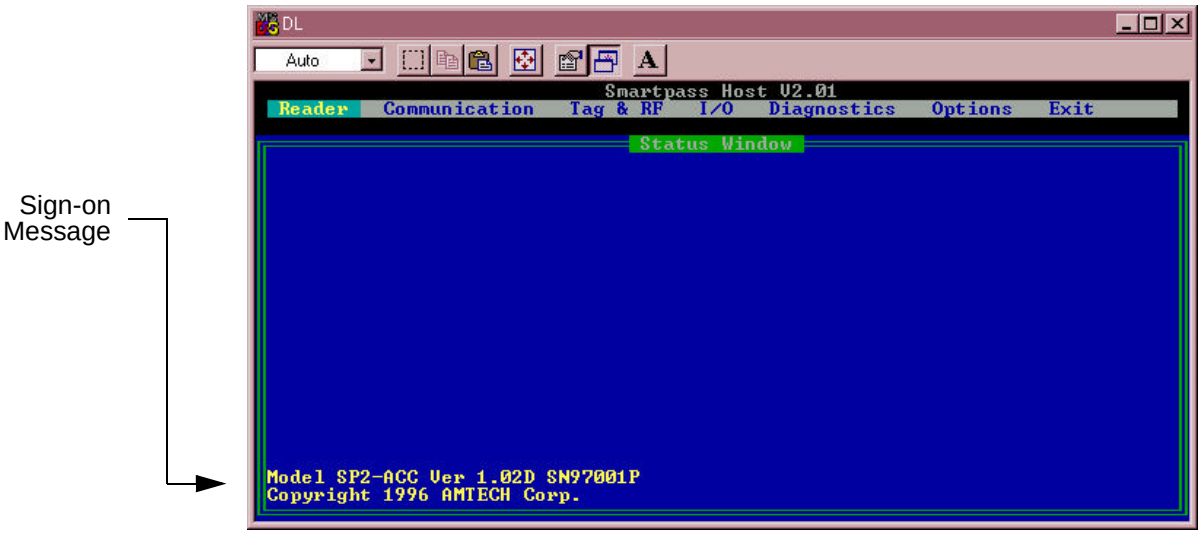

Figure 4-16 Sign-On Message

Radio Frequency

Caution

The RF for each SmartPass at the site must be set according to the frequency specified in the FCC site license.

You can do this using SmartPass Host or using a terminal emulation program and issuing the frequency command, as discussed in the section “642NN Select RF Operating Frequency” on page 7-31.

Caution

Only trained, authorized installation and maintenance personnel are permitted by FCC to set the RF.

SmartPass Host allows you to set the frequency range from 902 to 928 MHz in 0.5 MHz steps.

Caution

The authorized frequency band in the U.S. is 902 to 904 MHz and 909.75 to 921.75 MHz. Contact Amtech if your application requires a frequency outside of this range.

Use the following procedure to set the frequency range.

1. To display the current RF setting, select the **Tag & RF** drop-down menu and click the **RF Frequency** option. The example in Figure 4-17 indicates a SmartPass frequency of 902.5 MHz.

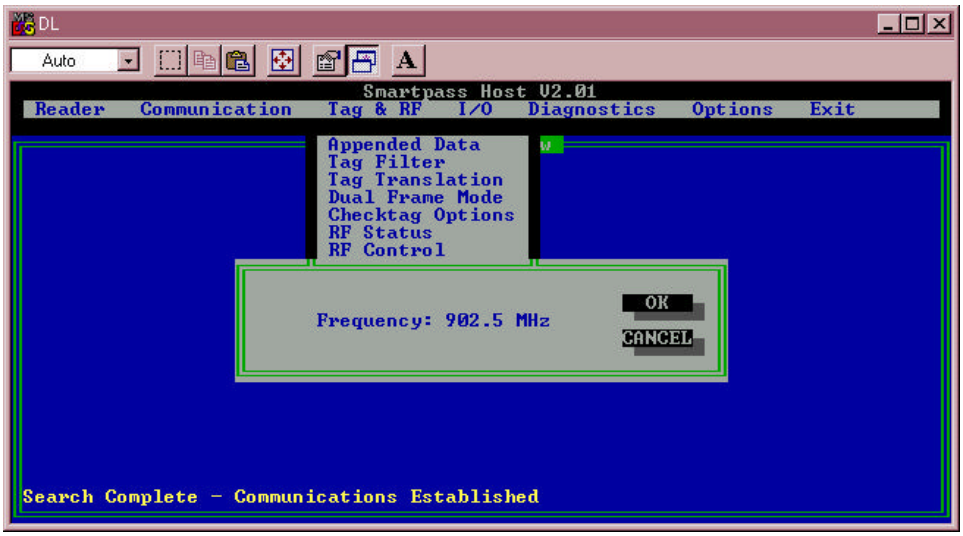

Figure 4-17 Current RF Display Box

2. To change the RF setting, select the **Options** drop-down menu and click on **Send Command**. This displays the **Enter Command Code** dialog box shown in Figure 4-18.

3. Type in command `642NN` — where **NN** is a hexadecimal value from 00 to 34 — and press ENTER. See Table 7-1 on page 7-32 for a complete listing of the hexadecimal values and the corresponding frequencies.

   This sets the frequency from 902 to 928 MHz in 0.5 MHz steps. In the example shown in Figure 4-18, the command `64218` sets the frequency to 914 MHz.

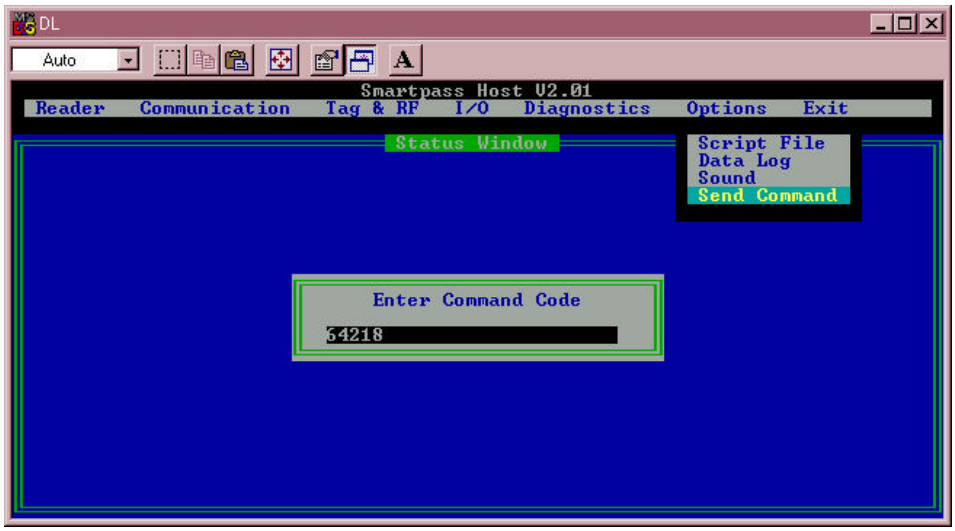

Figure 4-18 Set RF option

The **Select Transmission Option** dialog box shown in Figure 4-19 will display.

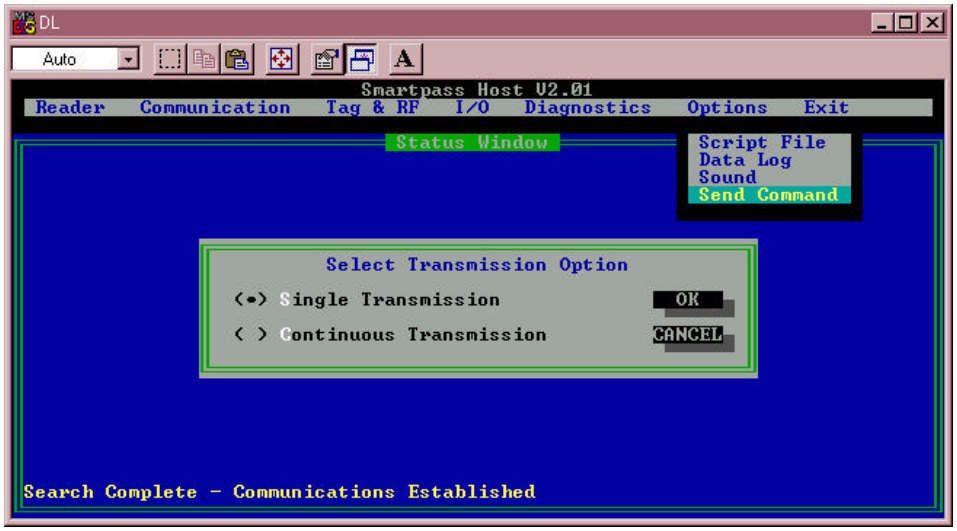

Figure 4-19 Select Transmission Option Dialog Box

4. Click the **Single Transmission** option; then click **OK** to send the command to SmartPass.

Note: *This is referring to transmission of data from the SmartPass to the host, not to transmitting RF energy.*

5. To verify that the RF has been changed to the proper setting, select the **Tag & RF** drop-down menu and click the **RF Frequency** option to see the current frequency setting.

RF Transmission

The RF transmission can be controlled by any of the following methods:

- A vehicle detector using one of the two sense input circuits
- Software commands sent to SmartPass by the host
- The sense input0 wire pair twisted together, as in the test configuration

As a factory default, SmartPass is configured to control the RF power with a vehicle detector. The vehicle detector can be a loop detector, an infrared sensor, or an ultrasonic detector that is connected to sense input0 to turn on the SmartPass RF transmitter.

Figure 4-20 illustrates the three methods of controlling RF sense output.

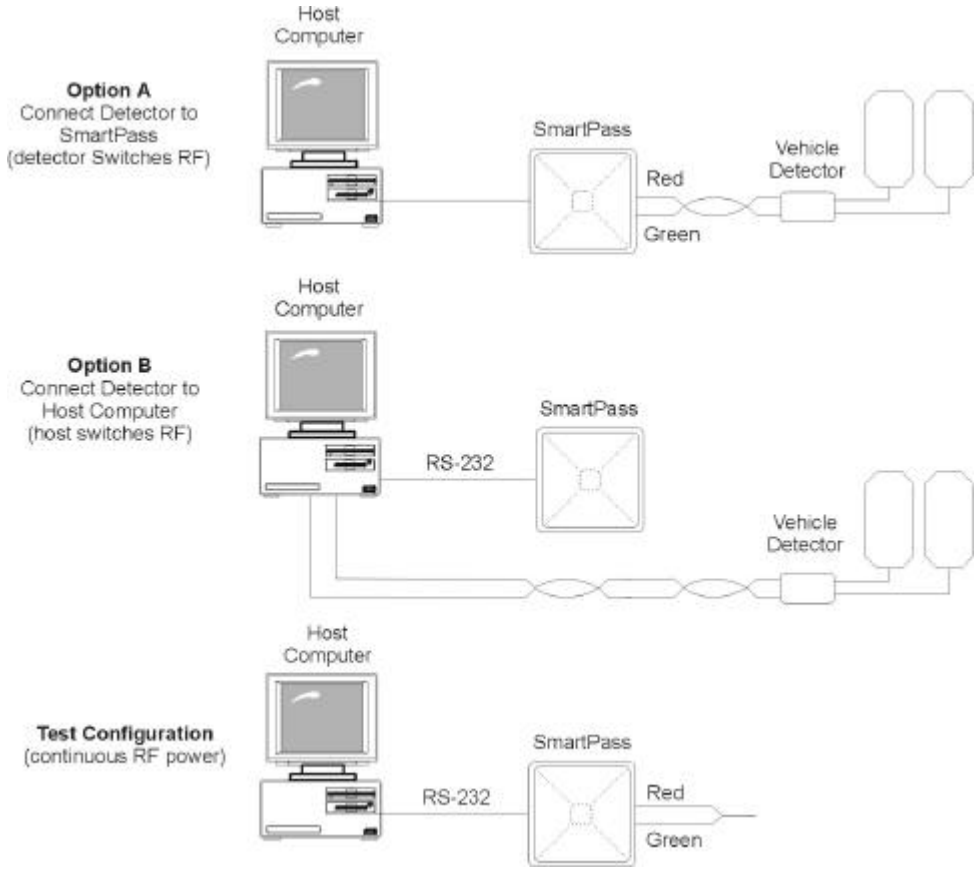

Figure 4-20 SmartPass RF Control Options

Vehicle Detector Controlling RF Transmission

Figure 4-20, Option A, shows a vehicle detector controlling the RF transmitter. This operation is preferred because then the RF transmits only when a vehicle is in the SmartPass read zone.

Use the following procedure to set the option of the vehicle detector controlling SmartPass.

1. Select the **RF Control** option from the **Tag & RF** pull-down menu. This displays the **Select RF Control** dialog box shown in Figure 4-21.

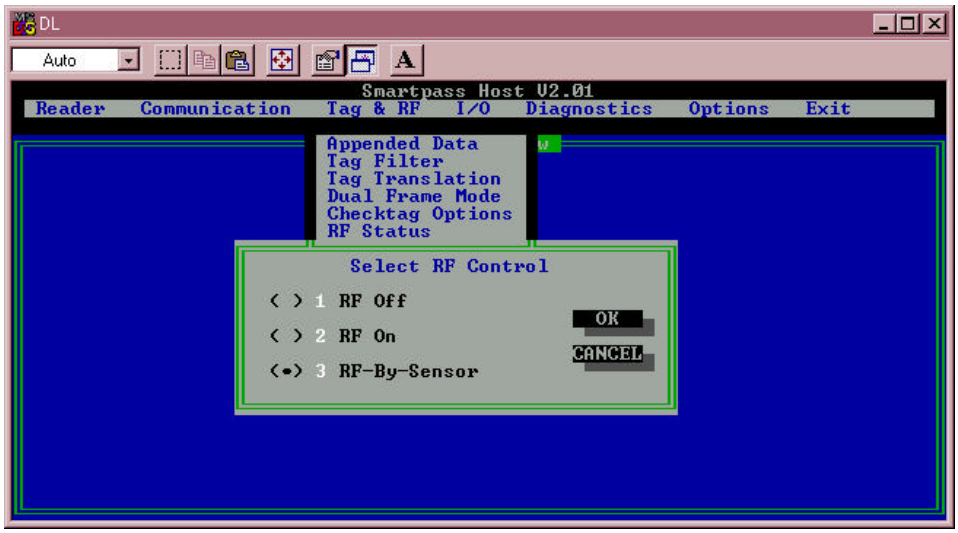

Figure 4-21 Set Sensor Control of RF

2. Click on **3 RF-By-Sensor**; then click **OK**.

Host Controlling RF Transmission

Figure 4-20, Option B, shows the host controlling the RF transmitter.

Note: *For information and instructions on executing software commands, refer to Chapter 8, "Commands."*

If the vehicle detector is connected to the host computer, as shown in Figure 4-20, Option B, commands 6400 (RF transmitter off) and 6401(RF transmitter on) from the host control the SmartPass RF transmitter. Leave the setting on RF-By-Sensor.

Continuous RF Transmission

To test SmartPass, as described in the section "Testing Using an Audible Circuit Tester" on page 4-4, you can turn on the SmartPass RF transmitter continuously by twisting the red and green sense input0 wire pair together. SmartPass must be in command mode 6401, which enables the RF-by-input control (factory default).

Sense Inputs

Both the RS–232 and RS–422 configurations used by SmartPass have two sense inputs — sense input0 and sense input1. The default configuration uses sense input0 as the presence detection device line. RF power is automatically turned on only when the presence detection device (loop detector or other device) detects a presence. Sense input1 is not used directly by the reader; it is used by the host. SmartPass sense inputs are designed to connect to a dry contact closure.

You can configure SmartPass to generate input status change reports, which are transmitted like tag IDs. The host can then respond based on the true/false (closed/open) status of the sense inputs. See the section “Reports” on page 4-23.

The following example shows how to set sense inputs using SmartPass Host. See the section “526 Display I/O Status” on page 7-18, the section “694N Select Input Inversion Option” on page 7-40, and the section “82N Select Input Status Change Report Option” on page 7-42.

1. Select the **I/O** drop-down menu and click the **Input Status** option to display the current status, as shown in Figure 4-22.

Note: *This dialog box is for display only; you cannot make any changes to sense input using this dialog box.*

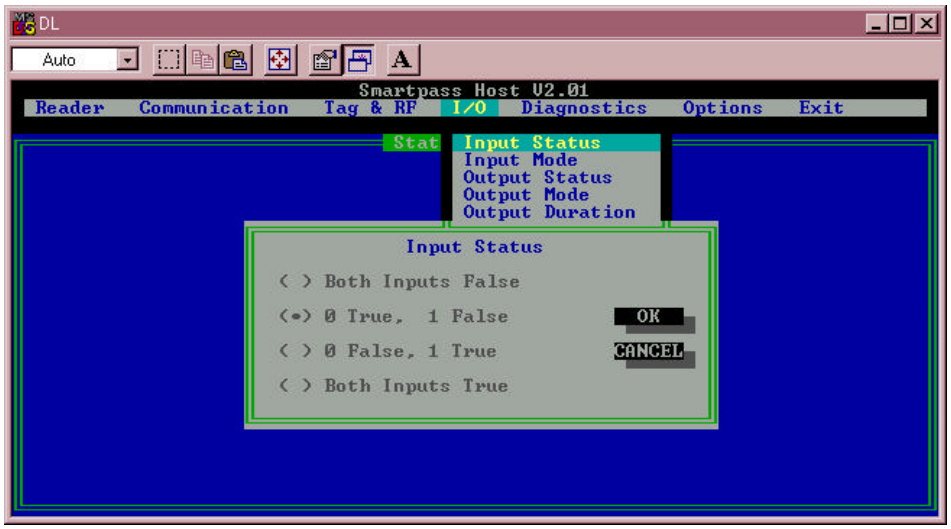

Figure 4-22 Sense Input Status Dialog Box

2. Click **OK** to clear the screen; then select the **I/O** drop-down menu again and click the **Input Mode** option. This will display the **Select Input Mode** dialog box, as shown in Figure 4-23.

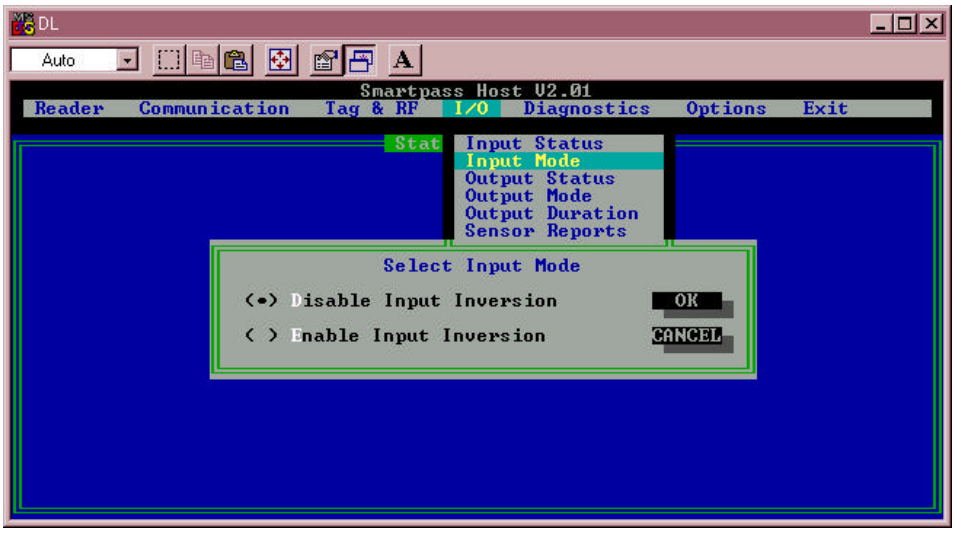

Figure 4-23 Select Input Mode Dialog Box

3. Click on **Enable Input Inversion** to switch the sense input status; then click **OK**.

Serial Port Communications

SmartPass supports one communications port, which can be ordered as either RS–232/Wiegand or RS–422/Wiegand. For the RS–232 and RS–422 communications specifications, SmartPass maintains the following three sets of parameters that affect serial port communications:

- Port configuration parameters (baud rate, data bits, stop bits, parity)
- Communication protocols (basic, data inquiry, error correcting)
- Flow control scheme (none, software, hardware)

The default serial port configuration for each of these three parameters is as follows:

- 9600 baud, 8 data bits, 1 stop bit, no parity
- Basic communications protocol
- Software flow control (XON/XOFF)

You can change these parameters in data mode and command mode operation by issuing commands with the host or through SmartPass Host. Use the following procedures to set serial port communications parameters using SmartPass Host.

Port Configuration Parameters

Use this procedure to set port configuration parameters using SmartPass Host. See the section “100N Select Baud Rate” on page 7-7 through the section “102N Select Parity” on page 7-8.

1. Select the **Communications** drop-down menu and click the **Parameters** option. Figure 4-24 illustrates the options for port configuration parameters.

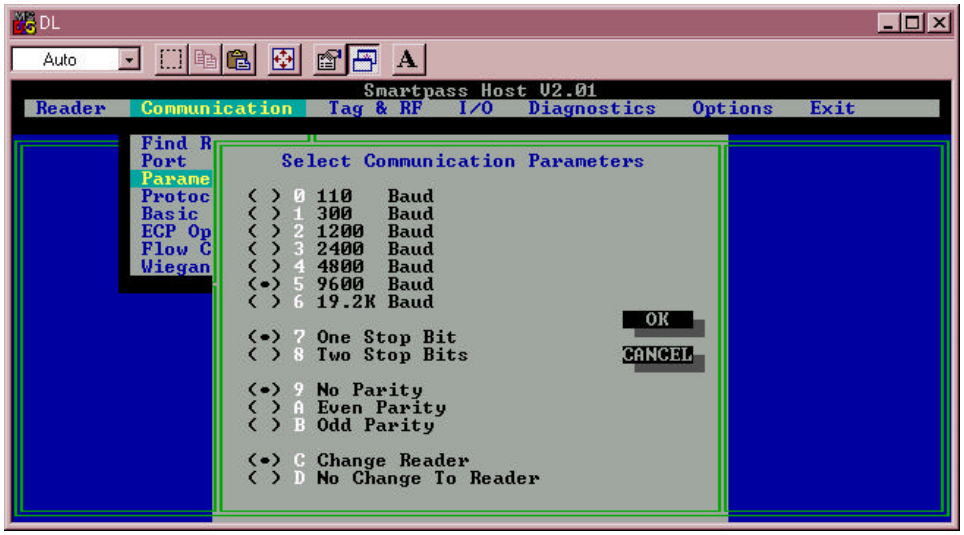

Figure 4-24 Port Configuration Parameters Dialog Box

2. Click the option you want; then click **OK** to make the change.

Communications Protocol

Use the following procedures to set communications protocol. Chapter 6 contains detailed reference information relevant to developing host software. Also, see the section “610 Select Basic Protocol (Factory Default)” on page 7-26 through the section “613 Select Data Inquiry Protocol” on page 7-27 for more information.

1. Select the **Communications** drop-down menu and click the **Protocol** option. Figure 4-25 illustrates the two options available.

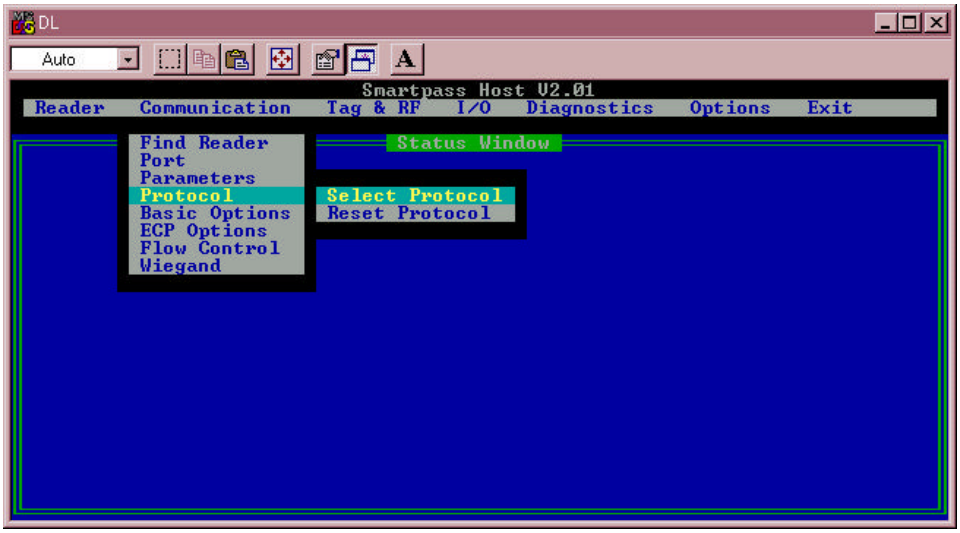

Figure 4-25 Protocol Parameters Submenu

2. The **Select Protocol** option displays the **Select Communications Protocol** dialog box shown in Figure 4-26.

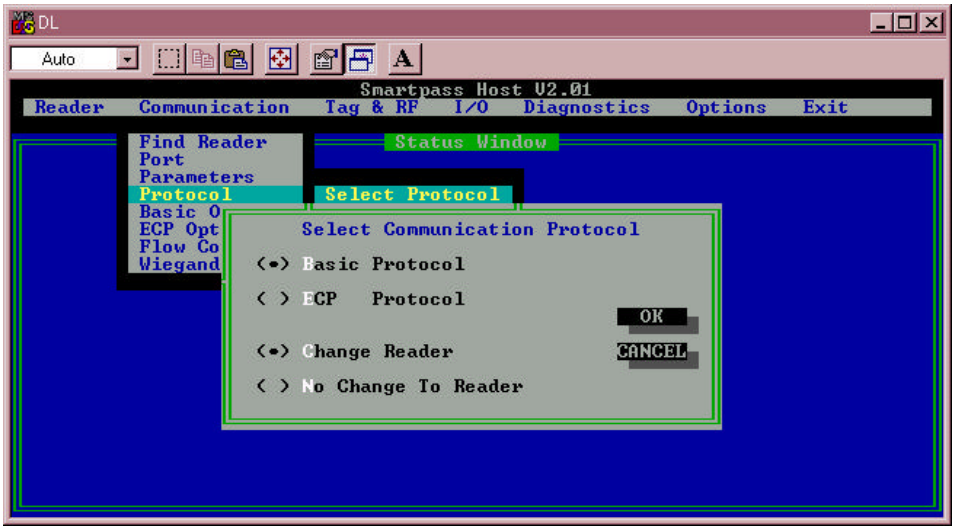

Figure 4-26 Select Communications Protocol Dialog Box

3. Click the option you want; then click **OK** to make the change.

Software Flow Control

Two modes of flow control are supported — software (XON/XOFF) and hardware (CTS - clear to send). The host can enable or disable flow control with command 614N.

The host can use software control characters (XON/XOFF) or the hardware CTS handshake line to interrupt reader transmissions. When the reader is configured for software flow control, it stops transmitting if it receives the XOFF character from the host (command 13H). It resumes transmitting only when it receives the XON character (command 11H) from the host. Likewise, when the reader is configured for hardware flow control, it stops transmitting if it detects that the CTS line is no longer asserted. It resumes transmitting when this line is asserted. If flow control is not needed, the reader should be configured for no flow control (command 6140).

Note: *Amtech recommends that XON/XOFF flow control be disabled while using the error correcting protocol.*

Use the following procedure to set software flow control parameters using SmartPass Host. See the section "614N Select Flow Control Option" on page 7-27.

1. Select the **Communications** drop-down menu and click the **Flow Control** command. Figure 4-27 illustrates the two options for flow control.

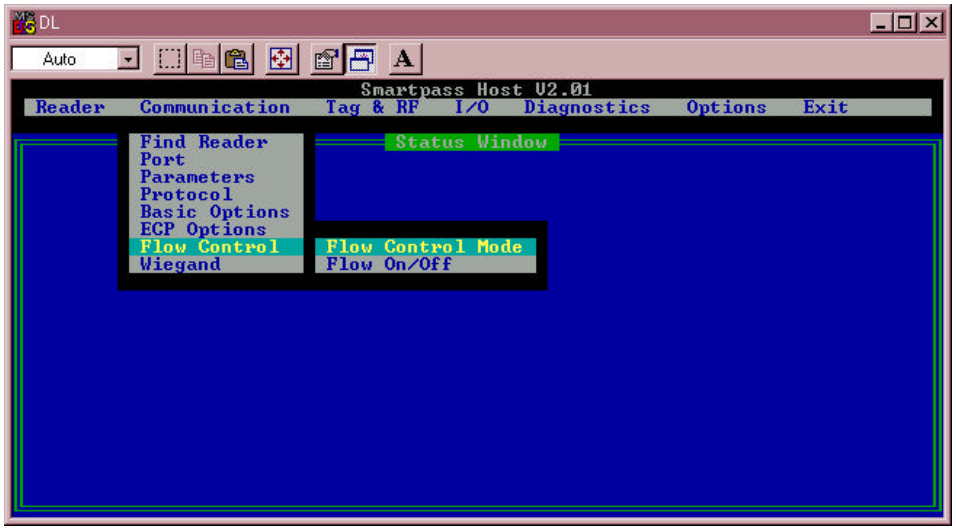

Figure 4-27 Port Configuration Parameters Submenu

If you select the **Flow Control Modes** option, the **Select Flow Control** dialog box, as shown in Figure 4-28, displays.

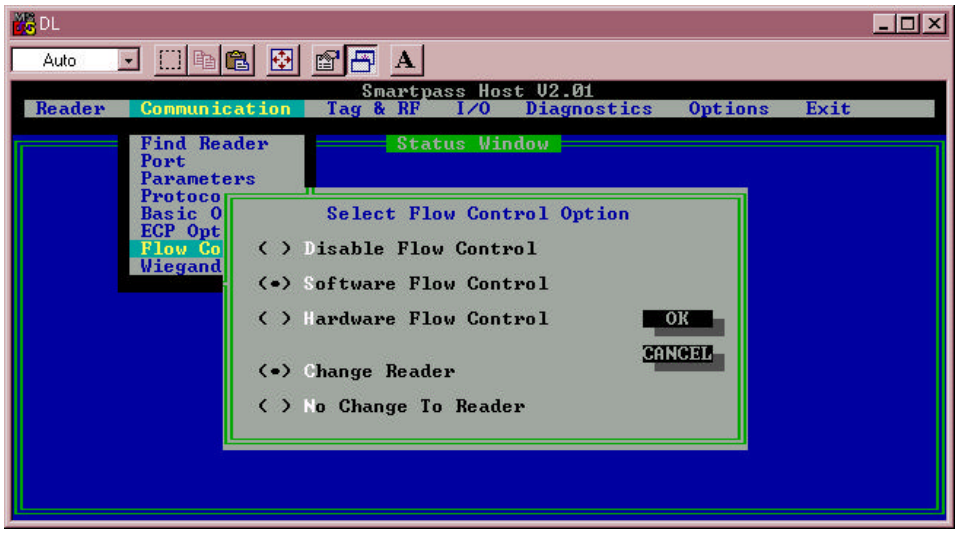

Figure 4-28 Select Flow Control Option Dialog Box

If you select the **Flow On/Off** option, the **Select Option** dialog box as shown in Figure 4-29 is displayed.

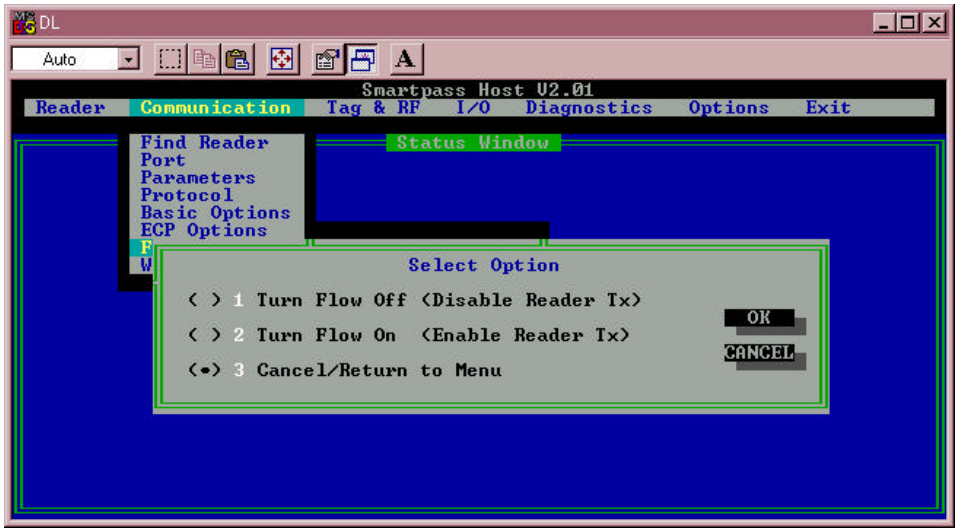

Figure 4-29 Select Option Dialog Box

2. Click the option you want; then click **OK** to make the change.

Tag Translation

Tag translation mode directs SmartPass whether or not to translate data received from half- or dual-frame tags. If tag translation mode is enabled, AAR or ATA tag format will be translated. If a non-ATA tag is read while in translate mode, no data will be displayed.

Use the following procedure to set tag translation options using SmartPass Host. See the section "452 Disable Tag Translation Mode (Factory Default)" on page 7-13 and the section "453 Enable Tag Translation Mode" on page 7-13.

1. Select the **Tag & RF** drop-down menu and click the **Tag Translation** option. Figure 4-30 illustrates the options for translating tag data.

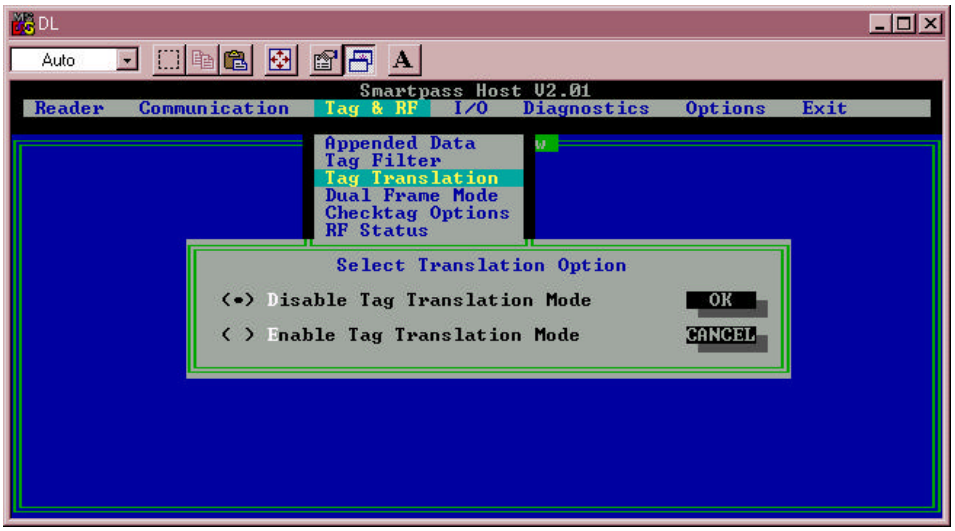

Figure 4-30 Select Translation Option Dialog Box

2. Click the option you want to select; then click **OK** to make the change.

5

General Software Information

This chapter provides software-related information for the AI1620 SmartPass system. The information covers version SP2-ACC V2.01 of the SmartPass software. This version will only execute on AI1620 SmartPass models.

Note: *Amtech strongly recommends that you read the READ.ME file on the SmartPass software diskette before you install or use SmartPass.*

This chapter contains various software-related topics arranged in alphabetical order by subject. In addition to this chapter, see Chapter 6 and Chapter 7.

Command Entry Conventions

All SmartPass commands are preceded by the start-of-message character (#). The end-of-message sequence expected from the host is a carriage return (CR). SmartPass terminates messages with a return and a line-feed (CR/LF). For example, the switch to command mode 01 is typed as follows:

#01<enter>

where:

<enter> Enter or Return key

Some command characters may be represented by the letter N. This letter indicates you are to supply a value. Maximum valid entries are the numbers 0–9 and the uppercase letters A–F. These letters allow for as many as 16 available user responses and is based on the hexadecimal numbering system.

Commands have at least two characters following the # character. Table 5-1shows the basic structure of a four-character command.

Table 5-1 Four-Character Command Structure

#1005 (Set Baud Rate to 9600 Baud)	
#	All commands are preceded by the # character.
1	The entry in the first position of the command indicates the command group. This command is in Group 1- Communications Port Control.
0	The entry in the second position of the command indicates the command subgroup. In this example, all commands with a second digit of 0 apply to the main port.
0	The entry in the third position of the command is the command digit. In this example, the 0 indicates this command affects the baud rate.
5	The entry in the fourth position of the command indicates the setting. Normally this is a variable and is usually a hexadecimal value from 0 to F. In this example, 5 sets the baud rate to 9600, the factory setting. In some commands, this digit may be a four-place hexadecimal string or a character string.

Command Response Conventions

Like SmartPass commands, responses are preceded with the # character. Many SmartPass commands respond with #Done or #Error indicating the command was or was not recognized and completed. Other commands respond with a four-character identifier followed by one or more values.

Table 5-2 shows an example of a command/reply sequence. This example assumes that a SmartPass with serial number 97001P running version SP2-ACC 1.03D software is connected to a PC running a terminal emulation software package such as Windows Terminal or ProCom. The command sequence verifies that communications are working correctly.

Table 5-2 Sample Command Sequence

Entry	SmartPass Response	Notes
#01 <CR>	#Done <CR/LF>	Switches SmartPass to command mode
#505 <CR>	#Model SP2-ACC Ver 1.03D SN97001P <CR/LF>	Reports the software version and serial number
#00 <CR>	#Done <CR/LF>	Returns SmartPass to data mode

In command discussions, SmartPass response characters may be shown in brackets < >. This indicates that the response is a value in the range of characters. The brackets are not part of the response. For example, the display power fail bit command 520 responds with either a 0 or a 1. In the command discussion, the response is shown as:

```
#PWRB <0-1>
```

The actual SmartPass response is one of the following:

```
#PWRB 0
#PWRB 1
```

In the above example, PWRB is the four-character identifier for *power fail bit*, and the 0 or 1 is the value. All spaces shown in the response are actual spaces sent from SmartPass. In the example above, one space is between the letter B and the number.

Operating Parameters

SmartPass readers maintain their operating parameters in battery-powered RAM so that the parameters will be preserved after a power-down sequence.

Power Fail

The system maintains a power fail flag. The host transmits display power fail bit (command 520) to determine if a power down has occurred. This flag is cleared by both reset reader (command 63) and reset power fail bit (command 65).

Program Download

Program download stores the SmartPass applications software into SmartPass's flash memory. Program download is used to install program upgrades, add features, and to recover from corrupted program data. The download mode supports commands 90, 91, 96, 97, and 99.

Download Considerations

You should consider the following items when performing program download:

- SmartPass does not process tags while in download mode.
- SmartPass accepts only download commands while in download mode. It responds to all other commands with an error message.
- SmartPass will not accept any program data unless a successful erase of flash memory has been performed before transmitting the data. Erasing the flash memory typically takes 7 seconds.
- Exiting from download mode will re-execute startup. If the new software has been loaded without errors, SmartPass will come up in data mode. If a flash checksum error is detected, SmartPass will reenter download mode and transmit a sign-on message with a software version of 0.00 and without a serial number.

Note: *SmartPass uses default communication parameters when operating in download mode (9600 baud, 8 data bits, 1 stop bit, no parity, basic protocol), and does not echo commands in download mode.*

Download Procedures

If Amtech releases a new release of the SmartPass software or if SmartPass seems not to be working properly, you may need to download the software to SmartPass. Use the following procedures to download a new program file. Use the SmartPass Host software included on the SmartPass software diskette provided to dealers.

Follow the instructions in "Connecting SmartPass to the PC" on page 4-7 to connect a PC to SmartPass. Then follow these instructions.

1. Insert the SmartPass software diskette into the A:\ drive.
2. Look in the A:\1620 directory for the file with an extension of .hex. In this example, the file name is SP2ACC.HEX. This is the firmware download file.
3. See "Loading and Starting SmartPass Host" on page 4-15 and "Verifying PC-to-SmartPass Communications" on page 4-15 to launch the SmartPass Host software and connect to SmartPass.
4. Select the `Reader` drop-down menu and click on the `Download` command. This displays the `Select Download File` dialog box shown in Figure 5-1.
5. Type in the name of the download file as shown in Figure 5-1 and click the `OK` button.

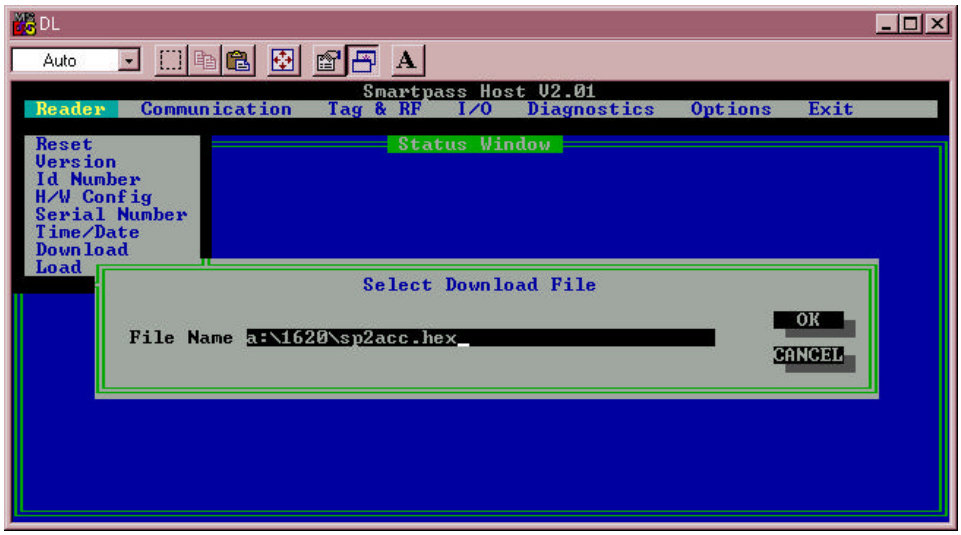

Figure 5-1 Download File Name Entry

The software will begin downloading. When the download is complete, SmartPass Host displays a *Download Complete* message on the message line.

Startup

Upon startup, SmartPass readers transmit a sign-on message or a boot ROM failure message.

Sign-On Message

The sign-on message should appear as shown below:

Model [software version] SNYYYYYY
[Copyright notice]

where *YYYYYY* is the serial number assigned to the SmartPass unit being used.

Serial number 000000 is the default setting and is not a valid number. If this number appears in the sign-on message, either the battery has failed or the serial number has never been stored into reader memory. The appropriate serial number is assigned using command 695.

If the flash memory checksum does not verify, the sign-on message appears as shown below:

Model [Model] Ver 0.00
[Copyright notice]

Boot Failure Message

The software performs a checksum function on itself. The function returns a specific value for the particular version of software. If the value returned is not correct, the boot ROM checksum assumes that locations have been corrupted, and a failure condition exists. If the boot ROM checksum is not correct, a boot failure message is transmitted. If the failure message does not transmit, a communications error has occurred, or the boot failed to the extent that it cannot transmit the failure message.

If the failure message version number equals 0.00 and no serial number exists, the flash memory checksum has failed, and SmartPass is operating out of boot ROM. In this case, SmartPass automatically enters download mode and waits for a new program to be loaded into the flash memory. Follow the instructions in "Program Download" on page 5-5.

Tag/Message Buffer

SmartPass readers maintain a tag buffer in battery-backed RAM to save tag IDs acquired while in the command mode and when data inquiry protocol is used. This buffer holds up to 195 time-stamped messages. Error messages will be transmitted to the host to provide buffer status as it fills. When the buffer fills, subsequent tag IDs will be lost. For more information on how the buffer works, refer to "Command Entry Conventions" on page 5-3 and "6161 Enable Buffer Control Mode" on page 7-28.

6

Communication Protocols

This chapter describes the communication protocols for SmartPass.

Introduction

SmartPass supports the following communication protocols:

- Basic
- Error correcting
- Data inquiry

The following protocol information provides reference information relevant to developing host software.

A two-way message interchange is required in both data mode and command mode when using error correcting protocol (ECP). This interchange is completed by the message recipient returning a message to the sender.

With ECP, all transmissions require a message. If a message is not received, the sender will time out with the same effect as if it had received a negative acknowledgment (from the host) or an *Error* message (from SmartPass).

XON/XOFF flow control is optionally supported. Be careful in the use of XON/XOFF because noise-induced characters may be interpreted by SmartPass as the XOFF character, which would suspend reader output without the host computer's knowledge.

Note: *Amtech recommends that XON/XOFF flow control be disabled while using ECP.*

Communications are performed using the 7-bit ASCII code with optional parity, thus providing easy setup, testing, and diagnostics with standard ASCII terminals and serial printers. Parity must be enabled to achieve the specified undetected error rate.

Each message is framed with the start-of-message (som) and end-of-message (eom) characters so that the host computer can detect the beginning and end of each message. This convention is most important under marginal communications conditions during which the host may receive extraneous noise-induced characters between reader transmissions. In such instances, the host is able to ignore any messages that do not conform to the som...eom frame sequence.

Basic Protocol

With basic protocol, messages sent from SmartPass to the host are transmitted without error checking. Messages sent from the host to SmartPass are also transmitted without error checking. A *Done* or *Error* message is returned to the host by SmartPass for each host transmission.

When the host computer is physically close to SmartPass and no sources of interference exist, the basic protocol provides reliable communications.

The host must be ready to receive reader-transmitted messages, because in basic protocol SmartPass does not wait for the host to acknowledge a message before transmitting the next message. If necessary, the host may halt reader transmissions by using software or hardware flow control. Refer to Chapter 6, “General Software Information,” for flow control information.

Error Correcting Protocol

Wherever the quality of data communications is imperative or may be suspect, ECP can be invoked to ensure the integrity of data transmitted between SmartPass and the host.

Note: *Amtech recommends that basic protocol (not ECP) be used when commands are entered manually at the keyboard.*

Error correction is accomplished with use of a cyclic redundancy check (CRC) value that is based on the message data. The originator (reader or host) calculates the CRC of a message and includes it in the transmitted message.

The recipient (reader or host) also calculates a CRC for the received message. If the transmitted message data is correct, the CRC calculated by the recipient will agree with the CRC calculated by the originator. If the CRCs do not agree, the message is rejected.

Message sequence numbers are also included when using the ECP. These sequence numbers are checked to determine if the message received has the correct sequence number; if not, the message is rejected.

Since the 7-bit ASCII code is used and there are 8 data bits per character, the eighth bit can optionally be used to support parity. Where parity is selected, the CRC calculation includes the parity of each character in the calculation of the CRC value.

Parity is required to achieve the most reliable communications. If parity is enabled, both SmartPass and host must issue a message if any received character has a parity error. However, the message must not be transmitted before receipt of the eom character. SmartPass will issue an *Error* message and the host a negative acknowledgment message.

Data Inquiry Protocol

Data inquiry protocol is a basic protocol option that allows the host to control transmission of reader tag data. The selection of data inquiry protocol affects data mode operation. As SmartPass acquires tags, it buffers them but does not transmit them. Instead, the host must poll SmartPass for each tag by sending a CTRL-E

character (hex 5 digits). SmartPass transmits one message (tag ID or report data) for each CTRL-E it receives until the buffer is empty.

Each tag request message sent by the host consists only of the CTRL-E character; no som or eom characters are sent. SmartPass data transmission (tag ID and report data) format is the same as for basic protocol.

Selection of data inquiry protocol does not affect command mode operation.

Basic and ECP Protocol Format

Note: *In the following text, the symbols < and > are used to represent required variable message data, and the symbols* ***[*** *and* ***]*** *are used to represent optional data. These symbols are not part of the message syntax.*

Reader Transmissions

The basic protocol format and the data inquiry protocol format are shown below.

```
<som><data><eom>
```

The ECP format is shown below.

```
<som><seq><data><crc><eom>
```

where:

`<som>`	Start-of-message (ASCII # character)
`<seq>`	Sequence number (ASCII hex) that represents an even number in the range 0–9, A–E (0, 2, 4, 6, 8, A, C, E). This number is maintained by SmartPass. The host must acknowledge reader transmissions by sending an *ACK* message with the same sequence number received from SmartPass. SmartPass will update its sequence number upon receipt of a valid host *ACK*. If an *ACK* is not received, SmartPass will retransmit the message. A reader transmission sequence is not considered compete until SmartPass receives an *ACK* and updates its sequence number.
`<data>`	An ASCII string up to 72 characters long. This string may contain tag data, a presence without tag report, an input status change report, an *Error02*, *03*, *04*, or *05* message (buffer level report), or a sign-on message. Time, date, and auxiliary data may also be included.
`<crc>`	Cyclic redundancy check (CRC). This field contains four ASCII digits that represent the 16-bit CRC calculated on the message. The CRC is calculated on bytes between the som character and the first CRC byte. When the host receives a properly framed message, it can calculate a 16-bit CRC. The calculation is applied to the character

string that immediately follows the `<som>` and that ends with the character immediately preceding the first `<crc>` character.

The transmitted CRC can then be compared with the binary equivalent of the received `<crc>` characters. If the transmitted and received CRCs are not the same, the message is assumed to have been received in error, and a NAK message response should be transmitted.

<eom> End-of-message characters (ASCII CR and LF). Both a carriage return (CR) and line feed (LF) are included to facilitate the use of terminals and printers.

If the host receives a `<som>` character in the middle of a data message, the message in progress must be aborted. The assumption is that an `<eom>` was lost and SmartPass is in the process of retransmitting the previous message.

ECP Host ACK/NAK Response

With ECP, the host computer responds to all data message transmissions from SmartPass using the following acknowledgment or negative acknowledgment response format.

```
<som><seq><ack/nak><crc><eom>
```

where:

`<som>` Start-of-message (ASCII # character)

`<seq>` An echo of the sequence number received from SmartPass. The sequence number should correspond to the data message that is being positively or negatively acknowledged by the host. If SmartPass receives an *ACK* message with the incorrect sequence number, the data message is retransmitted.

The host computer is responsible for resetting its anticipated data message sequence number to that of SmartPass before communications can resume without error.

`<ack/nak>` ASCII @ character for *ACK* response; ASCII ? character for *NAK* response

`<crc>` *CRC* for the message

`<eom>` End-of-message character (ASCII CR)

SmartPass sets a user-programmable timeout delay at the time each message is transmitted (based on command 612NN, where NN = timeout delay). The timeout delay can be disabled for diagnostic purposes by setting NN = FF.

If the timeout delay expires before SmartPass receives an *ACK* or *NAK* message from the host, a logical *NAK* condition will be declared. If SmartPass receives a *NAK* or timeout, the data message is retransmitted.

When SmartPass receives an *ACK* message, the message is treated as having been properly received by the host. The sequence number is then incremented, and pointers are advanced to the next message in SmartPass's message queue to prepare for sending the next message.

Switch to Command Mode Request

The host may issue command 01 (switch to command mode) while in data mode.

The basic protocol format is shown below.

```
<som><cmd><eom>
```

The ECP format is shown below.

```
<som><seq><cmd><crc><eom>
```

where:

`<som>`	Start-of-message (ASCII # character)
`<seq>`	The sequence number is generated by the host computer separately from that appearing in data messages transmitted by SmartPass.
`<cmd>`	Switch to command mode, command number (ASCII characters 01)
`<crc>`	CRC for the message
`<eom>`	End-of-message character (ASCII CR)

Host Transmission

The host initiates synchronous communications between SmartPass and the host. The host begins a sequence by issuing a command; SmartPass will respond accordingly.

The data inquiry protocol format is shown below.

```
<CTRL-E>
```

The basic protocol format is shown below.

```
<som><cmd>[<data>]<eom>
```

The ECP format is shown below.

```
<som><seq><cmd>[<data>]<crc><eom>
```

where:

`<CTRL-E>`	ASCII Control E (hex 5 digits). When in data inquiry mode, each transmission of a CTRL-E by the host causes SmartPass to transmit one tag ID.
`<som>`	Start-of-message (ASCII # character)

`<seq>`	Sequence number (ASCII hex digit) that represents an odd number in the range 1–9, A–F. The host should use odd sequence numbers in its command because SmartPass uses even sequence numbers in its transmissions. This method eliminates the possibility of a synchronous host command and an asynchronous reader transmission having the same sequence number. Upon receiving a host command, SmartPass is expected to echo the command's sequence number in its response. Therefore, the host must update its sequence number upon receipt of a valid reader message. If the sequence number is not updated before transmission of the next command, SmartPass will not service the new command; it will retransmit its previous message. A command/message sequence is not considered compete until the host updates its sequence number.
`<cmd>`	Command code, a string that contains from two to four ASCII hex characters
`[<data>]`	Optional data field, an ASCII string of as many as 20 characters in length. For example, the set date command is 21MM/DD/YY (command 21 followed by the data string MM/DD/YY).
`<crc>`	CRC for the message
`<eom>`	End-of-message character (ASCII CR)

Reader Command Response

The basic protocol format is shown below.

```
<som><resp><eom>
```

The ECP format is shown below.

```
<som><seq><resp><crc><eom>
```

where:

`<som>`	Start-of-message (ASCII # character)
`<seq>`	Echo of sequence number received in host command message
`<resp>`	Response string. SmartPass will return *Done*, *Error*, or another ASCII string depending on the host transmission. This string can be as many as 72 characters long.
`<crc>`	CRC for the message
`<eom>`	End-of-message character (ASCII CR and LF)

Sample Messages

This section contains examples of typical messages transmitted between SmartPass and the host.

Reader Transmissions

Basic protocol — reader transmission

```
#KING 1302&10:15:42.14 02/24/94<eom>
```

Host response:

No host response for non-ECP

ECP — reader transmission

```
#4KING 1302&10:15:42.14 02/24/94
<crc><eom>
```

where:

#	Start-of-message character
4	Message sequence number
KING 1302	Message data: tag ID is shown. Other sample message data could be as follows: IOST C0 O2 I0 D24 (display I/O status) 04:35:42.45 11/26/95 (display time and date) Error03 (buffer status)
&10:15:42.14 02/24/94	Time and date
<eom>	End-of-message character
<crc>	CRC for the message
@	*ACK* (acknowledgment character) (? returned for a negative acknowledgment)

Host response:

```
#4@<crc><eom>
```

Host Command Transmissions

Basic protocol — host transmission

```
#2010:15:00<eom>
```

Reader response:

```
#Done<eom> or #Error<eom>
```

`#Error<eom>` will be returned if the host transmission is not a legal command with legal data.

ECP — host transmission

#72010:15:00<crc><eom>

where:

#	Start-of-message character
7	Message sequence number
20	Set time command10:15:00Set time data (Not all commands include data. For example, *Turn RF off* host transmission is #7640<eom> where 640 is the command number.)
<crc>	CRC for the message
<eom>	End-of-message character
Done	Command has been invoked by SmartPass.

Reader response:

#7Done<crc><eom> or #7Error<eom>

For some commands, SmartPass will respond with data that relates to the command, such as TT 1, to indicate tag translation enabled for a 534 display tag translation mode command.

#7Error<eom> will be returned if host transmission is not a legal command with legal data.

Timing and Synchronization

The ECP is largely independent of baud rate. The timeout delays previously described are a function of baud rate.

SmartPass supports an ECP timeout, which applies equally to both transmit and receive. In addition, a protection mechanism has been implemented for SmartPass that prevents the assignment of mismatched ECP timeout and baud rate values. SmartPass will not allow the host to alter the ECP timeout (command 612NN) if the specified timeout is too short for the current baud rate. Conversely, SmartPass will not allow the host to alter the baud rate (command 100N) if the specified baud rate is too fast for the current ECP timeout.

The receiver's minimum timeout delay should equal the time to transmit/receive the longest anticipated message at the current baud rate setting. Additional margin should be included for idle periods between characters; for example, processing overhead, if any. The timeout delay period can be expressed as follows:

$$T_{rec}\ (ms) = L \times [T_{char} + T_{idle}]$$

where:

T_{char} (ms)	$1000 \times [\ B_c / R_b\ ]$
Bc	Bits per character (typically 10)

Rb	Baud rate (110–19.2 K)
L	Length of message in characters
Tidle	Maximum idle period between characters (ms)

Likewise, the sender must set a timeout delay equal to the delay of nine characters at the current baud rate setting; for example, the time required to shift out the <eom> character plus the time to shift in the *ACK* or *NAK* message to be received) plus a processing allowance for the receiver to process the message and check for error conditions.

Thus, the sending timeout delay can be expressed as the following:

$$T_{send}\ (ms) = 9 * T_{char} + T_{errchk}$$

where:

Terrckh (ms)	Processing period to perform error checking by receiver

SmartPass supports baud rates between 110 and 19.2 K. The host can remotely set the SmartPass's communications parameters while in the command mode, but Amtech does not recommend this action if communications conditions are marginal.

After SmartPass receives new communications parameters, SmartPass issues the *Done* message and switches to the new configuration immediately. It is the host computer's responsibility to switch its own communications parameters immediately after the transaction is complete.

As noted, the message initiator, such as SmartPass in data mode and the host computer in command mode, starts a timeout counter at the time a message is transmitted. If the timeout expires before receiving a message, a logical NAK condition is declared, and the message is assumed to have been received in error. In this instance, the message is retransmitted until a message is received.

The message recipient, such as the host computer in data mode and SmartPass in command mode, starts a timeout counter when a <som> character is received. If the timeout expires without the receiver receiving an <eom>, the message acquisition is aborted (reset), and the receiver waits for the next <som> character.

If a second <som> character is received before an <eom> character, the message acquisition is aborted (reset), and retransmission of the previous message is assumed to be underway.

These strategies are designed to allow for graceful recovery during periods when communications are marginal or completely lost.

It should be noted that while SmartPass is in command mode, all acquired tag IDs are buffered but not transmitted.

Note: *It is important that the host limit the period during which SmartPass remains in command mode to avoid overflowing SmartPass's tag ID buffer and subsequently losing tag IDs.*

Reader-Addressed Failure Conditions

SmartPass addresses the following failure conditions.

Illegal Sequence Number (Not in the Range 0–9, A–F)

If SmartPass detects an illegal sequence number in a host command message, it discards the received message and does not send a response. If it receives an illegal sequence number in an *ACK* message, it responds as if a *NAK* had been received and retransmits the data.

Wrong Sequence Number

If SmartPass receives the wrong sequence number in an *ACK* message, it responds as if a *NAK* had been received (it retransmits the data).

Bad CRC

If SmartPass detects a bad CRC in a host command message, it discards the received message. No response is sent. If it receives a bad CRC in an *ACK* message, it responds as if a *NAK* had been received, and it retransmits the data.

Illegal Command

If SmartPass receives an illegal command, it returns its standard Error message.

Transmission Timeout

If SmartPass transmits an asynchronous message and the host does not send an *ACK* before the ECP timeout occurs, SmartPass retransmits the message.

Receive Timeout

If SmartPass receives a <*som*> but does not receive a matching <eom> before the ECP timeout occurs, it discards the incomplete message and resets its receiver.

Asynchronous Message/Command Message Collision

If SmartPass transmits asynchronous data at the same time that the host sends a command, SmartPass gives priority to receiving the command. It processes the command and sends a message before it retransmits the asynchronous data.

Host-Addressed Failure Conditions

The host addresses the following failure conditions.

Illegal or Wrong Sequence Number

If the host detects an illegal or wrong sequence number in a reader response, it retransmits the command with the same sequence number. If the host detects an illegal sequence number in an asynchronous reader transmission, it sends a *NAK* message.

Bad CRC

If the host detects a bad CRC in a reader message, it retransmits the command with the same sequence number. If the host detects a bad CRC in an asynchronous reader transmission, it transmits a *NAK* message.

Transmission Timeout

If SmartPass does not respond to a host command within a specified interval, the host retransmits the command with the same sequence number.

Receive Timeout

If the host receives a *<som>* but does not receive a matching *<eom>* within a specified timeout interval, it discards the incomplete message and resets its receiver.

Asynchronous Message/Command Message Collision

If the host receives an asynchronous reader transmission at the same time it transmits a command, it ignores the asynchronous message and waits for SmartPass's response. SmartPass retransmits asynchronous data after it transmits the command message.

ECP Reliability

An undetected error is defined as a message having incorrect data or status, but no parity or CRC errors. An error transaction is defined as a message having either a parity or CRC error. Laboratory testing indicates an undetected error rate of less than one undetected error per 1,000,000 error transactions with parity enabled.

To ensure this error rate is not exceeded, the host must enable parity and adhere closely to the timing specifications discussed previously in this chapter in the "Timing and Synchronization" section.

CRC Calculation

The CRC used by the ECP is based on a 16-bit algorithm. The algorithm, as implemented, operates on 8-bit characters; for example, 7-bit ASCII character plus 1optional parity bit. The 16-bit result is converted to 4 ASCII hex characters and is appended to messages transmitted by SmartPass.

SmartPass accepts 4 ASCII < ` > characters (60 hex) as a wild card CRC in lieu of a valid 4-character CRC to facilitate testing and diagnostic checkout.

SmartPass implements the algorithm with a 512-byte lookup table to reduce the processing overhead requirements.

To simplify the implementation of the CRC algorithm by host software developers, several examples of the calculation are provided in C source code in Table 7-1 through Table 7-4. The calculation may be performed with or without a lookup table, depending on the trade-off between code memory and processing overhead.

Table 6-1 presents an example of a function (CALCCRC) that calculates the CRC through a call to a separate function (UPDCRC). Table 6-2 shows an example of UPDCRC that does not require a lookup table. Table 6-3 contains an example of UPDCRC that does require a lookup table. Table 6-4 shows an example of a function that creates the lookup table.

Table 6-1 Example of Routine to Calculate CRC

```
unsigned short calccrc(char *message)
{
unsigned short crc = 0;
for ( ; *message != (char)0;message++)
   crc = updcrc(*message & 0xff, crc);
return (crc)
}
```

Table 6-2 Example of Routine to Calculate CRC-CCITT without Lookup Table

```
#define BITS_PER_CHAR   8
unsigned short updcrc (unsigned short ch, unsigned
short crc)
{
             register short counter = BITS_PER_CHAR;
             register short temp    = crc;
             while (--counter >= 0)
                if (temp & 0x8000)  {
             temp <<= 1;
             temp += (((ch <<= 1) & 0x0100) != 0);
             temp ^= 0x1021;
                }
                else {
             temp <<= 1;
             temp += (((ch <<= 1) & 0x0100) != 0);
                }
             return(temp);
}
```

Table 6-3 Example of Routine to Calculate CCITT-CRC with Lookup Table

```
#define updcrc(cp, crc)( crctab[((crc >> 8) & 255)]^ (crc << 8) ^ cp
static unsigned short crctab [256] = {
0x0000,   0x1021,   0x2042,   0x3063,   0x4048,   0x50a5,   0x60c6,   0x70e7,
0x8108,   0x9129,   0xa14a,   0xb16b,   0xc18c,   0xd1ad,   0xe1ce,   0xf1ef,
0x1231,   0x0210,   0x3273,   0x2252,   0x52b5,   0x4294,   0x72f7,   0x62d6,
0x9339,   0x8318,   0xb37b,   0xa35a,   0xd3bd,   0xc39c,   0xf3ff,   0xe3de,
0x2462,   0x3443,   0x0420,   0x1401,   0x64e6,   0x74c7,   0x44a4,   0x5485,
0xa56a,   0xb54b,   0x8528,   0x9509,   0xe5ee,   0xf5cf,   0xc5ac,   0xd58d,
0x3653,   0x2672,   0x1611,   0x0630,   0x76d7,   0x66f6,   0x5695,   0x46b4,
0xb75b,   0xa77a,   0x9719,   0x8738,   0xf7df,   0xe7fe,   0xd79d,   0xc7bc,
0x48c4,   0x58e5,   0x6886,   0x78a7,   0x0840,   0x1861,   0x2802,   0x3823,
0xc9cc,   0xd9ed,   0xe98e,   0xf9af,   0x8948,   0x9969,   0xa90a,   0xb92b,
0x5af5,   0x4ad4,   0x7ab7,   0x6a96,   0x1a71,   0x0a50,   0x3a33,   0x2a12,
0xdbfd,   0xcbdc,   0xfbbf,   0xeb9e,   0x9b79,   0x8b58,   0xbb3b,   0xab1a,
0x6ca6,   0x7c87,   0x4ce4,   0x5cc5,   0x2c22,   0x3c03,   0x0c60,   0x1c41,
0xedae,   0xfd8f,   0xcdec,   0xddcd,   0xad2a,   0xbd0b,   0x8d68,   0x9d49,
0x7e97,   0x6eb6,   0x5ed5,   0x4ef4,   0x3e13,   0x2e32,   0x1e51,   0x0e70,
0xff9f,   0xefbe,   0xdfdd,   0xcffc,   0xbf1b,   0xaf3a,   0x9f59,   0x8f78,
0x9188,   0x81a9,   0xb1ca,   0xa1eb,   0xd10c,   0xc12d,   0xf14e,   0xe16f,
0x1080,   0x00a1,   0x30c2,   0x20e3,   0x5004,   0x4025,   0x7046,   0x6067,
0x83b9,   0x9398,   0xa3fb,   0xb3da,   0xc33d,   0xd31c,   0xe37f,   0xf35e,
0x02b1,   0x1290,   0x22f3,   0x32d2,   0x4235,   0x5214,   0x6277,   0x7256,
0xb5ea,   0xa5cb,   0x95a8,   0x8589,   0xf56e,   0xe54f,   0xd52c,   0xc50d,
0x34e2,   0x24c3,   0x14a0,   0x0481,   0x7466,   0x6447,   0x5424,   0x4405,
0xa7db,   0xb7fa,   0x8799,   0x97b8,   0xe75f,   0xf77e,   0xc71d,   0xd73c,
0x26d3,   0x36f2,   0x0691,   0x16b0,   0x6657,   0x7676,   0x4615,   0x5634,
0xd94c,   0xc96d,   0xf90e,   0xe92f,   0x99c8,   0x89e9,   0xb98a,   0xa9ab,
0x5844,   0x4865,   0x7806,   0x6827,   0x18c0,   0x08e1,   0x3882,   0x28a3,
0xcb7d,   0xdb5c,   0xeb3f,   0xfb1e,   0x8bf9,   0x9bd8,   0xabbb,   0xbb9a,
0x4a75,   0x5a54,   0x6a37,   0x7a16,   0x0af1,   0x1ad0,   0x2ab3,   0x3a92,
0xfd2e,   0xed0f,   0xdd6c,   0xcd4d,   0xbdaa,   0xad8b,   0x9de8,   0x8dc9,
0x7c26,   0x6c07,   0x5c64,   0x4c45,   0x3ca2,   0x2c83,   0x1ce0,   0x0cc1,
0xef1f,   0xff3e,   0xcf5d,   0xdf7c,   0xaf9b,   0xbfba,   0x8fd9,   0x9ff8,
0x6e17,   0x7e36,   0x4e55,   0x5e74,   0x2e93,   0x3eb2,   0x0ed1,   0x1ef0,
};
```

Table 6-4 Example of Routine to Create Lookup Table

```
#include <stdio.h>

#define MAX_CHAR     256
#define BITS_CHAR        8
#define SIGN_BIT         0x8000
#define POLY            0x1021
unsigned short crctab [MAX_CHAR];
main ()
             {
             unsigned short ch;
             unsigned short workval;
             unsigned short bit;
             unsigned short carry;
             for (ch = 0; ch != MAX_CHAR; ch++)  {
             workval = ch << BITS_CHAR;
             for (bit = BITS_CHAR; bit != 0; bit--)
{
             carry = (workval & SIGN_BIT);
             workval <<= 1;
             if (carry)
             workval ^= POLY;
             }
             crctab[ch] = workval;

             }
             for (ch = 0; ch != MAX_CHAR; ch++)
             printf("0x%04x\n", crctab[ch]);
             }
```

7

Commands

This chapter discusses the host-transmitted commands that are used to control SmartPass configuration and operation.

Introduction

SmartPass is delivered from the factory with specified default settings that determine how SmartPass operates. These settings can be changed and additional features can be controlled by commands transmitted by the host. The commands can be transmitted with specialized host software or by manually entering the commands at the host keyboard if the host is in terminal emulation mode. SmartPass can also communicate with ASCII terminals and printers.

Note: *If you are using Wiegand mode, you must connect the PC, laptop, or terminal emulator to SmartPass using the RS-232 or RS-422 interface before attempting to send commands to the reader. You can leave the Wiegand interface connected during this procedure.*

Operating Modes

SmartPass has three modes of operation: data mode, command mode, and download mode. The software for SmartPass contains two separate programs — one in boot ROM and one in flash EPROM. The boot ROM program has control of SmartPass on startup and when operating in download mode. The flash EPROM program has control of SmartPass during data mode and command mode operation and holds the application code. Together, they control SmartPass in the three modes of operation.

Data Mode

SmartPass is in the data mode upon power-up. While in the data mode, SmartPass sends all communications as data messages, such as tag IDs and reports, to the host computer. Reports provide information on input status changes (input0 and input1), a presence without tag report, and buffer overflow information. The host computer can send only three commands to SmartPass while in data mode:

- Command 01 — switch to command mode — changes SmartPass from the data mode to the command mode. See "01 Switch to Command Mode" on page 7-5.
- Command 05 — switch to download mode — allows the host computer to download new software into SmartPass. See "05 Switch to Download Mode" on page 7-6.
- Command 8110 — perform system check tag test — performs a single system check tag test. See "8110 Perform System Check Tag Test" on page 7-41.

Note: *SmartPass transmits tag identification (ID) codes to the host computer when SmartPass is in data mode. If SmartPass is left in the command mode too long, the tag*

buffer will fill up and any additional tag IDs will be lost. You must return SmartPass to data mode as soon as possible to ensure proper transmission of acquired tag IDs. For information on the data mode, refer to the "Data Mode" on page 7-3*. For information on the tag buffer and buffer control, refer to* "6160 Disable Buffer Control Mode (Factory Default)" on page 7-27 *and* "6161 Enable Buffer Control Mode" on page 7-28*.*

Command Mode

While in the command mode, the host computer sends commands to SmartPass. Host-transmitted commands can be used to control the operation and configuration of the reader. After SmartPass receives a command, it transmits a command response message. Typically, the command message contains *Error*, *Done*, or data relating specifically to the command request. These messages may be of variable length since some commands require information as part of the message; for example, time and date.

The host computer sets a timeout delay when the command is transmitted to SmartPass. If the timeout delay expires before the host receives a command message from SmartPass, a logical *NAK* condition is declared. The host then retransmits the command request message.

Communications can be lost if the host computer attempts to send certain commands under marginal communication conditions. For example, if the host computer transmits the command request to change the baud rate and SmartPass properly receives the request and transmits the *Done* message, one of the two conditions described below may occur.

If the host computer receives the *Done* message, then both the host and SmartPass switch to the new baud rate, and communication is maintained.

Note: *SmartPass changes the baud rate immediately after issuing the Done message.*

However, if the *Done* message transmitted by SmartPass is not received by the host, the host would assume that the command was not properly sent and would not switch to the new baud rate.

Caution

Because this condition would lead to a loss of communications, the host should not attempt to change communications parameters or protocols during marginal communications conditions.

Download Mode

In download mode, SmartPass allows the host to download new software and supports a limited set of commands — #90, #91, #96, #97, and #99. SmartPass does not process tags while in download mode. See "90 Load Program Block" on page 7-42 through "99 Exit Download Mode" on page 7-43.

Command List

Reader commands are divided into eight groups based on primary function. The following sections provide information about each command in command number order. Refer to Appendix D for a listing of commands in alphabetical order.

Note: *In the following text, the symbols < and > represent required variable message data. These symbols are not part of the message syntax.*

Reader Mode Control — Command Group 0

Group 0 commands control reader mode. The mode determines whether the reader is transmitting data to or receiving data from a host computer or terminal.

00 Switch to Data Mode (Factory Default)

Command 00 switches the reader to data mode, which allows the reader to transmit tag data (ID codes) to the host. The reader enters data mode on power up.

While operating in data mode, the reader accepts the following commands:

- Switch to command mode (01)
- Switch to download mode (05)
- Invoke check tag (8110)

Reader message:

Done

01 Switch to Command Mode

Command 01 switches the reader to command mode, which allows the reader to accept commands from a host or terminal. While in command mode, the reader does not transmit tag IDs to the host as they are acquired. The IDs are stored in the reader's tag buffer for transmission when requested by the host.

While operating in command mode, the reader continuously monitors the level of its tag buffer. If the buffer becomes 75% full, the reader transmits an *Error 04* message to the host. If the buffer becomes 100% full, it transmits an *Error 02* message. When the buffer is full, incoming tag IDs cannot be buffered, and they are lost. The reader does not resume asynchronous tag transmission until it is returned to data mode (command 00). Upon return to data mode, the reader begins to empty the tag buffer. When the

buffer is no longer full, the reader transmits the *Error 03* message indicating that the tag buffer has been partially cleared, and new IDs are again being stored. When the buffer has emptied to 50%, the reader transmits the *Error 05* message.

Reader message:

Done

05 Switch to Download Mode

Command 05 switches the reader to download mode, which allows an external host computer to download new software into the reader flash memory.

While operating in download mode, the reader accepts a limited set of commands: load program block (90), verify flash checksum (91), erase flash memory (96), perform destructive memory test (97), and exit download mode (99).

Note: *While in download mode, the reader communication port parameters are fixed at the following factory default settings: 9600 baud, 8 data bits, 1 stop bit, no parity, software flow control (XON/XOFF), basic protocol.*

While in download mode, the reader does not echo host commands.

To exit the download mode, the host must transmit exit download mode command 99. The reader re-executes startup to ensure proper initialization of operating parameters and to verify the boot ROM and flash memory checksum values. The reader does not accept the switch to download mode command 05 if it is operating in data mode; it must first be switched to command mode (command 01).

Reader message:

Done or *Error*

06 Transmit Buffer Entry

Command 06 allows the host to request data (tag IDs and reports) from the reader. This command is supported if ECP is selected (command 611) and buffer control has been enabled (command 6161). If the reader receives command 06 and it has data in its message buffer, it transmits the buffered message of highest priority. Report data is not transmitted until all tag IDs have been transmitted.

If the reader's message buffer is empty, it sends the *Done* message. The reader returns an *Error* message if it receives this command when ECP and/or the buffer control have not been enabled.

Reader message:

Done	Buffer empty
Error	Buffer control mode not enabled
Message	IDs or reports in buffer

Communications Port Control — Command Group 1

Group 1 commands configure the parameters used by SmartPass to communicate with a host computer or terminal. These commands set baud rate, stop bits, parity, and end-of-line delay.

100N Select Baud Rate

Command 100N selects the reader baud rate. The factory default setting is 9600 baud. The N variable specifies the baud rate as follows:

Command	Baud Rate Selected
1000	110
1001	300
1002	1200
1003	2400
1004	4800
1005	9600 (factory default)
1006	19.2 K

The reader transmits *Error* if the currently selected ECP timeout is not sufficient for the requested baud rate. The timeout must be increased before the select baud rate command can be retransmitted.

Reader message:

Done or *Error*

101N Select Stop Bits

Command 101N selects the number of stop bits for reader character transmission. The factory default setting is 1 stop bit. The N variable specifies the number of stop bits as follows:

Command	Stop Bits Selected
1010	1 (factory default)
1011	2

Reader message:

Done

102N Select Parity

Command 102N selects the reader parity setting. The factory default setting is parity disabled. The *N* variable specifies parity as follows:

Command	Data Bits	Parity Selected
1020	8	Disable parity (factory default)
1021	7	Select even parity
1022	7	Select odd parity

Reader message:

Done

Real-Time Clock — Command Group 2

Group 2 commands control the real-time clock which maintains the SmartPass internal time and date. This time and date can be appended to IDs, error messages, and sensor input reports. An internal battery supports the clock, so time and date are preserved if main power is lost.

20 Set Time

Command 20 sets the time. Enter the time in the proper format: two-digit decimal entries with no spaces between characters and using colons as delimiters. The entry format is as follows:

20HH:MM:SS or 20HH:MM:SS:hh

where:

HH represents hours (00 to 23).

MM represents minutes (00 to 59).

SS represents seconds (00 to 59).

hh represents hundredths of a second (00 to 99).

: is the time delimiter.

If hundredths of a second are not specified, the reader sets the hundredths register to 00.

Reader message:

Done or Error

21 Set Date

Command 21 sets the date. Enter the date in the proper format: two-digit decimal entries with no spaces between characters and using forward slashes "/" as delimiters. The entry format is as follows:

21MM/DD/YY

where:

MM	represents the month (01 to 12).
DD	represents the day (01 to 31).
YY	represents the last two digits of the year (00 to 99).
/	is the date delimiter.

Reader message:

Done or Error

22 Display Time and Date

Command 22 displays the reader's current time and date. One space separates the time and the date output.

Reader message:

HH:MM:SS.hh MM/DD/YY

where:

HH	represents hours.
MM	represents minutes.
SS	represents seconds.
hh	represents hundredths of seconds.
:	is the time delimiter.
MM	represents the month.
DD	represents the day.
YY	represents the last two digits of the year.
/	is the date delimiter.

Append Information — Command Group 3

Group 3 commands append useful information to reader transmissions, such as time and date, IDs, error messages, and sensor input reports. The reader is set at the factory to append time and date to all IDs. Auxiliary information, such as reader number, antenna number (or manual entry code), number of times the previous tag was read, and sensor input status can also be appended to the ID using the Group 3 commands.

30N Append Time and Date Selection

This command selects the option of appending the time and date to transmitted IDs, error messages, presence without tag reports, and input status change reports. The factory default setting is time and date appended (command 302).

The reader returns an *Error* message if its tag buffer contains data. The reset reader command 63 may be transmitted to clear the buffer; however, tag ID data will be lost. If this is unacceptable, allow the buffer to empty before re-issuing append time and date command 30N.

Command	Append Option
300	No time and date appended
302	Time and date appended (factory default)

The reader transmits messages with time and date appended as follows. One space separates the time from the date.

<string>&<HH:MM:SS.hh MM/DD/YY>

where:

string is a tag ID, error message, or report.

& separates <string> from the time and date.

HH:MM:SS is the time delimiter.

MM/DD/YY is the date delimiter.

Reader message:

Done or Error

31N Append Auxiliary Information Selection

This command selects the option of appending auxiliary information to transmitted IDs, presence without tag reports, and input status change reports. Auxiliary information is not appended to error messages. The factory default setting is no auxiliary information appended.

Command	Append Option
310	No auxiliary information appended (factory default)
311	Auxiliary information appended

The reader returns an *Error* message if its tag buffer contains data. The reset reader command 63 may be transmitted to clear the buffer; however, tag ID data will be lost. If this is unacceptable, allow the buffer to empty before re-issuing append auxiliary information command 31N.

The reader transmits messages with auxiliary information appended as:

<message data>%<xx-y-zz-q>

where:

%	separates the auxiliary information and signals the host computer that auxiliary information is appended.
xx	is the reader ID (value can be set with command 60NN).
-	is the auxiliary information delimiter.
y	is the antenna number (value fixed at 0).
zz	is the number of reads of the previous tag (00 to FF hexadecimal).
q	is the current status of input0 and input1 (0 to 3). Refer to "526 Display I/O Status" on page 7-18. These values are inverted if input inversion is enabled with command 6941.

Reader message:

Done or Error

ID Filtering — Command Group 4

Group 4 commands set criteria for filtering (buffering or discarding) ID codes. These commands are useful for eliminating duplicate ID codes and filtering unwanted IDs obtained from fringe areas of the SmartPass read zone.

40 Transmit All ID Codes

Command 40 instructs the reader to transmit all IDs without regard for uniqueness.

Note: *Command 40 is for diagnostic purposes only. The tag buffer must be empty before the reader accepts this command.*

After diagnostics are complete, reinstate the uniqueness check using select unique ID code criteria (command 410N).

Reader message:

Done or Error

410N Anti-Passback (Select Unique ID Code Criteria)

This command instructs the reader to buffer and transmit ID codes according to the following test: an ID is buffered if, in the time interval since the new ID was last received, previously decoded IDs have changed value at least *N*+1 times, or the

uniqueness timeout has occurred. IDs that do not pass the test are not buffered. The factory default setting is command 4100, which selects a separation of one ID.

Command	Uniqueness Criteria
4100	Separation of 1 ID (factory default)
4101	Separation of 2 IDs

Each time the reader receives a tag ID, it compares the ID with the contents of a comparison register. This register contains the following two items:

Item 1 Most recently acquired ID

Item 2 Second-most recent ID (if different from item 1)

When the uniqueness filter is set to a separation of one ID, the newly acquired ID is transmitted only if it is different from item 1. When the uniqueness filter is set to a separation of two IDs, the newly acquired ID is transmitted only if it is different from both items 1 and 2.

Note: *A new ID can fail the filter test and not be transmitted; however, it remains stored in the comparison register.*

The uniqueness test has a 2-minute time limit. If an ID is buffered, it will not be accepted again unless it arrives at the reader more than 2 minutes from the previous arrival or until the receipt of one or more other IDs reset the uniqueness.

Reader message:

Done

43 Buffer All ID Codes

Command 43 buffers all acquired ID codes. It effectively cancels any uniqueness criteria previously set by select unique ID code criteria command 410N.

Note: *Command 43 is for diagnostic purposes only.*

After diagnostics are complete, reset the select unique ID code criteria using command 410N.

Reader message:

Done

450 Disable Wiegand Mode (Factory Default)

Command 450 is a default set in the factory to disable Wiegand mode.

Reader message:

Done

451 Enable Wiegand Mode

Command 451 enables Wiegand mode, which allows the reader to transmit data in a format that emulates the output of a magnetic card reader.

If Wiegand mode is enabled, the reader will transmit Wiegand-formatted data through the Wiegand interface and ASCII data through the serial port interface.

In Wiegand mode, the reader outputs data from Wiegand-programmed tags via the Wiegand interface (the red/blue pair for data1/data0; yellow/black pair for logic ground). Tags that are not Wiegand-formatted will not be transmitted through the Wiegand interface.

Reader message:

Done or Error

452 Disable Tag Translation Mode (Factory Default)

Command 452 disables tag translation mode. Incoming full-frame tags will be directly converted to ASCII. They will not be translated from Association of American Railroads (AAR) and American Trucking Associations (ATA) format to ASCII.

Reader message:

Done

453 Enable Tag Translation Mode

Command 453 enables the translation of tags in AAR and ATA formats. Specific data fields, such as owner ID and car number, will be extracted from these tags, translated according to AAR or ATA standards, and converted to ASCII. Tags that are not programmed in AAR or ATA format will be directly converted to ASCII. The reader will not attempt to translate data from half-frame or dual-frame tags.

Reader message:

Done

46NN Set Wiegand Retransmit Interval

Command 46NN sets the time delay to control the reader retransmission of Wiegand data of a tag remaining in the read zone.

where:

NN where NN is a hexadecimal code from 01 to FF

For example, 10 = 16 seconds and FF = 255 seconds. The factory default is 4601 (1 sec). Uppercase or lowercase characters are allowed for NN; for example, hex digits A to f.

Reader message:

Done or Error

48N Select Dual-Frame Processing Mode

Command 48N selects the dual-frame tag processing mode. Dual-frame tags consist of an A frame and a B frame. The dual-frame processing mode selected determines if the A or B frame will be used to reset uniqueness. It also specifies whether the A or B or both frames will be transmitted to the host. The handshake count for a dual-frame tag equals the number of A frame handshakes plus the number of B frame handshakes.

where:

N	= 0 to 3
0	reset uniqueness on A, transmit A; B frames are counted and then discarded (factory default)
1	reset uniqueness on B, transmit B; A frames are counted and then discarded
2	reset uniqueness on A, transmit both A and B
3	reset uniqueness on B, transmit both A and B

Reader message:

Done

If both frames of a dual-frame tag are transmitted to the host, the data is formatted as follows:

A...A	represents A frame data (20 characters)
B...B	represents B frame data (20 characters)

A and B frame data strings are separated by one blank character. Command 302 can be used to append date and time data, and command 311 can be used to append auxiliary information.

Examples:

A...A B...B

A...A B...B&HH:MM:SS.hh MM/DD/YY

A...A B...B%nn-0-hh-q

A...A B...B&HH:MM:SS.hhMM/DD/YY%nn-0-hh-q

Reader Status — Command Group 5

Group 5 commands provide status reports on the parameters and operation of the reader.

505 Display Software Version

Command 505 displays the reader model number, software version information, and assigned serial number.

Reader message:

Model SP2-ACC Ver X.XXD SNYYYYYY

where:

X.XXD	is the version number.
YYYYYY	is the serial number expressed in decimal digits (0 to 9) with the first two digits representing the year.

506 Display Hardware Configuration Information

Command 506 displays hardware configuration information stored into the reader memory during system testing.

Reader message:

An ASCII string from 1 to 20 characters in length

520 Display Power Fail Bit

Command 520 displays the value of the reader power fail bit. The power fail bit changes from 0 to 1 when power to the reader is interrupted. To reset the bit, use reset reader command 63 or reset power fail bit command 65. On initial power-up, the host transmits one of these two commands to clear the power fail bit.

Reader message:

PWRB P<0 to 1>R0

where:

P0	no power failure detected
P1	power failure detected
R0	not applicable to SmartPass

521 Display Reader ID Number

Command 521 displays the reader ID that is sent in the auxiliary data field.

Reader message:

RDID xx

where:

xx	01 to FF (hexadecimal)

522 Display Communications Port Parameters

Command 522 displays the selected communications port parameters, including the baud rate (100N), the number of stop bits (101N), the parity scheme (102N), and the end-of-line delay.

Reader message:

MAIN B<0 to 6> S<0 to 1> P<0 to 2> D0

where:

B0	110 baud
B1	300 baud
B2	1200 baud
B3	2400 baud
B4	4800 baud
B5	9600 baud (factory default)
B6	19.2 kbps
S0	one stop bit (factory default)
S1	two stop bits
P0	no parity (factory default)
P1	even parity
P2	odd parity
D0	00 ms end-of-line delay (fixed)

One space is required between each value. For example, if factory default settings are assigned, the reader message is:

MAIN B5 S0 P0 D0

Indicating 9600 baud, one stop bit, no parity, and 0 ms end-of-line delay

Note: *The information transmitted in response to command 522 applies to data and command mode operation only. While operating in download mode, default communication parameters are always used.*

524 Display Appended Information Status

Command 524 displays the information being appended to the reader transmissions. Appended information is selected using command 30N to append time and date selection and command 31N to append auxiliary information.

Reader message:

IDAP T<0 to 1> D<0 to 1> X<0 to 1>

where:

T0	time not appended
T1	time appended (factory default)
D0	date not appended
D1	date appended (factory default)
X0	auxiliary information not appended (factory default)
X1	auxiliary information appended

One space is required between each value. For example, if factory default settings are assigned, the reader response is

IDAP T1 D1 X0

Indicating time and date appended and auxiliary information not appended

Note: *Time and date may be appended to ID codes, error messages, presence without tag reports, and input status change reports. Auxiliary information may only be appended to ID codes, presence without tag reports, and input change reports.*

525 Display Communications Protocol Status

Command 525 displays selected communications protocol command 61N, selected mode of flow control command 614N, and ECP timeout command 612NN.

Reader message:

ECPS P<0 to 2> T<01 to FF> X<0 to 2>

where:

P0	basic protocol enabled (factory default)
P1	ECP enabled
P2	data inquiry protocol enabled
Txx	ECP timeout where xx = 01 to FE (hexadecimal) timeout (ms) = 50 * xx if xx = FF timeout disabled
X0	flow control disabled
X1	software flow control enabled (factory default)
X2	hardware flow control enabled

For example, if factory default settings are assigned, the reader message is:

ECPS P0 TFE X1

Meaning: basic protocol enabled, an ECP timeout of 254 (12,700 ms, 12.7 sec), and software flow control enabled

526 Display I/O Status

Command 526 displays the current input/output status. The reader message indicates whether outputs are being controlled externally by the host through output control commands (620N) or internally through predefined output mode command 621. It also displays the current status of two outputs, two inputs, and the selected output pulse duration (set by output pulse duration command 67N).

Reader message:

IOST C<0 to 1> O<0 to 3> I<0 to 3> D<0 to F>

where:

C0	host controls outputs
C1	predefined output mode
O0	both outputs off
O1	output0 on
O2	output1 on
O3	both outputs on
I0	both inputs false
I1	input0 true
I2	input1 true
I3	both inputs true
D0	4 ms output pulse duration
D1	8 ms output pulse duration
D2	12 ms output pulse duration
D3	16 ms output pulse duration
D4	20 ms output pulse duration
D5	24 ms output pulse duration
D6	32 ms output pulse duration
D7	40 ms output pulse duration
D8	48 ms output pulse duration
D9	60 ms output pulse duration

DA	76 ms output pulse duration
DB	152 ms output pulse duration
DC	228 ms output pulse duration (factory default)
DD	300 ms output pulse duration
DE	376 ms output pulse duration
DF	752 ms output pulse duration

Note: *The first character is alpha; the second character is numeric.*

The following table shows the output0 and output1 open/closed conditions for the output status displays.

Output Status	**Output0 Wire Pair**		**Output1 Wire Pair**	
	Orange/Black	**Brown/Black**	**White/Black**	**Green/Black**
O0	Closed	Open	Closed	Open
O1	Open	Closed	Closed	Open
O2	Closed	Open	Open	Closed
O3	Open	Closed	Open	Closed

The following table shows the input0 and input1 open/closed conditions for the input status displays.

Input	**Input0 Wire Pair**	**Input1 Wire Pair**
Status	**Green/Red**	**Blue/Black**
I0	Open	Open
I1	Closed	Open
I2	Open	Closed
I3	Closed	Closed

527 Display RF Status

Command 527 displays the current status of the RF module. The reader response indicates whether RF is controlled externally by the host (command 640N) or internally by input (command 641). It also displays the current RF status and the uniqueness timeout, which is fixed at 2 minutes.

Reader message:

RFST C<0 to 1> O<0 to 1> T1 Fx Rxx

where:

C0	RF controlled by host
C1	RF controlled by presence sensor on input0, the red/green pair (factory default)
O0	RF off
O1	RF on
T1	uniqueness timeout of 2 minutes (fixed)
Fxx	F = RF output frequency, xx = 00 to 34 hexadecimal offset in 500 kHz from 902 MHz. If an invalid frequency value is stored (corrupted NVRAM), then xx = “XX” to indicate an error in the frequency setting.
Rxx	R = RF output range (distance), xx = 00 to IF hexadecimal range value

For example, if factory default settings are assigned, the reader message is:

RFST C1 O0 T1

Meaning: RF-by-input control, RF signal off, and uniqueness timeout of 2 minutes

529 Display Presence Input Status

Command 529 displays the parameters associated with presence detection and RF control. The reader’s message indicates if presence without tag reports are enabled/disabled (690N), if input inversion is enabled/disabled (694N), and the minimum presence true period (always true). It also reports the selected RF timeout (693N) and the selected means of RF-off control (692N). If presence without tag reports is enabled (6901), the reader transmits a report if a presence is detected without the subsequent acquisition of a valid tag.

Reader message:

PRST P<0 to 1> D0 A<0 to 2> T<0 to F> I<0 to 1>

where:

P0	presence without tag reports disabled (factory default)
P1	presence without tag reports enabled
D0	minimum presence true period of 0 ms (fixed)
A0	RF-off on timeout only
A1	RF-off on timeout or tag
A2	RF-off on timeout or presence condition false (factory default)

T0	RF timeout of 0 ms (always expired)
T1	4 ms
T2	8 ms
T3	12 ms
T4	20 ms
T5	24 ms
T6	32 ms
T7	48 ms
T8	60 ms
T9	92 ms
TA	152 ms
TB	300 ms
TC	452 ms
TD	600 ms
TE	752 ms
TF	infinite, never expires (factory default)
I0	input inversion disabled (factory default)
I1	input inversion enabled

For example, if factory default settings are assigned, the reader message is:

PRST P0 D0 A2 TF I0

Meaning: presence without tag reports disabled, minimum presence true period is 0, RF-off control on timeout or presence false, infinite RF timeout, and input inversion disabled

530 Display RF0 Filter Status

Command 530 displays the parameter set for the RF channel input, including the selected unique ID code criteria (command 410N) and the valid ID code criteria, which are fixed at one acquisition.

Reader message:

RF0S U<0 to 3> V0

where:

U0	one ID separation (factory default)
U1	two ID separations
U2	transmit all IDs

U3	buffer all IDs
V0	valid ID code criteria of one acquisition (fixed)

For example, if factory default settings are assigned, the reader message is:

RF0S U0 V0

Meaning: separation of one ID for uniqueness filtering and a valid ID code criteria of one acquisition

532 Display Wiegand Mode Status

Command 532 displays Wiegand mode status enabled or disabled.

Reader message:

TOF <0 to 1>

where:

0	Wiegand mode disabled
1	Wiegand mode enabled

533 Display Wiegand Retransmit Interval

Command 533 displays the Wiegand retransmit interval. This interval specifies the delay (in seconds) before the reader retransmits Wiegand data for a tag still in the read zone. The factory default is 1 second.

Reader message:

WTI <01 to FF>

where:

01 to FF	seconds (1–255) in hexadecimal

534 Display Tag Translation Mode Status

Command 534 displays tag translation mode status, enabled or disabled. If tag translation mode is enabled, incoming full-frame tags in AAR or ATA format are translated according to ISO standards. Refer to "452 Disable Tag Translation Mode (Factory Default)" on page 7-13 and "453 Enable Tag Translation Mode" on page 7-13 for more information.

Reader message:

TT <0 to 1>

where:

0	tag translation mode disabled
1	tag translation mode enabled

535 Display Buffer Control Status

Command 535 displays buffer control mode status, enabled or disabled. Refer to "6160 Disable Buffer Control Mode (Factory Default)" on page 7-27 and "6161 Enable Buffer Control Mode" on page 7-28 for more information.

Reader message:

BCM <0 to 1>

where:

0	buffer control mode disabled
1	buffer control mode enabled

536 Display Dual-Frame Processing Mode

Command 536 displays the selected dual-frame processing mode. The mode used determines if frame A or frame B of a dual-frame tag resets uniqueness and which frame(s) are transmitted to the host, A, B, or both. Refer to "48N Select Dual-Frame Processing Mode" on page 7-14 for more information.

Reader message:

DUAL <0 to 3>

where:

0	reset uniqueness on A, transmit A
1	reset uniqueness on B, transmit B
2	reset uniqueness on A, transmit both A and B
3	reset uniqueness on B, transmit both A and B

537 Display Echo Status

Command 537 displays echo mode status. In basic protocol (610) and data inquiry protocol (613), the reader may be configured to enable (6171) or disable (6170) the echo of received commands. Refer to "6170 Disable Echo Mode" on page 7-29 and "6171 Enable Echo Mode (Factory Default)" on page 7-30 for more information.

Reader message:

ECHO <0 to 1>

where:

0	echo status disabled
1	echo status enabled

540 Display Flash Checksum

Command 540 displays the flash memory checksum.

Reader message:

PCKS I0000 Exxxx

where:

0000	not applicable to SmartPass
xxxx	represents the 4-byte ASCII representation of the flash memory checksum

543 Display Boot Checksum

Command 543 displays the boot ROM checksum.

Reader message:

BCKS xxxx

where:

xxxx	represents the 4-byte ASCII representation of the boot ROM checksum

550 Display Periodic Check Tag Status

Command 550 displays parameters for the periodic check tag function. The periodic check tag function may be enabled by command 8120 or disabled by command 810. The check tag interval is fixed at 30 minutes. If the check tag function is enabled by command 8110, the periodic function will be disabled.

Reader message:

SCTS M<0 to 1> T5

where:

M0	periodic check tag disabled (factory default)
M1	periodic check tag enabled
T5	periodic check tag interval of 30 minutes (fixed)

551 Display Selected Check Tag Option

Command 551 displays the currently selected check tag option. Refer to "8160 Select Internal Check Tag (Factory Default)" on page 7-41 for more information.

Reader message:

CTAG <0 to 1>

where:

0	internal check tag option enabled (factory default)
1	external check tag option enabled

560 Display Input Status Change Report Options

Command 560 displays the input status change reporting options. Status change reporting may be disabled by command 82N.

Reader message:

SSTC E<0 to 1>M<0 to 3>

where:

E0	input status change reports disabled (factory default)
E1	input status change reports enabled
M0	reporting disabled (factory default)
M1	changes on input0 reported
M2	changes on input1 reported
M3	changes on either input reported

For example, if factory default settings are assigned, the reader message is:

SSTC E0 M0

Meaning: input status change reports disabled on both input0 and input1

Reader Control Functions — Command Group 6

Group 6 commands set reader control functions such as reader ID, communication protocol, output pulse, and RF control.

60NN Set Reader ID Number

Command 60NN sets the reader ID that will be sent in the auxiliary data field (command 311). Uppercase or lowercase characters are allowed for NN; for example, hex digits A–F or a–f

where:

NN	00 to FF (hex for 0 to 255, factory default = 00)

Reader message:

Done

610 Select Basic Protocol (Factory Default)

Command 610 selects the basic communications protocol. Refer to "Basic Protocol" on page 6-3 for more information.

Reader message:

Done or Error

611 Select Error Correcting Protocol

Command 611 selects the error correcting protocol. Refer to "Error Correcting Protocol" on page 6-4 for more information.

Reader message:

Done or Error

Caution

Do not switch to error correcting protocol (command 611) unless the host is prepared to acknowledge each reader transmission.

612NN Select Error Correcting Protocol Timeout

Command 612NN selects the timeout interval for ECP. This timeout applies to the transmission of tag, report, and error messages and to the receipt of host commands. The transmit timeout is initiated immediately after the end-of-message sequence CR/LF is transmitted. If the host does not acknowledge the message within the specified interval, the reader will time out and retransmit the message.

The receive timeout is initiated upon receipt of the start-of-message character (#). If the end-of-message character (CR) is not received within the specified interval, the reader will discard the partially received message and reset its receiver.

The value for NN specifies the timeout interval as follows:

ms	50 * NN for NN = 01 to FE (1–254)
FE	factory default (12,700 ms, 12.7 sec)
FF	disables the error correcting protocol timeout

Uppercase or lowercase characters are allowed for NN; for example, hex digits A–F or a–f.

Reader message:

Done or Error

A protection mechanism prevents the assignment of mismatched ECP timeout baud rate values. The reader transmits *Error* in response to command 612NN if the specified timeout (NN) is too short for the current baud rate. Refer to "Timing and Synchronization" on page 6-10 for more information.

613 Select Data Inquiry Protocol

Command 613 selects the data inquiry protocol. Refer to "Data Inquiry Protocol" on page 6-4 for more information.

Reader message:

Done or Error

614N Select Flow Control Option

This command selects the flow control option for reader-to-host communications. The factory default setting is software flow control (XON/XOFF) enabled. In download mode, flow control is not host-selectable; it is fixed at the default setting. However, during data mode and command mode operation, the following flow control options are available.

Command	Flow Control Option
6140	Disable flow control
6141	Enable software flow control (factory default)
6142	Enable hardware flow control

Reader message:

Done

If the reader is configured for software flow control (XON/XOFF), it stops transmitting if it receives an XOFF character (command 13H). It will not resume transmitting until it receives an XON character (command 11H). If the reader is configured for hardware flow control (RTS/CTS, request to send/clear to send), it stops transmission if it detects that the CTS line is no longer asserted. It will resume transmission when this line is asserted again.

Note: *Amtech recommends that XON/XOFF flow control be disabled while using the ECP.*

6160 Disable Buffer Control Mode (Factory Default)

Command 6160 is used to disable buffer control. Buffer control is an ECP option that prevents unsolicited (asynchronous) reader transmissions. If buffer control is not active, the reader transmits data to the host as soon as the data is acquired. The host must acknowledge the data according to the ECP acknowledgment/negative acknowledgment *(ACK/NAK)* protocol. Refer to command 6161 for more information.

Reader message:

Done

6161 Enable Buffer Control Mode

Command 6161 is used to enable buffer control. Buffer control is an ECP option that prevents asynchronous reader transmissions. When buffer control is enabled using command 6161, the reader transmits only in response to command 06, transmit buffer entry. The exception to this rule occurs on startup when the reader transmits its two-line sign-on message asynchronously.

The following commands are used for buffer control:

Number	Command Description	Message
06	Transmit buffer entry	Done, error, or <message>
535	Display buffer control status where x= 0 for disabled 1 for enabled	BCM x
6160	Disable buffer control mode (default)	Done
6161	Enable buffer control mode	Done

If BCM is enabled, the host must request tag IDs and reports from the reader using the transmit buffer entry command 06. If the reader receives this command and it has data in its buffer, it will transmit the buffered message of highest priority (tag IDs first and then reports). If the reader's buffer is empty, it will transmit the *Done* message instead. The reader will return an *Error* message if it receives command 06 when BCM is not enabled.

If buffer control is enabled, the reader will not support *ECP ACK* or *NAK* messages from the host. Since all messages are transmitted in response to a host command, acknowledgment from the host is not required. Instead, the ECP sequence numbers are used to ensure data integrity. If the host receives an erroneous reader message, it should retransmit command 06, transmit buffer entry, with the same sequence number. This will cause the reader to search and replace its previous message.

If buffer control is enabled, the reader will not use the timeout to trigger re-transmission of data because in buffer control, reader data is transmitted only when requested by the host.

Reader message:

Done

Buffer Control Error Messages

The error messages shown in the following table are transmitted based on the content level of the tag buffer. These messages are transmitted in data mode and command mode. They will not be transmitted if uniqueness checking has been disabled to transmit all IDs (command 40) or buffer all IDs (command 43).

Error Message	Buffer Status
Error02	Tag buffer is full. Incoming IDs cannot be buffered. An overflow of the tag buffer can occur if SmartPass is left in command mode or if flow control has disabled transmission. A buffer overflow results in subsequent tag IDs being lost.
Error03	Tag buffer has been partially cleared and new IDs are once again being stored.
Error04	Tag buffer has filled to 75%.
Error05	Tag buffer has emptied to 50%.

If the buffer fills up and then transmission is re-enabled, the sequence of transmitted reports would be as follows:

Error 04 75% full

Error 02 100% full

Error 03 emptied to less than 100%

Error 05 emptied to 50% or less

6170 Disable Echo Mode

Command 6170 disables the reader's echo of received host commands. If operating in basic protocol or data inquiry protocol, the reader echoes by default. As the reader receives a host command, it echoes each character of the command. Once the entire command has been received and processed, the reader transmits its response. If echoing is disabled with command 6170, the reader will not echo the command but only transmits its response. The reader never echoes while in ECP or download mode operation.

Reader message:

Done

6171 Enable Echo Mode (Factory Default)

Command 6171 enables the reader to echo received host commands. Refer to command 6170 for more information.

Reader message:

Done or Error

620N Output Control

This command provides direct control of two output lines that may be used to operate external hardware, such as gates or traffic lights. Receipt of any 620N command automatically disables predefined output mode command 621. The value for N specifies the output status requested as follows:

Command	Output Control Option
6200	Turn off both output ports
6201	Turn off output0 on, output1
6202	Turn off output1 on, output0
6203	Turn on both output ports

Reader message:

Done

621 Predefined Output Control (Factory Default)

Command 621 configures the reader for predefined output mode. In this mode, both output lines — output0 and output1 — are automatically asserted upon receipt of a valid unique tag ID. The output line remains asserted for the time specified by output pulse duration (command 67N). Any direct control command (620N) automatically disables the predefined output mode.

Reader message:

Done

63 Reset Reader

Command 63 resets the power fail bit, clears all buffers, resets tag uniqueness, turns off both output lines, transmits the sign-on message, and returns to the data mode.

Note: *This command does not reset any other configuration parameters.*

Reader message:

Model SP2-ACC Ver X.XXD SNYYYYYY

Copyright 1996 AMTECH Corp.

where:

X.XXD is the version number.

YYYYYY is the serial number expressed in decimal digits (0 to 9) with the first two digits representing the year.

Caution

All buffered data is lost when command 63 is executed.

640N RF Control

This command directly controls the RF module. The N value controls the RF power as follows:

Command	RF Power
6400	Turns off RF channel
6401	Turns on RF channel

Either command disables RF-by-input control command 641.

Reader message:

Done

641 Select RF-by-Input Control (Factory Default)

Command 641 configures the reader for RF-by-input control. The reader automatically turns on RF when it detects a presence through sense0. The reader turns off RF according to the selected RF control algorithm command 692N.

Reader message:

Done

642NN Select RF Operating Frequency

Caution

The authorized frequency band in the U.S. is 902 to 904 MHz and 909.75 to 921.75 MHz. Contact Amtech if your application requires a frequency outside of this range.

Command 642NN sets the reader RF frequency from 902 to 928 MHz in 500-kHz steps, where NN is a hexadecimal value from 00 to 34. After the reader's frequency is set, the value is stored in battery-backed RAM (non-volatile RAM, NVRAM). This value is NOT altered by power-down, loading default parameters, or a flash download

of new software (there is no default frequency value). It can only be changed by issuing command 642NN.

Additionally, if the NVRAM becomes corrupted, the correct operating frequency cannot be guaranteed. In this circumstance, the RF section will shut down and the reader will send an error message to the host (error 06). Until the frequency is reset using command 642NN after NVRAM corruption, the unit will display the same error message every time it is powered up or if an attempt is made to enable the RF (by host or by external sensor).

The commands to set the RF frequency are listed in.

Table 7-1 RF Frequency Commands

Command	RF Frequency (MHz)	Approved for Use in the U.S.
64200	902	Yes
64201	902.5	Yes
64202	903	Yes
64203	903.5	Yes
64204	904	Yes
64205	904.5	No
64206	905	No
64207	905.5	No
64208	906	No
62409	906.5	No
6420A	907	No
6420B	907.5	No
6420C	908	No
6420D	908.5	No
6420E	909	No
6420F	909.5	No
64210	910	Yes
64211	910.5	Yes
64212	911	Yes
64213	911.5	Yes

Table 7-1 RF Frequency Commands

Command	RF Frequency (MHz)	Approved for Use in the U.S.
64214	912	Yes
64215	912.5	Yes
64216	913	Yes
64217	913.5	Yes
64218	914	Yes
64219	914.5	Yes
6421A	915 (factory default)	Yes
6421B	915.5	Yes
6421C	916	Yes
6421D	916.5	Yes
6421E	917	Yes
6421F	917.5	Yes
64220	918	Yes
64221	918.5	Yes
64222	919	Yes
64223	919.5	Yes
64224	920	Yes
64225	920.5	Yes
64226	921	Yes
64227	921.5	Yes
64228	922	No
64229	922.5	No
6422A	923	No
6422B	923.5	No
6422C	924	No
6422D	924.5	No
6422E	925	No

Table 7-1 RF Frequency Commands

Command	RF Frequency (MHz)	Approved for Use in the U.S.
6422F	925.5	No
64230	926	No
64231	926.5	No
64232	927	No
64233	927.5	No
64234	928	No

Reader message:

Done

643NN Select RF Operating Range (Distance)

Command 643NN selects the read range where NN is a hexadecimal value from 00 to 1F; the range increases with increasing NN value. The RF output range can be adjusted for 32 discrete values, shown in the following list:

00	08	10	18
01	09	11	19
02	0A	12	1A
03	0B	13	1B
04	0C	14	1C
05	0D	15	1D
06	0E	16	1E
07	0F	17	1F

where 00 is the shortest range and 1F is the longest range. The default range value is 1F.

Reader message:

Done

65 Reset Power Fail Bit

Command 65 resets the power fail bit to 0. The bit changes from 0 to 1 when power is restored to the reader. Upon reader power-up, the host transmits either command 65 or the reset reader command 63 to properly initialize this bit. The current state of the power fail bit may be displayed. Refer to "520 Display Power Fail Bit" on page 7-15 for more information.

Reader message:

Done

660 Test External RAM

Command 660 performs a read/write test of external data memory (32 K). The contents of RAM are not disturbed by this test. Command 660 updates information displayed by the display diagnostic results command 661.

Reader message:

Done	passed RAM test
Error	failed RAM test

661 Display Diagnostic Results

Command 661 displays the results of previously performed diagnostics. The information displayed by this command is updated when the reader receives any diagnostic command. This information is preserved after power-down. Executing command 669 updates every field in this message. If diagnostics have never been performed, the information displayed by this command is not predictable.

Reader message:

DIAG R<0 to 1> E<0 to 1> D<0 to 1> C<0 to 1>

where:

R0	boot ROM OK
R1	boot failed
E0	flash memory OK
E1	flash memory failed
D0	external RAM OK
D1	external RAM failed
C0	RTC OK
C1	RTC failed

664 Test Real-Time Clock

Command 664 tests the real-time clock (RTC). The reader tests the RTC by retrieving both the date and time and verifying their validity. This command updates information displayed by the display diagnostic results command 661.

Reader message:

Done	real-time clock OK
Error	real-time clock failed

667 Verify Boot ROM Checksum

Command 667 calculates and verifies the boot ROM checksum. This command updates information displayed by the display diagnostic results command 661.

Reader message:

Done boot ROM OK

Error boot ROM failed

668 Verify Flash Memory Checksum

Command 668 calculates and verifies the flash memory checksum. This command updates information displayed by the display diagnostic results command 661.

Reader message:

Done flash memory OK

Error flash memory failed

669 Perform All Diagnostics

Command 669 performs a test on each of the following items:

- External RAM
- Boot ROM
- Flash memory
- Real-time clock

This command also initiates a system check tag operation. This command updates information displayed by the display diagnostic results command 661.

Reader message:

Done all tests OK

Error one or more failures

Use command 661 to display the diagnostic results.

66F Load Default Operating Parameters

Command 66F loads all the factory default operating parameters. Refer to Table 4-7 on page 4-13 for a listing of the defaults.

Reader message:

Done all parameters loaded OK

Error a parameter load failed

67N Set Output Pulse Duration

Command 67N sets the output pulse duration for the predefined output mode command 621. This command specifies the length of time that output lines(s) will be asserted upon receipt of a valid and unique tag ID. The factory default setting is 228

ms. The variable *N* specifies an output pulse duration of from 4 ms to 752 ms. Actual pulse length output of the reader may vary from the specified value by up to 4 ms.

Uppercase or lowercase characters are allowed for NN; for example, hex digits A–F or a–f. Table 7-2 indicates the hex command for the output pulse durations.

Table 7-2 Output Pulse Duration Hex Commands

Command	Delay (ms)
670	4
671	8
672	12
673	16
674	20
675	24
676	32
677	40
678	48
679	60
67A	76
67B	152
67C	228 (factory default)
67D	300
67E	376
67F	752

For example, command 67F specifies an output pulse duration of 752 ms.

Additional IDs may be acquired during the selected output pulse duration; however, the timing restarts upon each successive ID acquisition. This command should be used with discretion. For example, when the tag acquisition interval is short compared to the selected pulse duration, distinct pulses may not be generated.

Reader message:

Done or Error

690N Select Presence Without Tag Report Option

This command selects the presence without the tag reporting option. If enabled using command 6901, input reports are transmitted when a presence is detected without the

subsequent acquisition of a valid tag. The values for N specify the reports as indicated in Table 7-3.

Table 7-3 Tag Reporting Option Commands

Command	Report Option
6900	Disable presence without tag reports (factory default)
6901	Enable presence without tag reports

Reader message:

Done

Refer to "Basic and ECP Protocol Format" on page 6-5 for message format information.

692N Select RF Control Algorithm

This command selects the algorithm for turning off RF power when RF-by-input control is enabled using command 641.

The values for N specify the following RF control algorithms, as indicated in Table 7-4.

Table 7-4 RF Control Algorithm Commands

Command	RF Power Off
6920	On timeout only
6921	Timeout or tag ID acquired
6922	Timeout or presence false (factory default)

Command 6920 turns off RF power based on the timeout established by command 693N.

Command 6921 allows RF power to be turned off either after the timeout period or upon acquisition of a valid tag ID, whichever occurs first.

Command 6922 turns off RF power either after the timeout period or upon the presence false condition, whichever occurs first.

Reader message:

Done

693N Select RF Timeout Period

Command 693N selects the RF timeout period used by RF control algorithm command 692N. Values for N range from 0 to E.

Command 693F disables the RF timeout. The reader turns off the RF immediately following the acquisition of a valid tag, whether or not it is unique. This control algorithm may be used in Wiegand mode to ensure that the tag data is transmitted once and only once per presence on both serial and Wiegand ports.

Uppercase or lowercase characters are allowed for NN; for example, hex digits A–F or a–f indicates the hex commands for the RF timeout periods.

Table 7-5 RF Timeout Period Commands

Command	Timeout (ms)
6930	0 (always expired)
6931	4
6932	8
6933	12
6934	20
6935	24
6936	32
6937	48
6938	60
6939	92
693A	152
693B	300
693C	452
693D	600
693E	752
693F	Infinite (never expires, factory default)

The reader returns an *Error* message if a valid hexadecimal digit is not substituted for N in command 693N.

Reader message:

Done or Error

694N Select Input Inversion Option

Command 694N enables or disables input inversion. When inversion is enabled, an open circuit input is interpreted as a closed circuit, and a closed circuit input is interpreted as an open circuit. This feature allows greater flexibility in the attachment of external equipment to the reader inputs. For example, some proximity sensors indicate presence with an open circuit. In this instance, command 6941 can enable input inversion so that an open circuit input indicates a presence. The values for N represent the two inversion options. Table 7-6 presents the hex commands.

Table 7-6 Input Inversion Enable/Disable Commands

Command	Option
6940	Disable input inversion (factory default)
6941	Enable input inversion

Reader message:

Done

695 Set Serial Number

Command 695 assigns the reader serial number according to the format:

695SSSSSS

where:

SSSSSS is the serial number.

The serial number may contain as many as six uppercase or lowercase ASCII alphanumeric characters. Once assigned, the serial number is preserved during power-down and the loading of default parameters.

Reader message:

Done

696S…S Store Hardware Configuration String

Command 696S...S stores hardware configuration information into reader memory.

Note: *Once assigned, configuration information is preserved during power-down and the loading of default parameters.*

The hardware configuration string is assigned according to the following format:

696S...S

where:

S...S is the hardware configuration string that may contain as many as 20 uppercase or lowercase ASCII alphanumeric characters.

Reader message:

Done

Auxiliary Reader Control — Command Group 8

Group 8 commands provide control of reader functions such as the system check tag and sense input lines.

810 Disable Periodic Check Tag (Factory Default)

Command 810 disables the periodic operation of the system check tag.

Reader message:

Done

8110 Perform System Check Tag Test

Command 8110 performs a single system check tag test. It may be executed either in data mode or command mode. Internal check tag circuitry emits a single ID that will be acquired and stored by the reader in the normal manner. If a real tag is in the field at the time, the check tag operation is aborted.

Command 8110 disables the periodic check tag function, which is enabled by command 8120.

Reader message:

Done

8120 Enable Periodic Check Tag

Command 8120 enables the periodic operation of the system check tag. The reader performs a system check tag test every 30 minutes. These tests continue until either the disable periodic check tag command 810 or the perform system check tag test command 8110 is received.

Reader message:

Done

8160 Select Internal Check Tag (Factory Default)

Command 8160 selects the internal check tag option. Upon receiving command 8110 or 8120, the reader begins a check tag operation using internal check tag circuitry. This circuitry emits a single ID (system check tag) that is acquired and stored in the normal manner.

Reader message:

Done

82N Select Input Status Change Report Option

Command 82N selects the input lines to be monitored to report any change in input status. The enabled input lines are monitored for any changes in their logic states. If a change is detected, the reader generates an input status change message and treats it as a tag ID. If the auxiliary information option is enabled, the input status field displays the current input values. The values for N specify the report options as indicated in Table 7-7.

Table 7-7 Report Option Commands

Command	Report Option
820	Disable status change reports (factory default)
821	Report change on input0
822	Report change on input1
823	Report changes on input0 and input1

Reader message:

Done

Flash Memory Control — Command Group 9

Group 9 commands enables testing, erasing, and updating flash memory with new software versions.

90 Load Program Block

Command 90 transfers one Intel hex data record from an external host to the reader flash memory. This command loads an entire program file into reader memory, one block at a time. The flash memory must have been previously erased using command 96.

The reader must be operating in download mode (command 05) before it will accept the load program block command (command 90). Refer to "Program Download" on page 5-5 for download information and the download procedure.

Reader message:

Done	Intel hex record has been received, stored, and verified with no errors detected.
Read Error	Error occurred during the transfer of the record.
Program Error	Error occurred during the programming of the flash memory.
Verify Error	Error occurred during the verification of the programmed data.

91 Verify Flash Checksum

Command 91 calculates a checksum on the flash memory and then compares it against the stored checksum.

Reader message:

Done	flash checksum verified
Error	flash checksum failed

96 Erase Flash Memory

Command 96 erases the flash memory. Once this command is executed, exit from download mode is not possible until a new program is loaded into flash memory.

Reader message:

Done

97 Perform Destructive Flash Test

Command 97 performs a test on the flash memory. Various patterns are programmed into the memory and verified. This test writes over any program previously stored in the flash memory; therefore, a download of software is required afterwards. Once this command is executed, exit from download mode is not possible until a new program is loaded into flash memory.

Reader message:

Done	flash memory OK
Error	flash memory failed

99 Exit Download Mode

Command 99 instructs the reader to exit download mode. The reader will re-execute startup to ensure proper initialization of the reader. If the flash memory checksum verifies, the reader displays the sign-on message shown below and enters data mode.

Reader message:

Model SP2-ACC Ver X.XXD SNYYYYYY
Copyright 1996 AMTECH Corp.

where:

X.XXD	is the version number.
YYYYYY	is the serial number expressed in decimal digits (0 to 9) with the first two digits representing the year.

If the flash checksum is not verified, the reader comes up in download mode and transmits the sign-on message shown above.

8

Installing SmartPass

This chapter lists the materials needed and procedures to install and fine-tune SmartPass.

Installation Process

After you have developed the site plan, identified the location to install SmartPass, and tested SmartPass, you are ready to install SmartPass. Installation involves the following tasks:

- Mounting SmartPass on a pole, ceiling, or wall
- Connecting SmartPass power
- Setting the read zone
- Connecting SmartPass host and sense input/sense output communications

Installation Accessory Kits

Table 8-1 lists optional Amtech SmartPass installation accessory kits that might be useful:

Table 8-1 Installation Accessory Kits

Part No.	Description
54-1620-001	Wall or ceiling mount kit
58-1620-001	5-ft connector cable
58-1620-002	20-ft connector cable
20-1620-003	Connector kit only
56-1620-004	13-pair cable (1-ft lengths)
76-1620-005	110 V AC to 18 V AC Class C transformer
76-1620-006	12 V AC to 18 V AC step-up transformer

Cabling Assignments

SmartPass power, communications, and customer interface signals are supplied from SmartPass to the host through a multiwire cable (ordered as a separate accessory), which is a 13-pair pigtail. The 13-wire pigtail is a colored wire pair cable, with different colors denoting the individual pairs, only one of which is red/black. In some instances, an alternate 15-pair pigtail may be substituted. The 15-pair pigtail is a red/

black wire pair cable, with numbers on the pairs to denote the individual pairs. Two pairs of the 15-pair pigtail, numbers 14 and 15, are not used.

SmartPass wiring and cabling assignments for the colored wire pair cable are listed in Table 8-2. Refer to Appendix C for the alternate wiring assignments.

Table 8-2 Cabling Assignments for Colored Wire Pair Cable

Colored Wire Pair Cable			**Signal**	**Description**	**Typical Function**
Pair	**Pin**	**Color**			
Red/ Black	A	Black	TX232, RX422+, IF485-	RS-232 transmit, RS-422 receive positive, RS-485 negative	SmartPass output, host input
	B	Red	RX232, RX422-, IF485+	RS-232 receive, RS-422 receive negative, RS-485 positive	SmartPass input, host output
Yellow/ Red	C	Yellow	RTS232, TX422+	RS-232 request to send or RS-422 transmit positive	SmartPass output, host input for hardware handshaking
	D	Red	CTS232, TX422-	RS-232 clear to send or RS-422 transmit negative	SmartPass input, host output for hardware handshaking
Blue/ Red	E	Blue	WGND0	Wiegand data0	Parking/access control applications
	F	Red	WGND1	Wiegand data1	Parking/access control applications
Orange /Red	G	Orange	18V	Main power input	
	H	Red	18V_RTN	Main power return	
Brown/ Red	J	Brown	18V	Main power input	
	K	Red	18V_RTN	Main power return	
White/ Red	L	White	Lock	Tag lock sense output, active-closed	Testing maintenance
	M	Red	Lock_RTN	Tag lock return	Testing maintenance

Table 8-2 Cabling Assignments for Colored Wire Pair Cable

Colored Wire Pair Cable			Signal	Description	Typical Function
Pair	**Pin**	**Color**			
Green/ Red	N	Green	Sense Input0	Sense input0 (loop)	Loop and presence detect
	P	Red	Sense Input0_RTN	Sense input0 return; not isolated from signal ground	Loop and presence detect
Blue/ Black	R	Blue	Sense Input1	Sense input1	General-purpose sense input, not used to detect presence.
	S	Black	Sense Input1_RTN	Sense input1 return; not isolated from signal ground	General-purpose sense input, not used to detect presence.
Brown/ Black	T	Black	Out0_COM	Sense output0 (tag detect), common terminal	Switched sense output to control gate
	U	Brown	Out0_No	Sense output0 normally open terminal	Switched sense output to control gate
Orange /Black	V	Black	Out0_COM	Sense output0 (tag detect output), common terminal	Switched sense output for any external control (light, gate, buzzer, etc.)
	W	Orange	Out 0 Normally Closed	Sense output0 normally closed terminal	Switched sense output for any external control (light, gate, buzzer, etc.)
Green/ Black	X	Black	Out1_ COM	Sense output1, common terminal	Switched sense output.
	Y	Green	Out1_NO	Sense output1 normally open terminal	Switched sense output
White/ Black	Z	Black	Out1_ COM	Sense output1, common	Switched sense output
	a	White	Out1_NO	Sense output1 normally closed terminal	Switched sense output

Table 8-2 Cabling Assignments for Colored Wire Pair Cable

Colored Wire Pair Cable			Signal	Description	Typical Function
Pair	Pin	Color			
Yellow/ Black	b	Yellow	GND	logic ground	Signal ground (used with RS232 and Wiegand communications)
	c	Black	GND	logic ground	Signal ground (used with RS232 and Wiegand communications)

Mounting SmartPass to Round Pole or Flat Surface

This section lists materials required and procedures for mounting SmartPass on a round pole or on a ceiling, wall, or other flat surface, based on the site's requirements.

Mounting SmartPass on a Round Pole

SmartPass can be simply and inexpensively mounted on virtually any pole regardless of its diameter. Follow the instructions below for mounting SmartPass to a pole.

Materials Required

You will need the following materials to install SmartPass:

- A 5/32-in. Allen wrench to assemble and adjust the mounting brackets
- Two 1/2-in. (1.3 cm) stainless steel hose clamp straps, 12-in. (30.5 cm) length for a typical 2-in. (5 cm) diameter pole
- Two 1/2-in. (1.3 cm) stainless steel hose clamp straps, 24-in. (61 cm) length for a 10-in. (25 cm) diameter pole
- Flat-tip screwdriver or adjustable wrench to tighten hose clamp straps

Procedures

Use the following procedures to mount SmartPass to a pole.

1. Unpack SmartPass. A factory-mounted bracket (Figure 8-1) is attached to the back of SmartPass, and a pole mount bracket assembly (Figure 8-2) is bubble-wrapped with SmartPass and contains a plastic bag of screws.

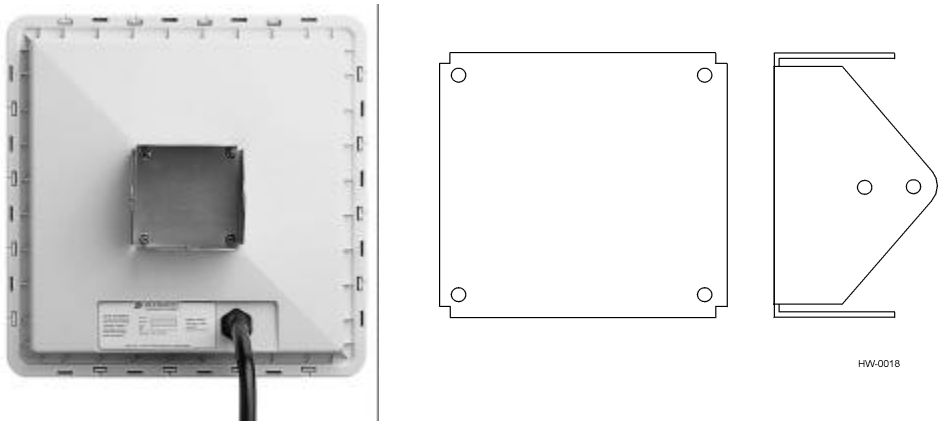

Figure 8-1 Factory-Mounted Bracket

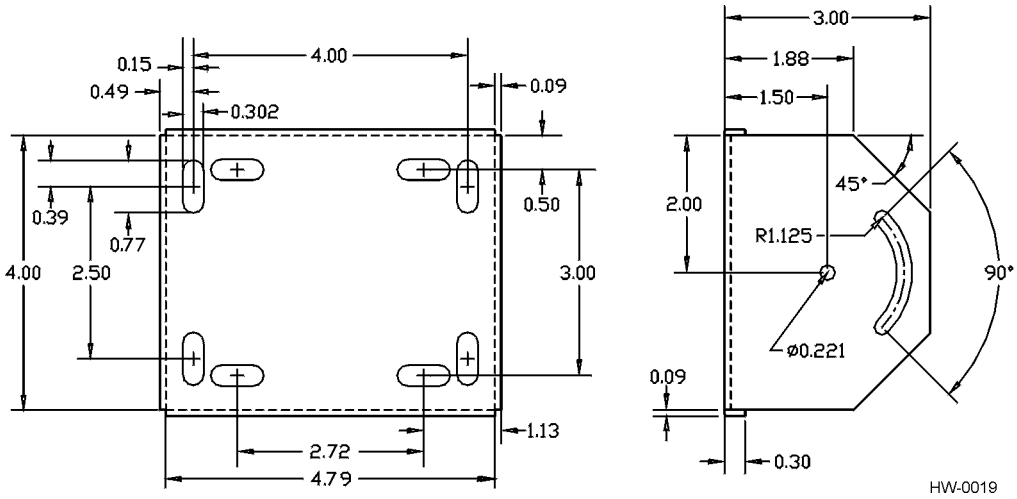

Figure 8-2 Pole Mount Bracket Assembly

2. Using the two 1/2-in. (1.3 cm) stainless steel straps, attach the pole mount bracket assembly to the pole approximately 6 to 8 ft (1.8 to 2.4 m) above the pavement surface. Tighten slightly so you can adjust SmartPass left or right, but not so slightly that it will slide down the pole.

3. Using the four machine screws and washers, attach SmartPass to the pole mount bracket (Figure 8-3). Tighten the screws slightly so that SmartPass can be adjusted up or down.

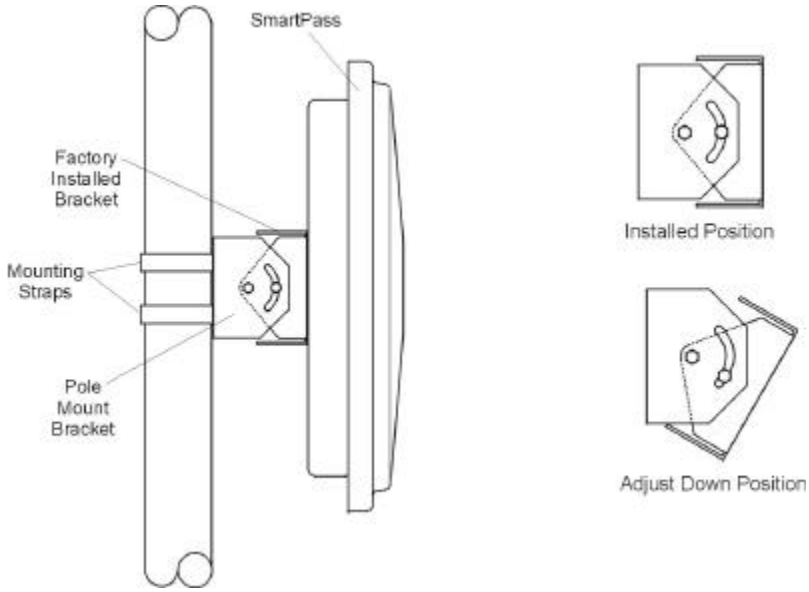

Figure 8-3 SmartPass Mounted Using Pole Mount Bracket

4. Adjust the assembly by pointing SmartPass to the middle of the area where tags will be read and tighten all screws and straps. Figure 8-4 illustrates a front and top view of a pole-mounted SmartPass. The figure shows the approximate measurements used for sites where tags would be mounted on the interior driver's side windshield

.

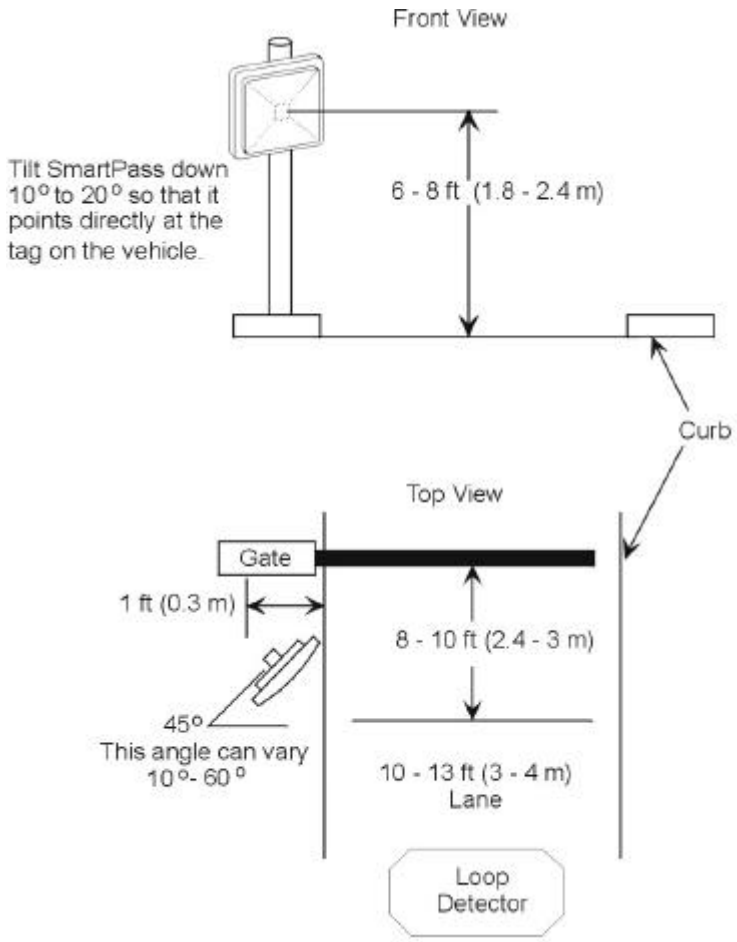

Note: *These are approximate dimensions for sites where tags will be mounted on the driver's side. Adjust SmartPass to match site and tag mounting positions to provide the most direct line of sight to the tags.*

Figure 8-4 Front and Top Views of SmartPass Position

Mounting SmartPass to a Wall or Ceiling

Because SmartPass weighs only 9 1/2 lbs (4.3 kg), 1/4-in. (0.6 cm) bolt hardware is adequate to secure the unit to a wall or ceiling.

Materials Required

You will need the following materials to install SmartPass on a wall or ceiling. Be sure to use high-quality corrosion-resistant anchor hardware.

- Anchor hardware suitable for the surface on which you will mount SmartPass
- Four hex nuts 3/8-16 threaded and four lockwashers 3/8-in. threaded

- 5/32-in. Allen wrench
- SmartPass wall mount bracket accessory kit (recommended)

The basic SmartPass is supplied with a pole mount bracket assembly (Figure 8-2) that allows you to adjust SmartPass up and down. Amtech recommends using the wall mount bracket accessory kit (Figure 8-5) to provide additional horizontal aiming flexibility when attaching SmartPass to a pole with flat sides, or to a wall or ceiling where other structures may interfere with accurately aiming SmartPass toward the tags.

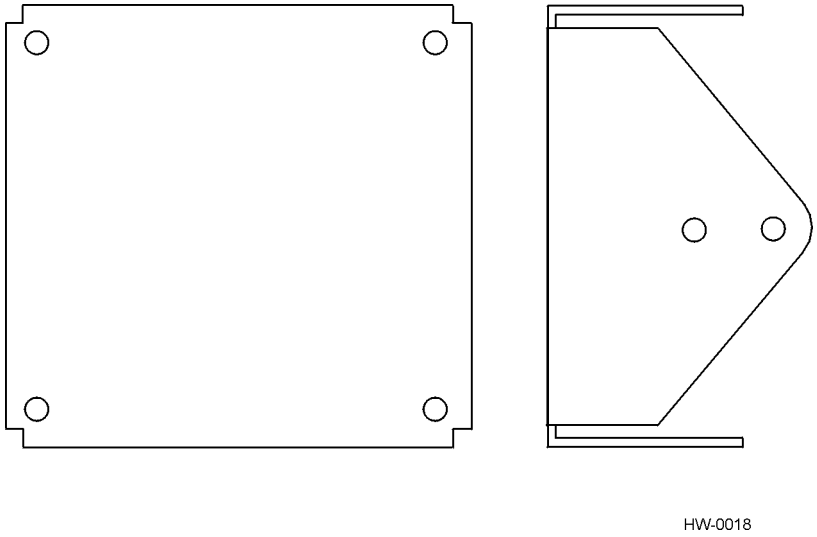

Figure 8-5 Wall Mount Bracket Accessory

Procedures

Use the following instructions to mount SmartPass to a wall or ceiling using the pole mount and wall mount bracket accessory kits.

1. Unpack SmartPass. Set aside the pole mount bracket. This bracket will be used in the steps below to provide greater adjustment for SmartPass. The pole mount bracket is wrapped separately from SmartPass and contains a plastic bag of screws.
2. Using the 5/32-in. Allen wrench, remove the factory-mounted bracket attached to the back of SmartPass. Remove all four machine screws and washers from the bracket.
3. Unpack the optional wall mount bracket accessory kit.

4. Using the screws and washers set aside in Step 2, attach the wall mount bracket to the back of SmartPass, as shown in Figure 8-6.

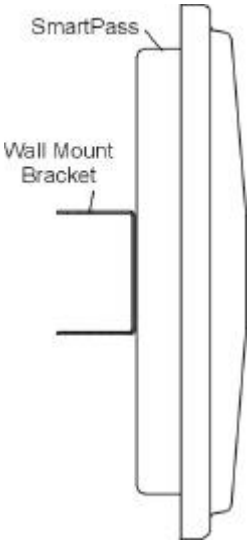

Figure 8-6 Wall Mount Bracket Attached to SmartPass

5. Tighten the screws to secure this bracket.
6. Using the four machine screws and washers, attach the factory mount bracket to the wall mount bracket, lining up the four outside screw holes (Figure 8-7).

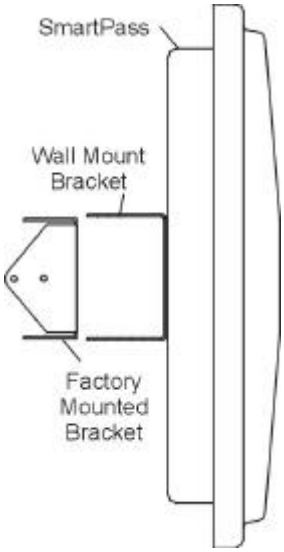

Figure 8-7 Factory Mount Bracket Attached to Wall Mount Bracket

7. Tighten lightly, since you will want to adjust later. This subassembly allows SmartPass to be aimed left or right when all three brackets are assembled.

8. Mount the pole mount bracket to the wall, ceiling, or fixture using appropriate anchors (Figure 8-8).

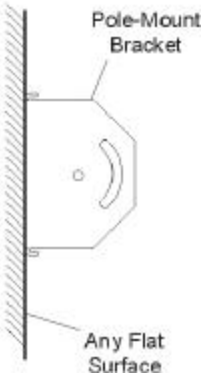

Figure 8-8 Pole Mount Bracket Attached to Wall

9. Mount SmartPass to the pole mount bracket using machine screws, as shown in Figure 8-9.

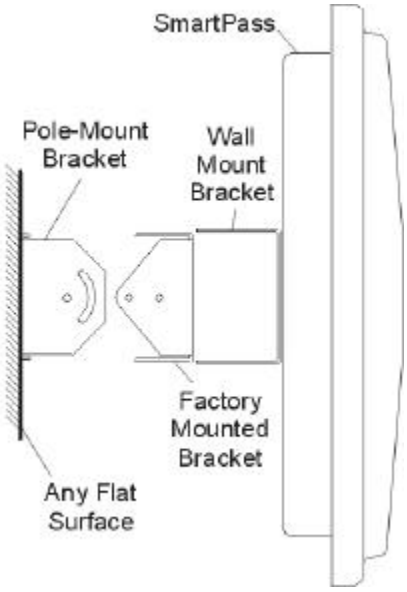

Figure 8-9 Connecting SmartPass Assembly to Pole Mount Bracket

10. Adjust and tighten machine screws in both axes to point SmartPass at the read zone.

Connecting the AC Power Supply

To connect SmartPass to a low-voltage AC power supply, perform the following steps.

1. Connect the SmartPass power wires from the cable to the transformer using the cable coding as described in Table 8-3.

Table 8-3 AC Transformer Connections for Colored Pair Wire Cable

Signal From SmartPass	Colored Pair Wire Cable Wire Pair from Color SmartPass Used		Connect to Transformer Terminal Strip
Main power input	Brown/Red and Orange/Red	Brown and Orange	L1
Main power return		Red and Red	L2

2. Complete the power connections at the power supply.

Connecting the DC Power Supply

To install SmartPass using low voltage DC connections, use the connection designations shown in Table 8-4.

Table 8-4 Low Voltage DC Cable Connections for the Colored Pair Wire Cable

Signal from SmartPass	**Colored Pair Wire Cable** **Wire Pair from Color SmartPass Used**		**Connection Use**
Main power input	Brown/Red and Orange/Red	Brown and Orange	16 to 28 V DC + terminal
Main power return		Red and Red	16 to 28 V DC – terminal

Marking the Read Zone

The antenna pattern, or read zone, of SmartPass would look roughly like a pear-shaped balloon if you were able to see it. When installing SmartPass, you will first mark the unit's read zone with the RF range set at the factory default maximum. You can then adjust the read zone using the techniques discussed in "Fine-Tuning and Verifying the Read Zone" on page 8-16.

If two SmartPass readers are installed near each other, Amtech recommends that you fine-tune each SmartPass for the ideal read zone before connecting it to permanent sense input/sense output and communications cables.

Materials Required

To mark the read zone, you will need the following items:

- SmartPass software diskette, which is supplied to Amtech dealers and distributors, or any terminal program running on a PC
- PC or laptop with 1.44 MB floppy disk drive, MS-DOS, RS–232 serial port, and a communications cable with a DB9 or DB25 connector
- Test tag, supplied by the Amtech dealer or distributor
- Communications cable to connect to the COM1 port on your PC

- Audible circuit tester and 9 V DC battery for circuit tester power as described in the section, “Testing SmartPass” on page 4-6.
- Piece of chalk or roll of tape
- Plastic or wooden yardstick
- Vinyl electrical tape or hook-and-loop material

Marking Procedures

Follow the steps below to mark the read zone:

1. Connect the red and white leads from the audible tester to the red and white pair of wires from the SmartPass cable.
2. Twist together the red and green pair of wires from the SmartPass cable to turn on continuous RF power.
3. Secure the test tag to the end of the yardstick using electrical tape or hook-and-loop material. Be sure the tag polarization matches that of the SmartPass when the yardstick is held upright.
4. Stand directly in front of and about 5 ft (1.5 m) away from SmartPass. Hold the stick so that the tag is positioned at a height and angle consistent with a tag installed on a vehicle. The test tag should cause the audible tester to sound.

Note: *If you hold the test tag in your hand, your hand will absorb the RF signal and the test results will be incorrect.*

5. Move to the left until the sound stops.
6. Mark the ground with chalk or tape at the location of the tag when the sound stopped.
7. Step backward 1 to 2 ft (0.3 to 0.6 m) and repeat Steps 5 and 6.
8. Continue moving the tag back and forth in this manner, placing marks on the ground to identify the boundary of the read zone each time the sound stops. Continue moving the tag to various locations until the read zone is fully marked.

   The marks on the ground will indicate the area, called the read zone, where SmartPass reads tags at the current RF range. Figure 8-10 is a view of an ideal read

zone within a controlled lane. The *x* marks show the outside edges of the read zone.

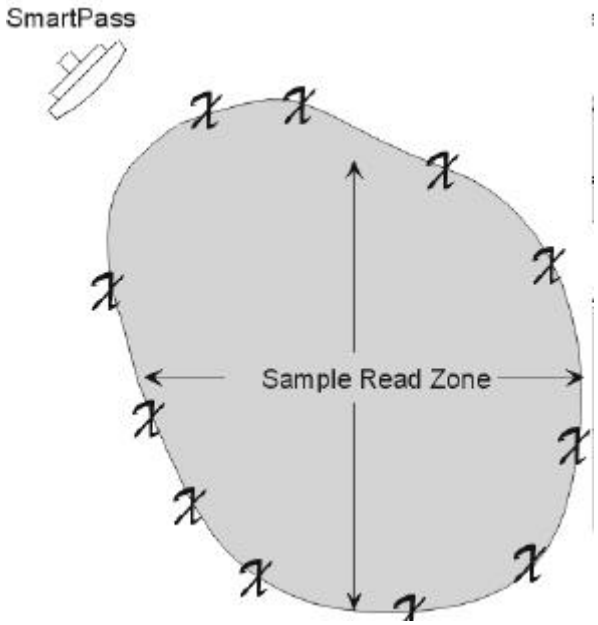

Figure 8-10 Sample Read Zone Marking Pattern

9. Standing at the farthest point of the pattern, walk toward SmartPass and listen for a continuous sound from the audible tester. If the sound is not continuous, it could indicate a weak or "patchy" RF pattern. See the section, "Fine-Tuning and Verifying the Read Zone" on page 8-16, to adjust the read zone.

Fine-Tuning and Verifying the Read Zone

If the read zone is too wide or too deep, it can be fine-tuned by changing the angle of SmartPass or by changing the RF range. Physically adjusting SmartPass and changing the RF range can confine the read zone to the area of the single lane where tagged vehicles are expected to pass. Fine-tuning the read zone also helps prevent SmartPass from reading tagged vehicles in adjacent lanes or parked behind or next to a SmartPass unit.

You can make the read zone smaller by adjusting the RF range down from the factory default (maximum range). The range can be adjusted through a host command or using SmartPass Host.

Use the following procedure to adjust the RF range using SmartPass Host, included on the software diskette supplied to dealers and distributors.

1. Connect the laptop PC to SmartPass and load SmartPass Host, as discussed in "Connecting SmartPass to the PC" on page 4-7, and "Loading and Starting SmartPass Host" on page 4-15.
2. Have another person hold the test tag at the farthest distance at which you want SmartPass to read a tag.
3. Select the `Tag & RF` drop-down menu and click on the `RF Range` command. This displays the `Range Value` dialog box, as shown in Figure 8-11.

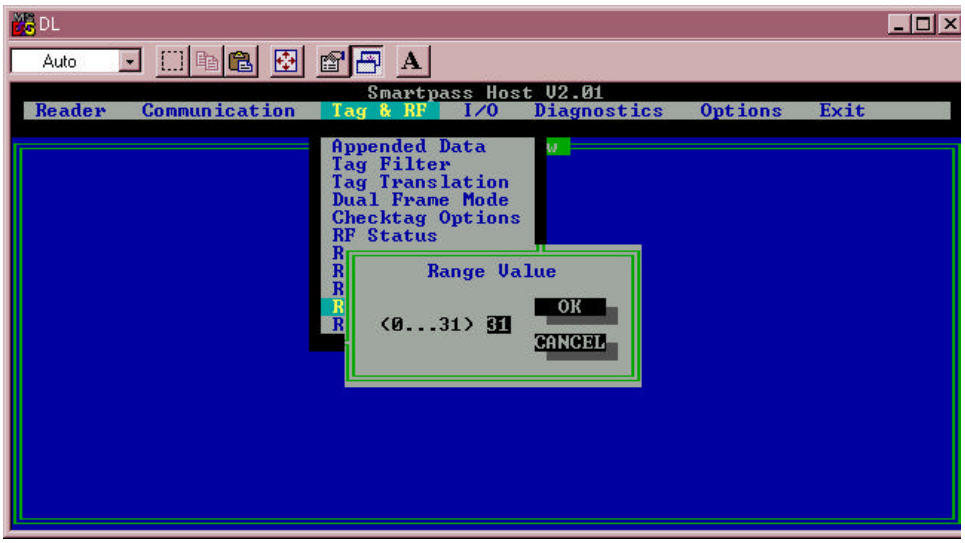

Figure 8-11 Range Value Dialog Box

4. Type in a value from 0 to 31, with 31 being the maximum (default). Smaller entries decrease the read zone size; larger entries increase the read zone size. Click on the `OK` button to make the change.
5. Follow the steps in the section, "Marking Procedures" on page 8-15, to mark the new read zone on the ground with the tape or chalk.
6. With SmartPass Host running, place one tag behind your back while you hold another tag in the read zone. If a good read is accomplished, the data from the tag held in the read zone will be displayed on the PC screen.
7. Switch tags, placing the other tag behind your back and holding the first tag in the read zone. If a good read is accomplished, the data from this tag held in the read zone will be displayed on the PC screen.
8. If both tags read successfully, you are ready to connect communications to the junction box terminal. If one or both tags did not read, follow the suggestions in the 'Verifying Tag Read Capability' section on page 4-20.

9. As a last test, attach test tags to vehicles and simulate traffic going through the read zone to verify that the system performs accurately in a live environment.

Connecting Communications

Amtech offers reader communications through RS–232, RS–422, and Wiegand interface protocols. This section provides the procedures for connecting the communications to the junction box and to the sense input and sense output circuits.

Before connecting the SmartPass communications cable to the junction box, Amtech recommends that you test and configure SmartPass hardware and software as presented in Chapter 4, “Testing and Configuring SmartPass Before Installation.” All the wiring tables are also shown in Appendix C, “Wiring Tables.”

Connecting SmartPass to the PC

SmartPass communications and customer interface signals are supplied from SmartPass to the host through a multiwire cable, which is a 13- or 15-pair pigtail. The connector for this cable is located on the back of SmartPass. Refer to the following sections to connect the appropriate wires from the communications cable to the terminal strip that is located inside the junction box.

This section contains instructions for connecting RS-232, RS-422, and Wiegand communications between SmartPass and the PC. Each section contains wiring instructions and pin assignments followed by step-by-step connection procedures. SmartPass does not need to be powered down before attaching it to the PC.

Using a RS-232 Interface

This section contains instructions for connecting SmartPass to a PC using an RS–232 interface. RS–232 interface signals are supplied by five wires from the SmartPass communications cable. The pin assignments for the signal to the host male DB9 and DB25 connectors are shown in Figure 8-12.

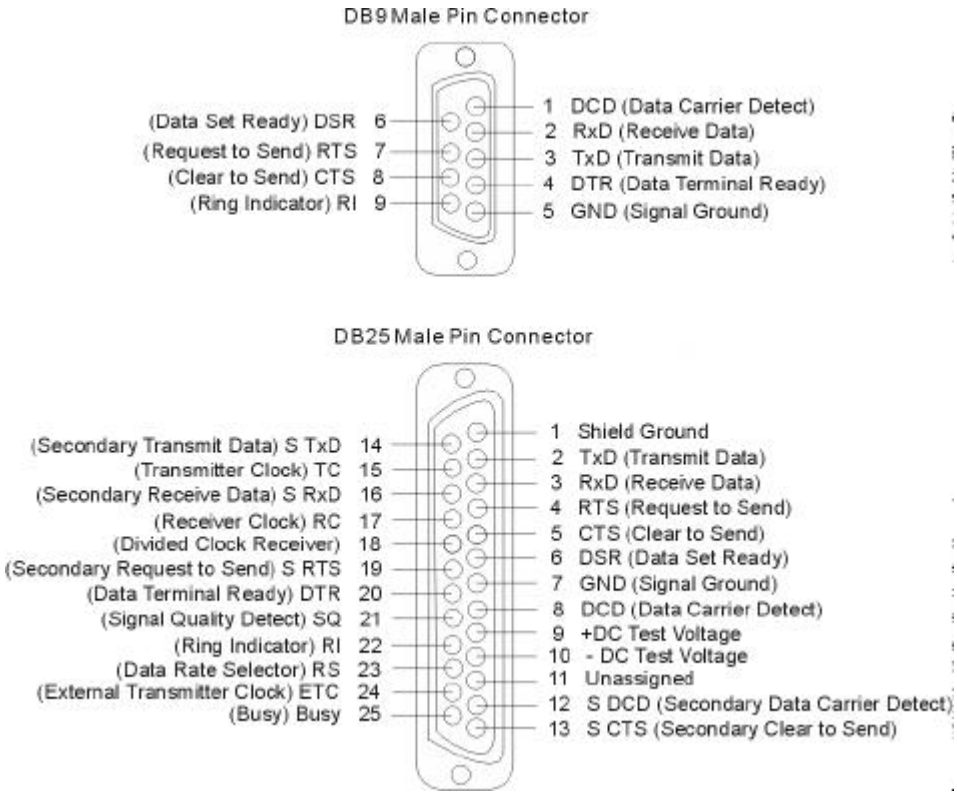

Figure 8-12 DB9 and DB25 Connector Pin Assignments for Signal to Host

Connecting Colored Wire Pair Cable

Table 8-5 shows the RS-232 colored wire assignments.

Table 8-5 RS–232 Interface Signal Wiring for Colored Wire Pair Cable

Signal from SmartPass	**Colored Pair Wire Cable** **Wire Pair from Color SmartPass Used**		**Connect Wire to Host DB9 Pin**	**Connect Wire to Host DB25 Pin**
TxD — SmartPass sense output, host sense input	Red/Black	Black	Pin 2	Pin 3
RxD — SmartPass sense input, host sense output		Red	Pin 3	Pin 2
Signal ground	Yellow/ Black	Yellow or black	Pin 5	Pin 7

Table 8-5 RS–232 Interface Signal Wiring for Colored Wire Pair Cable

Optional for hardware handshaking				
RTS — SmartPass sense output, host sense input	Yellow/Red	Yellow	Pin 8	Pin 5
CTS — SmartPass sense input, host sense output		Red	Pin 7	Pin 4

1. Connect the black wire (transmit data) from the red and black SmartPass wire pair to pin 2 of the DB9 connector or pin 3 of the DB25 connector.
2. Connect the red wire (receive data) from the red and black SmartPass wire pair to pin 3 of the DB9 connector or pin 2 of the DB25 connector.
3. Connect either the yellow or black wire (logic ground) from the yellow and black SmartPass wire pair to pin 5 of the DB9 connector or pin 7 of the DB25 connector.
4. Plug the DB9 connector or DB25 connector into the PC.

If the host is set up for hardware handshaking, use the following procedures.

1. Connect the yellow wire (RTS) from the yellow and red SmartPass wire pair to pin 8 of the DB9 connector or pin 5 of the DB25 connector.
2. Connect the red wire (CTS) from the yellow and red SmartPass wire pair to pin 7 of the DB9 connector or pin 4 of the DB25 connector.

Using RS-422 Interface

This section contains instructions for connecting SmartPass to a PC using an RS–422 interface. RS–422 interface signals are supplied by four wires from the SmartPass communications cable. Your host must have an RS–422 interface with either an internal or external converter.

Connecting Colored Wire Pair Cable

Table 8-6 lists the RS–422 signals and their interface wires.

Table 8-6 RS–422 Interface Signal Wiring for Colored Wire Pair Cable

Signal from SmartPass	Colored Pair Wire Cable Wire Pair from Color SmartPass Used		Connect to Signal from Host
RS–422 Transmit positive	Yellow/Red	Yellow	Receive (+)
RS–422 Transmit negative		Red	Receive (–)
RS–422 Receive positive	Red/Black	Black	Transmit (+)
RS–422 Receive negative		Red	Transmit (–)

To connect the interface perform the following steps.

1. Connect the yellow wire (transmit +) from the yellow and red SmartPass wire pair to the host receive (+) signal.
2. Connect the red wire (transmit –) from the yellow and red SmartPass wire pair to the host receive (–) signal.
3. Connect the black wire (receive +) from the red and black SmartPass wire pair to the host transmit (+) signal.
4. Connect the red wire (receive –) from the red and black SmartPass wire pair to the host transmit (–) signal.

Using Wiegand Interface

This section contains instructions for connecting SmartPass to a PC using a Wiegand interface. Wiegand interface signals are supplied by three wires from the SmartPass communications cable.

SmartPass with RS–232 or RS–422 comes with the Wiegand option built in. To use Wiegand, follow these steps.

1. Connect SmartPass to the PC, laptop, or terminal emulator using RS–232 connections as described in the ‘Using a RS-232 Interface’ section on 8-18 or RS–422 connections as described in the ‘Using RS-422 Interface’ section on 8-20.
2. If you are using SmartPass Host, select the **Communication** drop-down menu and click the **Wiegand Interface** option to configure SmartPass to Wiegand interface.

If you are using a terminal emulator, use command 451 to configure SmartPass to Wiegand interface.

1. Power down the PC.
2. Disconnect the connection between SmartPass and the PC, laptop, or terminal emulator.
3. Follow the directions in the "Connecting Colored Wire Pair Cable" on page 8-22 to connect the interface.

Connecting Colored Wire Pair Cable

Table 8-7 lists the Wiegand signals and the interface wires.

Table 8-7 Wiegand Interface Signal Wiring for Colored Wire Pair Cable

Signal from SmartPass	Colored Pair Wire Cable Wire Pair from Color SmartPass Used		Connect to Signal from Host
Wiegand Zero Output	Blue/Red	Blue	Data0
Wiegand One Output		Red	Data1
Signal Ground	Yellow/Black	Yellow or black	Ground

To connect the interface perform the following steps.

1. Connect the blue wire (data0) from the blue and red SmartPass wire pair to the data0 wire of your Wiegand device.
2. Connect the red wire (data1) from the blue and red SmartPass wire pair to the data1 wire of your Wiegand device.
3. Connect either the yellow or black wire from the yellow and black wire SmartPass wire pair to your Wiegand device logic ground.

Note: *The RS–232 or RS–422 interface is still included on SmartPass even when you use the Wiegand configuration. Pull the RS–232 red/black wire pairs to a convenient location and tape the ends.* ***Do not cut these wires. If you cut the wires, you may not be able to use them in the future for testing, setting frequency, or adding additional functions.***

Connecting Sense Input and Sense Output Circuits

SmartPass has two sense input circuits and three sense output circuits available. The sense input circuits can be used to notify SmartPass of external events and are designed to be connected to a free-of-voltage dry contact. Sense output circuits are single-pole, double-throw relays that provide normally closed and normally open dry contacts.

The following sections provide information to connect the sense input and sense output circuits.

Connecting Sense Input Circuits

SmartPass supports two sense inputs — sense input0 and sense input1. This requires two sense input lines for each loop sense or a total of four sense input connections. Sense input0 is the presence detection device line and is used to control RF power. Sense input0 is through the green/red wire pair on the I/O pigtail. SmartPass expects the sense input0 circuit to close when a vehicle is present (i.e., a normally open condition). The minimum presence true period is fixed at 0 ms, which indicates that no delay occurs in closing the circuit when a vehicle is present.

Sense input1 is not used directly by SmartPass. Sense input1 is under the host computer's control.

Connecting Sense Output Circuits

SmartPass supports three sets of sense output signals. Two sets (sense output0 and sense output1) provide normally open or normally closed sense outputs. The third sense output set is dedicated for testing and setup of the reader. It is defined as the TAG_LOCK signal, which indicates when a valid tag is in the read field.

These sense outputs are dry contacts that provide normally open and normally closed sense outputs. The relay contacts are rated at 30 V_{rms} or 60 V DC at 1 A, maximum.

As illustrated in Figure 8-13, sense output0, normally closed, is located on the orange/black pair. Sense output0, normally open, is located on the brown/black pair.

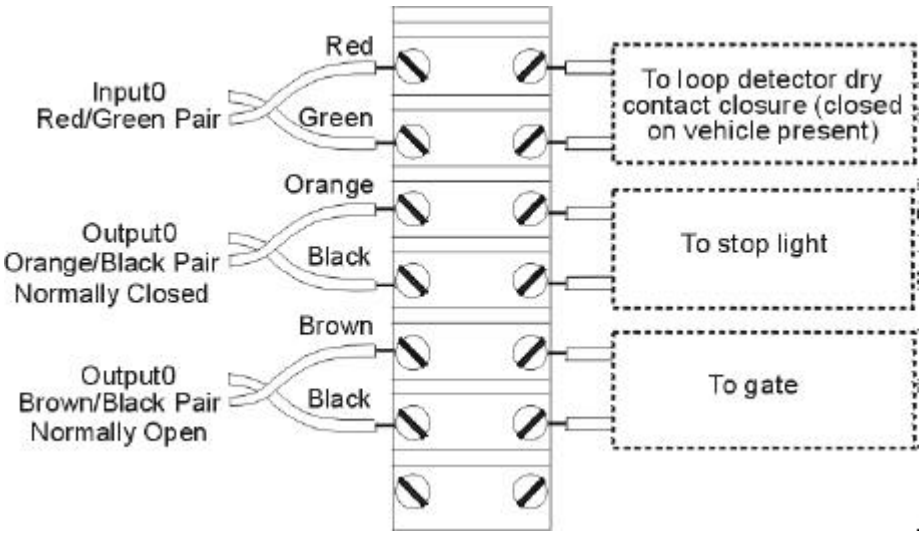

Figure 8-13 Sample Circuit Connections

In Wiegand mode operation, the sense outputs are not controlled by a predefined output mode.

Table 8-8 lists the cable descriptions and functions for the interface signals. These wire pairs can be used or terminated based on the specific project applications.

Connect the remaining wires to the appropriate terminal blocks on the terminal strip in the junction box. As a guide to the functions of each of the wire signals, use Table 8-8 if SmartPass has the colored wire pair cable.

Table 8-8 Sense Input/Output Cabling Assignments for Colored Wire Pair Cable

Pair	Pin	Color	Signal	Description	Typical Function
Blue/ Red	E	Blue	WGND0	Wiegand data0	Parking/access control applications
	F	Red	WGND1	Wiegand data1	Parking/access control applications
White/ Red	L	White	Lock	Tag lock output, active-closed	Testing maintenance
	M	Red	Lock_RTN	Tag lock return	Testing maintenance
Green/ Red	N	Green	Sense Input0	Sense Input0 (loop)	Loop and presence detect
	P	Red	Sense Input0_RTN	Sense Input0 return; not isolated from signal ground	Loop and presence detect
Blue/ Black	R	Blue	Sense Input1	Sense Input1	General-purpose sense input, not used to detect presence.
	S	Black	Sense Input1_RTN	Sense Input1 return; not isolated from signal ground	General-purpose sense input, not used to detect presence.
Brown/ Black	T	Black	Out0_COM	Sense Output0 (tag detect), common terminal	Switched output to control gate
	U	Brown	Out0_No	Sense Output0 normally open terminal	Switched output to control gate
Orang e/Black	V	Black	Out0_COM	Sense Output0 (tag detect output), common terminal	Switched sense output for any external control (light, gate, buzzer, etc.)

Table 8-8 Sense Input/Output Cabling Assignments for Colored Wire Pair Cable

Pair	Pin	Color	Signal	Description	Typical Function
	W	Orange	Out 0 Normally Closed	Sense Output0 normally closed terminal	Switched sense output for any external control (light, gate, buzzer, etc.)
Green/ Black	X	Black	Out1_ COM	Sense Output1, common terminal	Switched sense output
	Y	Green	Out1_NO	Sense Output1 normally open terminal	Switched sense output
White/ Black	Z	Black	Out1_ COM	Sense Output1, common	Switched sense output
	a	White	Out1_NO	Sense Output1 normally closed terminal	Switched sense output
Yellow/ Black	b	Yellow	GND	logic ground	Signal ground (used with RS232 and Wiegand
	c	Black	GND	logic ground	Signal ground (used with RS232 and Wiegand

CAUTION

Caution

After connecting the wires in the communications cable, ground all drain wires from the communications cable to the chassis ground in the NEMA enclosure.

9

Troubleshooting and Maintenance

This chapter includes information for troubleshooting SmartPass and performing minimal maintenance checks. It also includes information for returning products for repair, obtaining support, and a contact for providing feedback and suggestions to Amtech.

Error Messages

SmartPass transmits an error message if a command received from the host is not a recognized command, or if information supplied with the command is not correct. The reader sends this message to diagnostic commands if the reader fails the specified test.

Table 9-1 contains a list of error messages. Messages *Error02* through *Error05* are transmitted based on the content level of the tag buffer. They will not be transmitted if uniqueness checking has been disabled to transmit all IDs ("40 Transmit All ID Codes" on page 7-11) or buffer all IDs ("43 Buffer All ID Codes" on page 7-12). For a detailed explanation of buffer control and its associated error messages, refer to "6161 Enable Buffer Control Mode" on page 7-28.

Table 9-1 Error Messages

Error Message	Description	Corrective Action
Error02	Tag buffer is full. Incoming IDs cannot be buffered. An overflow of the tag buffer can occur if SmartPass remains in command mode or if flow control has disabled transmission. A buffer overflow results in subsequent tag IDs being lost.	Put SmartPass in data mode and/or reset flow control to XON. Ensure command 43 (Buffer all IDs) is not enabled.
Error03	Tag buffer has been partially cleared, and new IDs are once again being stored. *Error03* will only be issued if *Error02* has been issued first.	No action necessary; the previous error has been corrected. However, a significant number of tag IDs still remain in the buffer, so continue to monitor the status for a while to ensure the problem does not return.
Error04	Tag buffer has filled to 75%.	If SmartPass is in command mode, switch to data mode as soon as possible or risk losing some tag IDs. If flow control has disabled transmission (XOFF), reset to XON.
Error05	Tag buffer has emptied to 50%. *Error05* will only be issued if *Error04* has been issued first.	No action necessary; the previous error has been corrected. However, a significant number of tag IDs still remain in the buffer, so continue to monitor the status for a while to ensure the problem does not return.

Table 9-1 Error Messages (Continued)

Error Message	Description	Corrective Action
Error06	NVRAM parameters have been lost. SmartPass will not function properly because the RF section is shut off until the frequency is reset using command 642.	Reset the frequency using command 642.
Error07	The RF PLL has lost lock and is unable to operate at its intended frequency. RF output is disabled while SmartPass attempts to reset the PLL.	Reset the RF frequency. Refer to "Radio Frequency" on page 4-27 for instructions.
Error08	The RF PLL has successfully regained lock and has been reset to its proper operating frequency. The RF section is returned to its state prior to losing lock (enabled/disabled). *Error08* will only be issued if *Error07* has been issued first.	No action necessary; the previous error has been corrected.
Error09	SmartPass software has detected an old or unsupported version of SmartPass hardware and will not function. SmartPass is immediately placed into download mode after issuing this message. This error can only occur on system power-up or reset.	Obtain a copy of the correct version of SmartPass software from Amtech and download it to SmartPass.

Troubleshooting

The following table can be used for troubleshooting. Should problems continue after referring to Table 9-2, consult your *SmartPass Dealer's Guide* for return and replacement procedures.

Table 9-2 Symptoms and Remedies

Symptom Number*	Symptom	Remedy
1	When performing a quick test of SmartPass, the buzz box does not buzz.	Check all your wiring connections, and check that your buzz box is functioning. The wires from SmartPass are grouped in pairs. You could find more than one red wire, more than one black wire, and so on. You must connect the correct red and white wire pair to the leads from the battery. Verify that the red/green wire pair is still twisted together as described in Chapter 4. Twisting the red/green wire pair turns on a continuous RF signal.
2	The baud rate is selected automatically from the DEMO menu on the SmartPass software diskette, but nothing happens.	SmartPass is not communicating with your PC. Check the power supply to your PC, and check the connections between the PC and SmartPass. Try reversing the receive and transmit connections. Verify that the red/green wire pair is still twisted together.
3	When testing SmartPass, all the wires are connected correctly, but the unit does not respond.	SmartPass may not have the software loaded inside the unit. Obtain the SmartPass software diskette from your dealer and using your PC, load the software into the system. If you are using a terminal emulation program, check that the terminal emulation setting on SmartPass is VT100. Check that the SmartPass communication cable is connected to the correct COM port.
4	Strange signal responses come from SmartPass when tested with the PC.	Check the system defaults using the SmartPass software diskette that is supplied to the dealer or distributor. Your system should be set to 9600 baud, 8 bits, 1 stop bit, and no parity.
5	When a tag is moved in front of the reader, a clicking sound comes from SmartPass.	SmartPass works! You hear the relay inside SmartPass that is controlled by a lock signal. The relay is actuated when a tag is in the read zone.
6	Nothing happens when the test tag is passed in front of SmartPass.	Ensure that the red/green pair of wires is twisted together to turn on the RF power continuously. Ensure that SmartPass is powered on and is in predefined output mode.

Table 9-2 Symptoms and Remedies

Symptom Number*	Symptom	Remedy
7	SmartPass came from another site and does not work the way the factory defaults indicate that it should.	Different commands were probably used to support the other site's specific configuration. You can restore the defaults by first disconnecting the power. Next, twist the red/black pair of wires together and power up the SmartPass for 3 or 4 seconds. The factory defaults will be restored.
8	When connected to a PC that is running terminal communications software, a just-powered up SmartPass displays one of the following messages: #Model SP-ACC Ver 2.00D SNYYYYYY #[Copyright notice]	SmartPass works! The software is now loaded. YYYYYY is the Amtech-assigned serial number for this SmartPass. However, if YYYYYY = 000000, the internal battery has failed, or a serial number has never been assigned. If the internal battery has failed, the SmartPass must be returned to the factory for replacement. If a serial number has not been assigned to SmartPass, you can assign a unique serial number by using command 695. Note that each SmartPass unit must have its own unique serial number.
9	The read zone is too small, even before the range control has been adjusted.	If another SmartPass is in the same area, be sure it operates on another frequency that is at least 6 MHz different. Check for possible interference from another nearby RF source: fluorescent lights, neon signs, high voltage power lines, nearby cellular telephone, or radio stations. Lights will need to be removed or shielded. Point SmartPass in a different direction to see if interference comes from only one direction. You may require a different SmartPass that uses another frequency. Verify that the range adjustment is set to the maximum.
10	The perimeter of the read zone has been defined, but there is a "hollow" spot in the center of the zone that does not read tags.	The angle of SmartPass may need adjustment. Slightly tilt SmartPass to a different angle to change either the length or width of the read zone. Check the range control adjustment. See "Radio Frequency" on page 4-27.
11	SmartPass is reading tags out of the desired read zone, or cross-lane reads are occurring.	Some interference from other RF or electrical sources may be occurring. See "Reflection, Refraction, and Diffraction of RF Signals" on page 2-12.
12	How do I download the SmartPass software diskette?	To download SmartPass software, you will need a SmartPass software diskette with READ.ME, DL.EXE, and the software file. Insert the demonstration diskette into your PC, and print the instructions on the READ.ME file.
13	SmartPass is not providing any output to the Wiegand interface.	Ensure SmartPass is in Wiegand mode. The default is either RS-232 or RS-422 mode; refer to "Using Wiegand Interface" on page 4-10.

*Use this number to reference the problem you are having with SmartPass if you call Technical Support.

Product Repair and Returns

SmartPass is designed for whole-unit replacement and is manufactured with surface-mounted components. It requires sophisticated testing and repair equipment. All testing and repairs are performed at Amtech's factory.

Technical Support

Amtech Systems Division authorized dealers and distributors are responsible for the direct support of all customers. Authorized dealers and distributors needing support can call (972) 733-6600 and ask for the Amtech Response Center (ARC), 9:00 a.m. to 5:00 p.m. Central time, Monday through Friday. Send faxes to (972) 733-6695 ATTN: ARC. Please be prepared to answer a series of questions that are designed to direct you to the best Amtech support resource available. These questions will relate to symptoms, configuration, model, and tags used.

Note: *End users and facility operators calling the ARC will be referred to the dealer responsible for the system sale.*

Marketing Support

Dealers requiring marketing support may call SmartPass Marketing at 1-972-733-6600, 9:00 a.m. to 5:00 p.m. Central time, Monday through Friday. Send faxes to (972) 733-6699 ATTN: SmartPass Marketing. For marketing support during other hours, please call the ARC at (972) 733-6600.

Find Something Wrong or Want to Suggest an Improvement?

Call 1-800-755-0378, 9:00 a.m. to 5:00 p.m. Central time, Monday through Friday, and ask for the SmartPass product manager. Send faxes to (972) 733-6699 ATTN: SmartPass Product Manager.

A

Glossary

A

AAR Association of American Railroads

AC alternating current

ACK acknowledge (data valid)

antenna passive device that converts RF energy into magnetic energy (RF signal)

ARC Amtech Response Center

ASCII American Standard Code for Information Interchange

ASIC application-specific integrated circuit

ATA American Trucking Associations

aux auxiliary

B

backscatter portion of an RF signal that is modulated by a tag and radiated back to the reader

baud measure of number of bits per second of a digital signal; for example, 9600 baud = 9600 bits per second

BCKS boot checksum

BCM buffer control mode

BIT built-in test

bps bits per second

byte a binary character; for example, one 8-bit ASCII character

C

CCITT Consultive Committee on International Telegraphy and Telephony

check tag tag mounted inside SmartPass assembly or in an external antenna that is used to check operation of SmartPass.

cmd command

CTRL	control
comm	communications
command	data set that is recognized by the receiving device as intending to elicit a specific response
conduit	flexible steel pipe use for electrical wiring
cps	characters per second
CR	carriage return
CRC	cyclic redundancy check
CTS	clear to send

D

data	information that is processed by a computing device
DC	direct current
DIAG	diagnostic

E

ECP	error correcting protocol
ECPS	error correcting protocol status
eol	end of line
eom	end of message
EPROM	erasable programmable read-only memory

F

field	physical area/space in which a tag can be read by the reader; also, an element of a data record/frame. For example, division within a tag's data frame.
frames	consecutive bits of data in memory that are read and written as a group
frequency bands	a range of RF frequencies assigned for transmission by an RF device

H

hex hexadecimal

hexadecimal base 16 numbering system that uses the characters 0–9 and A–F to resent the digits 0–16

host device, generally a computer, that is connected to SmartPass through the communications port

I

I/O or IO circuits input/output circuits

ID identification; encoded information unique to a particular tag

interface connection point for communication with another device

IOST I/O status

ISO International Organization for Standardization

L

LF line feed

M

m meter

MHz megahertz

mode method of operation

ms milliseconds

N

NAK negative acknowledgment (data not valid)

P

passback	used to refer to a tag ID that is not passed on to the tag buffer
PC	personal computer
PCKS	EPROM flash checksum
protocol	specified convention for the format of data messages communicated between devices
PRST	presence status
PWRB	power fail bit

R

RAM	random access memory
RDID	reader ID
read	process of acquiring data from a device; for example, from a tag or from computer memory
reader	controlled interrogating device capable of acquiring data from a device; for example, acquiring and interrupting data from a tag
read zone	the physical area in which a tag can be read by the SmartPass system
RF	radio frequency
RFST	RF status
RFID	radio frequency identification
RMA	return material authorization
ROM	read-only memory
RTC	real-time clock
RTS	request-to-send

S

SCTS	status of check tag status
SSTC	input status change reporting options
som	start of message

SN serial number

T

tag small self-contained device acting as an identifying transponder

Tau timeout delay

TT tag translation

V

V volts

Ver version (software)

W

write process of recording data; for example, writing to computer memory or to a tag's memory. Writing writes over (erases) previous data stored at the specified memory locations.

WTI Wiegand retransmit interval

B

Technical Specifications

Reader Specifications

Communications

Frequency Selection	902 to 904 and 909.75 to 921.75 MHz[a]
Reading Range	Optimal: 12 ft. (3.66 m) Maximum: 60 ft. (18.29 m)[b]

a. Operation in the United States is regulated by the Federal Communications Commission (FCC). Local regulations apply. The user is required to obtain a license issued by the FCC. Contact Amtech for more information.
b. Depending on system configuration and operating environment.

Hardware Features

Integrated System	RF module, tag decoder, antenna, and power supply all housed in a single package.
Case	Weatherproof enclosure. The system is sealed in a tamper-proof, polycarbonate housing.

Power Requirements

Input Power	16 to 20 V AC, 47 to 63 Hz or 16 to 28 V DC

Physical Attributes

Size	15.5 x 15.5 x 3.25 in (39.4 x 39.4 x 8.25 cm)
Weight	9.5 lb (4.3 kg)

Environmental Parameters

Operating Temperature	-40°F to +122°F (-40°C to +50°C)
Humidity	90% noncondensing
Vibration Tolerance	0.5 G_{rms}, 10 to 500 Hz

Options

Communications Interface	RS-232 and Wiegand or RS-422 and Wiegand
Input Power	16 to 20 V AC, 47 to 63 Hz or 16 to 28 V DC
RF Power	High RF power: 2000 mW or low RF power: 500 mW
Tag Options	Can be selected to work with full-frame (128 bits) and half-frame (64 bits) tags

C

Wiring Tables

The following tables show the wiring connections used to install and test SmartPass. For information on testing SmartPass, refer to Chapter 4. For information on installing SmartPass, refer to Chapter 8.

Communications Interfaces

Table C-1 Communications Interfaces and Conductors

Interface	Number of Conductors
RS–232	3
RS–232 with RTS and CTS hardware handshake signals	5
RS–422	4
Wiegand	3

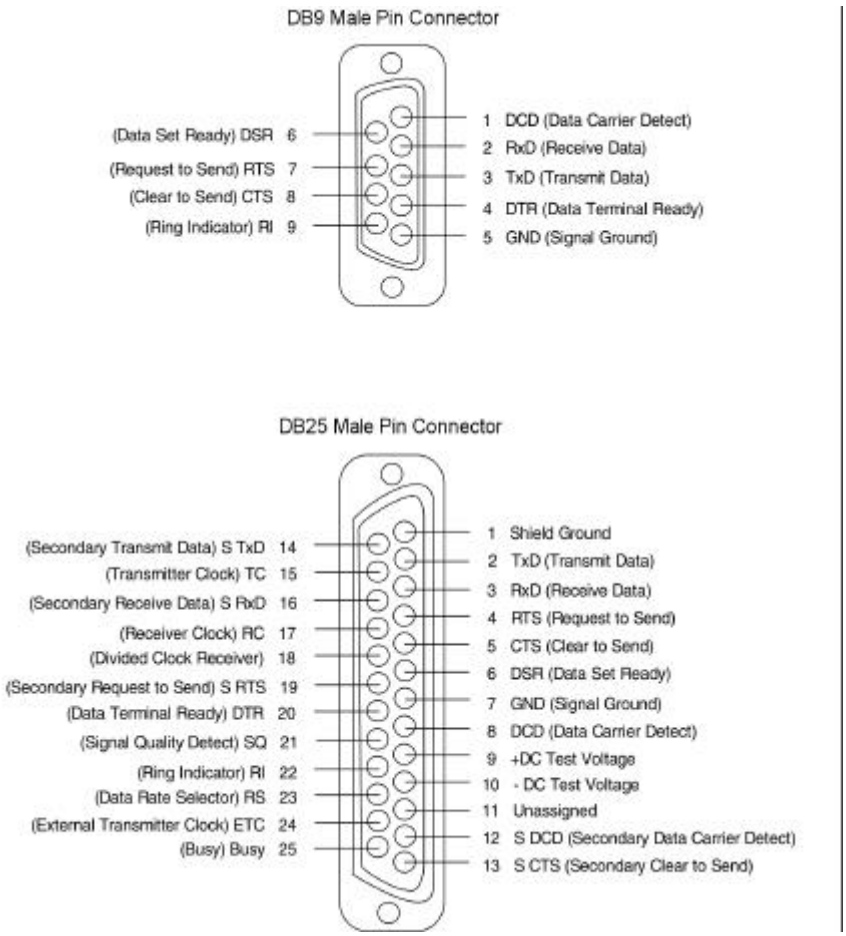

Figure C-1 DB9 and DB25 Connector Pin Assignments for Signal to Host

Cable Supplied with SmartPass

SmartPass may be delivered with a multiwire cable (ordered as a separate accessory), which is a 13-pair pigtail. In some instances, an alternate 15-pair pigtail may be substituted. The 13-pair pigtail is a colored wire pair cable, with different colors denoting the individual pairs, one pair of which is red/black. The alternate 15-pair pigtail is a red/black wire pair cable, with numbers on the pairs to denote the individual pairs. Two pairs of the 15-pair pigtail, numbers 14 and 15, are not used.

RS–232 Interface

Table C-2 RS–232 Interface Signal Wiring for Colored Wire Pair Cable

Signal from SmartPass	Colored Pair Wire Cable: Wire Pair from SmartPass	Colored Pair Wire Cable: Color Used	Connect Wire to Host DB9 Pin	Connect Wire to Host DB25 Pin
TxD — SmartPass output	Red/Black	Black	Pin 2	Pin 3
RxD — SmartPass input		Red	Pin 3	Pin 2
Signal ground	Yellow/ Black	Yellow or black	Pin 5	Pin 7
Optional for hardware handshaking				
RTS — SmartPass output	Yellow/Red	Yellow	Pin 8	Pin 5
CTS — SmartPass input		Red	Pin 7	Pin 4

Table C-3 RS–232 Interface Signal Wiring for Alternate Wire Pair Cable

Signal from SmartPass	Alternate Wire Cable: Pairing	Alternate Wire Cable: Color	Connect Wire to Host DB9 Pin	Connect Wire to Host DB25 Pin
TxD — SmartPass output	Pair 1	Black	Pin 2	Pin 3
RxD — SmartPass input		Red	Pin 3	Pin 2
Signal ground	Pair 5	Black or Red	Pin 5	Pin 7
Optional for hardware handshaking				
RTS — SmartPass output	Pair 11	Black	Pin 8	Pin 5
CTS — SmartPass input		Red	Pin 7	Pin 4

RS-422 Interface

Table C-4 RS–422 Interface Signal Wiring for Colored Wire Pair Cable

Signal from SmartPass	Colored Pair Wire Cable		Connect to Signal from Host
	Wire Pair from SmartPass	Color Used	
RS–422 Transmit positive	Yellow/Red	Yellow	Receive (+)
RS–422 Transmit negative		Red	Receive (–)
RS–422 Receive positive	Red/Black	Black	Transmit (+)
RS–422 Receive negative		Red	Transmit (–)

Table C-5 RS–422 Interface Signal Wiring for Alternate Wire Pair Cable

Signal from SmartPass	Alternate Wire Pair		Connect to Signal from Host
	Pairing	Color	
RS–422 Transmit positive	Pair 11	Black	Receive (+)
RS–422 Transmit negative		Red	Receive (–)
RS–422 Receive positive	Pair 1	Black	Transmit (+)
RS–422 Receive negative		Red	Transmit (–)

Wiegand Interface

Table C-6 Wiegand Interface Signal Wiring for Colored Wire Pair Cable

Signal from SmartPass	Colored Pair Wire Cable Wire Pair from SmartPass	Color Used	Connect to Signal from Host
Wiegand Zero Output	Blue/Red	Blue	Data0
Wiegand One Output		Red	Data1
Signal Ground	Yellow/Black	Yellow or black	Ground

Table C-7 Wiegand Interface Signal Wiring for Alternate Wire Pair Cable

Signal from SmartPass	Alternate Wire Pair Pairing	Color	Connect to Signal from Host
Wiegand Zero output	Pair 10	Black	Data0
Wiegand One output		Red	Data1
Signal Ground	Pair 5	Black or red	Ground

Power Supply Connections

AC Power

Table C-8 AC Transformer Connections for Colored Pair Wire Cable

Signal From SmartPass	Colored Pair Wire Cable Wire Pair from SmartPass	Color Used	Connect to Transformer Terminal Strip
Main power input	Brown/Red and Orange/ Red	Brown/ Orange	L1
Main power return		Red/Red	L2

Table C-9 AC Transformer Connections for Alternate Wire Cable

Signal From SmartPass	Alternate Wire Cable		Connect to Transformer Terminal Strip
	Pairing	Color	
Main power input	Pair 12 and Pair 13	Black/Black	L1
Main power return		Red/Red	L2

Low-Voltage DC Power

Table C-10 Low Voltage DC Cable Connections for Colored Pair Wire Cable

Signal from SmartPass	Colored Pair Wire Cable		Connection Use
	Wire Pair from SmartPass	Color Used	
Main power input	Brown/Red and Orange/ Red	Brown and Orange	16 to 28 V DC + terminal
Main power return		Red and Red	16 to 28 V DC – terminal

Table C-11 Low Voltage DC Cable Connections for Alternate Wire Cable

Signal from SmartPass	Alternate Wire Cable		Connection Use
	Pairing	Color	
Main power input	Pair 12 and Pair 13	Black and Black	16 to 28 V DC + terminal
Main power return		Red and Red	16 to 28 V DC – terminal

Input/Output Cabling Assignments

Table C-12 Sense Input/Output Cabling Assignments for Colored Wire Pair Cable

Pair	Pin	Color	Signal	Description	Typical Function
Blue/ Red	E	Blue	WGND0	Wiegand data0	Parking/access control applications
	F	Red	WGND1	Wiegand data1	Parking/access control applications
White/ Red	L	White	Lock	Tag lock output, active-closed	Testing maintenance
	M	Red	Lock_RTN	Tag lock return	Testing maintenance
Green /Red	N	Green	Sense Input0	Sense Input0 (loop), active-closed	Loop and presence detect
	P	Red	Sense Input0_RTN	Sense Input0 return; not isolated from signal ground	Loop and presence detect
Blue/ Black	R	Blue	Sense Input1	Sense Input1, active-closed	General-purpose sense input, not used to detect presence.
	S	Black	Sense Input1_RTN	Sense Input1 return; not isolated from signal ground	General-purpose sense input, not used to detect presence.
Brown /Black	T	Black	Out0_COM	Sense Output0 (tag detect), common terminal	Switched output to control gate
	U	Brown	Out0_No	Sense Output0 normally open terminal	Switched output to control gate
Orange/ Black	V	Black	Out0_COM	Sense Output0 (tag detect output), common terminal	Switched sense output for any external control (light, gate, buzzer, etc.)

Table C-12 Sense Input/Output Cabling Assignments for Colored Wire Pair Cable

Pair	Pin	Color	Signal	Description	Typical Function
	W	Orange	Out 0 Normally Closed	Sense Output0 normally closed terminal	Switched sense output for any external control (light, gate, buzzer, etc.)
Green /Black	X	Black	Out1_ COM	Sense Output1, common terminal	Switched sense output
	Y	Green	Out1_NO	Sense Output1 normally open terminal	Switched sense output
White/ Black	Z	Black	Out1_ COM	Sense Output1, common	Switched sense output
	a	White	Out1_NO	Sense Output1 normally closed terminal	Switched sense output
Yellow /Black	b	Yellow	GND	logic ground	Signal ground (used with RS-232 and Wiegand communications)
	c	Black	GND	logic ground	Signal ground (used with RS-232 and Wiegand communications)

Table C-13 Sense Input/Output Cabling Assignments for Alternate Wire Cable

Alternate Wire Pair Cable			Signal	Description	Typical Function
Pairing	Pin	Color			
Pair 10	E	Black	WGND0	Wiegand data0	Parking/access control applications
	F	Red	WGND1	Wiegand data1	Parking/access control applications
Pair 8	L	Black	Lock	Tag lock sense output, active-closed	Testing maintenance
	M	Red	Lock_RTN	Tag lock return	Testing maintenance
Pair 9	N	Black	Sense Input0	Sense Input0 (loop), active-closed	Loop and presence detect
	P	Red	Sense Input0_RTN	Sense Input0 return; not isolated from signal ground	Loop and presence detect
Pair 4	R	Black	Sense Input1	Sense Input1, active-closed	General-purpose sense input, not used to detect presence.
	S	Red	Sense Input1_RTN	Sense Input1 return; not isolated from signal ground	General-purpose sense input, not used to detect presence.
Pair 6	T	Black	Out0_COM	Sense Output0 (tag detect), common terminal	Switched sense output to control gate
	U	Red	Out0_No	Sense Output0 normally open terminal	Switched sense output to control gate
Pair 7	V	Black	Out0_COM	Sense Output0 (tag detect output), common terminal	Switched sense output for any external control (light, gate, buzzer, etc.)
	W	Red	Out 0 Normally Closed	Sense Output0 normally closed terminal	Switched sense output for any external control (light, gate, buzzer, etc.)
Pair 3	X	Black	Out1_COM	Sense Output1, common terminal	Switched sense output
	Y	Red	Out1_NO	Sense Output1 normally open terminal	Switched sense output

Alternate Wire Pair Cable			Signal	Description	Typical Function
Pairing	Pin	Color			
Pair 2	Z	Black	Out1_ COM	Sense Output1, common	Switched sense output
	a	Red	Out1_NO	Sense Output1 normally closed terminal	Switched sense output
Pair 5	b	Black	GND	logic ground	Signal ground (used with RS-232 and Wiegand communications)
	c	Red	GND	logic ground	Signal ground (used with RS-232 and Wiegand communications)

Summary Table

Table C-14 All Cabling Assignments for Colored Wire Pair Cable or Alternate Wire Pair Cable

Colored Wire Pair Cable			Alternate Wire Pair Cable		Signal	Description	Typical Function
Pair	Pin	Color	Pair	Color			
Red/ Black	A	Black	Pair 1	Black	TX232, RX422+, IF485-	RS-232 transmit, RS-422 receive positive, RS-485 negative	SmartPass output, host input
	B	Red		Red	RX232, RX422-, IF485+	RS-232 receive, RS-422 receive negative, RS-485 positive	SmartPass input, host output
Yellow/ Red	C	Yellow	Pair 11	Black	RTS232, TX422	RS-232 request to send or RS-422 transmit positive	SmartPass output, host input for hardware handshaking
	D	Red		Red	CTS232, TX422	RS-232 clear to send or RS-422 transmit negative	SmartPass input, host output for hardware handshaking

Summary Table

Table C-14 All Cabling Assignments for Colored Wire Pair Cable or Alternate Wire Pair Cable

Colored Wire Pair Cable			Alternate Wire Pair Cable		Signal	Description	Typical Function
Pair	**Pin**	**Color**	**Pair**	**Color**			
Blue/ Red	E	Blue	Pair 10	Black	WGND0	Wiegand data0	Parking/access control applications
	F	Red		Red	WGND1	Wiegand data1	Parking/access control applications
Orange /Red	G	Orange	Pair 13	Black	18V	Main power input	
	H	Red		Red	18V_RTN	Main power return	
Brown/ Red	J	Brown	Pair 12	Black	18V	Main power input	
	K	Red		Red	18V_RTN	Main power return	
White/ Red	L	White	Pair 8	Black	Lock	Tag lock sense output, active-closed	Testing maintenance
	M	Red		Red	Lock_RTN	Tag lock return	Testing maintenance
Green/ Red	N	Green	Pair 9	Black	Sense Input0	Sense input0 (loop), active-closed	Loop and presence detect
	P	Red		Red	Sense Input0_RTN	Sense input0 return; not isolated from signal ground	Loop and presence detect
Blue/ Black	R	Blue	Pair 4	Black	Sense Input1	Sense input1, active-closed	General-purpose sense input, not used to detect presence.
	S	Black		Red	Sense Input1_RTN	Sense input1 return; not isolated from signal ground	General-purpose sense input, not used to detect presence.
Brown/ Black	T	Black	Pair 6	Black	Out0_COM	Sense output0 (tag detect), common terminal	Switched sense output to control gate
	U	Brown		Red	Out0_No	Sense output0 normally open terminal	Switched sense output to control gate

Summary Table

Table C-14 All Cabling Assignments for Colored Wire Pair Cable or Alternate Wire Pair Cable

Colored Wire Pair Cable			Alternate Wire Pair Cable		Signal	Description	Typical Function
Pair	**Pin**	**Color**	**Pair**	**Color**			
Orange /Black	V	Black	Pair 7	Black	Out0_COM	Sense output0 (tag detect output), common terminal	Switched sense output for any external control (light, gate, buzzer, etc.)
	W	Orange		Red	Out 0 Normally Closed	Sense output0 normally closed terminal	Switched sense output for any external control (light, gate, buzzer, etc.)
Green/ Black	X	Black	Pair 3	Black	Out1_COM	Sense output1, common terminal	Switched sense output.
	Y	Green		Red	Out1_NO	Sense output1 normally open terminal	Switched sense output
White/ Black	Z	Black	Pair 2	Black	Out1_COM	Sense output1, common	Switched sense output
	a	White		Red	Out1_NO	Sense output1 normally closed terminal	Switched sense output
Yellow/ Black	b	Yellow	Pair 5	Black	GND	logic ground	Signal ground (used with RS-232 and Wiegand communications)
	c	Black		Red	GND	logic ground	Signal ground (used with RS-232 and Wiegand communications)

D

Command Quick Reference

The command numbers consist of from 2 to 4 hex digits. The letters* N *or* S *may follow a command number. The letter* N *indicates that part of the command number is variable. The letter* S *indicates the requirement for an alphanumeric data string that is to be included immediately following the command number. Hex digits (0–9, A–F) in either uppercase or lowercase characters may be used in data strings and for hex digits A–F.

Table D-1 on page D-3 lists factory default settings. Table D-2 on page D-5 lists all of the commands available to users. Table D-3 on page D-13 lists the same commands by command name.

Factory Default Settings

Table D-1 SmartPass Default Configuration Settings

Parameter	Setting	Command
Operating mode	Data	00
Baud rate	9600	1005
Stop bits	1	1010
Parity	None	1020
End-of-line delay	0 ms	1030[a]
Time and date appended	Enabled	302
Auxiliary information appended	Disabled	310
Unique ID code criteria	Separation of 1 ID	4100
Valid ID code criteria	1 acquisition	4200[a]
Uniqueness timeout	2 minutes	441[a]
Wiegand mode	Disabled	450
Tag translation mode	Disabled	452
Wiegand transmit mode	1 second	4601
Dual processing mode	Reset on A, Transmit on A	4800
Reader ID number	00	6000
Communications protocol	Basic	610

Table D-1 SmartPass Default Configuration Settings (Continued)

Parameter	Setting	Command
Error correcting protocol (ECP) timeout	12.7 sec	612FE
Flow control	Software (XON/XOFF)	6141
Start-of-message character	# (23 hex)	6150[a]
Buffer control mode	Disabled	6160
Echo mode	Enabled	6171
sense output control	Predefined	621
RF-by-input control	Enabled	641
RF operating frequency	902 MHz	64200
RF operating range	Maximum	6431F
sense output pulse duration	228 ms	67C
Presence without tag reports	Disabled	6900
Minimum presence true period	0 ms	6910[a]
RF-off control	Timeout or no presence	6922
RF timeout	Never true	693F
Input inversion	Disabled	6940
Serial number	SSSSSS (6 digit number)	695
Store hardware configuration	Hardware configuration not known	696
Periodic system check tag	Disabled	810
Periodic check tag interval	30 min	8135[a]
Check tag location	Internal	8160[a]
Input status change reports	Disabled	820

a. Fixed parameter, not changeable by user.

Numerical Command List

Note: *The following conventions are used in Table D-2:*

- Items in ***bold italics*** identify factory default settings.
- Only the data portion of the command number is shown.
- Only the command-related data portion of the reader message is shown.
- Refer to Chapter 6, “Communication Protocols,” for the complete syntax of commands and messages.

Table D-2 SmartPass Commands Listed By Number

Number	Command Name	Reader Message
00	***Switch to data mode***	***Done***
01	Switch to command mode	Done
05	Switch to download mode	Done
06	Transmit buffer entry	Done, Error, or Tag Data Done = buffer empty Error = not in buffer control mode Tag Data = highest priority tag ID
1000	Set baud rate = 110 baud	Done or Error
1001	Set baud rate = 300 baud	Done or Error
1002	Set baud rate = 1200 baud	Done or Error
1003	Set baud rate = 2400 baud	Done or Error
1004	Set baud rate = 4800 baud	Done or Error
1005	***Set baud rate = 9600 baud***	***Done or Error***
1006	Set baud rate = 19.2 K baud	Done or Error
1010	***Use one stop bit***	***Done***
1011	Use two stop bits	Done
1020	***Disable parity***	***Done***
1021	Select even parity	Done
1022	Select odd parity	Done

Table D-2 SmartPass Commands Listed By Number

Number	Command Name	Reader Message
20S...S	Set time S...S = HH:MM:SS or HH:MM:SS:hh	Done or Error
21S...S	Set date S...S = MM/DD/YY	Done or Error
22	Display time and date	HH:MM:SS.hh MM/DD/YY
300	Disable time and date append	Done or Error
302	***Enable time and date append***	***Done or Error***
310	***Disable aux info append***	***Done or Error***
311	Enable aux info append	Done or Error
40	Transmit all IDs	Done
4100	***Select one ID separation***	***Done***
4101	Select two ID separation	Done
43	Buffer all IDs	Done
450	***Disable Wiegand mode***	***Done***
451	Enable Wiegand mode	Done
452	Disable tag translation mode	Done
453	Enable tag translation mode	Done
46NN	***Set Wiegand retransmit interval*** ***NN = 01–FF seconds***	***Done or Error***

Table D-2 SmartPass Commands Listed By Number

Number	Command Name	Reader Message
48N	***Select dual-frame processing mode*** ***N = 0–3*** ***0 = Reset uniqueness on A, transmit A*** ***1 = Reset uniqueness on B, transmit B*** ***2 = Reset uniqueness on A, transmit both*** ***3 = Reset uniqueness on B, transmit both***	***Done***
505	Display version	Model [model] Ver [ver no.] SN [serial no.]
506	Display hardware configuration information	S...S S...S = ASCII string (maximum length of 20 characters)
520	Display power fail bit	PWRB Px R0 P0 = no power fail has occurred P1 = power fail has occurred
521	Display reader ID number	RDID xx xx = 00–FF
522	Display comm port parameters	MAIN Bx Sx Px D0 B0 = 110 B1 = 300 B2 = 1200 B3 = 2400 B4 = 4800 B5 = 9600 B6 = 19.2 S0 = one stop bit S1 = two stop bits P0 = no parity P1 = even P2 = odd D0 = EOL delay of 0 ms
524	Display appended info status	IDAP Tx Dx Xx T0 = time not appended T1 = time appended D0 = date not appended D1 = date appended X0 = aux info not appended X1 = aux info appended

Table D-2 SmartPass Commands Listed By Number

Number	Command Name	Reader Message
525	Display comm protocol	ECPS Px Txx Xx S0 P0 = basic P1 = ECP P2 = echo Inquiry Txx = ECP timeout ms = 50 * xx TFF = disabled ECP timeout X0 = no flow control X1 = software flow control X2 = hardware flow control S0 = SOM character is #
526	Display I/O status	IOST Cx Ox Ix Dx C0 = host controls outputs C1 = predefined output mode O0 = both outputs off O1 = output0 on O2 = output1 on O3 = both outputs on I0 = both inputs false I1 = input0 true I2 = input1 true I3 = both inputs true D0–DF = output pulse duration (4,8,12,16,20,24,32,40,48,60,76,1 52 228,300,376,752 ms)
527	Display RF status	RFST Cx Ox T1 C0 = RF controlled by host C1 = RF-by-input control O0 = RF off O1 = RF on T1 = uniqueness timeout of 2 min
529	Display presence input status	PRST Px D0 Ax Tx Ix P0 = disable presence w/o tag reports P1 = enable presence w/o tag reports D0 = min presence true period of 0 ms A0 = RF off on timeout A1 = RF off on timeout or tag A2 = RF off on timeout or no presence Tx = RF timeout period T0 = always expired T1–TE = (4,8,12,20,24,32,48,60,92, 152,300,452,600,752 ms) TF = infinite I0 = input inversion disabled I1 = input inversion enabled

Table D-2 SmartPass Commands Listed By Number

Number	Command Name	Reader Message
530	Display RF0 filter status	RF0S Ux V0 U0 = one ID separation U1 = two ID U2 = transmit all U3 = buffer all
532	Display Wiegand mode status	T0F x 0 = disabled 1 = enabled
533	Display Wiegand retransmit interval	WTI xx xx = 01–FF seconds
534	Display tag translation mode	TT x 0 = disabled 1 = enabled
535	Display buffer control status	BCM x 0 = disabled 1 = enabled
536	Display dual-frame processing mode	DUAL x 0 = reset uniqueness on A, transmit A 1 = reset uniqueness on B, transmit B 2 = reset uniqueness on A, transmit both 3 = reset uniqueness on B, transmit both
537	Display echo status	ECHO x 0 = disabled 1 = enabled
540	Display flash checksum	PCKS I0000 Exxxx xxxx = 4-byte ASCII checksum
543	Display boot checksum	BCKS xxxx xxxx = 4-byte ASCII checksum
550	Display periodic check tag status	SCTS Mx T5 M0 = periodic checktag disabled M1 = periodic checktag enabled T5 = periodic interval of 30 min
551	Display selected check tag option	CTAG x 0 = internal 1 = external

Table D-2 SmartPass Commands Listed By Number

Number	Command Name	Reader Message
560	Display input status change	SSTC Ex Mx E0 = status change reports disabled E1 = status change reports enabled M0 = no reporting M1 = report change on input0 M2 = report change on input1 M3 = report change on either input
60NN	***Set reader ID number NN = 00–FF***	***Done***
610	***Select basic protocol***	***Done or Error***
611	Select ECP protocol	Done or Error
612NN	Set ECP timeout NN = 01–FE (1–255) timeout = 50 ms * NN (if NN = FF, timeout is disabled)	Done or Error
612FE	***Set ECP timeout = 12.7 sec***	***Done or Error***
613	Select data inquiry protocol	Done or Error
6140	Disable flow control	Done
6141	***Enable software flow control***	***Done***
6142	Enable hardware flow control	Done
6160	***Disable buffer control mode***	***Done***
6161	Enable buffer control mode	Done
6170	Disable echo	Done
6171	***Enable echo***	***Done or Error***
6200	Turn both outputs off	Done
6201	***Turn output0 on***	***Done***
6202	Turn output1 on	Done
6203	Turn both outputs on	Done

Table D-2 SmartPass Commands Listed By Number

Number	Command Name	Reader Message
621	Select predefined output mode	Done
63	Reset reader	Model [model] Ver [ver no.] SN [serial no.] Copyright [date] AMTECH Corp.
6400	Turn RF off	Done
6401	Turn RF on	Done
641	***Select RF-by-input control***	***Done***
642	Set RF operating frequency	Done
643NN	Set RF operating range	Done
65	Reset power fail bit	Done
660	Test external RAM	Done or Error
661	Display diagnostic results	DIAG Rx Ex Dx Cx R0 = boot ROM OK R1 = boot failed E0 = flash memory OK E1 = flash failed D0 = external RAM OK D1 = RAM failed C0 = RTC OK C1 = RTC failed
664	Test real-time clock	Done or Error
667	Verify boot ROM checksum	Done or Error
668	Verify flash memory checksum	Done or Error
669	Perform all diagnostics Use 661 to display diagnostic results	Done or Error
66F	Load default operating parameters	Done or Error
67N	Set output pulse duration N = 0–F (4,8,12,16,20,24,32,40,48, 60,76,152,228,300,376, 752 ms)	Done or Error

Table D-2 SmartPass Commands Listed By Number

Number	Command Name	Reader Message
67C	***Set output pulse duration = 228 ms***	***Done or Error***
6900	***Disable presence without tag reports***	***Done***
6901	Enable presence without tag reports	Done
6920	Turn RF off on timeout	Done
6921	Turn RF off on timeout/tag	Done
6922	***Turn RF off on timeout/no presence***	***Done***
693N	Set RF timeout N = 0–F (always expired, 4,8,12,20,24, 32,48,60,92,152, 300,452, 600,752, infinite)	Done or Error
693F	***Set RF timeout = infinite***	***Done***
6940	***Disable input inversion***	***Done***
6941	Enable input inversion	Done
695S...S	***Set serial number S...S = ASCII string (maximum length of 6 characters)***	***Done***
696S...S	***Store hardware configuration string S...S = ASCII string (maximum length of 20 characters)***	***Done***
810	***Disable periodic check tag***	***Done***
8110	Invoke check tag	Done
8120	Enable periodic check tag	Done
8160	***Select internal check tag***	***Done***
820	***Disable status change reports***	***Done***
821	Report change on input0	Done
822	Report change on input1	Done

Table D-2 SmartPass Commands Listed By Number

Number	Command Name	Reader Message
823	Report changes on both	Done
90	Load program block	Done, Checksum Error, Program Error, or Verify Error
91	Verify flash checksum	Done or Error
96	Erase flash memory	Done
97	Perform destructive flash test	Done or Error
99	Exit download mode	Model [model] Ver [ver no.] SN [serial no.] Copyright [date] AMTECH Corp.

Alphabetical Command List

Note: *The following conventions are used in Table D-3:*

- Items in ***bold italics*** identify factory default settings.
- Only the data portion of the command number is shown.
- Only the command-related data portion of the reader message is shown.
- Refer to 7 for the complete syntax of commands and messages.

Table D-3 SmartPass Commands Listed by Command Name

Command Name	Code	Reader Message
All IDs transmit	40	Done
Appended info status display	524	IDAP Tx Dx Xx T0 = time not appended T1 = time appended D0 = date not appended D1 = date appended X0 = aux info not appended X1 = aux info appended
Aux info append disable	***310***	***Done or Error***
Aux info append enable	311	Done or Error
Basic protocol select	***610***	***Done or Error***

Table D-3 SmartPass Commands Listed by Command Name

Command Name	Code	Reader Message
Baud rate = 110 baud set	1000	Done or Error
Baud rate = 1200 baud set	1002	Done or Error
Baud rate = 19.2 K baud set	1006	Done or Error
Baud rate = 2400 baud set	1003	Done or Error
Baud rate = 300 baud set	1001	Done or Error
Baud rate = 4800 baud set	1004	Done or Error
Baud rate = 9600 baud set	***1005***	***Done or Error***
Boot checksum display	543	BCKS xxxx xxxx = 4-byte ASCII checksum
Boot ROM checksum verify	667	Done or Error
Buffer all IDs	43	Done
Buffer control mode disable	***6160***	***Done***
Buffer control mode enable	6161	Done
Buffer control status display	535	BCM x 0 = disabled 1 = enabled
Buffer entry transmit	06	Done, Error, or Tag Data Done = buffer empty Error = not in buffer control mode Tag Data = highest priority tag ID
Check tag select internal	***8160***	***Done***
Check tag invoke	8110	Done
Comm port parameters display	522	MAIN Bx Sx Px D0 B0 = 110 B1 = 300 B2 = 1200 B3 = 2400 B4 = 4800 B5 = 9600 B6 = 19.2 S0 = one stop bit S1 = two stop bits P0 = no parity P1 = even P2 = odd D0 = EOL delay of 0 ms

Table D-3 SmartPass Commands Listed by Command Name

Command Name	Code	Reader Message
Comm protocol display	525	ECPS Px Txx Xx S0 P0 = basic P1 = ECP P2 = data inquiry Txx = ECP timeout ms = 50 * xx TFF = disabled ECP timeout X0 = no flow control X1 = software flow control X2 = hardware flow control S0 = SOM character is #
Command mode switch	01	Done
Data inquiry protocol select	613	Done or Error
Data mode switch	***00***	***Done***
Date set S...S = MM/DD/YY	21S...S	Done or Error
Default operating parameters load	66F	Done or Error
Destructive flash test perform	97	Done or Error
Diagnostic results display	661	DIAG Rx Ex Dx Cx R0 = boot ROM OK R1 = boot failed E0 = flash memory OK E1 = flash failed D0 = external RAM OK D1 = RAM failed C0 = RTC OK C1 = RTC failed
Diagnostics perform all Use 661 to display diagnostic results.	669	Done or Error
Download mode exit	99	Model [model] Ver [ver no.] SN [serial no.] Copyright [date] AMTECH Corp.
Download mode switch	05	Done

Table D-3 SmartPass Commands Listed by Command Name

Command Name	Code	Reader Message
Dual-frame processing mode display	536	DUAL x 0 = reset uniqueness on A, transmit A 1 = reset uniqueness on B, transmit B 2 = reset uniqueness on A, transmit both 3 = reset uniqueness on B, transmit both
Dual-frame processing mode select ***N = 0*** ***0 = Reset uniqueness on A, transmit A*** ***1 = Reset uniqueness on B, transmit B*** ***2 = Reset uniqueness on A, transmit both*** ***3 = Reset uniqueness on B, transmit both***	***48N***	***Done***
Echo disable	6170	Done
Echo enable	***6171***	***Done or Error***
Echo status display	537	ECHO x 0 = disabled 1 = enabled
ECP protocol select	611	Done or Error
ECP timeout = 12.7 sec set	***612FE***	***Done or Error***
ECP timeout set NN = 01–FE (1–255) timeout = 50 ms * NN (if NN = FF, timeout is disabled)	612NN	Done or Error
Even parity select	1021	Done
External RAM test	660	Done or Error
Flash checksum display	540	PCKS I0000 Exxxx xxxx = 4-byte ASCII checksum
Flash checksum verify	91	Done or Error
Flash memory checksum verify	668	Done or Error
Flash memory erase	96	Done
Flow control disable	6140	Done
Flow control enable	***6141***	***Done***

Table D-3 SmartPass Commands Listed by Command Name

Command Name	Code	Reader Message
Hardware configuration information display	506	S...S S...S = ASCII string (maximum length of 20 characters)
Hardware configuration string store S...S = ASCII string (maximum length of 20 characters)	***696S...S***	***Done***
Hardware flow control enable	6142	Done
I/O status display	526	IOST Cx Ox Ix Dx C0 = host controls outputs C1 = predefined output mode O0 = both outputs off O1 = output0 on O2 = output1 on O3 = both outputs on I0 = both inputs false I1 = input0 true I2 = input1 true I3 = both inputs true D0–DF = output pulse duration (4,8,12,16,20,24,32,40,48,60, 76,152, 228,300,376,752 ms)
Input inversion disable	***6940***	***Done***
Input inversion enable	6941	Done
Input status change display	560	SSTC Ex Mx E0 = status change reports disabled E1 = status change reports enabled M0 = no reporting M1 = report change on input0 M2 = report change on input1 M3 = report change on either input
Input0 change report	821	Done
Input1 change report	822	Done
Odd parity select	1022	Done
Output pulse duration = 228 ms set	***67C***	***Done or Error***

Table D-3 SmartPass Commands Listed by Command Name

Command Name	Code	Reader Message
Output pulse duration set N = 0–F (4,8,12,16,20,24,32,40,48,60,76, 152, 228,300,376,752 ms)	67N	Done or Error
Output0 turn on	6201	Done
Output1 turn on	6202	Done
Outputs turn off both	6200	Done
Outputs turn on both	6203	Done
Parity disable	***1020***	***Done***
Periodic check tag disable	***810***	***Done***
Periodic check tag enable	8120	Done
Periodic check tag status display	550	SCTS Mx T5 M0 = periodic checktag disabled M1 = periodic checktag enabled T5 = periodic interval of 30 min
Power fail bit display	520	PWRB Px R0 P0 = no power fail has occurred P1 = power fail has occurred
Power fail bit reset	65	Done
Predefined output mode select	***621***	***Done***
Presence input status display	529	PRST Px D0 Ax Tx Ix P0 = disable presence without tag reports P1 = enable presence without tag reports D0 = minimum presence true period of 0 ms A0 = RF off on timeout A1 = RF off on timeout or tag A2 = RF off on timeout or no presence Tx = RF timeout period T0 = always expired T1–TE = (4,8,12,20,24,32, 48, 60,92,152,300,452,600,752 ms) TF = infinite I0 = input inversion disabled I1 = input inversion enabled
Presence without tag reports disable	***6900***	***Done***

Table D-3 SmartPass Commands Listed by Command Name

Command Name	Code	Reader Message
Presence without tag reports enable	6901	Done
Program block load	90	Done, Checksum Error, Program Error, or Verify Error
Reader ID number display	521	RDID xx xx = 00–FF
Reader ID number set NN = 00	***60NN***	***Done***
Reader reset	63	Model [model] Ver [ver no.] SN [serial no.] Copyright [date] AMTECH Corp.
Real-time clock test	664	Done or Error
Report changes both	823	Done
RF off	6400	Done
RF off on timeout	6920	Done
RF off on timeout/no presence	***6922***	***Done***
RF off on timeout/tag	6921	Done
RF on	6401	Done
RF on by input control	***641***	***Done***
RF operating frequency set	642	Done
RF operating range set	643NN	Done
RF status display	527	RFST Cx Ox T1 C0 = RF controlled by host C1 = RF-by-input control O0 = RF off O1 = RF on T1 = uniqueness timeout of 2 min
RF timeout = infinite set	693F	Done
RF timeout set N = 0–F (always expired, 4,8,12,20,24,32, 48,60,92,152,300,452,600,752 ms, infinite)	***693N***	***Done or Error***

Table D-3 SmartPass Commands Listed by Command Name

Command Name	Code	Reader Message
RF0 filter status display	530	RF0S Ux V0 U0 = one ID separation U1 = two ID U2 = transmit all U3 = buffer all
Selected checktag option display	551	CTAG x 0 = internal 1 = external
Serial number set S...S = ASCII string (maximum length of 6 characters)	***695S...S***	***Done***
Status change reports disable	820	Done
Stop bit use one	***1010***	***Done***
Stop bit use two	1011	Done
Tag ID separation select one	***4100***	***Done***
Tag ID separation select two	4101	Done
Tag translation mode disable	***452***	***Done***
Tag translation mode display	534	TT x 0 = disabled 1 = enabled
Tag translation mode enable	453	Done
Time and date append disable	300	Done or Error
Time and date append enable	***302***	***Done or Error***
Time and date display	22	HH:MM:SS.hh MM/DD/YY
Time set S...S = HH:MM:SS or HH:MM:SS:hh	20S...S	Done or Error
Version display	505	Model [model] Ver [ver no.] SN [serial no.]
Wiegand mode disable	***450***	***Done***
Wiegand mode enable	451	Done
Wiegand mode status display	532	T0F x 0 = disabled 1 = enabled

Table D-3 SmartPass Commands Listed by Command Name

Command Name	Code	Reader Message
Wiegand retransmit interval display	533	WTI xx xx = 01–FF seconds
Wiegand retransmit interval set NN = 01–FF seconds	***46NN***	***Done or Error***

E

Using Error Correcting Protocol

This appendix gives helpful information about using Error Correcting Protocol (ECP) and, in particular, how to escape from an ECP "time-out" loop. The SmartPass software user should be thoroughly familiar with the description of ECP given in Chapter 6, "Communications Protocols," in this manual.

Communications in ECP

Under certain conditions, communications between the host and SmartPass may be lost temporarily. The reader or host is sending out a message and waiting for an acknowledgment. When the acknowledgment is not received, the message is sent again. Often the first indication that the SmartPass software is in an ECP "loop" is when the user/technician sees a recurring display of the same message repeated over and over again on the monitor. During such a loss of communications, a large number of tag IDs may be acquired and stored in the buffer which holds as many as 195 time-stamped tag reads.

To escape this repeat loop and safely move the data to the host application, each transmission must be acknowledged, the buffer cleared of any stored and unacknowledged reads, and communications restored. Once the buffer has been cleared, the user may then take the reader out of ECP and/or change the timeout factor to be able to key in commands manually within the allowed time.

Since ECP operates very quickly (about 4 milliseconds), it is difficult to type in the necessary commands within the allowed time. Meta keys may be set in a terminal emulator (ProComm Plus, for example) to enter commands manually within the allowed time.

Setting Up Meta Keys

To set up meta keys, the user must follow the instructions for the terminal emulation program being used. Any value can be assigned to a meta key entry. Table E-1 lists example meta keys and their assigned values that can be used for escaping from an ECP loop.

In Table E-4 the value corresponds to the ECP host response or host message. If the value is used for acknowledgment, the format is:

```
<som><seq><ack><crc><eom>
```

where:

`<som>`	Start-of-message (ASCII # character)
`<seq>`	An echo of the sequence number received from SmartPass. The sequence number should correspond to the data message that is being acknowledged by the host.

`<ack>` ASCII @ character for *ACK* response

`<crc>` SmartPass accepts 4 ASCII < ` > characters (60 hex) as a wild card CRC in lieu of a valid 4-character CRC to facilitate testing and diagnostic checkout.

`<eom>` End-of-message character (ASCII CR)

If the value is used for a host command, the ECP format is:

```
<som><seq><cmd><crc><eom>
```

where:

`<som>` Start-of-message (ASCII # character)

`<seq>` The sequence number. In this case, 0.

`<cmd>` Command number

`<crc>` 4 ASCII < ` > characters (60 hex as a wild card CRC in lieu of a valid 4-character CRC)

`<eom>` End-of-message character (ASCII CR)

Table E-4 Example meta keys and values

Key	Value	Used For
ALT1	#0@```^M	Acknowledgment
ALT2	#1@```^M	Acknowledgment
ALT3	#2@```^M	Acknowledgment
ALT4	#3@```^M	Acknowledgment
ALT5	#4@```^M	Acknowledgment
ALT6	#5@```^M	Acknowledgment
ALT7	#6@```^M	Acknowledgment
ALT8	#001```^M	Switches to command mode
ALT9	#0610```^M	Switches to basic protocol
ALT0	#0801```^M	Saves parameters to EEPROM

In the examples above, meta keys ALT1 and ALT2 are used to acknowledge the reader’s sign-on message and copyright message line. Meta keys ALT3 through ALT7

are used to acknowledge the first 5 tag reads in the buffer.

Meta keys ALT8 and ALT9 are used to switch the reader into command mode and disable ECP by switching the reader into basic communication protocol.

Note: *The communication mode cannot be changed with data still in the reader's buffer, so additional meta keys may have to be programmed with additional acknowledgment sequences (cycling hex digits 0-9 and A-F) if more tag reads remain in the buffer.*

Understanding Sequence Numbers

Tag reads are stored in the buffer in one of two numbering schemes, depending on software version. In the sequential numbering scheme, tags reads are assigned consecutive sequence numbers, for example 1, then 2, then 3, and so on. In the even numbering scheme, tag reads are assigned only even numbers, for example 2, then 4, then 6, and so on.

With consecutive sequence numbers, the first tag read line would be displayed as #1DNT123457TimeDate (for example) and would scroll continuously until acknowledged. The next tag read line would then be displayed as #2DNT123456 (for example) and would scroll until acknowledged.

With even sequence numbers, the display would first be #2DNT123457Time/Date and then the next line displayed would be #4DNT123456, the next #6DNT123455, and so on.

You must acknowledge the sequence number that is displayed.

Reader Power Down or Power Loss

In the event of power loss or power down while the reader is in ECP, the buffer display will start with #0modelAI1620Ver2.50/N89001ABCD (for example). After acknowledgment of the first message line, then the reader will display #1CopyrightAMTECH CORPABCD. After acknowledgment of the second entry, the third entry will be a tag read line beginning with the start of message character and sequence number.

Escaping from an ECP Loop

To escape from an ECP "loop" perform the following actions

1. Acknowledge the reader's sign-on message and the tag reads in the buffer by pressing the meta key that corresponds to the message line on the screen. The sequence number should correspond to the data message that is being acknowledged.
2. When the buffer is cleared of all tag reads, switch to command mode by pressing the meta key ALT8 (or any meta key that you have programmed with the correct command value).
3. Switch to basic communications protocol by pressing the meta key ALT9.

Changing the Time-out Value

The user can also configure the reader for an ECP timeout value of approximately 10 seconds by entering, while in command mode, the command #612NN

where:

NN is a hexadecimal number that specifies the timeout interval. In this case, use C8 to specify approximately 10 seconds.

A meta key with the following syntax can also be created:

```
#0612C8‘‘‘‘^M
```

This meta key changes timeout value to approximately 10 seconds.

Having ten seconds allows the user enough time to enter commands to clear the buffer of as many tag reads as necessary, without creating many meta keys.