dAp technologies

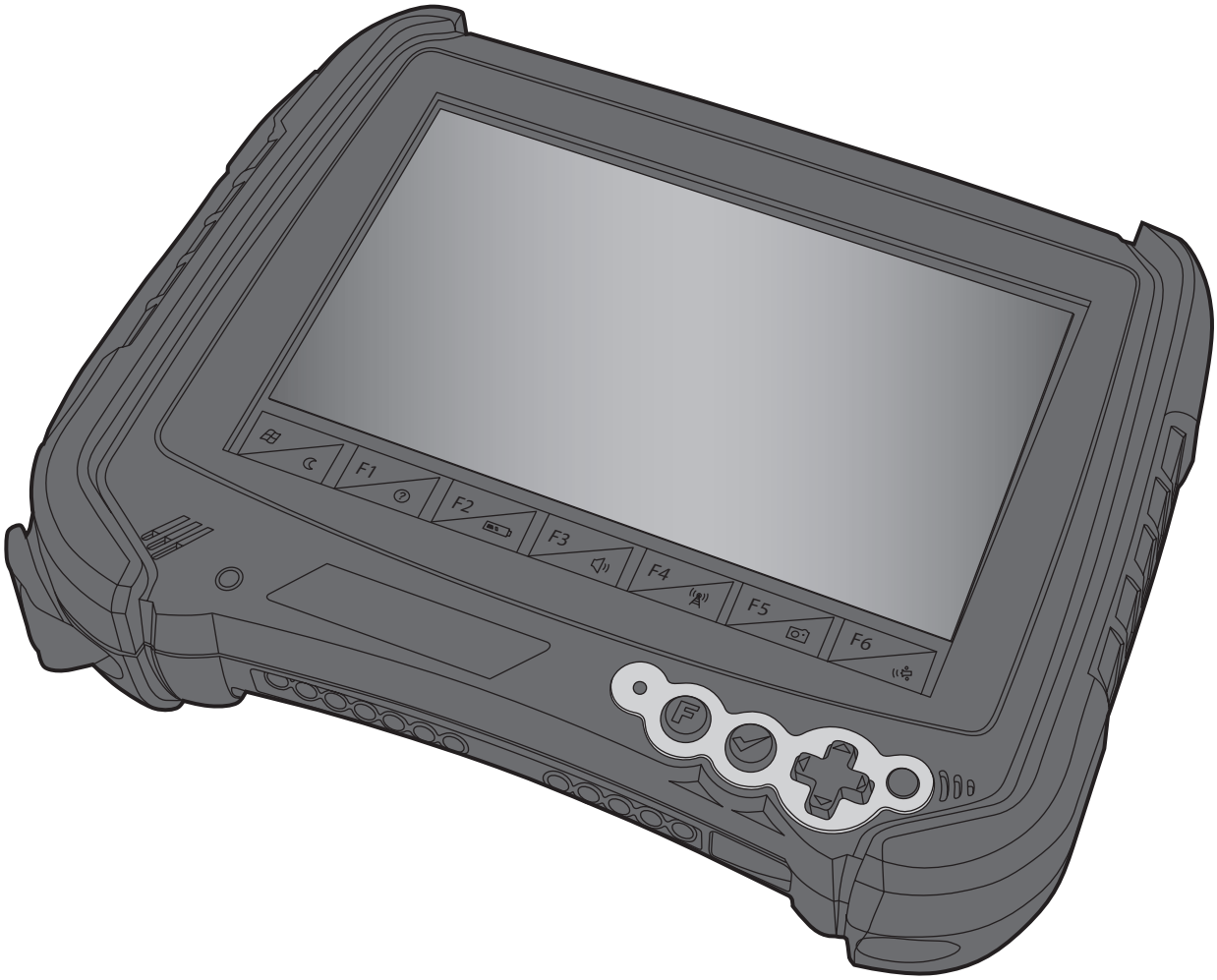

M9000
User's Guide

PN: 769-00005 • May 2012

M9010 is a registered trademark of DAP Technologies. Microsoft and MS-DOS® are registered trademarks of Microsoft Corporation.

Table of Contents

1.0 Introduction . . . 7

1.1 User and Product Safety . . . 7
1.2 LED and LASER Safety Information . . . 7
1.3 FCC Interference Statement . . . 7
1.4 Industry Canada Statement . . . 7
1.5 Battery Safety . . . 7
1.6 Warranty Statements . . . 8
1.7 Warranty and After Service . . . 8
1.8 Europe – EU Declaration of Conformity . . . 8
1.9 European Union CE Marking and Compliance Notices . . . 9
1.10 Specifications . . . 10

2.0 Getting Started . . . 11

2.1 What's In the Package . . . 11
2.2 Installing Optional Memory Cards . . . 11
2.3 Install the Battery . . . 13
2.4 Charge the Battery . . . 13
2.4.1 Plugging In . . . 13
2.4.2 LED Indicators . . . 14
2.5 Operating the Unit . . . 15
2.5.1 Turning the Unit On . . . 15
2.5.2 Calibrating the Touchscreen . . . 15
2.5.3 Launching an Application . . . 16
2.5.3.1 Using the Stylus . . . 16
2.5.3.2 Using the Nav Button . . . 16
2.5.4 Entering Data . . . 17
2.5.5 Using the Function Button . . . 17
2.5.5.1 Function Button Key Combinations . . . 17
2.5.5.2 Function Button with Function Keys . . . 17
2.5.6 Navigating the Display . . . 18
2.5.6.1 The Task Bar . . . 18
2.5.6.2 The Onscreen Keyboard . . . 18
2.5.6.3 Entering the Data . . . 18
2.6 DAP Configuration Center . . . 19
2.6.1 System Info . . . 19
2.6.2 Display Options . . . 19
2.6.3 Tablet PC Settings . . . 19
2.6.3.1 Display Tab – Configure . . . 19
2.6.3.2 Display Tab – Calibrate . . . 19
2.6.3.3 Display Tab – Reset . . . 20
2.6.3.4 Other Tab – Handedness . . . 20
2.6.3.5 Other Tab – Pen and Touch . . . 20
2.6.3.5.1 Pen Options Tab – Configure Double-Tap . . . 21
2.6.3.5.2 Pen Options Tab – Configure Press and Hold . . . 21
2.6.3.5.3 Pen Options Tab – Configure Start Tablet PC Input Panel . . . 22
2.6.3.5.4 Flicks Tab – Navigational . . . 23
2.6.3.5.5 Flicks Tab – Sensitivity . . . 23
2.6.3.5.6 Handwriting Tab . . . 24
2.6.3.5.7 Touch Tab . . . 24
2.6.3.6 Other Tab – Go to Input Panel Settings . . . 24
2.6.4 Power Options . . . 25
2.6.5 Charger Config . . . 25
2.6.6 Hotkey . . . 25
2.7 Setting Up Wireless LAN . . . 26
2.8 Using the 1D Barcode Scanner . . . 26
2.9 Setting Up Link One for Reading 1D Laser Barcodes . . . 26
2.9.1 Unload Button . . . 27
2.9.2 Hide Button . . . 27
2.9.3 Settings Button . . . 27
2.9.4 Settings Window . . . 27
2.9.4.1 Communication Tab . . . 27
2.9.4.1.1 Port . . . 28
2.9.4.1.2 DTR High / RTS High . . . 29
2.9.4.1.3 Hardware Pin Events . . . 29
2.9.4.2 Keyboard Tab . . . 30
2.9.4.2.1 Interkey Delay . . . 30
2.9.4.2.2 Key Settings . . . 30
2.9.4.2.3 Hot Keys . . . 32
2.9.4.2.4 Keyboard Capture — External USB Device . . . 36
2.9.4.2.5 Record Key Sequence . . . 39
2.9.4.3 Data Editing Tab . . . 40
2.9.4.3.1 Wizard . . . 41
2.9.4.3.2 Edit Script . . . 43
2.9.4.3.3 Browse Script Folder . . . 43
2.9.4.4 Misc Tab . . . 43
2.9.4.4.1 Use Log File . . . 43
2.9.4.4.2 Set Password . . . 44
2.9.4.4.3 Settings Location . . . 44
2.10 Link*One Scripting . . . 45
2.10.1 Overview . . . 45
2.10.2 Lua Language . . . 45
2.10.3 Script Events . . . 45
2.10.4 Event Methods . . . 45
2.10.4.1 onStart() . . . 45
2.10.4.2 onEnd() . . . 45
2.10.4.3 onData(data, length) . . . 45
2.10.4.4 onHotKey(name) . . . 46
2.10.4.5 onKeyboardCapture(name, data) . . . 46
2.10.4.6 onExternalData(data, length) . . . 46
2.10.4.7 onTimer() . . . 46
2.10.4.8 onCTS(status) . . . 47
2.10.5 Script Methods . . . 47
2.10.6 Output/User Feedback . . . 48
2.10.6.1 beep(frequency, duration) . . . 48
2.10.6.2 blinkIcon(icon, duration) . . . 48
2.10.6.3 log(filename, message) . . . 48
2.10.6.4 messageBox(title, message, type) . . . 48
2.10.6.5 playSound(filename, options) . . . 49
2.10.6.6 playSystemSound(systemEvent, options) . . . 49
2.10.6.7 send(data) . . . 49
2.10.6.8 sendSerialData(data, length) . . . 50
2.10.6.9 sendSubscriberData(data, length) . . . 50
2.10.7 Windows . . . 51
2.10.7.1 enumWindows(handle) . . . 51
2.10.7.2 findWindow(title, class) . . . 51
2.10.7.3 getForegroundWindow() . . . 51
2.10.7.4 getWindowClass(handle) . . . 51
2.10.7.5 getWindowClass(handle) . . . 52
2.10.7.6 getWindowText(handle) . . . 52
2.10.7.7 setForegroundWindow(handle) . . . 52
2.10.7.8 getWindowText(handle, text) . . . 52
2.10.7.9 windowOperation(handle, operation) . . . 53
2.10.8 Clipboard . . . 53
2.10.8.1 getClipboardData() . . . 53
2.10.8.2 setClipboardData(text) . . . 53
2.10.9 Application Launch . . . 54
2.10.9.1 closeAppHandle(handle) . . . 54
2.10.9.2 isAppRunning(handle) . . . 54

2.10.9.3 run(program, argument, delay) 54
2.10.10 Serial Port 55
2.10.10.1 closePort() 55
2.10.10.2 getDTR() 55
2.10.10.3 getRTS() 55
2.10.10.4 openPort() 55
2.10.10.5 setDTR(status) 56
2.10.10.6 setRTS(status) 56
2.10.11 Miscellaneous 56
2.10.11.1 ean128(data, strict) 56
2.10.11.2 exit() 56
2.10.11.3 exitWindows(options) 57
2.10.11.4 getProfile() 57
2.10.11.5 getTickCount() 57
2.10.11.6 lockWorkStation() 57
2.10.11.7 setProfile(profile) 58
2.10.11.8 setTimer(interval) 58
2.10.11.9 sleep(duration) 58
2.10.12 Notification Area Icon 58
2.10.13 Migration guide WLinq 3.x to Link*One 59
2.10.13.1 Duplicate String Filter 59
2.10.13.2 Case Setting 59
2.10.13.3 Character Translation 59
2.10.13.4 Send Pre- and Postfix Keys 59
2.10.13.5 Lock Output Window 59
2.10.13.6 Initialization String 59
2.10.13.7 Filter Unknown Data Strings 59
2.10.13.8 Input Data Replacements 60
2.10.13.9 Criteria 60
2.10.13.10 Data Format Output 60
2.10.14 Support for Thin Clients, Java Applications, and Flash Applications 62
2.10.15 Lua Copyright 62
2.10.16 Version History 62

3.0 Operating the Unit 63

3.1 GPS Instructions 63
3.1.1 Requirements: 63
3.1.2 Set up to use the GPS 63
3.1.3 Integration to Windows 7 64
3.2 DAP-Imager Instructions 64
3.2.1 What is DAP-Imager 64
3.2.2 Selecting the Right Mode 64
3.2.3 Pictures 64
3.2.3.1 How to Take a Picture 64
3.2.3.2 Flash 64
3.2.3.3 Geotagging 65
3.2.3.3.1 How to enable the GPS 65
3.2.3.3.2 How to View Geotagging Data 65
3.2.3.4 How to Locate a Saved Picture 65
3.2.3.5 General Options 65
3.2.4 Barcodes 65
3.2.4.1 How to Scan Barcodes 66
3.2.4.1.1 Using ScannerManager 66
3.2.4.1.2 Using DAP-Imager as a Stand-Alone Application 66
3.2.4.2 Decoder Configuration 66
3.2.5 .INI Configuration File 66
3.2.6 [General] 67
3.2.6.1 TargetFolder = %PICTURES%\%YEAR%-%MONTH%-%DAY% 67
3.2.6.2 FileNameTemplate = %HOUR%h%MINUTE%m%SECOND%s . . 67
3.2.6.3 DefaultImagerMode = Portrait 67
3.2.6.4 FlashLightDurationMs = 10000 67
3.2.6.5 Func1VirtualKey = 135 67
3.2.6.6 Func2VirtualKey = 117 67
3.2.6.7 Func1KeyModifiers = 0 67
3.2.6.8 Func2KeyModifiers = 0 67
3.2.6.9 Func1KeySystemWide = 1 67
3.2.6.10 Func2KeySystemWide = 0 67
3.2.7 [Camera] 67
3.2.7.1 InactiveTimeBeforeStandbyLevel1 = 10000 67
3.2.7.2 ActivateDapImagerOnTrigger = OFF 67
3.2.7.3 ShowImageNameOnPreview = OFF 67
3.2.8 [Barcodes] 67
3.2.8.1 EnableAutoPreview = ON 67
3.2.8.2 PreviewWndRect = 0 0 320 240 67
3.2.8.3 UIPolicy = Legacy 67
3.2.8.4 DefaultFocus = 3733 68
3.2.8.5 Aimer = ON 68
3.2.8.6 DecodeAfterAutofocus = ON 68
3.2.8.7 MaxNbrResults = 1 68
3.2.8.8 DecodeTimeoutMs = 1500 68
3.2.8.9 MaxNbrAttempts = 1 68
3.2.8.10 InactiveTimeBeforeStandbyLevel1 = 10000 68
3.2.8.11 InactiveTimeBeforeStandbyLevel2 = 10000 68
3.2.8.12 KbWedge = OFF 68
3.2.8.13 AddTab = OFF 68
3.2.8.14 AddEnter = ON 68
3.2.8.15 Preamble = ... 68
3.2.8.16 Postamble = ... 68
3.2.8.17 InterCharDelay = 0 68
3.2.8.18 MaxGainWithoutMVLight = 2500 68
3.2.8.19 MinGainWithMovieLight = 1000 68
3.2.8.20 MaxGain = 4000 68
3.2.8.21 GainStep = 200 68
3.2.8.22 IdealGain = 2000 68
3.2.8.23 FlashIntensityStep = 100 68
3.2.8.24 MaxFlashIntensity = 100 68
3.2.8.25 MaxShutter = 4000 68
3.2.8.26 ShutterStep = 260 68
3.2.8.27 IdealShutter = 575 68
3.2.8.28 AppendSymbology = OFF 68
3.2.9 [OCR] 68
3.2.10 [ImagerModes] 68
3.2.8.1 ModeList = Portrait,Landscape,Macro,Barcode, ... 68
3.2.11 [ImagerMode:XXXX] 68
3.2.11.1 ModeType = 0 68
3.2.11.2 IconID = 142 68
3.2.11.3 SelectionButtonImageFileName = res\button-mode-portrait80.png 68
3.2.11.4 Enabled = ON 69
3.2.11.5 AutoFlash = ON 69
3.2.11.6 GpsReportTypes = 1 69
3.2.11.7 PreviewWidth = 640 69
3.2.11.8 PreviewHeight = 480 69
3.2.11.9 StillWidth = 1600 69
3.2.11.10 StillHeight = 1200 69

3.2.11.11 ColorSpace = 16 69
3.2.11.12 FrameRate = 30.000000 69
3.2.11.13 Shutter = 10000 69
3.2.11.14 Brightness = 5000 69
3.2.11.15 GlobalGain = 0 69
3.2.11.16 Exposure = 5000 69
3.2.11.17 FlipMode = 1 69
3.2.11.18 AutoExposure = ON 69
3.2.11.19 LightingMode = 0 69
3.2.11.20 LightingPower = 0 69
3.2.11.21 Aimer = OFF 69
3.2.11.22 Compression = ON 69
3.2.11.23 CompressionRatio = 13 69
3.2.11.24 FocusPosition = 500 69
3.2.11.25 Autofocus = ON. 69
3.2.11.26 WhiteBalancePreset = 0 69
3.2.11.27 ManualWhiteBalance = OFF 69
3.2.11.28 WhiteBalanceKelvin = 8267 69
3.2.11.29 PreviewToWindow = ON 69
3.2.12 [Permissions] 69
3.2.12.1 Option(More) = 3 69
3.3 Command-Line Options 70
3.3.1 Syntax 70

4.0 Programming the Unit 71

4.1 Bar Code Parameter Menus 71
4.2 Bar Code Settings 74
4.2.1 Set Default Parameter 74
4.2.2 Beeper Volume 74
4.2.3 Beeper Tone 74
4.2.4 Beeper Frequency Adjustment 74
4.2.5 Laser On Time 75
4.2.6 Aim Duration 75
4.2.7 Scan Angle 75
4.2.8 Power Mode 75
4.2.9 Triggering Modes. 76
4.2.10 Time-out Between Same Symbol 76
4.2.11 Beep After Good Decode 76
4.2.12 Transmit “No Read” Message 76
4.2.13 Parameter Scanning 77
4.2.14 Linear Code Type Security Level 77
4.2.15 Bi-directional Redundancy 77

5.0 UPC Types 78

5.1 UPC / EAN 78
5.1.1 Enable/Disable UPC-A : Parameter # 0x01 78
5.1.2 Enable/Disable UPC-E : Parameter # 0x02 78
5.1.3 Enable/Disable UPC-E1 : Parameter # 0x0C 78
5.1.4 Enable/Disable EAN-8 : Parameter # 0x04 78
5.1.5 Enable/Disable EAN-13 : Parameter # 0x03 78
5.1.6 Enable/Disable Bookland EAN : Parameter # 0x53. . . . 78
5.1.7 Decode UPC/EAN Supplementals :
Parameter # 0x10 79
5.1.8 Decode UPC/EAN Supplemental Redundancy :
Parameter # 0x50 79
5.1.9 Transmit UPC-A Check Digit : Parameter # 0x28. 80
5.1.10 Transmit UPC-E Check Digit : Parameter # 0x29 80
5.1.11 Transmit UPC-E1 Check Digit : Parameter # 0x2A . . . 80
5.1.12 UPC-A Preamble : Parameter # 0x22. 80
5.1.13 UPC-E Preamble : Parameter # 0x23 80
5.1.14 UPC-E1 Preamble : Parameter # 0x24 81
5.1.15 Convert UPC-E to UPC-A : Parameter # 0x25. 81
5.1.16 Convert UPC-E1 to UPC-A : Parameter # 0x26. 81
5.1.17 EAN Zero Extend : Parameter # 0x27 81
5.1.18 Convert EAN-8 to EAN-13 Type :
Parameter # 0xE0. 81
5.1.19 UPC/EAN Security Level : Parameter # 0x4D 82
5.1.20 UCC Coupon Extended Code : Parameter # 0x55 82
5.2 Code 128 82
5.2.1 Enable/Disable Code 128 : Parameter # 0x08 82
5.2.2 Enable/Disable UCC/EAN-128 :
Parameter # 0x0E. 82
5.2.3 Enable/Disable ISBT 128 : Parameter # 0x54 83
5.2.4 Lengths for Code 128 83
5.3 Code 39. 83
5.3.1 Enable/Disable Code 39 : Parameter # 0x00 83
5.3.2 Enable/Disable Trioptic Code 39 :
Parameter # 0x0D. 83
5.3.3 Convert Code 39 to Code 32 (Italian Pharma
Code) : Parameter # 0x56 83
5.3.4 Code 32 Prefix : Parameter # 0xE7 83
5.3.5 Set Lengths for Code 39 :
Parameter # L1 = 0x12, L2 = 0x13. 83
5.3.6 Code 39 Check Digit Verification :
Parameter # 0x30 84
5.3.7 Transmit Code 39 Check Digit :
Parameter # 0x2B. 84
5.3.8 Enable/Disable Code 39 Full ASCII :
Parameter # 0x11 84
5.4 Code 93. 85
5.4.1 Enable/Disable Code 93 : Parameter # 0x00 85
5.4.2 Set Lengths for Code 93 :
Parameter # L1 = 0x1A, L2 = 0x1B 85
5.5 Code 11. 85
5.5.1 Enable/Disable Code 11 : Parameter # 0x0A. 85
5.5.2 Set Lengths for Code 11 :
Parameter # L1 = 0x1C, L2 = 0x1D 85
5.5.3 Code 11 Check Digit Verification :
Parameter # 0x34 86
5.5.4 Transmit Code 11 Check Digits :
Parameter # 0x2F. 86
5.6 Interleaved 2 of 5. 86
5.6.1 Enable/Disable Interleaved 2 of 5 :
Parameter # 0x06 86
5.6.2 Set Lengths for Interleaved 2 of 5 :
Parameter # L1 = 0x16, L2 = 0x17 86
5.6.3 Interleaved 2 of 5 Check Digit Verification :
Parameter # 0x31 87
5.6.4 Transmit Interleaved 2 of 5 Check Digit :
Parameter # 0x2C 87
5.6.5 Convert Interleaved 2 of 5 to EAN-13 :
Parameter # 0x52 87
5.7 Discrete 2 of 5 88
5.7.1 Enable/Disable Discrete 2 of 5 : Parameter # 0x05 88
5.7.2 Set Lengths for Discrete 2 of 5 :
Parameter # L1 = 0x14, L2 = 0x15 88
5.8 Chinese 2 of 5 88
5.8.1 Enable/Disable Chinese 2 of 5 :
Parameter # 0xF0 0x98 88
5.9 Codabar 88
5.9.1 Enable/Disable Codabar :
Parameter # 0x07 88
5.9.2 Set Lengths for Codabar :
Parameter # L1 = 0x18, L2 = 0x19 89

5.9.3 CLSI Editing : Parameter # 0x36 89
5.9.4 NOTIS Editing : Parameter # 0x37 89
5.10 MSI 89
5.10.1 Enable/Disable MSI : Parameter # 0x0B 89
5.10.2 Set Lengths for MSI : Parameter # L1 = 0x1E, L2 = 0x1F 90
5.10.3 MSI Check Digits : Parameter # 0x32 90
5.10.4 Transmit MSI Check Digit : Parameter # 0x2E 90
5.10.5 MSI Check Digit Algorithm : Parameter # 0x33 90
5.11 RSS 91
5.11.1 Enable/Disable RSS-14 : Parameter # 0xF0 0x52 91
5.11.2 Enable/Disable RSS-Limited : Parameter # 0xF0 0x53 91
5.11.3 Enable/Disable RSS-Expanded : Parameter # 0xF0 0x54 91
5.12 Data Options 91
5.12.1 Transmit Code ID Character : Parameter # 0x2D 91
5.12.2 Prefix/Suffix Values : Parameter # P = 0x69, S1 = 0x68, S2 = 0x6A 92
5.12.3 Scan Data Transmission Format : Parameter # 0xEB 92
5.13 Serial Interface 93
5.13.1 Baud Rate : Parameter # 0x9C 93
5.13.2 Parity : Parameter # 0x9E 93
5.13.3 Software Handshaking : Parameter # 0x9F 93
5.13.4 Decode Data Packet Format : Parameter # 0xEE 94
5.13.5 Host Serial Response Time-out : Parameter # 0x9B . . . 94
5.13.6 Stop Bit Select : Parameter # 0x9D 94
5.13.7 Intercharacter Delay : Parameter # 0x6E 94
5.13.8 Host Character Time-out : Parameter # 0xEF 94
5.14 Event Reporting 95
5.14.1 Decode Event : Parameter # 0xF0 0x00 95
5.14.2 Boot Up Event : Parameter # 0xF0 0x02 95
5.14.3 Parameter Event : Parameter # 0xF0 0x03 95
5.15 Numeric Bar Codes 95
5.15.1 Cancel 95

6.0 Summit Radio 96

6.1 Summit Client Utility 96
6.1.1 Main Window 96
6.1.2 Profile Window 97
6.1.2.1 Radio Settings 98
6.1.2.2 Preferred Band for 802.11a/g Radio 98
6.1.2.3 Ad Hoc 98
6.1.2.4 Security Settings 99
6.1.2.5 Using Scan to Create a Profile 99
6.1.2.6 EAP Credentials 101
6.1.2.7 Encryption 102
6.1.2.7.1 Cisco TKIP 102
6.1.2.7.2 WPA Migration Mode and WPA2 Mixed Mode 102
6.1.2.8 ThirdPartyConfig 102
6.1.2.9 EAP-FAST 102
6.1.3 Status Window 102
6.1.4 Diags Window 103
6.1.5 Global Window 103
6.1.6 PMK Caching 106

7.0 BlueTooth 107

7.1 Introduction 107
7.1.1 Bluetooth Functions 107
7.1.2 Main Window 107
7.2 Basic Operations 108
7.2.1 Start BlueSoleil 108
7.2.2 Search for Other Bluetooth Enabled Devices 108
7.2.3 Establish Connection 108
7.2.3.1 Start the Service 108
7.2.3.2 Initiate the Connection 108
7.2.4 Bluetooth Security 109
7.3 Getting Started 109
7.3.1 AV Headphone 109
7.3.2 Basic Imaging 109
7.3.3 Dial-up Networking 109
7.3.4 FAX 110
7.3.5 File Transfer 110
7.3.5.1 Connect to a Mobile Phone 110
7.3.5.2 Share a Folder on Your Computer with other Bluetooth-Enabled Devices 110
7.3.5.3 Access a Shared Folder on Another Bluetooth Enabled Device 111
7.3.6 Headset 111
7.3.7 Human Interface Device 111
7.3.8 LAN Access 111
7.3.9 Object Push 112
7.3.9.1 Push Objects to a Bluetooth-Enabled Mobile Phone 112
7.3.9.2 Receive Objects from a Bluetooth Enabled Mobile Phone 112
7.3.10 Personal Area Networking 112
7.3.10.1 Connecting the PAN User (PANU) 113
7.3.10.2 Configuring the NAP/GN 113
7.3.11 Printer 113
7.3.12 Serial Port 114
7.3.13 Bluetooth Synchronization 114
7.4 BlueSoleil User Guides 115
7.4.1 BlueSoleil Environment 115
7.4.1.1 Main Window 115
7.4.1.1.1 Local Bluetooth Device 115
7.4.1.1.2 Remote Bluetooth Devices 115
7.4.1.1.3 Bluetooth Service Buttons of Remote Device 115
7.4.1.2 Service Window 115
7.4.1.3 Menus 116
7.4.2 Device Configurations 117
7.4.2.1 Hardware Configuration 117
7.4.2.2 Properties Configuration 117
7.4.3 Security Configuration 117
7.4.3.1 Pair / Un-pair Devices 117
7.4.3.1.1 How to pair with another device 117
7.4.3.1.2 How to un-pair with another device 117
7.4.3.2 General Security 117
7.4.3.2.1 Security Level 117
7.4.3.2.2 Bluetooth Passkey 118
7.4.3.2.3 Data Encryption 118
7.4.3.3 Managing Device Pairings 118
7.4.3.4 Local Services Security 118
7.4.3.4.1 Local Services: 118
Appendix A — EAP Types 119
Appendix B — Encryption Settings 121

1.0 Introduction

1.1 User and Product Safety

- Do not stare into the laser or LED beam directly or shine it into eyes.
- Never use strong pressure onto the screen or subject it to severe impact, as the LCD panel could become cracked and possibility cause personal injury. If the LCD panel is broken, never touch the liquid inside because the liquid irritates the skin.
- Although the PDT has passed the test of IP65 standard for water and dust resistance, avoid prolonged exposure to rain or other concentrated moisture. Such condition exceeds the IP65 standard, and could result in water or other contaminants entering into the PDT.
- Use only the original approved AC Adapter with the PDT. Use of an unapproved AC Adapter could result in electrical problems, or even cause a fire or electrical shock to the user.
- Do not disassemble the PDT. Servicing should be done by supplier only. If the PDT or accessories gets damaged due to wrong handling or unauthorized repair, warranty is void. In case the warranty seals are broken, warranty is void too.
- Make regularly back-up of all important data.
- Under no circumstance will supplier be liable for any direct, indirect, consequential or incidental damages baring out of the use or inability to use the hardware and software and/or any data loss, even if supplier has been informed about the possibility of such damages.
- LASER RADIATION: DO NOT STARE INTO BEAM CLASS 2 LASER PRODUCT.

1.2 LED and LASER Safety Information

- M9000 is a Class II LED/Laser Product.
- DO NOT STARE at the LED/Laser or shine into eyes.
- Do not allow young children to use the product without adult supervision.
- Do not replace/repair the LED/Laser; these are not user replaceable.
- Do not shine the LED/Laser on a shiny reflective surface.

– RADIATION EXPOSURE STATEMENT –

This equipment complies with FCC radiation exposure limits set forth for an uncontrolled environment. End users must follow the specific operating instructions for satisfying RF exposure compliance. To maintain compliance with FCC RF exposure compliance requirements, please follow operation instruction as documented in this manual.

This transmitter must not be co-located or operating in conjunction with any other antenna or transmitter.

The availability of some specific channels and/or operational frequency bands are country dependent and are firmware programmed at the factory to match the intended destination. The firmware setting is not accessible by the end user.

1.3 FCC Interference Statement

This equipment has been tested and found to comply with the limits for a Class B digital device, pursuant to Part 15 of the FCC Rules. These limits are designed to provide reasonable protection against harmful interference in a residential installation. This equipment generates uses and can radiate radio frequency energy and, if not installed and used in accordance with the instructions, may cause harmful interference to radio communications. However, there is no guarantee that interference will not occur in a particular installation. If this equipment does cause harmful interference to radio or television reception, which can be determined by turning the equipment off and on, the user is encouraged to try to correct the interference by one of the following measures:

- Reorient or relocate the receiving antenna.
- Increase the separation between the equipment and receiver.
- Connect the equipment into an outlet on a circuit different from that to which the receiver is connected.
- Consult the dealer or an experienced radio/TV technician for help.

FCC Caution: Any changes or modifications not expressly approved by the party responsible for compliance could void the user's authority to operate this equipment. This device complies with Part 15 of the FCC Rules. Operation is subject to the following two conditions: (1) This device may not cause harmful interference, and (2) this device must accept any interference received, including interference that may cause undesired operation.

Complies with 21 CFR 1040.10 and 1040.11 except for deviations pursuant to Laser Notice No. 50, dated June 24, 2007.

Specific Absorption Rate (SAR) Information

The SAR Limit of USA (FCC) is 1.6W/kg averaged over one gram of tissue. The device has been tested against this SAR limit. The highest SAR value reported under this standard during product certification for properly worn on the body is 1.37W/kg. This device was tested for typical body-worn operations with the back of the Tablet PC kept 0 cm from the body. Any Changes or modifications not expressly approved by the party responsible for compliance could void the user's authority to operate the equipment.

1.4 Industry Canada Statement

This Class B digital apparatus complies with Canadian ICES-003. Operation is subject to the following two conditions:

1. This device may not cause interference and
2. This device must accept any interference, including interference that may cause undesired operation of the device.

Le présent appareil est conforme aux CNR d'Industrie Canada applicables aux appareils radio exempts de licence. L'exploitation est autorisée aux deux conditions suivantes : (1) l'appareil ne doit pas produire de brouillage, et (2) l'utilisateur de l'appareil doit accepter tout brouillage radioélectrique subi, même si le brouillage est susceptible d'en compromettre le fonctionnement.

Cet appareil numérique de la classe [B] est conforme à la norme NMB-003 du Canada.

1.5 Battery Safety

– WARNING –

Risk of explosion if battery is replaced by an incorrect type. Dispose of used batteries according to the instructions.

Lithium-ion battery packs might get hot, explode, ignite and/or cause serious injury if exploded by abusive using. Please follow the safety warnings listed as below:

- Do not throw the battery pack in fire. Do not expose the battery to high temperatures.
- Do not connect the positive battery pack with negative battery pack to each other with any metal object (like wire).

- Do not carry or store battery pack together with metal objects.
- Do not pierce the battery pack with nails or drills, strike the battery pack with a hammer, step on the battery pack or otherwise expose it to strong impacts, shocks or excessive force.
- Do not solder onto the battery pack.
- Do not expose battery pack to liquid or allow the battery contacts to get wet.
- Do not disassemble or modify the battery pack. The battery pack contains safety and protection measures, which, if damaged, may cause the battery pack to generate heat, explode or ignite.
- Do not discharge the battery pack using any device except for the specified device. When it is used in devices other than the specified devices, the battery pack can be damaged or its life expectancy reduced. If the device causes any abnormal current to flow, it may cause the battery pack to become hot, explode or ignite and cause serious injury.
- In the event the battery pack leaks and the fluid gets into one's eye, do not rub the eye. Rinse well with water and immediately seek medical care. If left untreated, the battery fluid could cause damage to the eye.

1.6 Warranty Statements

DAP Technologies makes no representation or warranty with respect to the contents hereof and specifically disclaims any implied warranties of merchantability or fitness for any particular purpose.

The information in this manual is subject to change. DAP Technologies reserves the right to update and modify the M9000 Series, its accessories, and manuals without notice.

No part of this manual may be copied, distributed, transmitted, transcribed, stored in a retrieval system, or translkated in any form or by any means, whether electronically or manually, without the express written consent of DAP Technologies.

As manufacturer, DAP Technologies will replace or repair, at its discretion, any products that prove to be defective in either materials or workmanship, for a period of one year following the purchase date of the M9000 Series unit and for a period of ninety (90) days following the purchase date of the M9000 accessories sold by DAP Technologies. The warranty only covers the materials and workmanship.

This warranty does not cover damages caused by misuse, abuse, or neglect, or occurring during shipping or storage; the warranty does not also cover any modification or servicing by anyone other than a DAP Technologies Authorized Service Center.

DAP Technologies cannot be held responsible for any damage caused by the misuse fo the M9000 Series unit or by any other software or hardware added to the M9000.

The operating system, MS-DOS®, Windows CE, and all other software sold or supplied by DAP Technologies are provided as is, without any warranty, either express or implied.

In no event shall DAP Technologies be liable for any direct damage, indirect damage, or damage of any kind, including but not limited to damages on account of the loss of present or prospective profits arising out of or in connection with the use or failure of performance of this product. No claim may be made against DAP Technologies under this head, whether arising from contractual, extra-contractual, or statutory liability.

The warranty allowed hereby excludes all other legal warranties related to the quality of this product or its capacities to fulfill specific purposes, including all warranties granted by the United States Convention on Contracts for the International Sale of Goods, the applciation of such Convention being expressly excluded.

M9000 Series is a registered trademark of DAP Technologies. Microsoft and MS-DOS® are registered trademarks of Microsoft Corporation.

1.7 Warranty and After Service

Should this Device be malfunctioned, please contact the original retailer providing information about the product name, the serial number, and the details about the problem.

1.8 Europe – EU Declaration of Conformity

This device complies with the essential requirements of the R&TTE Directive 1999/5/EC. The following test methods have been applied in order to prove presumption of conformity with the essential requirements of the R&TTE Directive 1999/5/EC:

- EN 60950-1: 2006 — Safety of Information Technology Equipment
- EN50371 : (2002-03) — Generic standard to demonstrate the compliance of low power electronic and electrical apparatus with the basic restrictions related to human exposure to electromagnetic fields (10 MHz - 300 GHz) -- General public
- EN 300 440-1 V1.4.1: (2008-05) — Electromagnetic compatibility and Radio spectrum Matters (ERM); Short range devices; Radio equipment to be used in the 1 GHz to 40 GHz frequency range; Part1: Technical characteristics and test methods
- EN 300 440-2 V1.2.1: (2008-05) — Electromagnetic compatibility and radio spectrum matters (ERM); Wireless microphones in the 25 MHz to 3 GHz frequency range;
- EN 301 908-1 V3.2.1: (2007-05) — Electromagnetic compatibility and Radio spectrum Matters (ERM); Base Stations (BS), Repeaters and User Equipment (UE) for IMT-2000 Third-Generation cellular networks; Part 1: Harmonized EN for IMT-2000, introduction and common requirements, covering essential requirements of article 3.2 of the R&TTE Directive
- EN 301 489-1 V1.8.1: (2008-04) — Electromagnetic compatibility and Radio Spectrum Matters (ERM); ElectroMagnetic Compatibility (EMC) standard for radio equipment and services; Part 1: Common technical requirements
- EN 301 489-3 V1.4.1 (2002-08) — Electromagnetic compatibility and Radio Spectrum Matters (ERM); ElectroMagnetic Compatibility (EMC) standard for radio equipment and services; Part 3: Specific conditions for Short-Range Devices (SRD) operating on frequencies between 9 kHz and 40 GHz
- EN 301 489-7 V1.3.1 (2005-11) — Electromagnetic compatibility and Radio spectrum Matters -(ERM); ElectroMagnetic Compatibility (EMC) standard for radio equipment and services; Part 7: Specific conditions for mobile and portable radio and ancillary equipment of digital cellular radio telecommunications systems (GSM and DCS)
- EN 301 489-17 V1.3.2 (2007-06) — Electromagnetic compatibility and Radio spectrum Matters (ERM); ElectroMagnetic Compatibility (EMC) standard for radio equipment; Part 17: Specific conditions for 2,4 GHz wide-band transmission systems, 5 GHz high performance RLAN equipment and 5,8 GHz broadband data transmitting systems
- EN 301 489-19 V1.2.1 (2002-11) — Electromagnetic compatibility and Radio spectrum Matters (ERM); ElectroMagnetic Compatibility (EMC) standard for radio equipment and services; Part 19: Specific conditions for Receive-Only Mobile Earth Stations (ROMES)

operating in the 1,5 GHz band providing data communication

- EN 301 489-24 V1.5.1 (2010-10) — Electromagnetic compatibility and Radio spectrum Matters (ERM); ElectroMagnetic Compatibility (EMC) standard for radio equipment and services; Part 24: Specific conditions for IMT-2000 CDMA Direct Spread (UTRA and E-UTRA) for Mobile and portable (UE) radio and ancillary equipment
- EN 301 489-33 V1.1.1 (2009-02) — Electromagnetic compatibility and Radio spectrum Matters (ERM); ElectroMagnetic Compatibility (EMC) standard for radio equipment and services; Part 33: Specific conditions for Ultra-Wide-Band (UWB) communications devices
- EN 302 065 V1.2.1 (2010-07) — Electromagnetic compatibility and Radio spectrum Matters (ERM); Short-Range Devices (SRD) using Ultra- Wide-Band technology (UWB) for communications purposes; Harmonised EN covering the essential requirements of Article 3.2 of the R&TTE Directive
- EN 301 511 V9.0.2 (2003-3) — Global System for Mobile communications (GSM); Harmonised EN for mobile stations in the GSM 900 and GSM 1800 bands covering essential requirements under Article 3.2 of the R&TTE Directive (1999/5/EC)
- EN 301 893 V1.5.1 (2008-12) — Broadband Radio Access Networks (BRAN); 5 GHz high performance RLAN; Harmonised EN covering the essential requirements of Article 3.2 of the R&TTE Directive
- EN 300 328 V1.7.1 (2006-02) — Electromagnetic compatibility and Radio spectrum Matters (ERM); Wide-band transmission systems; Data transmission equipment operating in the 2,4 GHz ISM band and using wide-band modulation techniques; Harmonised EN covering essential requirements under Article 3.2 of the R&TTE Directive
- EN 62311:2008 — Assessment of electronic and electrical equipment related to human exposure restrictions for electromagnetic fields (0 Hz-300 GHz)
- EN 55022:2006/A1:2007 — Information technology equipment — Radio disturbance characteristics — Limits and methods of measurement
- EN 55024:1998/A2:2003 — Information technology equipment — Immunity characteristics — Limits and methods of measurement

1.9 European Union CE Marking and Compliance Notices

Statements of Compliance:

English — This product follows the provisions of the European Directive 1999/5/EC.
Danish — Dette produkt er i overensstemmelse med det europæiske direktiv 1999/5/EC.
Dutch — Dit product is in navolging van de bepalingen van Europees Directief 1999/5/EC.
Finnish — Tämä tuote noudattaa EU-direktiivin 1999/5/EC määräyksiä.
French — Ce produit est conforme aux exigences de la Directive Européenne 1999/5/EC.
German — Dieses Produkt entspricht den Bestimmungen der Europäischen Richtlinie 1999/5/EC.
Greek — Το προϊόν αυτό πληροί τις προβλέψεις της Ευρωπαϊκής Οδηγίας 1999/5/EC.
Spanish — Este producto cumple las disposiciones de la Directiva Europea 1999/5/CE.

1.0 Introduction

1.10 Specifications

Operating System	Windows® Embedded Standard 7, Windows® CE 6.0 Professional
Processor	Intel® Atom™ E660T 1.3 GHz
Memory	1 GB DDR2 SDRAM (2 GB optional)
Storage	16 GB solid state drive (32 or 64 GB optional)
Display	Sunlight-viewable Hardened touchscreen Landscape or portrait orientation Passive stylus or finger operation 7-inch WVGA (800 x 480) 550 nits
Sensors	Light sensor for auto backlight adjustment Position sensor (accelerometer) for portrait or landscape screen orientation
Keypad / Buttons	3-key keypad (enter, navigation, function) 7 programmable keys (touchscreen) Adjustable keypad backlight Programmable trigger on underside
Communications	WLAN — Summit 802.11 a/b/g/n WWAN — Gobi™ 3000: (CDMA, EVDO, UMTS, GSM, GPRS, EDGE, DTM, HSPA, 3G: 14.4 / 5.76 Mbps, DOrA: 3.1 /1.8 Mbps) GPS — Gobi™ 3000 (Standalone, XTRA, AGPS) Zigbee® — Building Automation (BA) Home Automation (HA) Smart Energy (SE) Wireless USB — Video/data Bluetooth® — v2.1 + EDR Class II (BlueSoleil stack)
Input / Output	Power jack 1x RS-232 1x USB 2.0 **Via dock connector:** 1x USB 2.0 1x Ethernet
Barcode Scanning	Short range barcode: 1D laser Camera: 5-MP color camera with flash
Expansion Slots	SD card slot (supports up to 32 GB) **Multi-I/O interface:** 2x USB 2.0 1x CAN bus 2.0 (interface only) 1x SDVO (Serial Digital Video Out) 2x RS-232
Audio	Speaker Intel® HD Audio 3.2 mm stereo headset jack
Software	Windows® Embedded 7: IE8, IIS 7.0, .NET 3.5, Remote Desktop, SQL, Backup and Restore, Boot from VHD or USB, Power Management, EWF and FBWF Windows® CE 6.0 Professional: ActiveSync, FTP client/server, IE 6.0, Viewers for Microsoft® Office and PDF files, Inbox, Windows Media Player, Remote Desktop, Terminal Services ,Voice Recorder, Backup and Restore, Barcode Scanner Utility

Power	**Primary internal:** Li-ion battery, 7.4 V, 3000 mAh **Secondary battery:** Li-ion battery pack, 7.4 V, 3000 mAh **Input:** 10–20 VDC, 2 A
Dimensions & Weight	9.0 (L) x 7.3 (W) x 2.3 (H) inches [230 x 185 x 60 mm] 2.96 lb. [1346 g]
Regulatory	FCC Class B CE RoHS WEEE **Laser safety:** A21CFR1040.10 IEC/EN 60825-1
Environment	**Operating temperature:** -4 to +122 °F [-20 to +50 °C] **Charging temperature:** 32 to +104 °F [0 to +40 °C] **Storage temperature:** -22 to +158 °F [-30 to +70 °C] **Drop:** Multiple 6-foot (1.8-meter) drops to concrete **ESD:** 15 kV air discharge, 8 kV direct discharge **Sealing:** IP67 certified **Humidity:** 5%-95%, non-condensing **Vibration:** MIL-STD-810F

2.0 Getting Started

2.1 What's In the Package

M9010

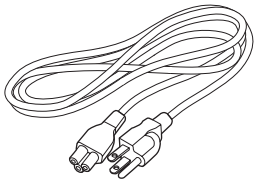

Power Cords (US, UK, and EU)

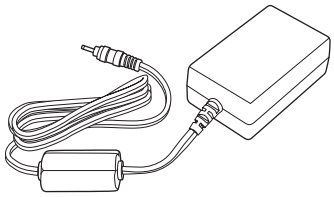

AC Adapter

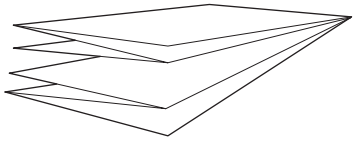

Quick Start Guide

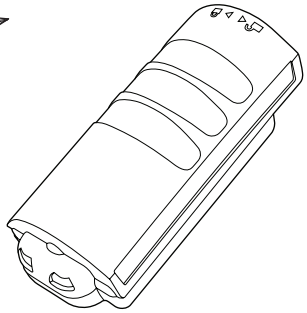

Battery Pack

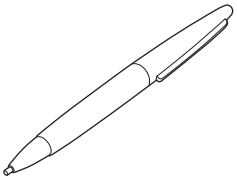

Stylus

2.2 Installing Optional Memory Cards

1. Using a flathead screwdriver, remove the screws as shown.

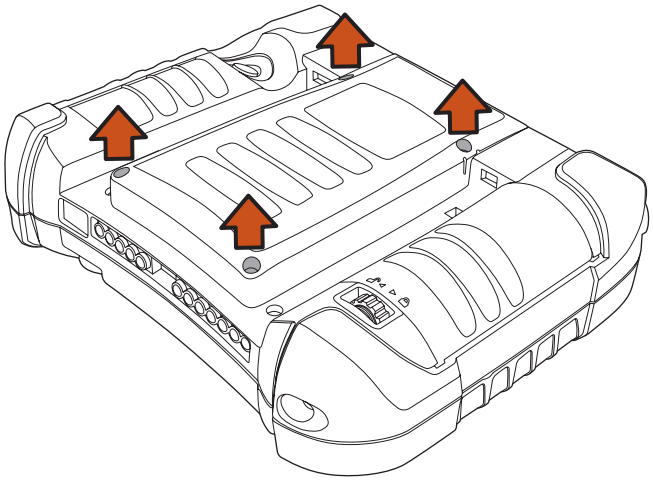

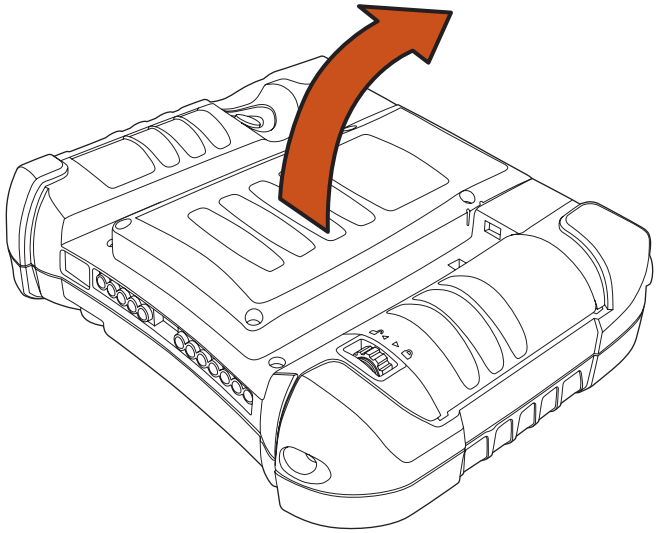

2. Lift the back cover off.
3. Insert the SIM Card into the small slot.

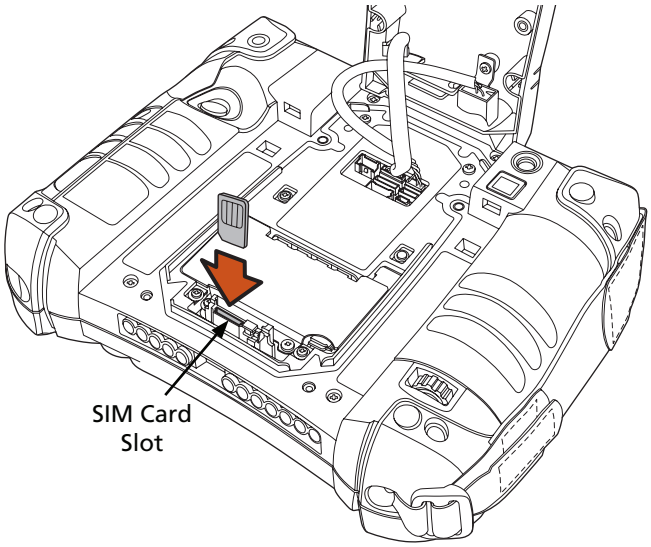

4. Insert the SD Card into the slot and press in until it locks in place.

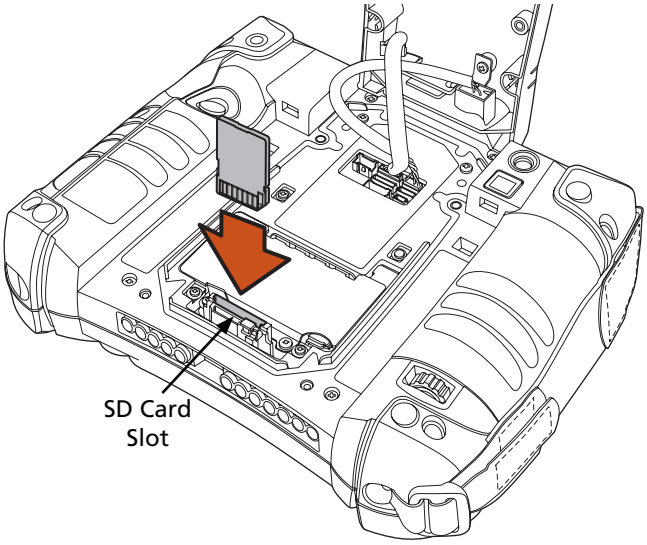

5. Place the cover back on the unit.

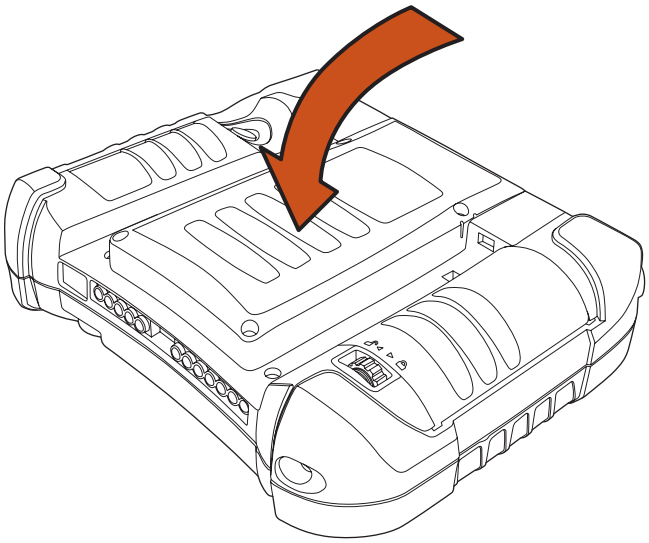

6. Insert the screws into their holes and tighten using a flathead screw-driver.

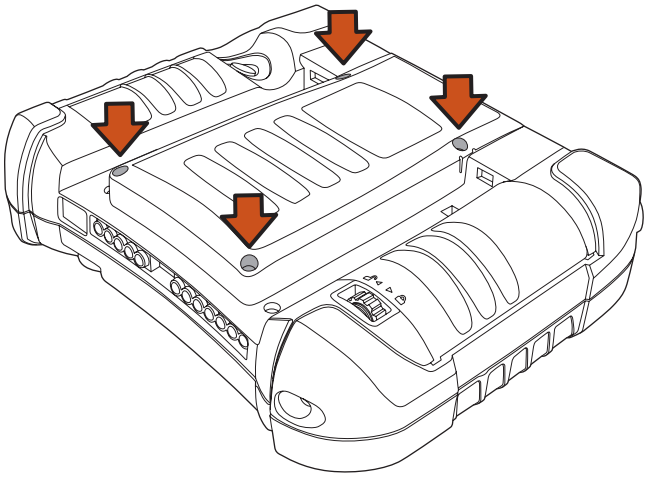

2.3 Install the Battery

1. Insert the battery as shown to the right.

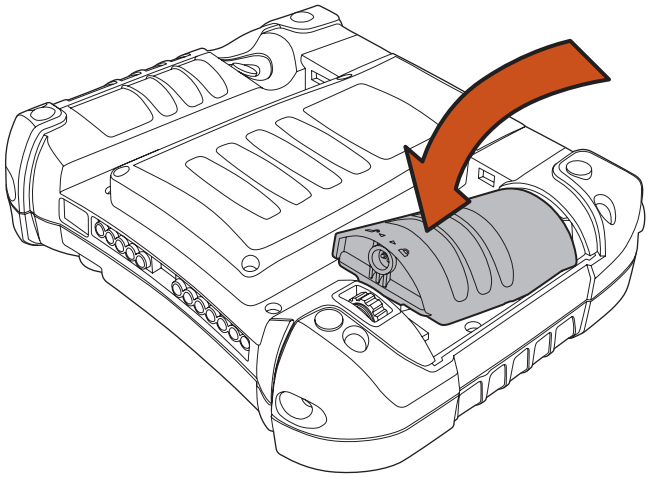

2. Turn the battery lock wheel clockwise until the battery is locked in place.

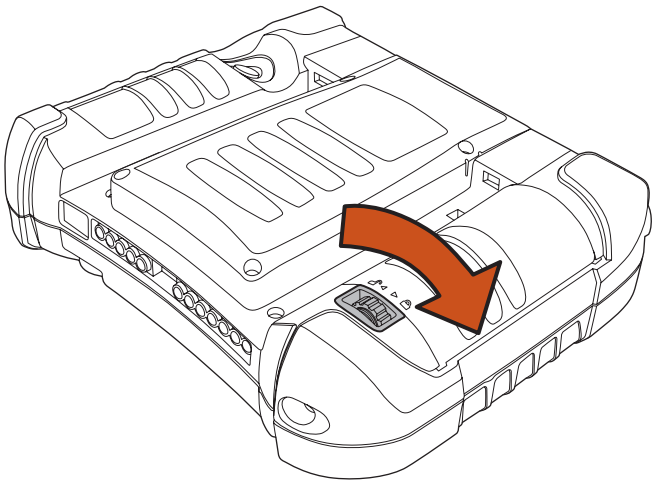

– WARNING –

If the battery is not properly locked into position, the unit **WILL NOT** start.

2.4 Charge the Battery

2.4.1 Plugging In

1. Insert the AC adapter into the power input.

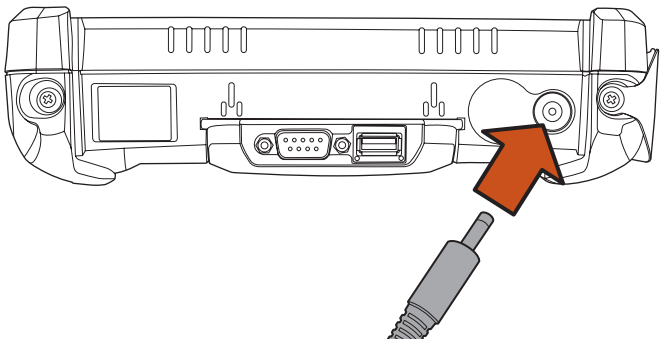

2. Insert the power cord into the wall outlet and charge the battery for a minimum of 6 hours.

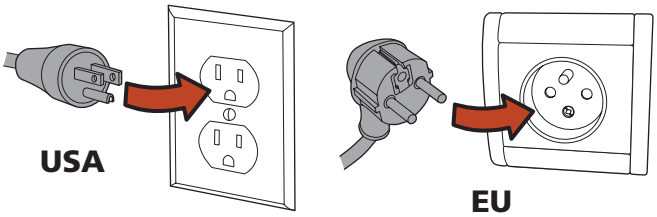

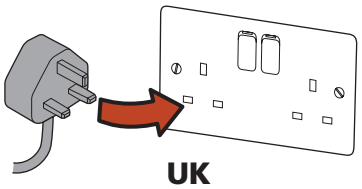

3. A red light will appear on the front of the unit while the unit is charging. It will turn green when charging is complete.

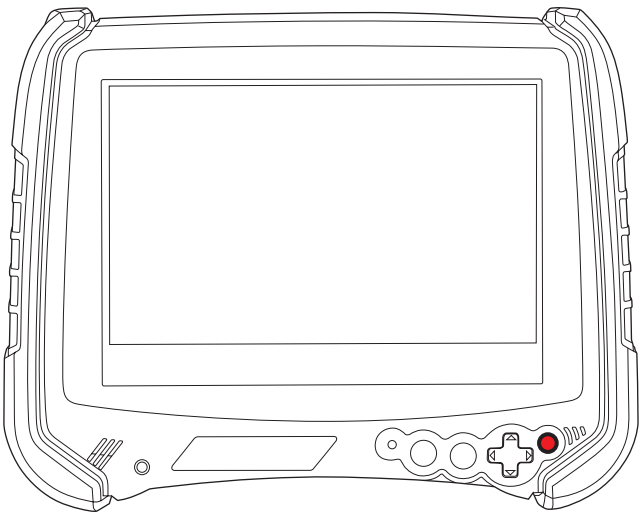

2.4.2 LED Indicators

Red LED

Indicates that batteries are charging.

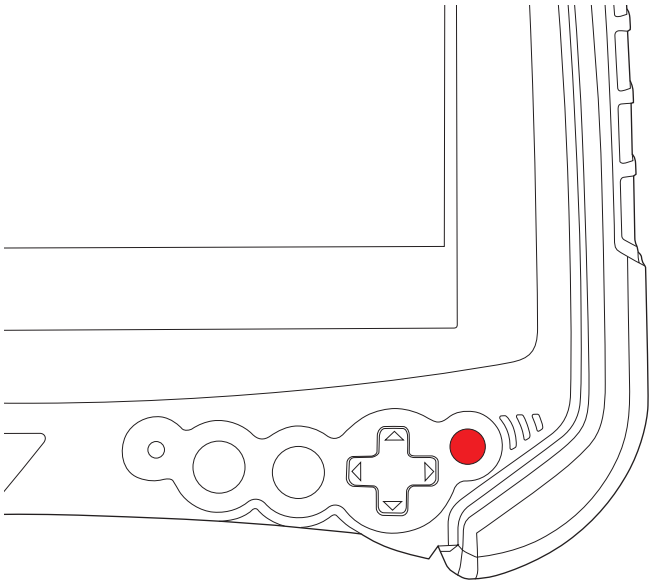

Flashing Green LED

Idicates that unit is booting, resuming, or hibernating.

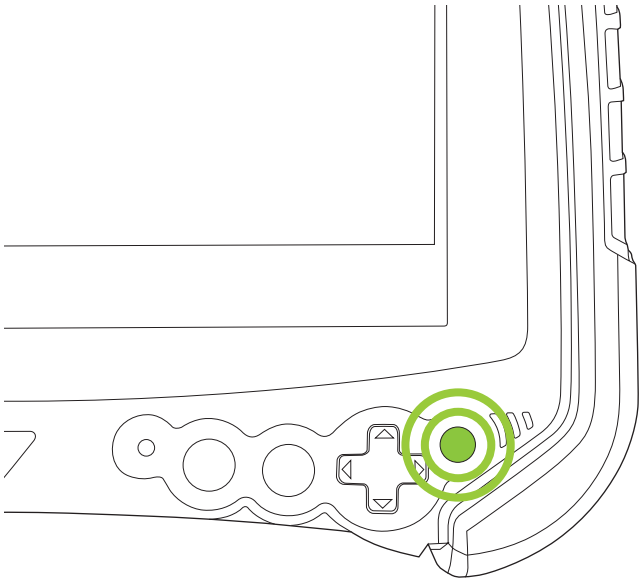

Green LED

Indicates that batteries are charged

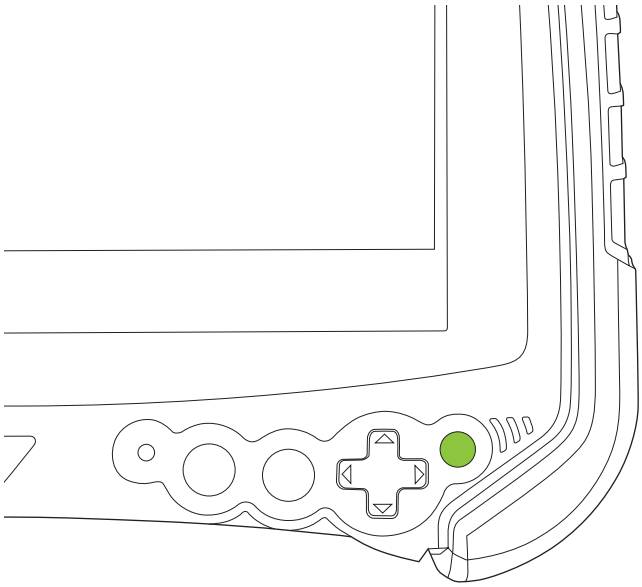

Yellow LED

Indicates a battery error, including a missing one.

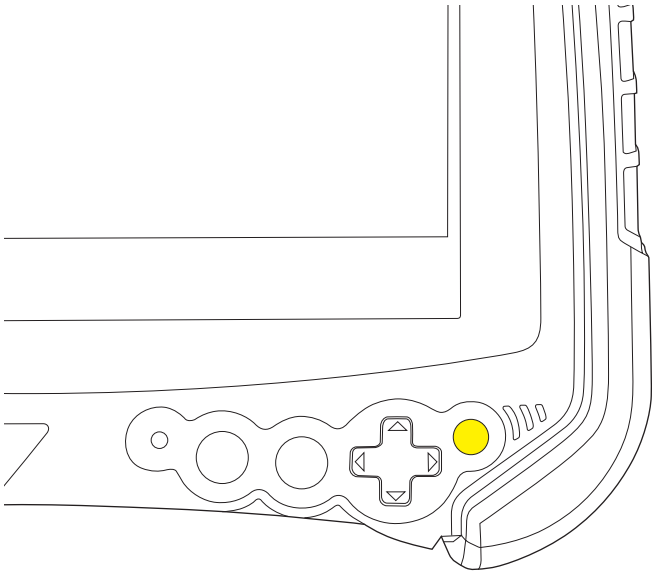

2.5 Operating the Unit

2.5.1 Turning the Unit On

1. Once the unit is charged, turn the unit on by pressing and releasing the trigger on the back of the unit.

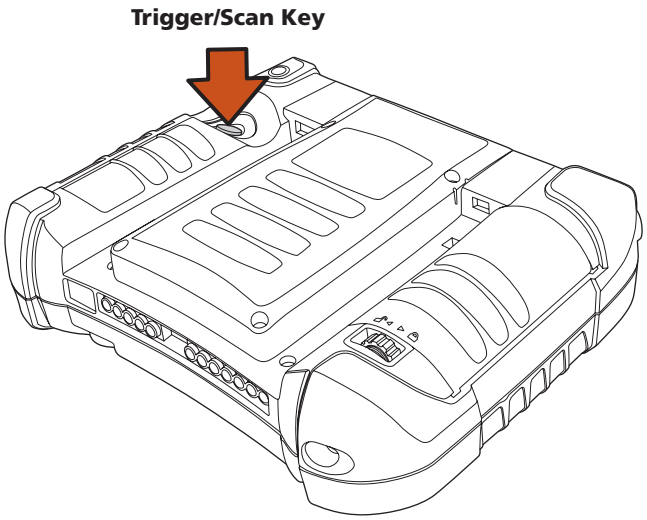

2. A DAP splash screen will appear while the OS is loading.

3. Once the OS has loaded, the desktop will appear.
4. The unit is ready for use.

2.5.2 Calibrating the Touchscreen

The touchscreen comes pre-calibrated from the factory; however, if the screen ever needs to be re-calibrated, perform the following:

1. Open the **Start Menu** and tap on **Control Panel**.

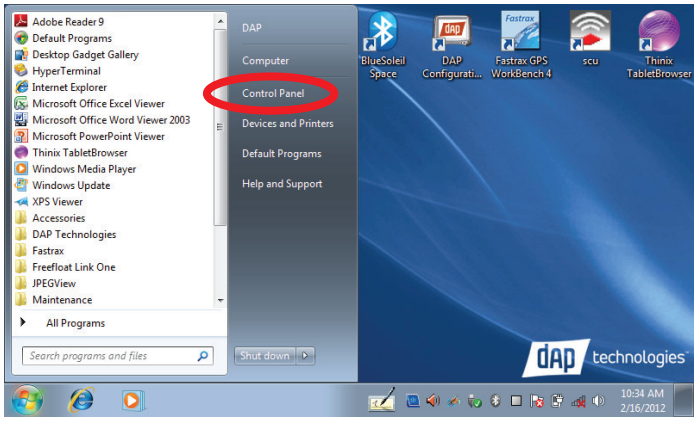

2. A window entitled **Adjust Your Computer's Settings** will open.

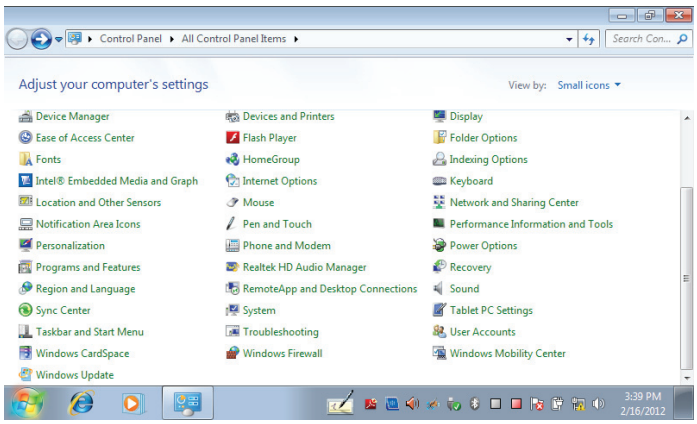

3. Tap the **Tablet PC Settings** icon.

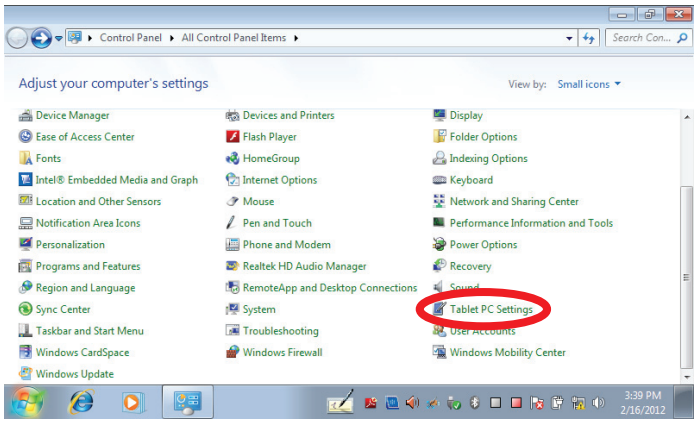

4. The **Tablet PC Settings** window will open.

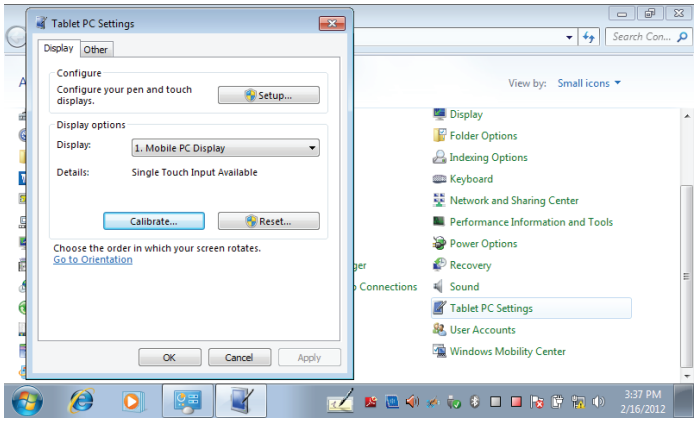

5. Tap the **Calibrate** button.

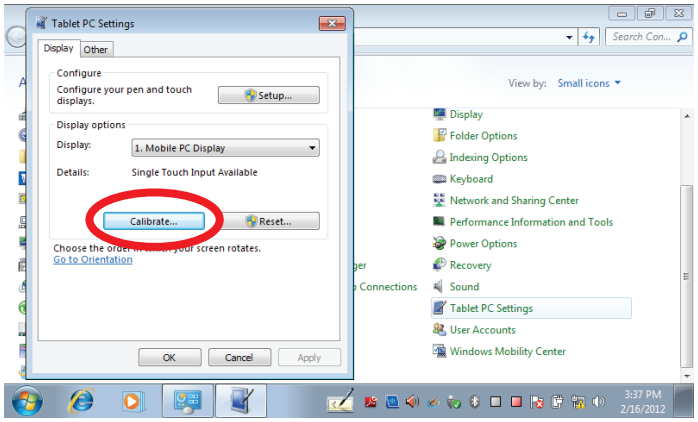

6. The Calibration window will open.

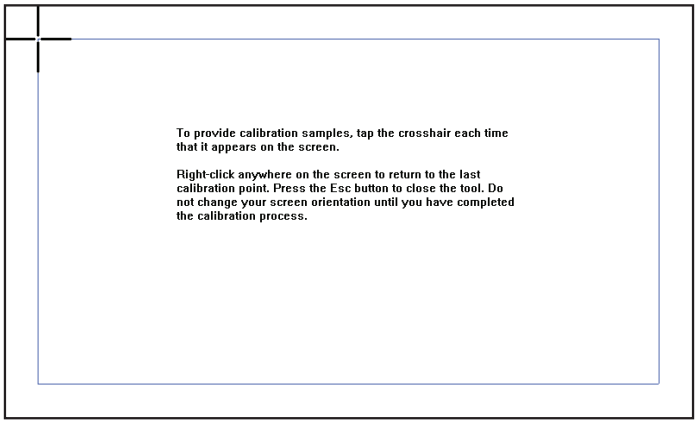

7. Follow the onscreen instructions and the Digitizer Calibration Tool window will open asking to save the calibration data.

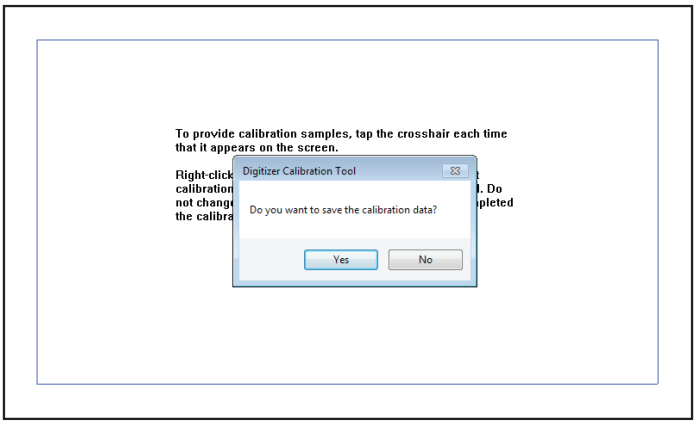

8. If the calibration was satisfactory, tap the **Yes** button.

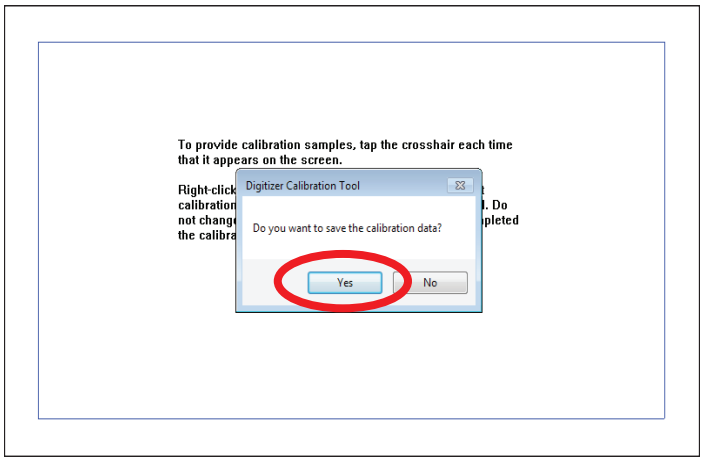

8. The screen will return to the **Tablet PC Settings** window.

2.5.3 Launching an Application

2.5.3.1 Using the Stylus

1. Touch the Start Menu Icon or Start Menu Button with a finger or the stylus.
2. When the Start aMenu appears, select an item to launch or navigate with using a finger or stylus.

2.5.3.2 Using the Nav Button

1. Touch the Start Menu Icon or Start Menu Button with a finger or a stylus.
2. Once the Start Menu appears, use the Nav Button to scroll the list of items.
3. To select a sub-menu, press the right side of the Nav Button. Pressing the left side of the Nav Button while in a sub-menu will take you to the previous menu.
4. Once an item to be selected is highlighted, press the Enter Button to launch the item.

2.5.4 Entering Data

1. Attach a keyboard to the USB connector on the top of the unit.

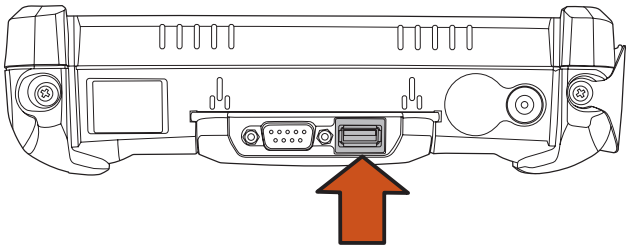

– OR –

2. Tap the **Tablet PC Input Panel** icon in the task bar at the bottom of the screen and the **Onscreen Keyboard** will appear:

4. To close the Onscreen Keyboard, tap either the X or the **Tablet PC Input Panel** icon a second time.

5. If the unit is rotated, the screen will go dark, then re-orient the desktop in the following manner:

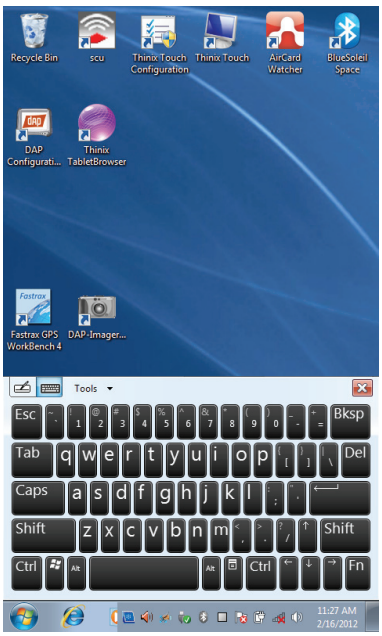

2.5.5 Using the Function Button

2.5.5.1 Function Button Key Combinations

This unit provides certain commands through function button combinations. The combinations listed below provide access to the specific options listed below:

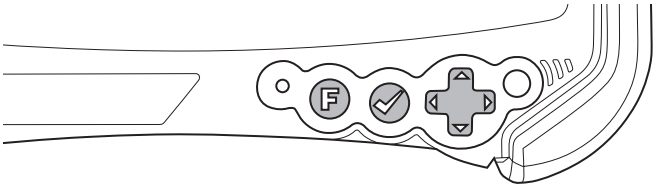

Shutdown: F + ✓ + ✚

(Hold until screen shuts off)

Reset: F + ✓ + ✚

Brightness: F + ✚

Tab: F + ✚

Space: F + ✚

2.5.5.2 Function Button with Function Keys

Each Function Key has two states. The first is its programmable function. The second is indicated by an icon representing its function and is activated as shown below:

Sleep: F + ☾

Product Site: F + F1

Battery Status: F + F2

Volume: F + F3

Radio Mgmt: F + F4

Camera: F + F5

GPS: F + F6