ENGLISH

User's Manual

ENGLISH

Table of Contents

CHAPTER 1
GETTING STARTED 1
Getting Started 2
Inventory 3
Safety and Maintenance 4
Checklists 5
Features 6
Where to Look For Information 7
Quick Start 8
Loading Windows 9
Adjusting the Volume 10
Adjusting the Brightness 10
Turning off Your Computer 11
Making a Startup Disk 11
Tips for New Owners 12

CHAPTER 2
GETTING STARTED 15
Hardware and Software 16
Front View 17
Left View 18
Right View 19
Bottom View 20
LED Status Indicators 21
Power Indicators 22
Function Keys 22
Numeric Keypad 22
Touchpad 23
The DVD-ROM, or COMBO Drive 24
Connecting the Printer 26
The PC Card Slot 26
Memory 27
The Graphics System 29
Communication Components 33
Built-in Wireless Local Area Network 34

ENGLISH

CHAPTER 3
MAKING CONNECTIONS 35
Making Connections 36
Left Side Connectors 36
Right Side Connectors 37
Front Side Connectors 38
CHAPTER 4
SYSTEM SOFTWARE 39
System Software 40
System Recovery 41
CHAPTER 5
POWER MANAGEMENT 45
Power Management 46
Power Saving Modes 48
Power Saving Tips 49
When to Replace the Battery 50
Heat Considerations 51
CHAPTER 6
USING THE BIOS SETUP UTILITY 53
Using the BIOS Setup Utility 54
Navigating and Entering Information in BIOS 55
The Main Menu 56
Advanced Menu 57
Boot menu 58
Security menu 59
Exit menu 60
Change User Password 61
Change Supervisor Password 61
CMOS Optimal Defaults 61
Exiting and Saving 61
APPENDIX A
FREQUENTLY ASKED QUESTIONS 63
Frequently Asked Questions 64
APPENDIX B
STATEMENTS 67
Statements 68
European Notice 70

ENGLISH

UL CAUTION 70
Canadian Department of Communications 72
Battery Disposal 73
CAUTION FOR ADAPTER 73
BATTERY CAUTION 73
CLASS 1 LASER PRODUCT 73

ENGLISH

Chapter 1

Introduction

ENGLISH

Getting Started

Congratulations on your purchase of the Notebook computer! Your new notebook features the most innovative advances in portable computing technology. It combines state-of-the-art ergonomics with sophisticated architecture to provide you with a personal computer that is compact, powerful, and easy to use. Designed for a wide range of general, business, and personal productivity applications, the notebook is an ideal choice for use in the office, at home, and on the road.

For maximum expandability without compromising portability, the notebook accommodates a number of modules, including DVD-ROM/Combo Drive, three USB ports, one PCMCIA card slot. The high capacity hard disk drive provides you with plenty of storage space for multimedia files and applications.

This Manual contains all the information you need to set up and use your new notebook. It describes all the features of the notebook in an easy-to-read yet thorough manner.

Inventory

This computer system is designed for years of productive and pleasurable computing. Use this section to keep details of your purchase. This information will be required should you need to make repairs to your notebook during the warranty period. Update this section when you add new options.

DATE OF PURCHASE: _____

PLACE OF PURCHASE: _____

DEALER'S NAME: _____

DEALER'S ADDRESS: _____

TELEPHONE: _____

E-MAIL ADDRESS/WWW: _____

CONTACT PERSON: _____

MODEL NUMBER: _____

SERIAL NUMBER: _____

BIOS VERSION: _____

The serial number is on the label (with a bar code) on the bottom side of the computer. The BIOS revision number will appear briefly on the screen after turning on the computer, before the graphic BIOS screen appears. Press the Del key to enter BIOS setup screen.

Safety and Maintenance

You can use your computer under a wide range of environmental conditions. However, to ensure long use and continued high performance, consider the following factors when setting up your computer:

- Follow all warnings and instructions noted in this documentation and in the Windows Help program.
- The first time you use your computer, we recommend that you carefully read the Making Connections section of this manual and initialize the battery to ensure optimum battery performance.
- Unplug the computer from the power outlet before cleaning. Use a damp cloth for cleaning. Do not use aerosols, solvents, or strong detergents.
- Do not use the computer near open water or other liquids. Never spill liquid onto the computer.
- Do not place the computer in an unstable location where it might slip or be knocked over. Serious damage could result from a fall.
- Slots and openings in the system cabinet are for ventilation purposes. Do not block or cover these openings or the system could overheat. Do not use or store the computer near a source of heat or dust.
- On the base or rear panel of this notebook, there is a label with information on the power requirements of this system. These requirements must be followed. If you are unsure of your local power supply, consult your dealer or local Power Company.
- Do not step on or place anything on the power cord.
- If you use the computer with an extension cord, ensure that the total ampere ratings of all the devices sharing the extension do not exceed the rating of the extension cord or the rating of the wall outlet.
- Never push foreign objects into the computer through any of the slots or openings. Dangerous voltages are present, which could cause electric shock or fire, or damage sensitive components.
- For best results, use a power strip with a built-in surge protector. Do not use inferior extension cords as this may result in damage to your computer.

- Set the computer on a flat, stable surface. To prevent damage to the computer's hard disk drive, avoid using the computer where it will be exposed to strong vibration.

Checklists

After opening the package, carefully inspect the contents. If any of the items is missing or appear damaged, contact your dealer. The shipping carton should contain the following:

STANDARD

- A notebook computer with a hard disk drive
- An internal battery
- A DVD-ROM or COMBO drive
- An AC adapter with power cord
- User's Manual
- System software CD

OPTIONS

The following items are normally optional, but some vendors may include them in the standard package. Some items may not be available in some countries, or some vendors may choose not to carry all the items.

- 256 MB or 512 MB SODIMM memory cards
- A Carry bag

ENGLISH

Caution: When purchasing any of the accessories listed above, purchase only those accessories that are approved for use with your computer. The above accessories are proprietary items. Your system vendor can obtain these approved accessories. If you use items that are not approved for use with this computer, you may cause your computer to malfunction, or to emit or receive electro-magnetic radiation in excess of local regulations. For non-proprietary accessories such as PC cards or printers, ensure that the accessory functions properly in your computer before making the purchase. Your system vendor may be able to recommend reliable brands and models.

Features

High Capacity Hard Disk Drive

The computer has a high capacity hard disk drive, to store your favorite programs and large multimedia files.

Built-in Modem/LAN Capability

A built-in 56k modem and 10/100 Mbps Ethernet port allows you to access the Internet or a local area network (LAN).

LCD

Your computer has an easy-to-view XGA LCD panel.

Built-in Stereo Speakers

The stereo speakers enable you to run a variety of multimedia applications.

Convenient Audio Control

The conveniently located audio control knob enable you to easily adjust the volume to the stereo speakers.

Launch Keys and Function Keys

Four Internet launch keys give you quick access to e-mail and the Internet. Function keys give you easy control of power management and your monitor.

Scrolling Button

Comfortably scroll through documents with the ergonomically designed scrolling button.

Where to Look For Information

About Your Computer

This User's Manual describes the key elements of your computer. New users can find a simple step-by-step orientation in the Quick Start section of this chapter.

About Windows

Windows Online Help, found on the Start menu, offers extensive Windows assistance. **Tour Windows XP** offers an online orientation for new Windows users. Find it in:

Start/Programs/Accessories/System Tools.

ENGLISH

Quick Start

Turning on the Computer for the First Time

1. Connect the AC adapter power cord to the AC adapter.
2. Connect the AC adapter to the DC power port on the right side of your computer.
3. Connect the AC adapter power cord to an AC outlet.
4. Slide the cover latch in the direction of the arrows to open the LCD.
5. Open the LCD panel to a comfortable viewing angle.
6. Press the power button to turn on the power.

Note: The battery is not fully charged. Allow your battery to fully charge before using it (i.e., before disconnecting AC power). Calibrating the battery before use is also highly recommended. Refer to Chapter 5, *Power Management*, for further information.

Use the touchpad to move the cursor on the screen. Move your finger across the pad to control the cursor, and press the right and left buttons beneath with your thumb. These buttons have the same functions as the right and left buttons of a standard mouse. You can also click or double-click by tapping on the touchpad. The middle button can be used to scroll up and down in documents and Web pages.

Loading Windows

The following section is for installing the Windows operating system only. If you are installing a different operating system, please check with your vendor for installation details.

Your computer will begin loading Windows once you turn on the power. Wait a few seconds for Windows setup to load. The Windows setup will prompt you for the product key number, shown to the right:

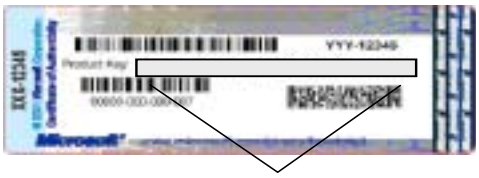

Note: The product key is on a sticker attached to the bottom of the Notebook.

1. Type your name, and, if applicable, the name of your company.
2. Read the End User's License Agreement. Click **Next** to accept it.
3. Enter the product key number. You can find this on the Certificate of Authenticity on a sticker attached to the computer. Click **Finish**.
4. The Start Wizard will prompt you to set the date, and your local time.

After the Start Wizard updates your system settings, the Welcome to Windows screen will appear. You may disable this feature by clearing the check box labeled **show this screen each time Windows starts**.

Some software comes preloaded with Windows. New users can familiarize themselves with this software by selecting Programs from the start menu, then clicking on programs to run them.

ENGLISH

Adjusting the Volume

You can adjust the volume with the volume control knob located below the touchpad.

Volume control button

Alternatively, you can adjust the volume with the Windows volume control applet located on the taskbar.

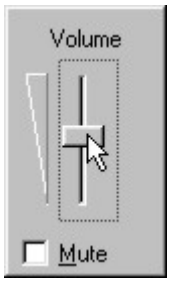

Adjusting the Brightness

Use the following hot key combinations to adjust the LCD panel brightness:

- Fn + F6 decreases the brightness
- Fn + F7 increases the brightness

Turning off Your Computer

Turning off the computer properly is important to maintaining your computer.

1. On the Start menu, click **Shut Down**.
2. Click the radio button next to **Shut Down** in the Shut Down Windows screen, and then click **OK**.

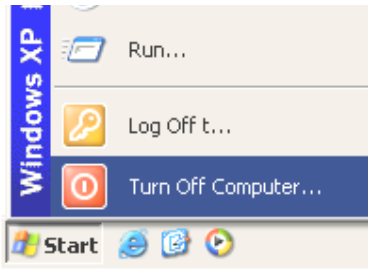

If you are going to be away from the computer for a short period, there are ways of conserving power without shutting down the system. See Chapter 5, *Power Saving Modes*, for details.

Warning: Shutting off the computer improperly may result in data loss.

Making a Startup Disk

If you have trouble starting Windows, the startup disk can be used to start your computer and fix many problems. Refer to the Windows user manual for instructions.

Tips for New Owners

Take responsibility for backup

Back up files often. Users who need to manage large amounts of data may wish to use backup devices such USB drive. If you use your notebook as a networked workstation with system backup, talk to the system administrator about backup procedures for your notebook.

Don't leave passwords anywhere on your notebook or carrying case

Be careful when placing your notebook on an airport security conveyor belt

In most airports, security conveyor belts are safe for computers. If you are not sure, ask the security staff. You should keep a close eye on your computer. When you are in a hurry, make sure that you walk away with the correct notebook computer!

Tape your business card to the notebook and accessories

In the workplace, notebooks and accessories may often look exactly alike, leading to equipment mix-ups. Prevent such mix-ups by placing your name on your equipment.

Develop ergonomic work habits

The science of ergonomics studies the relationship between health and a suitable work environment. For more information on ergonomics, contact your nearest computer bookstore, or local library. The Internet also has information on this and other related subjects.

Never take the notebook anywhere without the carrying case

A broken screen or case can be costly to repair. Prevent accidents by carrying the computer in a suitable carrying case.

Consider using a lock

For added security, consider purchasing a Kensington lock to put into the Kensington lock hole on the left side of your computer (see Chapter 2, *Left View*). Use the Kensington lock to secure the computer to a desk or table.

Note: Using a computer for extended periods of time with a poor workstation setup and incorrect work habits can cause health problems.

ENGLISH

Chapter 2

Getting Started

ENGLISH

Hardware and Software

This chapter introduces the different components and controls of your notebook computer, including the hardware components, the software, and the audio and video systems.

Getting Started

Before you begin using your computer, read this chapter to familiarize yourself with the main components installed in the system.

Slide the screen latch on the front edge of the cabinet towards the right to release the cover latch and open up the computer.

Front View

1. **LCD release latch**
2. **LCD panel**
3. **Battery**
4. **Keyboard**
5. **Speakers**
6. **Touchpad**
7. **Touchpad buttons**
8. **Scrolling button**
9. **Volume control knob**
10. **Microphone-in jack**
11. **Audio-out jack for external speakers or headphones**
12. **Power indicators**
13. **Status indicators**
14. **Power button**
15. **WLAN button**

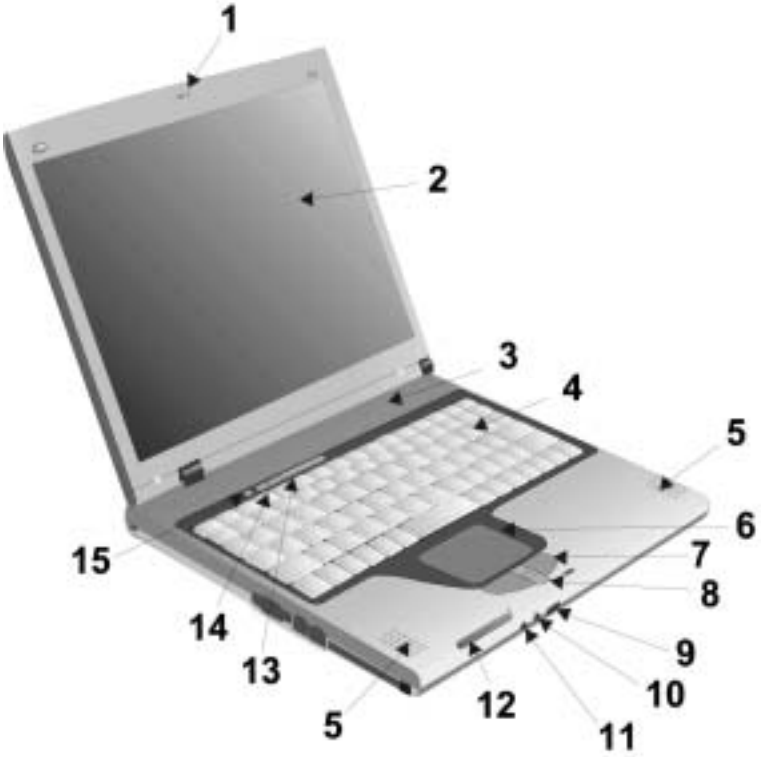

ENGLISH

Left View

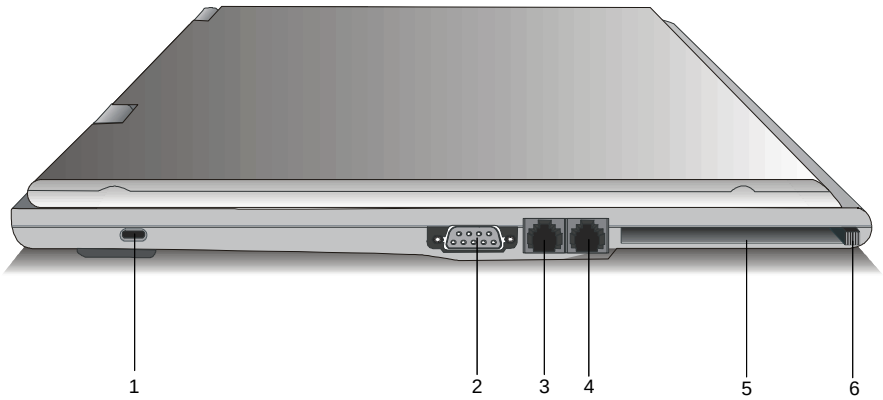

1. **Kensington lock hole**
2. **VGA port external video display port**
3. **Fax/modem RJ-11 Jack**
4. **LAN RJ-45 jack**
5. **PCMCIA card slot**
6. **PCMCIA card eject button**

Right View

1. **USB ports**
2. **DVD-ROM/Combo drive**
3. **DVD-ROM/Combo eject button**
4. **AC-adapter port**

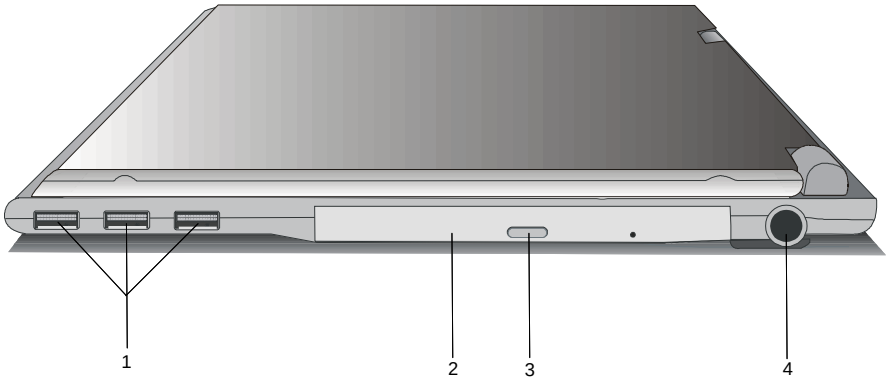

ENGLISH

Bottom View

1. **Ventilation slots**
2. **SO-DIMM RAM compartment**
3. **Battery release button**
4. **Battery**

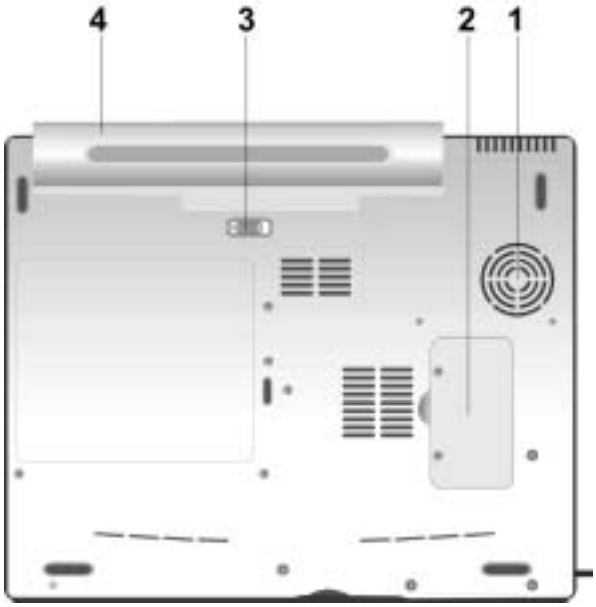

LED Status Indicators

The status indicators in the upper left corner of the keyboard light up when a particular function of the computer is active. Each indicator is marked with a symbol.

	CD ROM Drive	The computer is reading information from the DVD-ROM or the Combo drive.
	HDD	The computer is reading from, or writing to the built-in hard disk.
	Number-Lock	The keyboard is in Num-Lock mode.
	Caps-Lock	The keyboard is in Caps-Lock mode.
	Scroll-Lock	The keyboard is in Scroll-Lock mode.

Power Indicators

The power indicators show which power source the system is using. The power indicators remain active and viewable even when the LCD panel is closed.

Icon	Light	Description
	Blue	Power is on and the AC adapter is in use
	Flash blue	Power is in suspend mode
	Blue	Wireless LAN is in use
	Green	Power is on and the battery is in use
	Flashing Green	Battery is charging
	Red	Battery malfunction

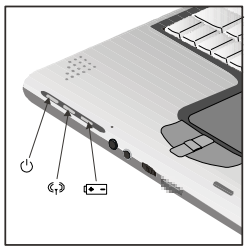

Function Keys

Hold the Fn key while pressing the numbered function key.

Function key	Description
Fn + F3	Toggles display on/off
Fn + F4	Suspend to RAM/HDD
Fn + F5	Toggles between LCD/CRT displays
Fn + F6	Decreases LCD brightness
Fn + F7	Increases LCD brightness

Numeric Keypad

The embedded numeric keypad consists of ten keys that make number intensive input more convenient. Press <NumLock> to enable or disable the numeric keypad.

Touchpad

The touchpad is a pressure sensitive pointing device that provides all the features of a two-button mouse. Its primary function is to move the cursor around the screen.

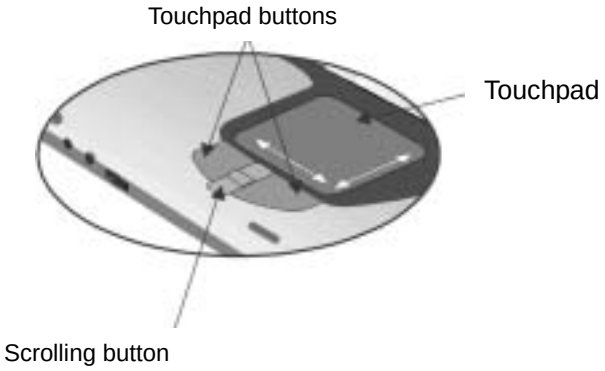

The instructions listed below describe how to use the touchpad.

1. First, place your fingers on the keyboard in the normal typing position. The touchpad is easily accessible by moving either your left or right thumb off the space bar and on to the touchpad.
2. Gently move your thumb across the pressure-sensitive touchpad in the direction you want the cursor to move. The pad detects the change in pressure and moves the cursor in the corresponding direction.
3. The touchpad offers another method of making selections in a software program. It is called *double-tapping*. This function corresponds to double-clicking with a mouse. Once the cursor has been moved to the object you want to select, *lightly* double-tap the pressure sensitive touchpad. This double-tapping on the touchpad will select the desired item and prompt the software to perform the related operation.
4. The buttons located directly below the touchpad are the same in function as those on a two-buttoned mouse. Clicking these buttons makes selections, drags objects, or performs a variety of other functions depending on the software. To select an object, first move the pointer over the object you want to select, and then press the left button one time. The functions of these buttons are software specific.
5. *Double-clicking* is a common technique for selecting objects or

launching programs from icons. Once you have moved the pointer over the object you wish to select, rapidly press the left button two times. This action is commonly referred to as “double-clicking” an object.

Dragging

There are two ways to drag:

- Move the pointer to the desired location then press down the left button. While still holding down the left button, move the pointer to the desired location. Release the button.
- Move the pointer to the desired location. Tap the touchpad twice quickly as if you were double-clicking, however do not remove your finger after the second tap. Move the cursor to the desired location. Lift your finger to finish dragging.

Adjust the touchpad settings by selecting Settings/Control Panel/Mouse/Buttons. These settings allow you to change the orientation of the touchpad from right-handed to left-handed, and fine tune the pointer movement and timing of clicks.

Touchpad Precautions

The Touchpad is a pressure-sensitive device. If not properly cared for, it can be easily damaged. Please take note of the following precautions.

- Make sure the touchpad does not come into contact with dirt, liquids or grease.
- Do not touch the touchpad if your fingers are dirty.
- Do not rest heavy objects on the touchpad or the touchpad buttons.

Scrolling Buttons

If you are scrolling through a document, you may find that using the scrolling button is more restful to your hand than holding down a mouse button. The scrolling button is located between the touchpad buttons. Push the top of the button to scroll up in a document or Web page; press the bottom of the button to scroll down in a document or Web page.

The DVD-ROM, or COMBO Drive

Your computer comes with a pre-installed DVD-ROM or COMBO drive. The DVD drive can read both DVDs and CDs. Your notebook identifies the drive with the letter following the hard drive letter. If your hard drive is D, then the DVD drive will be E.

Inserting a Disk

1. Press the button on the front of the drive to open the disk tray and pull the tray open.
2. Place the disk on the tray, label side up.
3. Place the disk on the central spindle and press gently until the disk clicks into place.
4. Slide back the tray until it clicks shut.

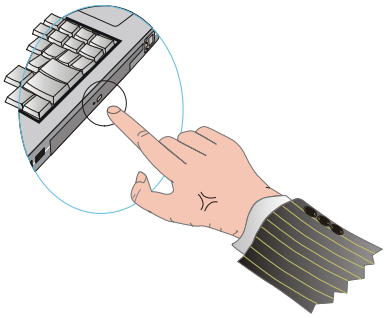

Removing a Disk

1. Make sure the computer is not accessing the DVD drive.
2. Press the eject button and pull the tray all the way out.
3. Pick up the CD by the edges and remove the disk from the tray. Push the tray into the computer until it closes fully.

Warning: When the computer is reading from a DVD-ROM/COMBO, the indicator light for the DVD-ROM will flash on. Do not attempt to remove a disk while this light is active.

Precautions for Handling DVD-ROM Discs

Keep these precautions in mind when handling DVD-ROM discs.

- Always hold the disc by the edges; avoid touching the surface of the disc.
- Use a clean, dry, cloth to remove dust, smudges, or fingerprints. Wipe from the center outward.
- Do not write on the surface of the disc.
- Extremes in temperature may damage discs. Store discs in a cool dry place.
- Do not use benzene, thinners, or cleaners with detergent. Only use DVD-ROM cleaning kits.

- Do not bend or drop the discs.
- Do not place objects on top of discs.

Warning: Do not insert any foreign objects into the disc tray. Do not force the tray to open or close manually. When not in use, keep the tray closed to prevent dust or dirt from entering the drive unit. If you experience difficulty when removing a CD disc, stretch a paper clip (or use a pin or a thin metal rod) and insert it into the emergency eject hole located on the front panel:

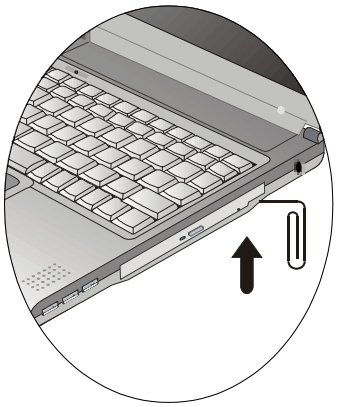

The CD disk tray should eject immediately. This procedure can also be used to remove a CD from the drive when the notebook is powered off.

Connecting the Printer

To connect a printer to your notebook via the USB port, use the supplied USB to printer adapter cable.

Note: Before use, you must install the driver for the adapter cable.

The PC Card Slot

The PC card slot can be used as an interface between your computer and a variety of communications devices, such as network adapters, SCSI adapters, fax/modems, or provide additional data storage capacity. Your computer's PC card slot supports PCMCIA Type II, 32-bit CardBus, and Zoomed Video cards.

Installing a Card

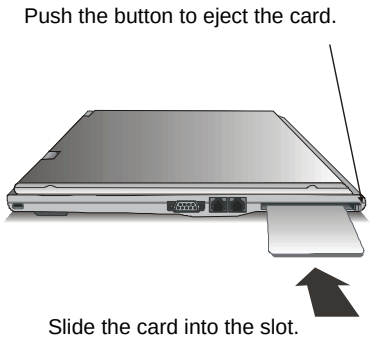

1. The top side of a PC card is usually identified with a label. Insert the card into the slot with the label side up and the edge with pinhole contacts going in first.
2. Insert the card into the slot. You will feel some resistance as the card slides into the back of the slot.
3. PC cards require drivers, or a program that allows the operating system to use a specific device. Many drivers are included with Windows, but if not, you will be prompted to install the driver included with your card.
4. The computer will beep twice to indicate successful installation. A single beep means that there was a problem recognizing the card.

Note: Please read the instructions included with individual PC cards. Some cards may be inserted with power on, while others require that the computer be turned off.

Removing a Card

1. If a card is in use, press the eject button on the card slot to release the button.
2. Press again to release the card.

Memory

Adding memory allows the computer to operate faster, handle more tasks simultaneously, and work more smoothly with large files. Users who increase memory demands - by adding additional programs, for example - may notice a slowdown in operating speed, and wish to increase memory. The notebook includes a memory card slot for adding additional memory.

ENGLISH

Note: Use only 1-inch DDR SODIMM (200 pin) modules.

Removing a Memory Card

1. Turn off the computer and disconnect the AC adapter. Turn the computer upside down and lay it on a flat surface.

2. Carefully remove the two RAM compartment cover screws and remove the RAM compartment cover.

3. Gently pull tabbed latched in the direction of the arrows (1). The card will pop up slightly.

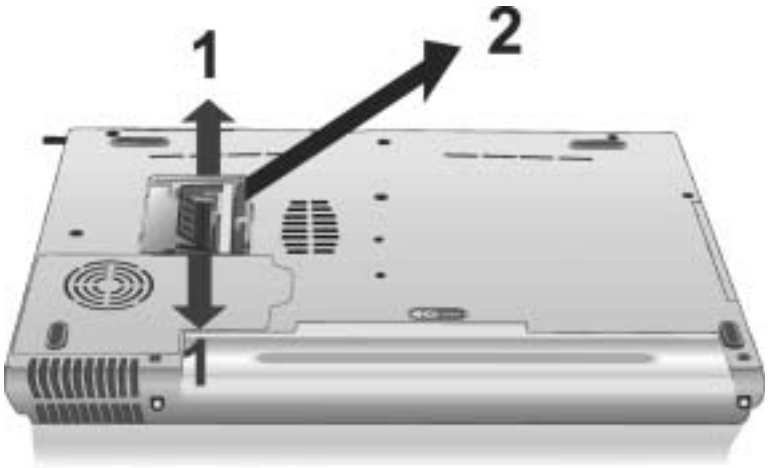

4. Pull upwards on the card and then slide the card out (2).

Inserting a Memory Card

1. Hold the memory card by its edges with the edge-connector side towards the slot.

2. Hold the card at a shallow angle (about 25 degrees) and insert the edge connector into the connector slot (3). The “gold teeth” of the edge connector should no longer be visible when the card is fully inserted.

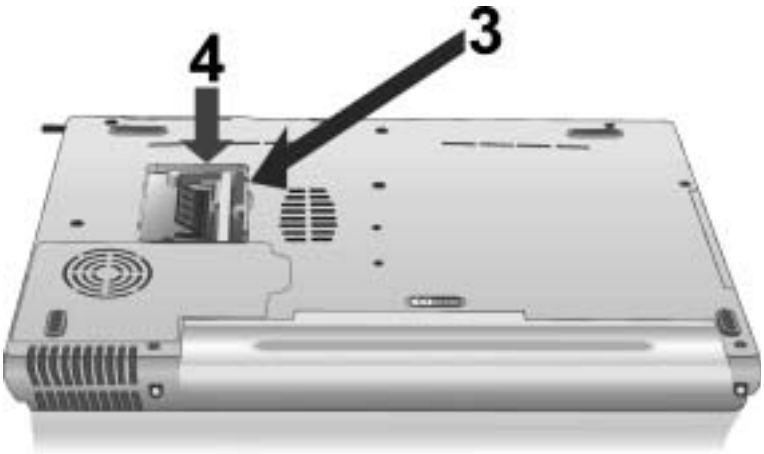

3. Press the card downwards so that it is flat inside the compartment (4). You may hear an audible click as the latches of the connector lock the card in place.

4. Replace the RAM compartment cover and secure it with the two screws.

Your notebook computer will automatically detect the change in RAM capacity when it restarts.

The Graphics System

Your computer has a high-performance graphics system, which can easily handle the demands of today's multimedia computing.

Screen Controls

Brightness

Function keys can increase or decrease the brightness of the monitor.

- <Fn> + <F6> decreases the LCD panel brightness
- <Fn> + <F7> increases the LCD panel brightness

Resolution

1. Click My Computer/Control Panel/Display/Settings. Click the Settings tab. The dialog box indicates the monitor resolution.
2. Use the slide bar to adjust the resolution. Normally, you should use the resolution the LCD or monitor was designed for.

Note: Using a lower resolution than the screen was designed for will reduce the area of the display. Using the computer in DOS mode may produce the same effect, because it uses a 640 by 480 resolution by default. You can stretch these low resolution displays to full screen size by selecting either the Expanded Display or Display Expansion Mode features in the BIOS utility. However, the stretching may cause distortion, especially to fonts.

High Resolution with an external monitor

Higher resolution modes may be used, as long as the monitor supports them.

Connecting to an External Monitor

The notebook has a VGA monitor port to connect your computer to an external monitor.

Using the VGA monitor port

1. Locate the 15-pin VGA monitor port on the left side of your notebook and connect the video signal cable from the external monitor (or the VGA adapter) to the monitor port.
2. Connect the power cable from the external monitor to a power outlet and turn on the monitor.
3. On your notebook, click the right touchpad button on the Windows desktop to open the desktop menu. Click **Properties** to open the Display Properties window.
4. In the Display Properties window, click **Advanced** in the Settings tab. Click the **Display Modes** tab.
5. Under Driver mode, you can select the appropriate options to change the display to an external monitor.
6. Adjustments to screen resolution and color depth can also be made in this dialog box.

Dual Displays

With Windows system, you may use an external monitor simultaneously with your notebook's LCD. You may also use the external monitor only and disable the LCD or only use the LCD. To do this you may first need to enable the multiple display settings in Windows 98.

1. Open the Control Panel.
2. Double-click **Display**. The Display Properties window opens.
3. Click the **Settings** tab.
4. Click the **Advanced** button.
5. Click the **Display Modes** tab. The screen shown at the right appears.
6. Choose Intel® Extreme Graphics 2 for mobile
7. Click Graphic Properties

These options are described below.

Single	You can choose which device to apply as the Primary display. In Single mode, the video display hot key combination is available—you can cycle the video output by pressing the Fn + F5 keys.
Mirror	In Mirror mode, the video display hot key combination is available—you can cycle the video output by pressing the Fn + F5 keys. If the external CRT is connected, the display on the LCD and the CRT is the same.

ENGLISH

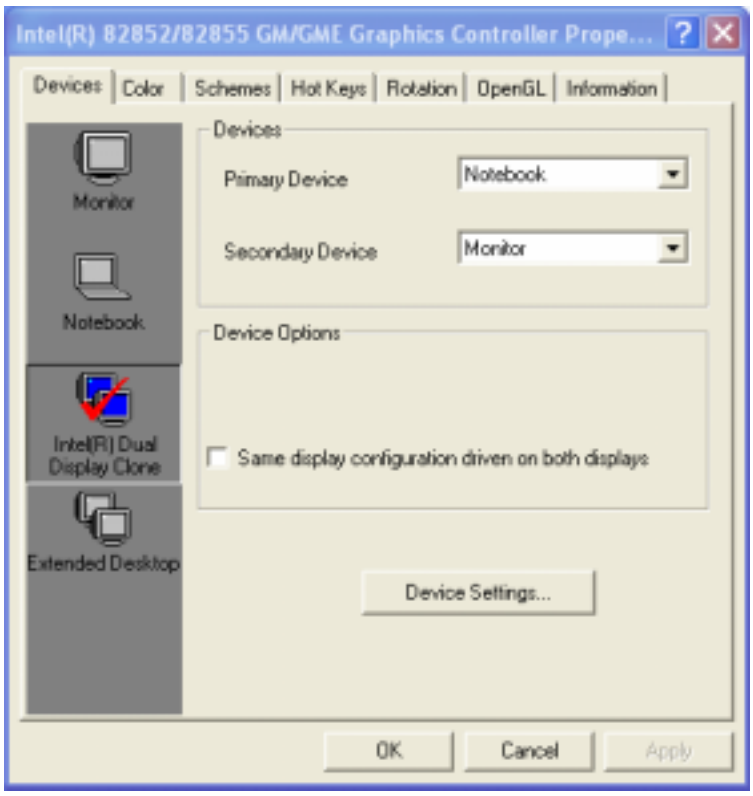

Tip: To ensure trouble-free video output, the first time you use an external monitor, change the output in the Display Properties dialog box. After successfully switching modes, you may use the video function keys.

Note: Light or dark dots may appear on the LCD due to technical limitations of LCD manufacturing. This will not effect normal operation of the LCD.

Communication Components

This system provides powerful communication functions, including built-in Fax/Modem and PCMCIA card slot.

Fax/Modem

A phone jack on the left side of the computer allows you to connect to the Internet to send and receive data. When used with fax software, it can be used as a fax. When using this function, first plug the phone cord into the jack.

Anti-electromagnetic wave clip

To eliminate electromagnetic waves, it is strongly recommended that you thread the left-side LAN cable & phone cord through the clip provided as shown below when using fax/modem jack or connecting to a phone line.

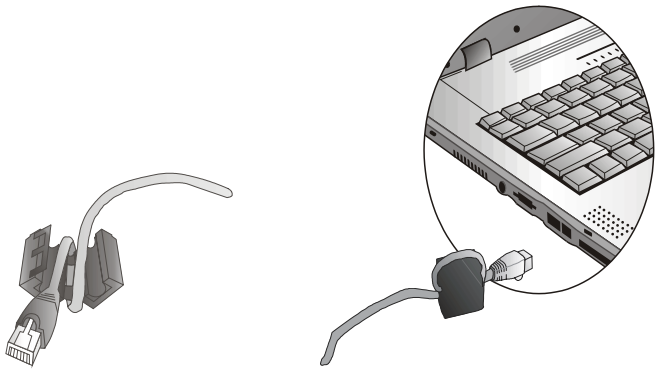

Attention:

When using the data communications function, please do not plug the phone cord into the ISDN or PBX jack to avoid an electrical surge that will cause the MDC module to burn.

ENGLISH

Information about the Wireless LAN button

Wireless LAN button

Even when a Wireless LAN module has **not** been built-in to your computer, the Wireless LAN indicator lights and remains active when you turn on the Wireless LAN button near the power button of your computer.

If Wireless LAN module has been built-in, your notebook will search for the device and will display an icon on the Windows task bar.

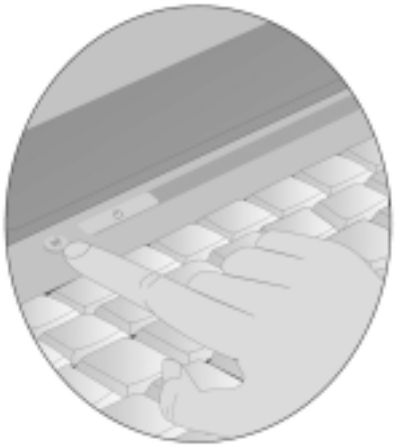

Note: If your Notebook does not include a built-in Wireless LAN module, please turn off the Wireless LAN button. If turned on, the indicator lights and remains active even if no wireless LAN is present.

Built-in Wireless Local Area Network

The built-in Wireless Local Area Network (WLAN) interface card can provide a quick access without using cables for the connection to the network equipments. The interface card adopts the IEEE 802.11 protocol and uses the 2.4 GHz ISM electric wave frequency band as the transmission interface to set up the communications between the host computer and other computers.

The way of processing communications through the WLAN interface card is the same as that through Ethernet interface card. The “Configuration Tool” is a Window application program. If users have a computer equipped with the WLAN interface card, then users can use it to set up the interface card and show the current configuration and status.

Note: Contact your distributor for the information of upgrading the wireless local area network.

DGT Warning

Article 14
Without permission, any company, firm or user shall not alter the frequency, increase the power, or change the characteristics and functions of the original design of the certified lower power frequency electric machinery.

Article 17
The application of low power frequency electric machineries shall not affect the navigation safety nor interfere a legal communication, if an interference is found, the service will be suspended until improvement is made and the interference no longer exists.

The foregoing legal communication refers to the wireless telecommunication operated according to the telecommunications laws and regulations. The low power frequency electric machinery should be able to tolerate the interference of the electric wave radiation electric machineries and equipments for legal communications or industrial and scientific applications.

IMPORTANT NOTE

FCC RF Radiation Exposure Statement: This equipment complies with FCC RF radiation exposure limits set forth for an uncontrolled environment. This device and its antenna must not be co-located or operating in conjunction with any other antenna or transmitter.

In order to maintain compliance with the FCC RF exposure guidelines, this equipment shouldbe installed and operated with minimum distance 20cm between the radiator and your body.Use only with supplied antenna. Unauthorized antenna, modification, or attachments could damage the transmitter and may violate FCC regulations.

ENGLISH

Chapter 3

Making Connections

ENGLISH

Making Connections

Your computer is equipped with a full array of ports and connectors, including standard input/output (I/O) ports for quickly and easily adding peripheral devices such as printers, keyboards, and mice. Refer to documentation included with individual devices for details on connecting these devices to your computer. Along with the standard ports found on most computers, your computer also includes IEEE 1394 ports, modem and LAN ports, offering advanced communications technology.

Left Side Connectors

1. Kensington Lock

Your computer includes a Kensington lock hole to be used with a standard Kensington lock. You can connect the notebook to a large object with the Kensington lock to prevent theft of your notebook. See the documentation that comes with your Kensington lock for more information.

2. VGA Out (External Video) Port

The 15-pin VGA port can be used to connect your computer to an external monitor. (See the Graphics System in chapter 2 for more information).

3. Fax/modem RJ-11 Jack

The fax/modem can transmit data using the 56 Kbps V.90 protocol, and send and receive faxes at 14.4 Kbps. In some countries, local

regulations may not permit the use of the fax/modem designed for this system. In this case, you may use a PCMCIA modem.

Warning: Plug your modem into an analog telephone jack only. Most homes use analog lines. Do not use digital lines, such as the PBX and ISDN systems found in many offices. Digital lines may damage your modem.

4. LAN RJ-45 Jack

With the built-in Ethernet LAN combo, you can make LAN connections without installing PC cards. Connection speed is 10/100 Mbps.

Right Side Connectors

1. USB (Universal Serial Bus) Ports

The Universal Serial Bus (USB) is the latest standard for attaching monitors, input devices, scanners, and other devices to a PC. USB devices can be chained together on a single cable.

2. DC-in Jack

Connect the DC power cable from the AC adapter to this jack.

ENGLISH

Front Side Connectors

1. Audio-out Jack

Connect a stereo headset or external speakers to this jack to listen to multimedia.

2. Microphone-in Jack

Connect a microphone this jack to record audio.

ENGLISH

Chapter 4

System Software

ENGLISH

System Software

Software List

Operating System

Your hard drive already contains all the software you need to operate the computer.

Audio and Video Drivers

These utility programs and drivers are included for the PC Card drive, the sound system, and the graphics sub-system.

DVD Player Application

The DVD player application will let you watch DVD movies on your notebook (for DVD-ROM module only).

System Recovery

Before you start

Your system includes Recovery CD-ROMs. Follow the steps in the appropriate section below to reinstall the operating system, the system software, or add a new hard disk.

- The factory has pre-partitioned your system's hard disk, so you may directly install the system software; however, if you change a new hard disk, you must first partition it.
- **If you reinstall your operating system, all of the data originally on the hard disk will be overwritten. Before reinstalling the operating system, carefully backup any important data.**
- Your system is shipped with Recovery CD-ROMs. Before reinstalling, note the CD-ROM labels.

Caution: When you re-install operating system by Recovery CD for Windows, we **STRONGLY** recommend connecting the AC adapter (do NOT use battery alone) to avoid warning message.

ENGLISH

Recovering Windows and Original Software

If your Windows operating system is lost or damaged, use the Recovery CD (Windows).

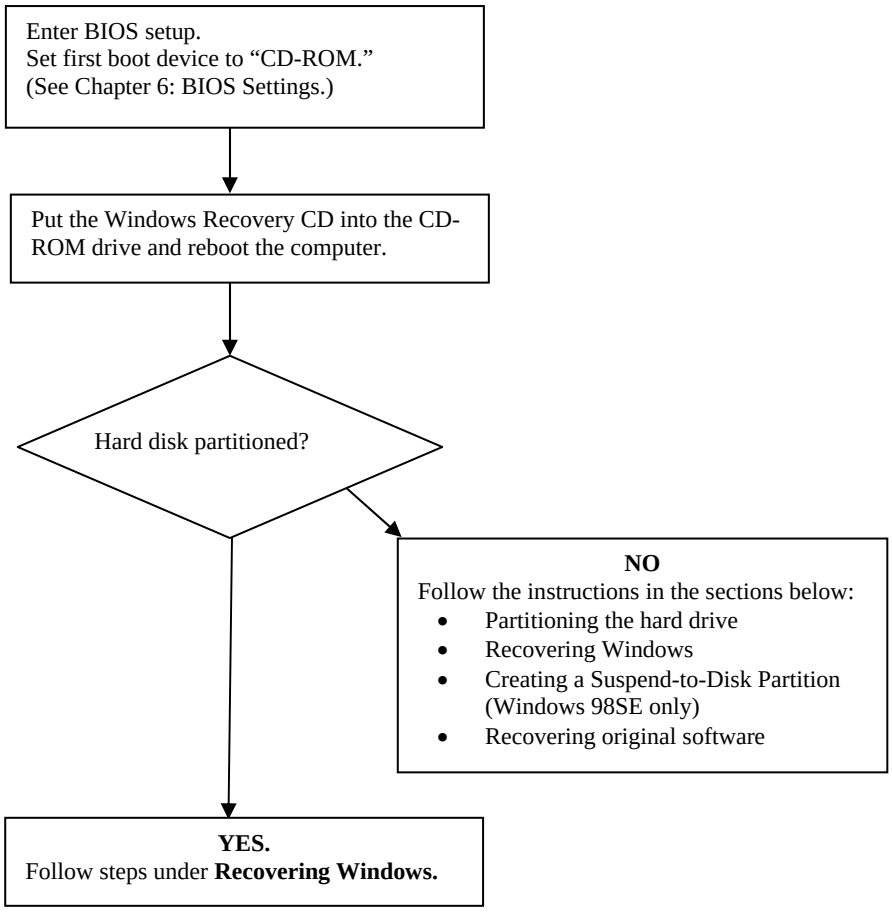

Partitioning the Hard Drive

Hard drive is not partitioned.

↓

When the Microsoft Windows startup menu appears, select **(2) Go to MS-DOS PROMPT**. Press Enter to repartition your hard disk.

↓

At the A:\ prompt, type fdisk and press Enter.
Note: If your computer is set to boot from the CD-ROM drive, “A” refers to your CD-ROM.

↓

If you see the message: “Do you wish to enable large disk support (Y/N),” Select “Y.”
On the first screen select “Create DOS partition or logical DOS drive.”
On the next screen select “Create Primary DOS partition.” This will create the largest possible partition as the C drive.

↓

After completing disk partitioning, press ESC to exit fdisk.
Press <Alt>, <Ctrl>, and <Del> to reboot your computer.
Follow steps under **Recovering Windows**.

ENGLISH

Windows XP Reinstallation

Enter BIOS setup.
Set first boot device to “CD-ROM.”
(See Chapter 6: BIOS Settings.)

↓

Put the Recovery CD for Windows XP. Disc#1 into the CD-ROM drive and reboot the computer.

↓

When the Microsoft Windows XP. Menu appears, choose option 1: Recovery CD for Windows XP. When prompted, insert the Disc#2. It will take approximately fifteen minutes to complete the installation. Remove the CD-ROM from the drive when the installation is complete.

↓

Press <Alt>, <Ctrl>, and <Del> to reboot the computer. Enter the BIOS Setup Utility and select Boot priority. Reset the boot priority to either A: or C:

↓

While starting Windows, reenter the Windows information as prompted.

ENGLISH

Chapter 5

Power Management

ENGLISH

Power Management

Battery Calibration

The first time you use a battery, you should calibrate it. The calibration process empties and charges the battery one time. This allows the Windows battery gauge to accurately monitor battery status. To calibrate a battery, follow these steps:

1. Plug in the AC adapter.
2. Restart the computer and when the startup screen appears, press **Del** key to enter the BIOS Setup Utility.
3. In the BIOS Setup Utility, select Advance settings. , choose Battery learning, then press enter.

```
Execute Battery Learning function?

[OK]          [Cancel]
```

4. Press <OK> at the above Battery Auto Calibration dialog to begin the battery calibration..

Battery Calibration will take from 4 to 8 hours, depending on how much power the battery may already contain.

Note: For optimum performance, we recommend calibrating the battery again every three months. Each time you charge and discharge a battery, it loses a tiny part of its storage capacity, so that, over time, it will store less than its potential charge. Similarly, if you do not use the battery for a few days, it will slowly self-discharge, and when it is recharged, it will hold less than 100% of the potential charge.

Monitoring Battery Power

There are two ways to monitor how much power the battery has left.

1. Click start/Control Panel/Power Options; then click Power Meter.
2. Moving the cursor to the battery icon on the taskbar is the simplest way to check on battery power status.

If you do not see the battery icon, enable it in Start /Control Panel/Power Options. Choose the Advanced tab and click “Always show icon on the taskbar.”

Low Battery Alarms

How your computer responds to a low battery condition is set under Start/Control Panel/Power Options/Alarms.

Two different power alarms can be enabled or disabled: the Low Battery Alarm, and the Critical Battery Alarm. Use the slidebar to set the power level at which the alarms are activated. Click on the Alarm Action button to choose whether the alarm sounds, displays a message, or both.

Warning: When battery power is low, the Notebook will display a warning on the screen. Take immediate action, such as saving files or connecting to the AC adapter, or data may be lost.

When the computer alerts you that the battery is low, immediately do one of the following:

- Connect the AC power adapter

- Save your work, turn off the computer and replace the discharged battery with a charged battery (See *Changing the Battery* below).

Do not restart the computer until you have connected to an AC adapter, or replaced the discharged battery with a charged battery.

Battery Charging

When you use the AC adapter to connect your Notebook to a power outlet, the internal battery will automatically begin to recharge. While the battery is charging, the Battery Charge icon on the Indicator panel will be active. When the battery is fully charged, the Battery Charge icon will turn off.

If your computer is turned off or standby mode, a fully discharged battery will take about 3 hours to recharge.

Note: A fully charged battery can run the Notebook for approximately 4 hours. (Pentium-M 1.4GHz)

Power Saving Modes

Adjust the default power management settings in the Power Options/ Advanced dialog box in the Control panel. The Power Options Properties dialog box allows you to set different actions to take when the computer is left idle for a certain amount of time.

Suspend Mode

There are several possible settings for suspend mode, which can be selected in the Power Management dialog box: You may have the notebook standby, suspend, or you can power off the computer altogether.

Initiating Suspend Mode

There are four ways to initiate suspend mode. The settings can be adjusted in the Power Management dialog box:

- The computer will automatically enter suspend mode when not used for a set period of time.
- Selecting the Stand by button in the Shut Down Windows dialog box.
- Closing the screen cover (assuming no external monitor has been connected).
- Pressing the power button (if enabled in power settings).
- Pressing the suspend function key <Fn> + <F4>.

Power Button Settings

The function of the power button can be set to Shutdown or Standby in the Power Management Properties dialog box in the Windows Control Panel. However, holding the power button down for more than four seconds will force a power off while operating under any situation, resulting in the loss of any unsaved information.

Power Saving Tips

- Avoid operating the fax/modem, or audio and video applications when using battery power. Operating a fax modem, video, or audio equipment increases the computer's power requirements.
- Decreasing monitor brightness can also save power. Decrease brightness by pushing <Fn> + <F6>. Increase it by pushing <Fn> + <F7>.

ENGLISH

When to Replace the Battery

Over time, the battery's capacity gradually decreases. We recommend that you replace your battery when you notice that it begins to store significantly less charge.

Changing the Battery

Change the main battery pack as follows:

1. Turn off the computer.
2. Close the screen cover and turn the computer over.
3. Slide the side battery latch (1) away from the battery. Continue to hold it until the battery is removed.
4. Push in the latch on the battery (2) while lifting the battery out of the compartment. Remove the battery.
5. Make sure the replacement battery is properly orientated. Slide back the side battery latch (1) then insert the battery into the battery compartment. Check that the latch locks back into position.

Heat Considerations

The computer's processor has been specially designed to consume little power, and generates very little heat. However, working in a hot environment, or working for long periods may raise the temperature. Your computer takes the following steps to lower temperature:

1. The cooling fan will automatically turn on. You may feel air coming from a vent at the left side when this happens.
2. If the temperature continues to rise, processor activity will be reduced. You may notice a slight loss of performance when this happens.

ENGLISH

Chapter 6

Using the BIOS Setup Utility

Using the BIOS Setup Utility

Your notebook has a BIOS setup utility which allows you to configure important system settings, including settings for various optional functions of the computer. This chapter explains how to use the BIOS setup utility.

BIOS Setup Menu

The BIOS setup Utility allows you to configure your computer's basic settings. When you turn your computer on, the system reads this information to initialize the hardware so that it can operate correctly. Use the BIOS setup utility to change your computer's start-up configuration. For example, you can change the security and power management routines of your system.

Starting the BIOS Setup Utility

You can only enter the BIOS setup utility as the computer is booting, that is between the time you turn on the computer and before the Windows interface appears. If your computer is already on, shut down your computer completely (power off) and restart it and then press the **Del** key to enter the setup utility.

Navigating and Entering Information in BIOS

Use the following keys to move between fields and to enter information:

← →	Select Screen
↑↓	Push the up and down arrow keys to move among selections, then press **Enter** to make a selection.
+ -	Change Option
Tab	Select Field
F1	General Help
F10	Save and Exit
ESC	Press **Esc** to exit any section. If you wish to exit the BIOS utility *without* saving changes, go to the main menu, then press **Esc.**

Users are allowed to enter new values to replace the default settings in certain fields, and the rest fields are specified by system default parameters and cannot be modified by users. Reverse the attribute of the main options and press the Enter key to enter into the submenu. Press the Esc key to return to the previous configuration page.

ENGLISH

The Main Menu

BIOS SETUP UTILITY

Main Advanced Boot Security Exit

System Overview	Use [ENTER] , [TAB] Or [SHIFT-TAB] to select a field.
AMIBIOS Version : R0.XX Build Date: 01/01/04	Use [+] or [-] to Configure system Time
Processor Type :Intel® Pentium® M processor 1400MHz Speed :1400MHz	
System Memory Size : 248MB	⟷ Select Screen ↑↓ Select Item +- Change Option Tab Select Field F1 General Help F10 Save and Exit ESC Exit
System Time **[19:14:50]** **System Date** **[Thu 01/01/2004]**	

V02.53 ©Copyright 1985-2002, American Megatrends , Inc.

Figure 6-1

ENGLISH

Advanced Menu

BIOS SETUP UTILITY

Main **Advanced** Boot Security Exit

Advanced Setting		Select the amount of system memory used by the internal graphics device..
Graphics Mode Select	[Enabled, 8MB]	
Auto DIM function	[Enable]	
Legacy USB Support	[Enable]	
Battery Learning	[Enter]	
Start FAN Learning	[Enter]	
		←→ Select Screen
		↑↓ Select Item
		+- Change Option
		F1 General Help
		F10 Save and Exit
		ESC Exit

V02.53 ©Copyright 1985-2002, American Megatrends , Inc.

Figure 6-2

ENGLISH

Boot menu

BIOS SETUP UTILITY

Main Advanced **Boot** Security Exit	
1st Boot Device [CDROM: SM-QSI DVD-R] **2nd Boot Device [HDD:PM-FUJITSU MHT2040AT]** **3rd Boot Device [Network:Realtek Boot]**	Specifies the boot sequence from the available devices. A device enclosed in Parenthesis has been disabled in the corresponding type menu. ←→ Select Screen ↑↓ Select Item +- Change Option F1 General Help F10 Save and Exit ESC Exit
V02.53 ©Copyright 1985-2002, American Megatrends , Inc.	

Figure 6-3

ENGLISH

Security menu

BIOS SETUP UTILITY

Main Advanced Boot **Security** Exit	
Security Settings	Install or Change the password.
Supervisor Password : Not Installed	
User Password : Not Installed	
Change Supervisor Password	
Change User Password	
	←→ Select Screen
	↑↓ Select Item
	Enter Change
	F1 General Help
	F10 Save and Exit
	ESC Exit
V02.53 ©Copyright 1985-2002, American Megatrends , Inc.	

Figure 6-4

ENGLISH

Exit menu

BIOS SETUP UTILITY

Main Advanced Boot Security **Exit**	
Exit Options	Exit system setup
Save Changes and Exit	after saving the changes.
Discard changes and Exit	
Discard Changes	F10 key can be used
	for this operation.
Load Optimal Defaults	
Load Failsafe Defaults	
	←→ Select Screen
	↑↓ Select Item
	Enter Go To Sub Screen
	F1 General Help
	F10 Save and Exit
	ESC Exit
V02.53 ©Copyright 1985-2002, American Megatrends, Inc.	

Figure 6-5

Change User Password

With a User password, you can enter the Setup Utility and change or remove the User password, but you cannot enter the Setup Utility and change or remove the Supervisor password, nor enable diskette access if it has been disabled.

Change Supervisor Password

A supervisor password must be set before a lower-level user password can be set. After selecting **Change Supervisor Password**, press **Enter**. You will be prompted for the new password, and then again to verify it. Type in 6 or fewer keystrokes. If you make an error, press **Esc** to start over.

Resetting the CMOS to Default Settings

The main page provides the system parameters for you to reset the CMOS to default settings. After you enter this page, select the Load Optimal Defaults:

```
Load Optimal Defaults?

  [OK]        [Cancel]
```

Select [OK] to reset the CMOS to default settings.

Exiting and Saving

Save Settings and Exit	Select this option to save changes to the field values, and restart the computer using the new values. (Pressing F10 from any of the menu screens also allows you to save settings and exit.)
Exit Without Saving	Select this option to discard any changes you have made to the field values, and restart the computer using the old values.

ENGLISH

Appendix A

Frequently Asked Questions

ENGLISH

Frequently Asked Questions

Q: My screen seems to time out too quickly. I have to constantly hit a key or move the mouse in order to bring it back. How can I adjust the screen time-out?

A: This is part of Windows Power Management. Access Power Management by clicking on **Start / Settings / Control Panel / Power Management**. Adjust the display time-out by selecting a time next to the Turn off monitor option. You may also select different time-out values for adapter and battery power states.

Q: I've heard that cleaning up and rearranging files on the hard drive will improve the startup speed of my programs. How do I do this?

A: Hard disk maintenance can improve the startup speed of programs. This maintenance includes deleting unnecessary files, and defragmenting, which rearranges data into more efficient groupings. Windows includes utilities for performing these maintenance tasks. Run Disk Cleanup to remove unnecessary files, and Disk Defragmenter to defragment the hard drive. For more information, refer to Windows documentation.

Q: The internal fax/modem dial tone sound is too low. How can I increase the volume?

A: There are two methods to adjust the volume of the internal fax/modem dial tone:

Method 1: To Start/Control panel/電話及數據機/選項/數據機/內容/數據機的控制台。調整滑桿即可調整內建傳真/數據機撥號音大小。.

Method 2: Use the volume control button on the front of the computer.

Q: What kind of external microphone can I use with my notebook computer?

A: You will need to use a self-amplifying microphone.

Q: There is feedback noise coming from my speakers. What can I do?

A: Double click on the Speaker icon on the task bar. Then, under Microphone Balance, check the Mute box.

Q: Because of a software problem, I was unable to shut down power normally. I pressed the power button to force a power off, but it didn't work. How can I force a power off?

A: Make sure you press the power button for at least 4 seconds. Normally, this will force a power off. If this does not work, you can shut down the computer by inserting a needle into the reset button pinhole. (The reset button locate on the computer bottom side.)

Q: Why can't I charge the battery of my portable computer after it was out of use for some time?

A: After portable computers have not been used for a long time (more than one month), the batteries will go into the low voltage protection mode due to data back-ups and natural electrical discharge. At that point, restoring normal voltage will require slow charging over a period of several hours. Calibration can be performed after the battery has returned to a normal condition.

Q: My computer alerts "CMOS Battery Low", what can I do?

A: If you keep your computer in no power situation (unplug the computer from the power outlet and remove battery at the same) over 45 days, your data in CMOS will be lost.

Please reconfigure your CMOS by following steps:

1. Press **F1** to enter the BIOS setup utility.
2. Select **"Load Optional Defaults?"**. When you see the following prompt, choose <OK> and then press <Enter>.

```
Load Optional Defaults?
   [OK]            [Cancel]
```

3. Select **"Save Changes and Exit".** When you see the following prompt, choose <OK> and then press <Enter> to restart your computer.

Save configuration changes and exit setup?

[OK] [Cancel]

ENGLISH

Appendix B

Statements

Statements

Federal Communications Commission Statement

This equipment has been tested and found to comply with the limits for a Class B digital device, pursuant to Part 15 of the FCC Rules. These limits are designed to provide reasonable protection against harmful interference in a residential installation. This equipment generates, uses, and can radiate radio frequency energy and, if not installed and used in accordance with the instructions, may cause harmful interference to radio communications. However, there is no guarantee that interference will not occur in a particular installation. If this equipment does cause harmful interference to radio or television reception, which can be determined by turning the equipment off and on, the user is encouraged to try to correct the interference by one or more of the following measures:

1. Reorient or relocate the receiving antenna.
2. Increase the separation between the equipment and the receiver.
3. Connect the equipment into an outlet on a circuit different from that to which the receiver is connected.
4. Consult the dealer or an experienced radio/TV technician for help.

Shielded interconnect cables and shielded AC power cable must be employed with this equipment to insure compliance with the pertinent RF emission limits governing this device. Changes or modifications not expressly approved by the system's manufacturer could void the user's authority to operate the equipment.

Declaration of Conformity

This device complies with part 15 of the FCC rules. Operation is subject to the following conditions:

- This device may not cause harmful interference
- This device must accept any interference received, including interference that may cause undesired operation.

About The Modem

This equipment complies with Part 68 of FCC rules. On the bottom of this equipment is a label that contains, among other information, the FCC registration number and ringer equivalence number (REN) for this equipment. If requested, this information must be provided to the telephone company.

The modem jack of this equipment complies with Sub-part F of Part 68 of FCC rules.

The REN is used to determine the quantity of devices that may be connected to the telephone line. Excessive RENs on the telephone line may result in the devices not ringing in response to an incoming call. In most, but not all areas, the sum of the RENs should not exceed five (5.0). To be certain of the number of devices that may be connected to the line, as determined by the total RENs contact the telephone company to determine the maximum REN for the calling areas.

If the terminal equipment causes harm to the telephone network, the telephone company will notify you in advance that temporary discontinuance of service may be required. However, if advance notice isn't practical, the telephone company will notify the customer as soon as possible. Also, you will be advised of your right to file a compliant with the FCC if you believe it necessary.

The telephone company may mark changes in its facilities, equipment, operations, or procedures that could affect the operation of the equipment. If this happens, the telephone company will provide advance notice in order for you to make the necessary modifications in order to maintain uninterrupted service.

If trouble is experienced with this equipment, please contact the manufacturer for repair and (or) warranty information. If the trouble is causing harm to the telephone network, the telephone company may request you remove the equipment from the network until the problem is resolved.

The equipment cannot be used on public coin service provided by the telephone company. Connection to Party Line Service is subject to state tariffs. (Contact the state public utility commission, public service commission or corporation commission for information.)

The Telephone Consumer Protection Act of 1991 marks it unlawful for any person to use a computer or other electronic device, including fax machines, to send any message unless such message clearly contains in a margin at the top or bottom of each transmitted page or on the first page of the transmission, the date and time it is sent and an identification of the business or other entity, or other individual sending the message and the telephone number of the sending machine or such business, other entity, or individual. (The telephone number provided may not be a 900 number or any other number for which charges exceed local or long-distance transmission charges.) To program this information, refer to the manual of the communication software.

European Notice

Products with the CE Marking comply with both the EMC Directive (89/336/EEC) and the Low Voltage Directive (73/23/EEC) issued by the Commission of the European Community.

Compliance with these directives implies conformity to the following European Norms:

- **EN 55022** (CISPR 22) Radio Frequency Interference
- **EN 55024** (EN61000-4-2, EN61000-4-3, EN61000-4-4, EN61000-4-5, EN61000-4-6, EN61000-4-8,EN61000-4-11, EN61000-3-2, EN61000-3-3) Generic Immunity Standard
- **EN 60950** (IEC950) Product Safety

R&TTE (CE) MANUAL REGULATORY REQUIREMENT (WLAN - IEEE 802.11b/g)

802.11b/g Restrictions:

- European standards dictate maximum radiated transmit power of 100mW EIRP and frequency range 2.400-2.4835GHz.
- In France, the equipment must be restricted to the 2.4465-2.4835GHz frequency range and must be restricted to indoor use."

CE Declaration of Conformity

CE0984 ⓘ

Is herewith confirmed to comply with the requirements set out in the Council Directive on the Approximation of the Laws of the Member States relating to Electromagnetic Compatibility (89/336/EEC), Low-voltage Directive (73/23/EEC) and the Amendment Directive (93/68/EEC), the procedures given in European Council Directive 99/5/EC and 89/3360EEC.

The equipment was passed. The test was performed according to the following European standards.

- EN 300 328 V.1.4.1 (2003-04)
- EN 301 489-1 V.1.4.1 (2002-04) / EN 301 489-17 V.1.2.1 (2002-04)
- EN 50371:2002
- EN 60950:2000

UL CAUTION

To reduce the risk of fire, use only No. 26 AWG or larger telecommunication line cord.

IMPORTANT SAFETY INSTRUCTIONS

When using your telephone equipment, basic safety precautions should always be followed to reduce the risk of fire, electric shock and injury to persons, including the following:

Do not use this product near water, for example, near a bathtub, wash bowl, kitchen sink or laundry tub, in a wet basement or near a swimming pool.

Avoid using a telephone (other than a cordless type) during an electrical storm. There may be a remote risk of electric shock from lightning.

Do not use the telephone to report a gas leak in the vicinity of the leak.

Use only the power cord and batteries indicated in this manual. Do not dispose of batteries in a fire. They may explode. Check with local codes for possible special disposal instructions.

Canadian Department of Communications

This class B digital apparatus meets all requirements of the Canadian Interference-causing Equipment Regulations.

About the Modem

The Industry Canada label identifies certified equipment. This certification means that the equipment meets certain telecommunications network protective, operational and safety requirements. The department does not guarantee the equipment will operate to the user's satisfaction.

Before installing this equipment, users should ensure that it is permissible to be connected to the facilities of the local telecommunications company.

The equipment must also be installed using an acceptable method of connection. In some cases, the company's inside writing associated with a single line individual service may be extended by means of a certified connector assembly (telephone extension cord). The customer should be aware that compliance with the above conditions may not prevent degradation of service in some situations.

Repairs to certified equipment should be made by an authorized Canadian maintenance facility designated by the supplier. Any repairs or alterations made by the user to this equipment, or equipment malfunctions, may give the telecommunications company cause to request the user to disconnect the equipment.

Users should ensure for their own protection that the electrical ground connections of the power utility, telephone lines and internal metallic water pipe system, if present, are connected together. This precaution may be particularly important in rural areas.

CAUTION: Users should not attempt to make such connections themselves, but should contact the appropriate electric inspection authority, or electrician, as appropriate.

"The Load Number (LN) assigned to each terminal device denotes the percentage of the total load to be connected to a telephone loop which is used by the device. To prevent overloading, the termination on a

loop may consist of any combination of devise subject only to the requirement that the total of the Load Numbers of all the devices does not exceed 100."

Battery Disposal

THIS PRODUCT CONTAINS A LITHIUM-ION OR NICKEL-METAL HYDRIDE BATTERY. IT MUST BE DISPOSED OF PROPERLY. CONTACT LOCAL ENVIRONMENTAL AGENCIES FOR INFORMATION ON RECYCLING AND DISPOSAL PLANS IN YOUR AREA.

CAUTION FOR ADAPTER

THIS NOTEBOOK COMPUTER IS FOR USE WITH MODEL NO. LSE9802X2060

BATTERY CAUTION

DANGER OF EXPLOSION IF BATTERY IS INCORRECTLY REPLACED.

REPLACE ONLY WITH THE SAME OR EQUIVALENT TYPE RECOMMENDED BY THE MANUFACTURER. DISPOSE OF USED BATTERIES ACCORDING TO THE MANUFACTURER'S INSTRUCTIONS.

CLASS 1 LASER PRODUCT

LASERSCHUTZKLASSE 1 PRODUKT TO EN60825

CAUTION: THIS APPLIANCE CONTAINS A LASER SYSTEM AND IS CLASSIFIED AS A "CLASS 1 LASER PRODUCT." TO USE THIS MODEL PROPERLY, READ THE INSTRUCTION MANUAL CAREFULLY AND KEEP THIS MANUAL FOR FUTURE REFERENCE. IN CASE OF ANY TROUBLE WITH THIS MODEL, PLEASE CONTACT YOUR NEAREST "AUTHORIZED SERVICE STATION." TO PREVENT DIRECT EXPOSURE TO THE LASER BEAM, DO NOT TRY TO OPEN THIS ENCLOSURE.