RADIO TEST REPORT
FCC ID: FPW-511AS

Product:	2 in 1 tablet PC
Trade Name:	vitaLASC
Model No.:	511
Serial Model:	N/A
Report No.:	NTEK- 2016NT09128878F2
Issue Date:	15 Oct. 2016

Prepared for

Jing Mold Electronic Technology (Shen Zhen) Co., Ltd.

Xinqiao,3rd Industral Estate,Shajing Baoan,Shenzhen,China

Prepared by

NTEK TESTING TECHNOLOGY CO., LTD.
1/F, Building E, Fenda Science Park, Sanwei Community,
Xixiang Street Bao'an District, Shenzhen 518126 P.R. China
Tel.: +86-755-6115 6588
Fax.: +86-755-6115 6599
Website:http://www.ntek.org.cn

TABLE OF CONTENTS

1 TEST RESULT CERTIFICATION 3

2 SUMMARY OF TEST RESULTS 4

3 FACILITIES AND ACCREDITATIONS 5

3.1 FACILITIES 5
3.2 LABORATORY ACCREDITATIONS AND LISTINGS 5
3.3 MEASUREMENT UNCERTAINTY 5

4 GENERAL DESCRIPTION OF EUT 6

5 DESCRIPTION OF TEST MODES 8

6 SETUP OF EQUIPMENT UNDER TEST 9

6.1 BLOCK DIAGRAM CONFIGURATION OF TEST SYSTEM 9
6.2 SUPPORT EQUIPMENT 10
6.3 EQUIPMENTS LIST FOR ALL TEST ITEMS 11

7 TEST REQUIREMENTS 13

7.1 CONDUCTED EMISSIONS TEST 13
7.2 RADIATED SPURIOUS EMISSION 18
7.3 6DB BANDWIDTH 27
7.4 PEAK OUTPUT POWER 30
7.5 POWER SPECTRAL DENSITY 33
7.6 CONDUCTED BAND EDGE MEASUREMENT 37
7.7 ANTENNA APPLICATION 39

1 TEST RESULT CERTIFICATION

Applicant's name ..... :	Jing Mold Electronic Technology (Shen Zhen) Co., Ltd.
Address ..... :	Xinqiao,3rd Industral Estate,Shajing Baoan,Shenzhen,China
Manufacture's Name ..... :	Jing Mold Electronic Technology (Shen Zhen) Co., Ltd.
Address ..... :	Xinqiao,3rd Industral Estate,Shajing Baoan,Shenzhen,China
Product description	
Product name ..... :	2 in 1 tablet PC
Model and/or type reference ..... :	511
Serial Model ..... :	N/A

Measurement Procedure Used:

APPLICABLE STANDARDS	
APPLICABLE STANDARD/ TEST PROCEDURE	TEST RESULT
FCC 47 CFR Part 2, Subpart J:2016 FCC 47 CFR Part 15, Subpart C:2016 KDB 174176 D01 Line Conducted FAQ v01r01 ANSI C63.10-2013 FCC KDB 558074 D01 DTS Meas Guidance v03r05	Complied

This device described above has been tested by NTEK Testing Technology Co., Ltd., and the test results show that the equipment under test (EUT) is in compliance with the FCC requirements. And it is applicable only to the tested sample identified in the report.
This report shall not be reproduced except in full, without the written approval of NTEK Testing Technology Co., Ltd., this document may be altered or revised by NTEK Testing Technology Co., Ltd., personnel only, and shall be noted in the revision of the document.
The test results of this report relate only to the tested sample identified in this report.

Date of Test : 12 Sep. 2016 ~ 15 Oct. 2016

Testing Engineer : Lake. Xie
(Lake Xie)

Technical Manager : Jason chen
(Jason Chen)

Authorized Signatory : Sam. Chen
(Sam Chen)

2 SUMMARY OF TEST RESULTS

FCC Part15 (15.247), Subpart C			
Standard Section	**Test Item**	**Verdict**	**Remark**
15.207	Conducted Emission	PASS	
15.247 (a)(2)	6dB Bandwidth	PASS	
15.247 (b)	Peak Output Power	PASS	
15.247 (c)	Radiated Spurious Emission	PASS	
15.247 (d)	Power Spectral Density	PASS	
15.205	Band Edge Emission	PASS	
15.203	Antenna Requirement	PASS	

Remark:
1. "N/A" denotes test is not applicable in this Test Report.
2. All test items were verified and recorded according to the standards and without any deviation during the test.

3 FACILITIES AND ACCREDITATIONS

3.1 FACILITIES

All measurement facilities used to collect the measurement data are located at
1/F, Building E, Fenda Science Park, Sanwei Community, Xixiang Street, Bao'an District, Shenzhen P.R. China.
The sites are constructed in conformance with the requirements of ANSI C63.7, ANSI C63.10 and CISPR Publication 22.

3.2 LABORATORY ACCREDITATIONS AND LISTINGS

Site Description

EMC Lab.	:	Accredited by CNAS, 2014.09.04 The certificate is valid until 2017.09.03 The Laboratory has been assessed and proved to be in compliance with CNAS-CL01:2006 (identical to ISO/IEC 17025:2005) The Certificate Registration Number is L5516. Accredited by Industry Canada, August 29, 2012 The Certificate Registration Number is 9270A-1. Accredited by FCC, September 6, 2013 The Certificate Registration Number is 238937.
Name of Firm	:	NTEK Testing Technology Co., Ltd
Site Location	:	1/F, Building E, Fenda Science Park, Sanwei Community, Xixiang Street, Bao'an District, Shenzhen P.R. China.

3.3 MEASUREMENT UNCERTAINTY

The reported uncertainty of measurement y±U, where expended uncertainty U is based on a standard uncertainty multiplied by a coverage factor of k=2, providing a level of confidence of approximately 95 %.

No.	Item	Uncertainty
1	Conducted Emission Test	±1.38dB
2	RF power, conducted	±0.16dB
3	Spurious emissions, conducted	±0.21dB
4	All emissions, radiated(<1G)	±4.68dB
5	All emissions, radiated(>1G)	±4.89dB
6	Temperature	±0.5°C
7	Humidity	±2%

4 GENERAL DESCRIPTION OF EUT

Product Feature and Specification	
Equipment	2 in 1 tablet PC
Trade Name	vitaLASC
FCC ID	FPW-511AS
Model No.	511
Serial Model	N/A
Model Difference	N/A
Operating Frequency	2402MHz~2480MHz
Modulation	GFSK
Number of Channels	40 Channels
Bluetooth Version	BT v4.0(BLE)
Antenna Type	FPCB Antenna
Antenna Gain	1 dBi
Power supply	☒DC supply: DC 3.7V/8500mAh from Li-ion Battery or DC 5V from DC Port.
	☒Adapter supply: Model:SOY-0500200US Input:100-240V~50-60Hz 0.3A Output:5V 2.0A
HW Version	MS-MB-V100
SW Version	N/A

Note: Based on the application, features, or specification exhibited in User's Manual, the EUT is considered as an ITE/Computing Device. More details of EUT technical specification, please refer to the User's Manual.

Revision History

Report No.	Version	Description	Issued Date
NTEK-2016NT09128878F2	Rev.01	Initial issue of report	Oct 15, 2016

5 DESCRIPTION OF TEST MODES

To investigate the maximum EMI emission characteristics generates from EUT, the test system was pre-scanning tested base on the consideration of following EUT operation mode or test configuration mode which possible have effect on EMI emission level. Each of these EUT operation mode(s) or test configuration mode(s) mentioned above was evaluated respectively.

The Transmitter was operated in the normal operating mode. The TX frequency was fixed which was for the purpose of the measurements.

Test of channel included the lowest and middle and highest frequency to perform the test, then record on this report.

Those data rates (1Mbps for GFSK modulation) were used for all test.

The EUT was pretested with 3 orientations placed on the table for the radiated emission measurement –X, Y, and Z-plane. The X-plane results were found as the worst case and were shown in this report.

Carrier Frequency and Channel list:

Channel	Frequency(MHz)
0	2402
1	2404
…	…
19	2440
20	2442
…	…
38	2478
39	2480

Note: fc=2402MHz+k×2MHz k=0 to 39

The following summary table is showing all test modes to demonstrate in compliance with the standard.

Test Cases	
Test Item	Data Rate/ Modulation
	Bluetooth 4.0_LE / GFSK
AC Conducted Emission	Mode 1: normal link mode
Radiated Test Cases	Mode 1: normal link mode
	Mode 2: Bluetooth Tx Ch00_2402MHz_1Mbps
	Mode 3: Bluetooth Tx Ch19_2440MHz_1Mbps
	Mode 4: Bluetooth Tx Ch39_2480MHz_1Mbps
Conducted Test Cases	Mode 2: Bluetooth Tx Ch00_2402MHz_1Mbps
	Mode 3: Bluetooth Tx Ch19_2440MHz_1Mbps
	Mode 4: Bluetooth Tx Ch39_2480MHz_1Mbps

Note:
1. The engineering test program was provided and the EUT was programmed to be in continuously transmitting mode.
2. AC power line Conducted Emission was tested under maximum output power.
3. For radiated test cases, the worst mode data rate 1Mbps was reported only, because this data rate has the highest RF output power at preliminary tests, and no other significantly frequencies found in conducted spurious emission.
4. EUT built-in battery-powered, fully-charged battery use of the test battery
5. EUT is set to continuous transmission mode. duty cycle greater than 98%.

6 SETUP OF EQUIPMENT UNDER TEST

6.1 BLOCK DIAGRAM CONFIGURATION OF TEST SYSTEM

For AC Conducted Emission Mode

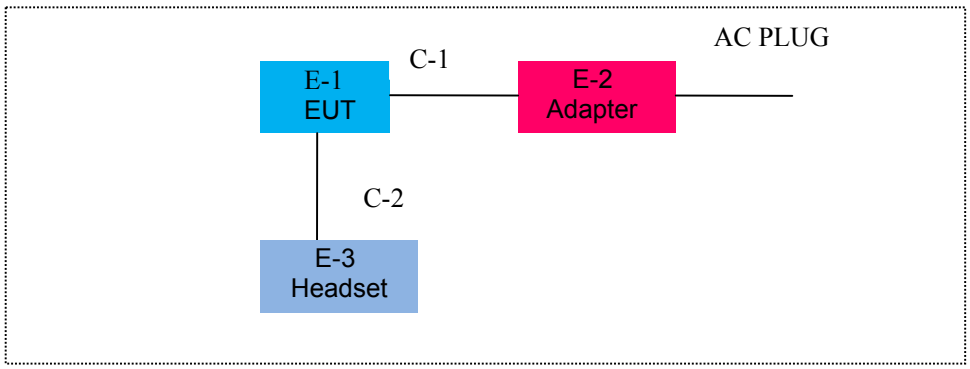

For Radiated Test Cases

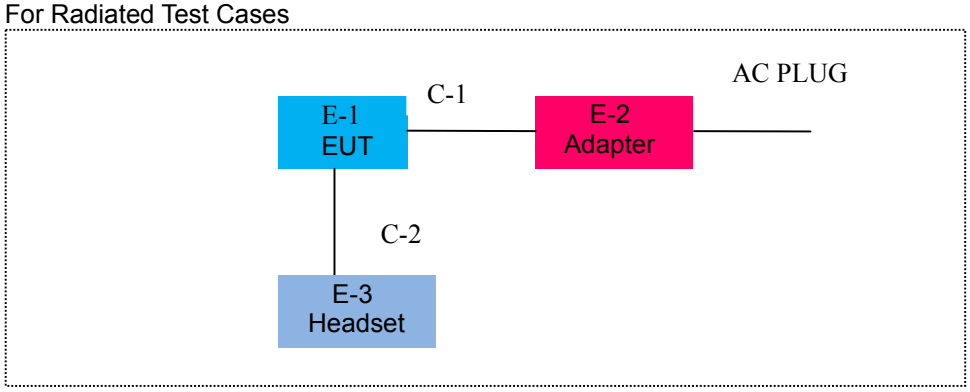

For Conducted Test Cases

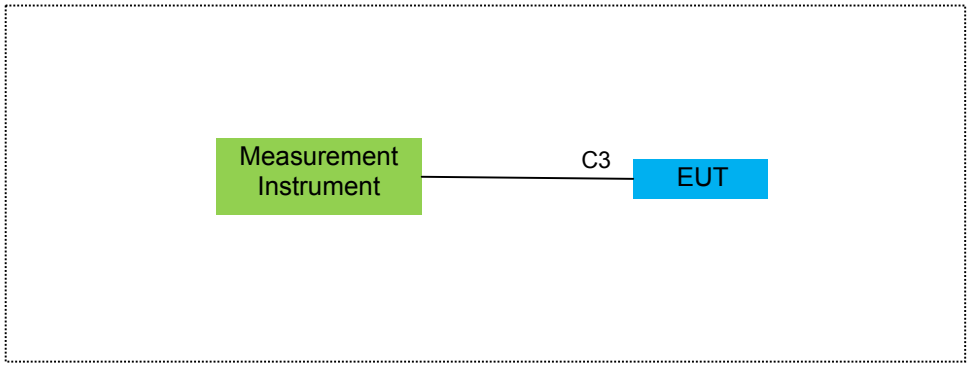

Note:The temporary antenna connector is soldered on the PCB board in order to perform conducted tests and this temporary antenna connector is listed in the equipment list.

6.2 SUPPORT EQUIPMENT

The EUT has been tested as an independent unit together with other necessary accessories or support units. The following support units or accessories were used to form a representative test configuration during the tests.

Item	Equipment	Mfr/Brand	Model/Type No.	FCC ID	Note
E-1	2 in 1 tablet PC	vitaLASC	511	FPW-511AS	EUT
E-2	Adapter	/	SOY-0500200US	N/A	Peripherals
E-3	Headset	SENNHEISER	MX 80	N/A	

Item	Cable Type	Shielded Type	Ferrite Core	Length
C-1	DC Cable	NO	NO	1.2m
C-2	Audio Cable	NO	NO	1.2m
C-3	RF Cable	NO	NO	0.5m

Notes:

(1) The support equipment was authorized by Declaration of Confirmation.
(2) For detachable type I/O cable should be specified the length in cm in『Length』column.
(3) “YES” is means “shielded” “with core”; “NO” is means “unshielded” “without core”.

6.3 EQUIPMENTS LIST FOR ALL TEST ITEMS

Radiation Test equipment

Item	Kind of Equipment	Manufacturer	Type No.	Serial No.	Last calibration	Calibrated until	Calibration period
1	Spectrum Analyzer	Agilent	E4407B	MY45108040	2016.07.06	2017.07.05	1 year
2	EMI Test Receiver	Agilent	N9038A	MY53227146	2016.06.06	2017.06.05	1 year
3	Test Receiver	R&S	ESPI	101318	2016.06.07	2017.06.06	1 year
4	Bilog Antenna	TESEQ	CBL6111D	31216	2016.07.06	2017.07.05	1 year
5	50Ω Coaxial Switch	Anritsu	MP59B	6200264416	2016.06.07	2017.06.06	1 year
6	Spectrum Analyzer	Agilent	N9020A	MY49100060	2016.06.07	2017.06.06	1 year
7	Horn Antenna	EM	EM-AH-10180	2011071402	2016.07.06	2017.07.05	1 year
8	Horn Ant	Schwarzbeck	BBHA 9170	9170-181	2016.07.06	2017.07.05	1 year
9	Amplifier	EM	EM-30180	060538	2015.12.22	2016.12.21	1 year
10	Loop Antenna	ARA	PLA-1030/B	1029	2016.06.08	2017.06.07	1 year
11	Test Cable (9KHz-30MHz)	N/A	R-04	N/A	2016.06.06	2017.06.05	1 year
12	Test Cable (30MHz-1GHz)	N/A	R-01	N/A	2016.07.06	2017.07.05	1 year
13	Test Cable (1-18GHz)	N/A	R-02	N/A	2016.07.06	2017.07.05	1 year
14	High Test Cable(18G-40 GHz)	N/A	R-03	N/A	2016.06.06	2017.06.05	1 year
15	temporary antenna connector (Note)	NTS	R001	N/A	N/A	N/A	N/A

Note:
We will use the temporary antenna connector (soldered on the PCB board) When conducted test
And this temporary antenna connector is listed within the instrument list

Conduction Test equipment

Item	Kind of Equipment	Manufacturer	Type No.	Serial No.	Last calibration	Calibrated until	Calibration period
1	Test Receiver	R&S	ESCI	101160	2016.06.06	2017.06.05	1 year
2	LISN	R&S	ENV216	101313	2016.08.24	2017.08.23	1 year
3	LISN	EMCO	3816/2	00042990	2016.08.24	2017.08.23	1 year
4	50Ω Coaxial Switch	Anritsu	MP59B	6200264417	2016.06.07	2017.06.06	1 year
7	Test Cable (9KHz-30MHz)	N/A	C01	N/A	2016.06.08	2017.06.07	1 year
8	Test Cable (9KHz-30MHz)	N/A	C02	N/A	2016.06.08	2017.06.07	1 year
9	Test Cable (9KHz-30MHz)	N/A	C03	N/A	2016.06.08	2017.06.07	1 year

Note: Each piece of equipment is scheduled for calibration once a year.

7 TEST REQUIREMENTS

7.1 CONDUCTED EMISSIONS TEST

7.1.1 Applicable Standard

According to FCC Part 15.207(a) and KDB 174176 D01 Line Conducted FAQ v01r01

7.1.2 Conformance Limit

Frequency(MHz)	Conducted Emission Limit	
	Quasi-peak	Average
0.15-0.5	66-56*	56-46*
0.5-5.0	56	46
5.0-30.0	60	50

Note: 1. *Decreases with the logarithm of the frequency
2. The lower limit shall apply at the transition frequencies
3. The limit decreases in line with the logarithm of the frequency in the range of 0.15 to 0.50MHz.

7.1.3 Measuring Instruments

The Measuring equipment is listed in the section 6.3 of this test report.

7.1.4 Test Configuration

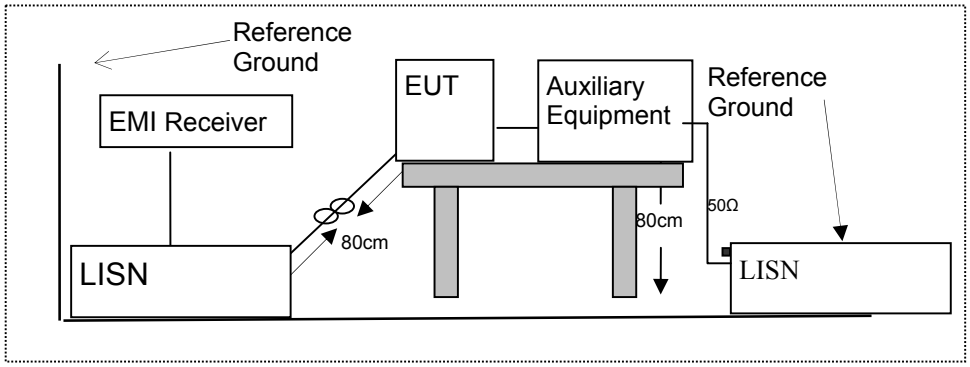

7.1.5 Test Procedure

According to the requirements in Section 13.1.4.1 of ANSI C63.10-2013 Conducted emissions the EUT measured in the frequency range between 0.15 MHz and 30 MHz using CISPR Quasi-Peak and average detector mode.

1. The EUT was placed 0.4 meter from the conducting wall of the shielding room.
2. The EUT was placed on a table which is 0.8m above ground plane.
3. Connect EUT to the power mains through a line impedance stabilization network (LISN). All other support equipments powered from additional LISN(s). The LISN provide 50 Ohm/ 50uH of coupling impedance for the measuring instrument.
4. Interconnecting cables that hang closer than 40 cm to the ground plane shall be folded back and forth in the center forming a bundle 30 to 40cm long.
5. I/O cables that are not connected to a peripheral shall be bundled in the center. The end of the cable may be terminated, if required, using the correct terminating impedance. The overall length shall not exceed 1 m.
6. LISN at least 80 cm from nearest part of EUT chassis.
7. The frequency range from 150KHz to 30MHz was searched.
8. Set the test-receiver system to Peak Detect Function and specified bandwidth(IF bandwidth=9KHz) with Maximum Hold Mode
9. For the actual test configuration, please refer to the related Item –EUT Test Photos.

7.1.6 Test Results

EUT:	2 in 1 tablet PC	Model Name :	511
Temperature:	26 ℃	Relative Humidity:	54%
Pressure:	1010hPa	Phase :	L
Test Voltage :	DC 5.0V form Adapter AC 120V/60Hz	Test Mode:	Mode 1

Frequency (MHz)	Reading Level (dBμV)	Correct Factor (dB)	Measure-ment (dBμV)	Limits (dBμV)	Margin (dB)	Remark
0.158	44.26	10.12	54.38	65.56	-11.18	QP
0.162	31.22	10.12	41.34	55.36	-14.02	AVG
0.2519	42.56	10.14	52.70	61.69	-8.99	QP
0.2519	22.36	10.14	32.50	51.69	-19.19	AVG
0.3462	15.30	10.09	25.39	49.05	-23.66	AVG
0.3618	39.16	10.08	49.24	58.69	-9.45	QP
0.45	36.23	9.93	46.16	56.87	-10.71	QP
0.45	19.57	9.93	29.50	46.87	-17.37	AVG
1.57	20.38	9.81	30.19	46.00	-15.81	AVG
1.5859	38.79	9.81	48.60	56.00	-7.40	QP
7.4778	30.76	9.85	40.61	50.00	-9.39	AVG
7.6017	45.15	9.85	55.00	60.00	-5.00	QP

Remark:
1. All readings are Quasi-Peak and Average values.
2. Factor = Insertion Loss + Cable Loss.

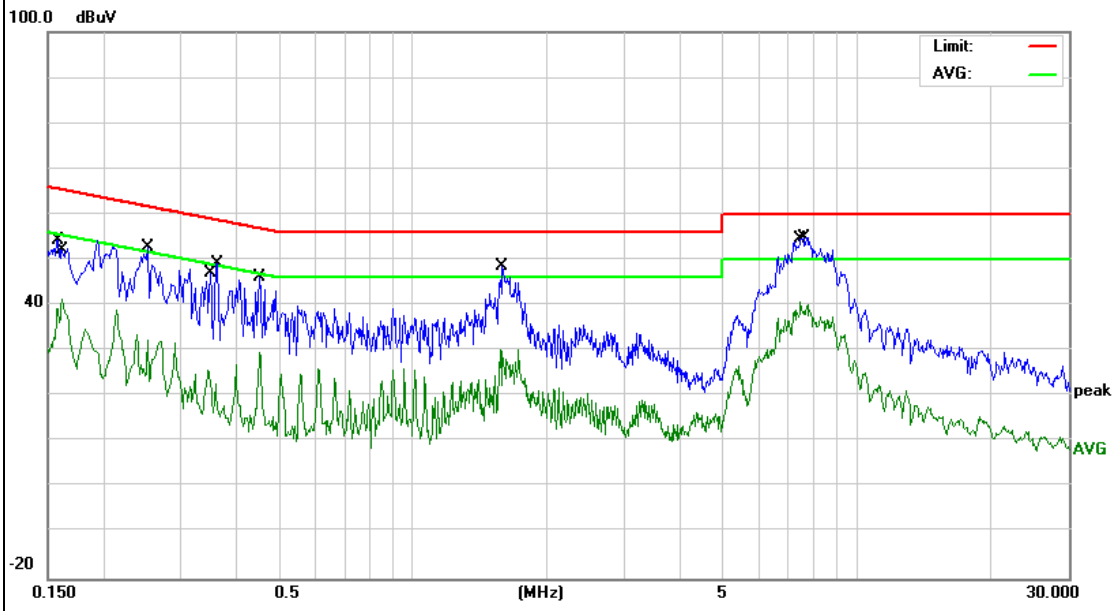

EUT:	2 in 1 tablet PC	Model Name :	511
Temperature:	26 ℃	Relative Humidity:	54%
Pressure:	1010hPa	Phase :	N
Test Voltage :	DC 5.0V form Adapter AC 120V/60Hz	Test Mode:	Mode 1

Frequency (MHz)	Reading Level (dBμV)	Correct Factor (dB)	Measure-ment (dBμV)	Limits (dBμV)	Margin (dB)	Remark
0.166	23.85	10.06	33.91	55.15	-21.24	AVG
0.17	46.76	10.06	56.82	64.96	-8.14	QP
0.2139	30.43	10.04	40.47	53.05	-12.58	AVG
0.2149	46.16	10.04	56.20	63.01	-6.81	QP
0.2862	15.72	10.11	25.83	50.63	-24.80	AVG
0.2899	38.35	10.12	48.47	60.52	-12.05	QP
0.3539	37.82	10.09	47.91	58.87	-10.96	QP
0.3539	12.52	10.09	22.61	48.87	-26.26	AVG
1.622	37.87	9.83	47.70	56.00	-8.30	QP
1.622	20.77	9.83	30.60	46.00	-15.40	AVG
7.3859	32.83	9.82	42.65	50.00	-7.35	AVG
7.4819	44.28	9.82	54.10	60.00	-5.90	QP

Remark:

1. All readings are Quasi-Peak and Average values.
2. Factor = Insertion Loss + Cable Loss.

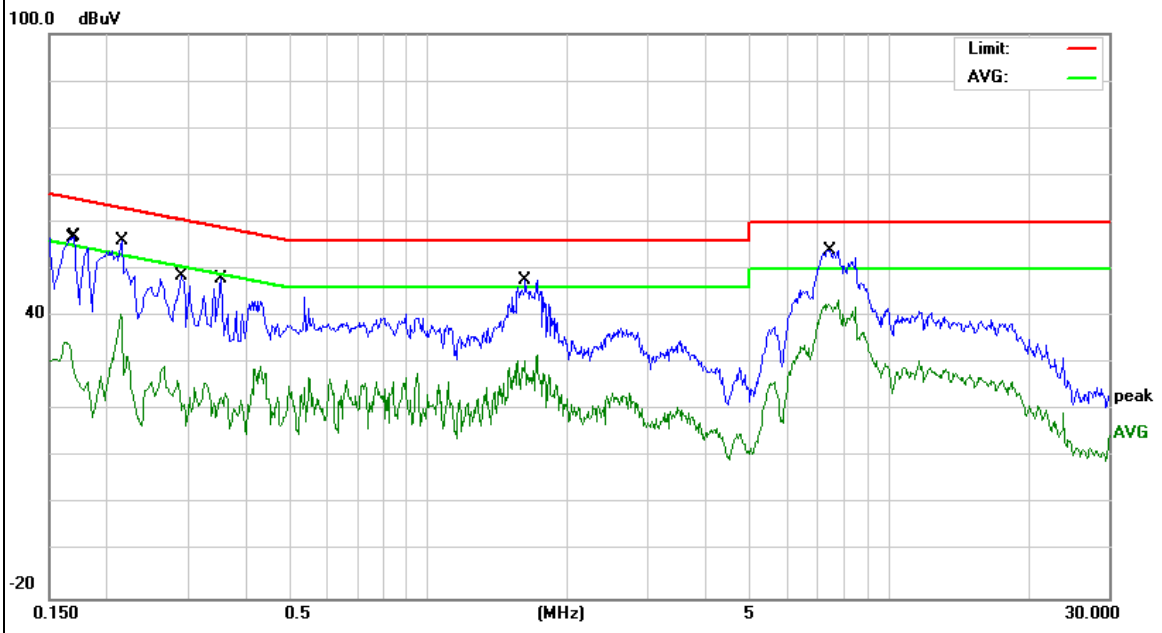

EUT:	2 in 1 tablet PC	Model Name :	511
Temperature:	26 ℃	Relative Humidity:	54%
Pressure:	1010hPa	Phase :	L
Test Voltage :	DC 5.0V form Adapter AC 240V/60Hz	Test Mode:	Mode 1

Frequency (MHz)	Reading Level (dBμV)	Correct Factor (dB)	Measure-ment (dBμV)	Limits (dBμV)	Margin (dB)	Remark
0.162	42.58	10.12	52.70	65.36	-12.66	QP
0.162	31.62	10.12	41.74	55.36	-13.62	AVG
0.2179	29.20	10.13	39.33	52.89	-13.56	AVG
0.2195	39.47	10.13	49.60	62.83	-13.23	QP
0.244	23.36	10.13	33.49	51.96	-18.47	AVG
0.2442	39.31	10.13	49.44	61.95	-12.51	QP
0.45	36.23	9.93	46.16	56.87	-10.71	QP
0.45	19.57	9.93	29.50	46.87	-17.37	AVG
1.677	35.90	9.80	45.70	56.00	-10.30	QP
1.6777	17.59	9.80	27.39	46.00	-18.61	AVG
7.8898	42.74	9.86	52.60	60.00	-7.40	QP
7.8898	28.49	9.86	38.35	50.00	-11.65	AVG

Remark:

1. All readings are Quasi-Peak and Average values.
2. Factor = Insertion Loss + Cable Loss.

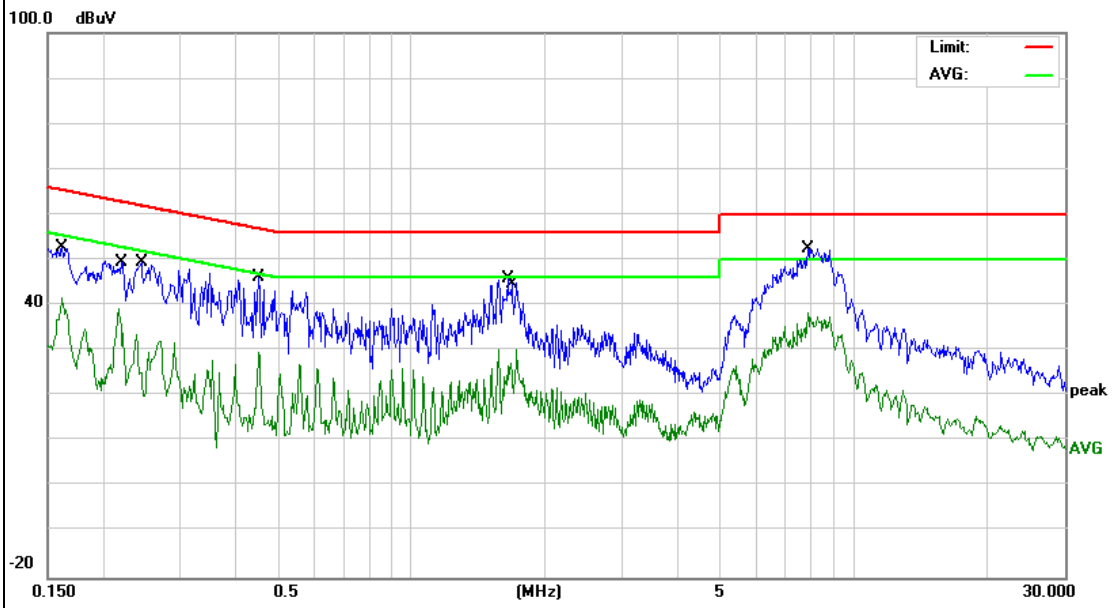

EUT:	2 in 1 tablet PC	Model Name :	511
Temperature:	26 ℃	Relative Humidity:	54%
Pressure:	1010hPa	Phase :	N
Test Voltage :	DC 5.0V form Adapter AC 240V/60Hz	Test Mode:	Mode 1

Frequency	Reading Level	Correct Factor	Measure-ment	Limits	Margin	Remark
(MHz)	(dBμV)	(dB)	(dBμV)	(dBμV)	(dB)	
0.162	24.45	10.07	34.52	55.36	-20.84	AVG
0.1632	45.22	10.06	55.28	65.29	-10.01	QP
0.1833	46.16	10.04	56.20	64.33	-8.13	QP
0.1859	21.73	10.04	31.77	54.21	-22.44	AVG
0.2058	44.03	10.03	54.06	63.37	-9.31	QP
0.2071	21.56	10.03	31.59	53.32	-21.73	AVG
0.3537	37.82	10.09	47.91	58.87	-10.96	QP
0.3537	12.52	10.09	22.61	48.87	-26.26	AVG
1.622	37.47	9.83	47.30	56.00	-8.70	QP
1.622	20.37	9.83	30.20	46.00	-15.80	AVG
8.16	32.43	9.84	42.27	50.00	-7.73	AVG
8.1617	42.96	9.84	52.80	60.00	-7.20	QP

Remark:

1. All readings are Quasi-Peak and Average values.
2. Factor = Insertion Loss + Cable Loss.

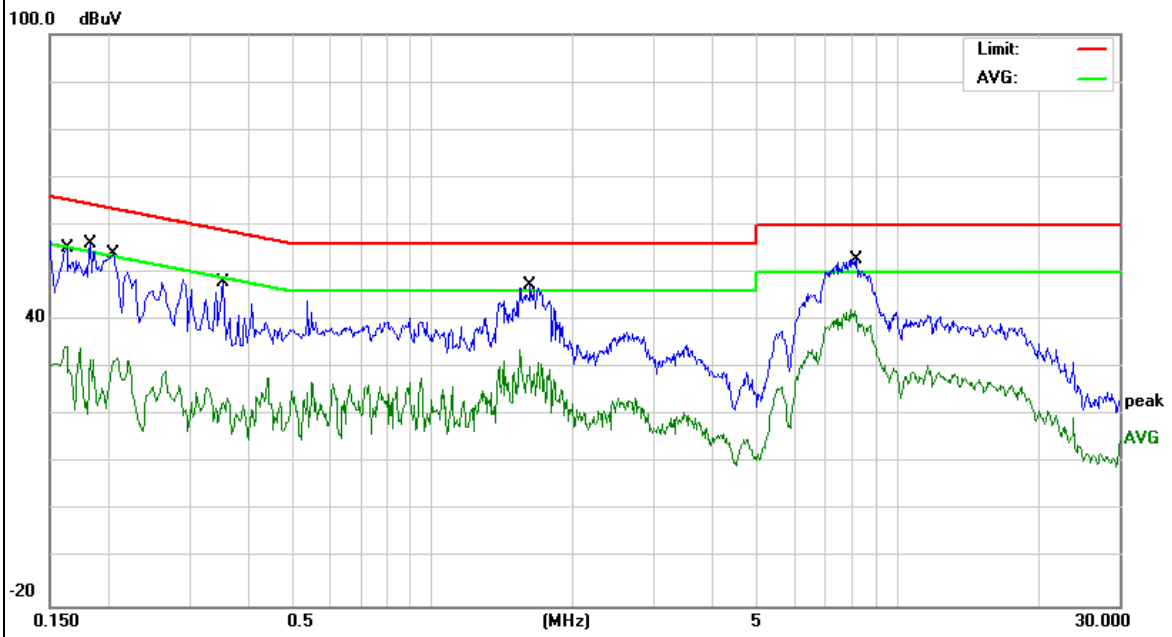

7.2 RADIATED SPURIOUS EMISSION

7.2.1 Applicable Standard

According to FCC Part 15.247(d) and 15.209 and ANSI C63.10-2013

7.2.2 Conformance Limit

According to FCC Part 15.247(d): radiated emissions which fall in the restricted bands, as defined in §15.205(a), must also comply with the radiated emission limits specified in §15.209(a) (see §15.205(c)).
According to FCC Part15.205, Restricted bands

MHz	MHz	MHz	GHz
0.090-0.110	16.42-16.423	399.9-410	4.5-5.15
10.495-0.505	16.69475-16.69525	608-614	5.35-5.46
2.1735-2.1905	16.80425-16.80475	960-1240	7.25-7.75
4.125-4.128	25.5-25.67	1300-1427	8.025-8.5
4.17725-4.17775	37.5-38.25	1435-1626.5	9.0-9.2
4.20725-4.20775	73-74.6	1645.5-1646.5	9.3-9.5
6.215-6.218	74.8-75.2	1660-1710	10.6-12.7
6.26775-6.26825	123-138	2200-2300	14.47-14.5
8.291-8.294	149.9-150.05	2310-2390	15.35-16.2
8.362-8.366	156.52475-156.52525	2483.5-2500	17.7-21.4
8.37625-8.38675	156.7-156.9	2690-2900	22.01-23.12
8.41425-8.41475	162.0125-167.17	3260-3267	23.6-24.0
12.29-12.293	167.72-173.2	3332-3339	31.2-31.8
12.51975-12.52025	240-285	3345.8-3358	36.43-36.5
12.57675-12.57725	322-335.4	3600-4400	(2)
13.36-13.41			

20dBc in any 100 kHz bandwidth outside the operating frequency band. In case the emission fall within the restricted band specified on 15.205(a), then the 15.209(a) limit in the table below has to be followed.

Restricted Frequency(MHz)	Field Strength (μV/m)	Field Strength (dBμV/m)	Measurement Distance
0.009~0.490	2400/F(KHz)	20 log (uV/m)	300
0.490~1.705	2400/F(KHz)	20 log (uV/m)	30
1.705~30.0	30	29.5	30
30-88	100	40	3
88-216	150	43.5	3
216-960	200	46	3
Above 960	500	54	3

Limits of Radiated Emission Measurement(Above 1000MHz)

Frequency(MHz)	Class B (dBuV/m) (at 3M)	
	PEAK	AVERAGE
Above 1000	74	54

Remark :1. Emission level in dBuV/m=20 log (uV/m)
2. Measurement was performed at an antenna to the closed point of EUT distance of meters.
3. Distance extrapolation factor =40log(Specific distance/ test distance)(dB);
Limit line=Specific limits(dBuV) + distance extrapolation factor.

7.2.3 Measuring Instruments

The Measuring equipment is listed in the section 6.3 of this test report.

7.2.4 Test Configuration

(a) For radiated emissions below 30MHz

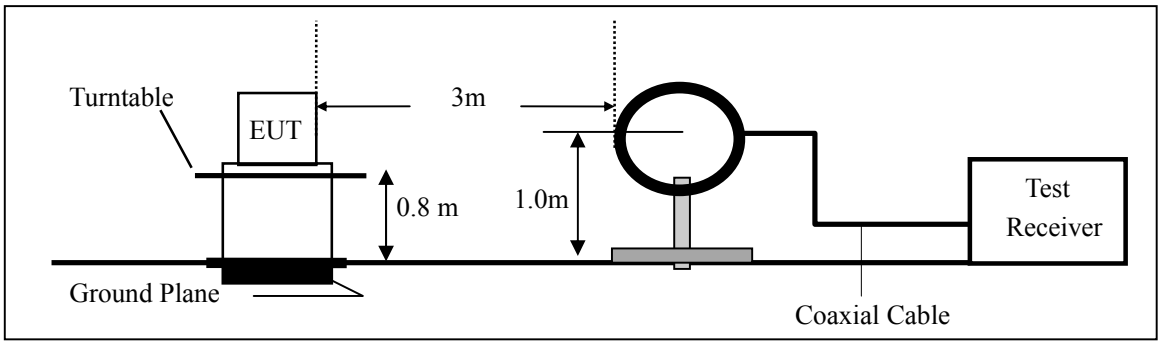

(b) For radiated emissions from 30MHz to 1000MHz

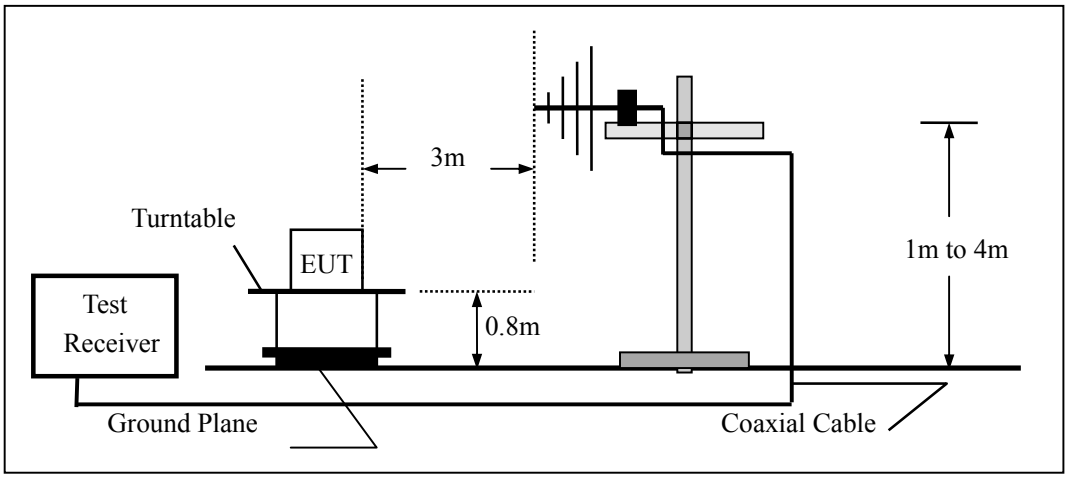

(c) For radiated emissions above 1000MHz

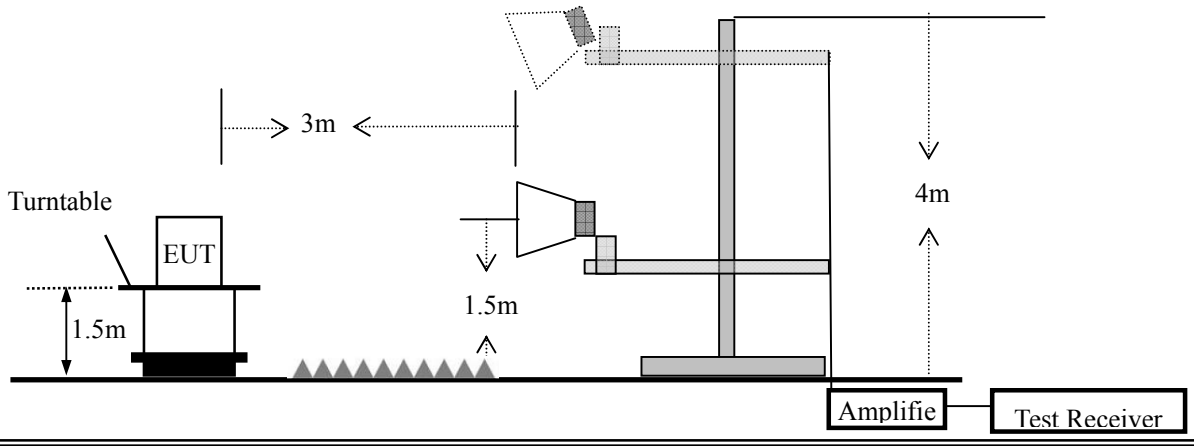

7.2.5 Test Procedure

The test site semi-anechoic chamber has met the requirement of NSA tolerance 4 dB according to the standards: ANSI C63.10-2013. The test distance is 3m.The setup is according to the requirements in Section 13.1.4.1 of ANSI C63.10-2013 and CAN/CSA-CEI/IEC CISPR 22.
This test is required for any spurious emission that falls in a Restricted Band, as defined in Section 15.205. It must be performed with the highest gain of each type of antenna proposed for use with the EUT.
Use the following spectrum analyzer settings:

Spectrum Parameter	Setting
Attenuation	Auto
Start Frequency	1000 MHz
Stop Frequency	10th carrier harmonic
RB / VB (emission in restricted band)	1 MHz / 1 MHz for Peak, 1 MHz / 10Hz for Average

Receiver Parameter	Setting
Attenuation	Auto
Start ~ Stop Frequency	9kHz~150kHz / RB 200Hz for QP
Start ~ Stop Frequency	150kHz~30MHz / RB 9kHz for QP
Start ~ Stop Frequency	30MHz~1000MHz / RB 120kHz for QP

a. The measuring distance of at 3 m shall be used for measurements at frequency up to 1GHz. For frequencies above 1GHz, any suitable measuring distance may be used.
b. The EUT was placed on the top of a rotating table 0.8 m for below 1GHz and 1.5m for above 1GHz the ground at a 3 meter. The table was rotated 360 degrees to determine the position of the highest radiation.
c. The height of the equipment or of the substitution antenna shall be 0.8 m for below 1GHz and 1.5m for above 1GHz; the height of the test antenna shall vary between 1 m to 4 m. Both horizontal and vertical polarizations of the antenna are set to make the measurement.
d. For the radiated emission test above 1GHz:
Place the measurement antenna away from each area of the EUT determined to be a source of emissions at the specified measurement distance, while keeping the measurement antenna aimed at the source of emissions at each frequency of significant emissions, with polarization oriented for maximum response. The measurement antenna may have to be higher or lower than the EUT, depending on the radiation pattern of the emission and staying aimed at the emission source for receiving the maximum signal. The final measurement antenna elevation shall be that which maximizes the emissions. The measurement antenna elevation for maximum emissions shall be restricted to a range of heights of from 1 m to 4 m above the ground or reference ground plane.
e. The initial step in collecting conducted emission data is a spectrum analyzer peak detector mode pre-scanning the measurement frequency range. Significant peaks are then marked and then Quasi Peak detector mode re-measured.
f. If the Peak Mode measured value compliance with and lower than Quasi Peak Mode Limit, the EUT shall be deemed to meet QP Limits and then no additional QP Mode measurement performed.
g. For the actual test configuration, please refer to the related Item –EUT Test Photos.

Note:

Both horizontal and vertical antenna polarities were tested
and performed pretest to three orthogonal axis. The worst case emissions were reported

During the radiated emission test, the Spectrum Analyzer was set with the following configurations:

Frequency Band (MHz)	Function	Resolution bandwidth	Video Bandwidth
30 to 1000	QP	120 kHz	300 kHz
Above 1000	Peak	1 MHz	1 MHz
	Average	1 MHz	10 Hz

Note: for the frequency ranges below 30 MHz, a narrower RBW is used for these ranges but the measured value should add a RBW correction factor (RBWCF) where RBWCF [dB] =10*lg(100 [kHz]/narrower RBW [kHz]). , the narrower RBW is 1 kHz and RBWCF is 20 dB for the frequency 9 kHz to 150 kHz, and the narrower RBW is 10 kHz and RBWCF is 10 dB for the frequency 150 kHz to 30 MHz.

7.2.6 Test Results

■ Spurious Emission below 30MHz (9KHz to 30MHz)

EUT:	2 in 1 tablet PC	Model No.:	511
Temperature:	20 ℃	Relative Humidity:	48%
Test Mode:	Mode2/Mode3/Mode4	Test By:	Lake Xie

Freq. (MHz)	Ant.Pol. H/V	Emission Level(dBuV/m)		Limit 3m(dBuV/m)		Over(dB)	
		PK	AV	PK	AV	PK	AV
--	--	--	--	--	--	--	--

Note: the amplitude of spurious emission that is attenuated by more than 20dB below the permissible limit has no need to be reported.
Distance extrapolation factor =20log(Specific distance/ test distance)(dB);
Limit line=Specific limits(dBuV) + distance extrapolation factor

■ Spurious Emission below 1GHz (30MHz to 1GHz)
All the modulation modes have been tested, and the worst result was report as below:

EUT:	2 in 1 tablet PC	Model Name :	511
Temperature:	20 ℃	Relative Humidity:	48%
Pressure:	1010hPa	Test Mode:	Mode 1
Test Voltage :	DC 5.0V form Adapter AC 120V/60Hz		

Polar (H/V)	Frequency (MHz)	Meter Reading (dBuV)	Factor (dB)	Emission Level (dBuV/m)	Limits (dBuV/m)	Margin (dB)	Remark
V	30.8535	11.26	19.94	31.2	40	-8.8	QP
V	43.3534	20.07	13.62	33.69	40	-6.31	QP
V	72.0841	23.71	10.54	34.25	40	-5.75	QP
V	108.647	24.01	11.31	35.32	43.5	-8.18	QP
V	135.9822	24.52	12.06	36.58	43.5	-6.92	QP
V	155.3643	25.33	12.92	38.25	43.5	-5.25	QP

Remark:
Absolute Level= ReadingLevel+ Factor, Margin= Absolute Level - Limit

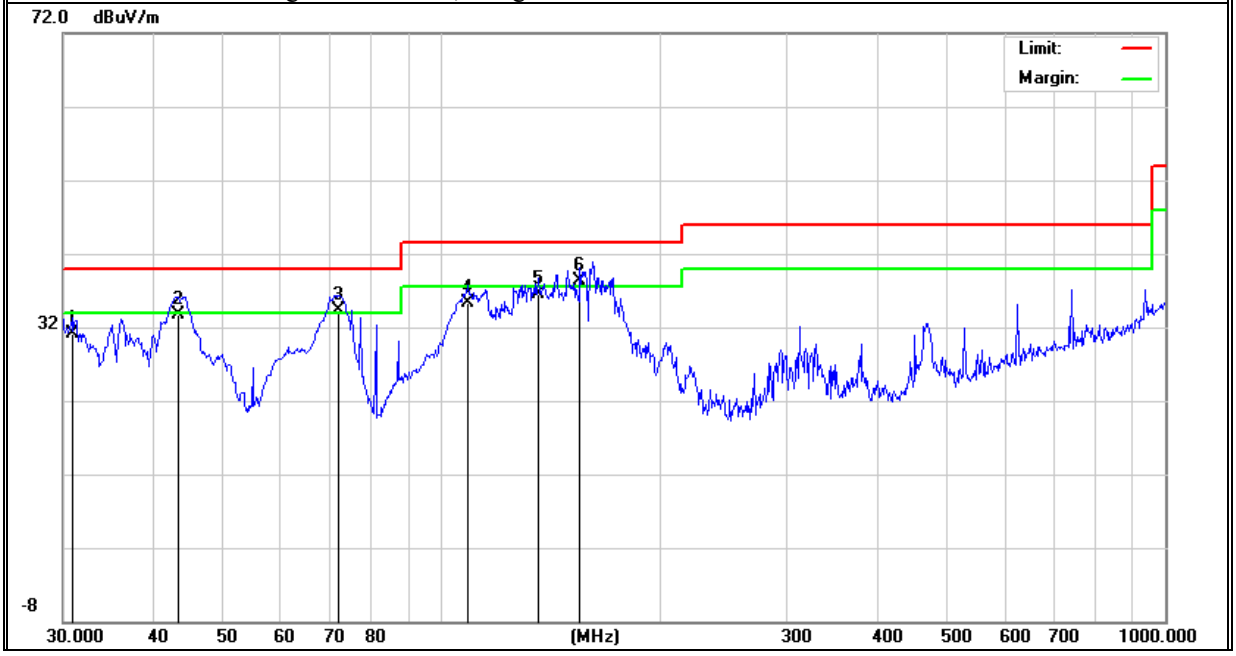

Polar (H/V)	Frequency	Meter Reading	Factor	Emission Level	Limits	Margin	Remark
	(MHz)	(dBuV)	(dB)	(dBuV/m)	(dBuV/m)	(dB)	
H	46.8303	16.59	11.01	27.6	40	-12.4	QP
H	75.1821	22.7	10.55	33.25	40	-6.75	QP
H	103.4419	23.93	11.3	35.23	43.5	-8.27	QP
H	137.9028	27.48	12.08	39.56	43.5	-3.94	QP
H	175.6516	26.12	13.44	39.56	43.5	-3.94	QP
H	216.0240	20.41	12.27	32.68	46.0	-13.32	QP

Remark:
Absolute Level= ReadingLevel+ Factor, Margin= Absolute Level - Limit

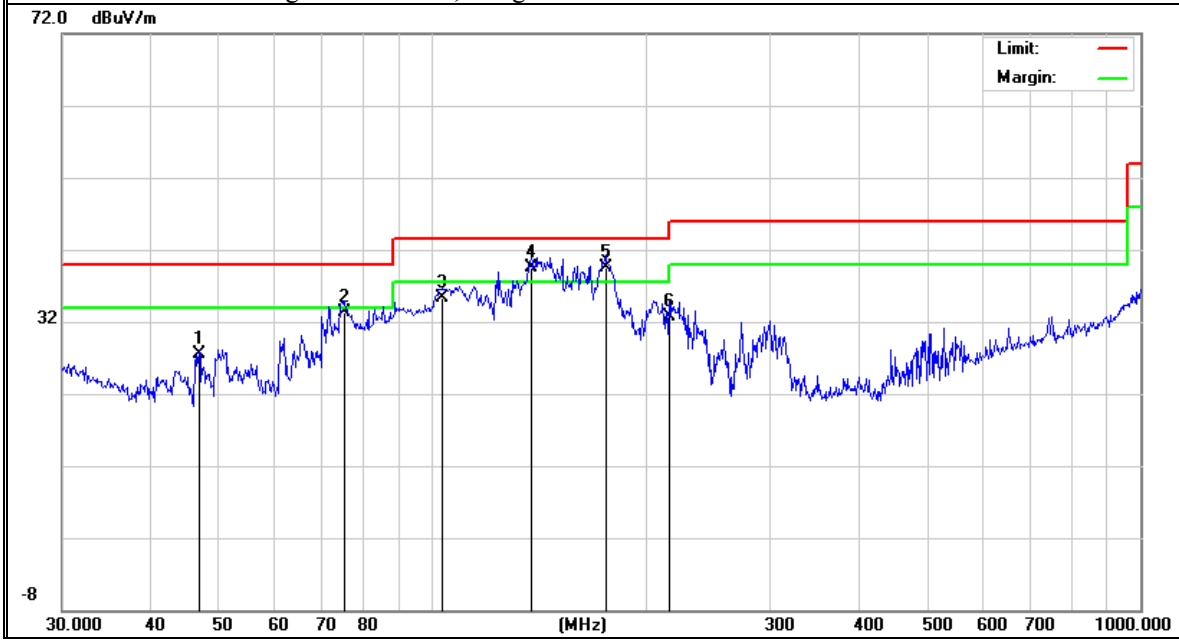

■ Spurious Emission Above 1GHz (1GHz to 25GHz)

EUT:	2 in 1 tablet PC	Model No.:	511
Temperature:	20 ℃	Relative Humidity:	48%
Test Mode:	Mode2/Mode3/Mode4	Test By:	Lake Xie

Frequency (MHz)	Read Level (dBμV)	Cable loss (dB)	Antenna Factor dB/m	Preamp Factor (dB)	Emission Level (dBμV/m)	Limits (dBμV/m)	Margin (dB)	Remark	Comment
Low Channel (2402 MHz)-Above 1G									
4804	57.90	5.21	35.59	44.30	54.40	74.00	-19.60	Pk	Vertical
4804	43.67	5.21	35.59	44.30	40.17	54.00	-13.83	AV	Vertical
7206	50.55	6.48	36.27	44.60	48.70	74.00	-25.30	Pk	Vertical
7206	42.36	6.48	36.27	44.60	40.51	54.00	-13.49	AV	Vertical
4804	52.31	5.21	35.55	44.30	48.77	74.00	-25.23	Pk	Horizontal
4804	40.26	5.21	35.55	44.30	36.72	54.00	-17.28	AV	Horizontal
7206	53.81	6.48	36.27	44.52	52.04	74.00	-21.96	Pk	Horizontal
7206	42.98	6.48	36.27	44.52	41.21	54.00	-12.79	AV	Horizontal
Mid Channel (2440 MHz)-Above 1G									
4880	56.86	5.21	35.66	44.20	53.53	74.00	-20.47	Pk	Vertical
4880	43.85	5.21	35.66	44.20	40.52	54.00	-13.48	AV	Vertical
7320	50.01	7.10	36.50	44.43	49.18	74.00	-24.82	Pk	Vertical
7320	42.39	7.10	36.50	44.43	41.56	54.00	-12.44	AV	Vertical
4880	51.74	5.21	35.66	44.20	48.41	74.00	-25.59	Pk	Horizontal
4880	41.10	5.21	35.66	44.20	37.77	54.00	-16.23	AV	Horizontal
7320	53.26	7.10	36.50	44.43	52.43	74.00	-21.57	Pk	Horizontal
7320	41.80	7.10	36.50	44.43	40.97	54.00	-13.03	AV	Horizontal
High Channel (2480 MHz)- Above 1G									
4960	54.27	5.21	35.52	44.21	50.79	74.00	-23.21	Pk	Vertical
4960	43.15	5.21	35.52	44.21	39.67	54.00	-14.33	AV	Vertical
7440	54.21	7.10	36.53	44.60	53.24	74.00	-20.76	Pk	Vertical
7440	43.20	7.10	36.53	44.60	42.23	54.00	-11.77	AV	Vertical
4960	53.85	5.21	35.52	44.21	50.37	74.00	-23.63	Pk	Horizontal
4960	43.20	5.21	35.52	44.21	39.72	54.00	-14.28	AV	Horizontal
7440	53.19	7.10	36.53	44.60	52.22	74.00	-21.78	Pk	Horizontal
7440	40.38	7.10	36.53	44.60	39.41	54.00	-14.59	AV	Horizontal

Note: (1) All Readings are Peak Value (VBW=3MHz) and AV Value (VBW=10Hz).
(2) Emission Level= Antenna Factor + Cable Loss + Read Level - Preamp Factor
(3)All other emissions more than 20dB below the limit.

■ Spurious Emission in Restricted Band 2310-2390MHz and 2483.5-2500MHz

EUT:	2 in 1 tablet PC	Model No.:	511
Temperature:	20 ℃	Relative Humidity:	48%
Test Mode:	Mode2 /Mode4	Test By:	Lake Xie

All the modulation modes were tested, the data of the worst mode are described in the following table

Frequency (MHz)	Meter Reading (dBμV)	Cable Loss (dB)	Antenna Factor dB/m	Preamp Factor (dB)	Emission Level (dBμV/m)	Limits (dBμV/m)	Margin (dB)	Detector Type	Comment
1Mbps									
2390.00	54.75	3.14	27.21	43.80	41.30	74	-32.70	Pk	Vertical
2390.00	42.03	3.14	27.21	43.80	28.58	54	-25.42	AV	Vertical
2390.00	51.44	3.14	27.21	43.80	37.99	74	-36.01	Pk	Horizontal
2390.00	44.04	3.14	27.21	43.80	30.59	54	-23.41	AV	Horizontal
2483.50	54.24	3.58	27.70	44.00	41.52	74	-32.48	Pk	Vertical
2483.50	43.49	3.58	27.70	44.00	30.77	54	-23.23	AV	Vertical
2483.50	51.42	3.58	27.70	44.00	38.70	74	-35.30	Pk	Horizontal
2483.50	44.12	3.58	27.70	44.00	31.40	54	-22.60	AV	Horizontal

Note: (1) All other emissions more than 20dB below the limit.

■ Spurious Emission in Restricted Band 3260MMHz-18000MHz

EUT:	2 in 1 tablet PC	Model No.:	511
Temperature:	20 ℃	Relative Humidity:	48%
Test Mode:	Mode2 /Mode4	Test By:	Lake Xie

All the modulation modes have been tested, and the worst result was report as below:

Frequency	Reading Level	Cable Loss	Antenna Factor	Preamp Factor	Emission Level	Limits	Margin	Detector	Comment
(MHz)	(dBμV)	(dB)	dB/m	(dB)	(dBμV/m)	(dBμV/m)	(dB)	Type	
3260.00	63.63	4.04	29.57	44.70	52.54	74	-21.46	Pk	Vertical
3260.00	56.83	4.04	29.57	44.70	45.74	54	-8.26	AV	Vertical
3260.00	62.67	4.04	29.57	44.70	51.58	74	-22.42	Pk	Horizontal
3260.00	55.66	4.04	29.57	44.70	44.57	54	-9.43	AV	Horizontal
3332.00	61.94	4.26	29.87	44.40	51.67	74	-22.33	Pk	Vertical
3332.00	56.38	4.26	29.87	44.40	46.11	54	-7.89	AV	Vertical
3332.00	64.50	4.26	29.87	44.40	54.23	74	-19.77	Pk	Horizontal
3332.00	55.10	4.26	29.87	44.40	44.83	54	-9.17	AV	Horizontal
17789.00	59.51	10.99	43.95	43.50	70.95	74	-3.05	Pk	Vertical
17789.00	53.11	10.99	43.95	43.50	64.55	54	10.55	AV	Vertical
17957.00	57.68	11.81	43.69	44.60	68.58	74	-5.42	Pk	Horizontal
17957.00	54.13	11.81	43.69	44.60	65.03	54	11.03	AV	Horizontal

Note: (1) All other emissions more than 20dB below the limit.

7.3 6DB BANDWIDTH

7.3.1 Applicable Standard

According to FCC Part 15.247(a)(2) and KDB 558074 DTS 01 Meas. Guidance v03r05

7.3.2 Conformance Limit

The minimum permissible 6dB bandwidth is 500 kHz.

7.3.3 Measuring Instruments

The Measuring equipment is listed in the section 6.3 of this test report.

7.3.4 Test Setup

Please refer to Section 6.1 of this test report.

7.3.5 Test Procedure

The testing follows KDB 558074 DTS 01 Meas. Guidance v03r05
The RF output of EUT was connected to the spectrum analyzer by RF cable and attenuator.
The path loss was compensated to the results for each measurement.
Set to the maximum power setting and enable the EUT transmit continuously.
The EUT was operating in controlled its channel.
Use the following spectrum analyzer settings:
Span = the frequency band of operation
RBW = 100KHz
VBW ≥ 3*RBW
Sweep = auto
Detector function = peak
Trace = max hold

7.3.6 Test Results

EUT:	2 in 1 tablet PC	Model No.:	511
Temperature:	20 ℃	Relative Humidity:	48%
Test Mode:	Mode2/Mode3/Mode4	Test By:	Lake Xie

Channel	Frequency (MHz)	6dB bandwidth (kHz)	Limit (kHz)	Result
Low	2402	682.8	500	Pass
Middle	2440	681.6	500	Pass
High	2480	682.2	500	Pass

6dB Bandwidth plot on channel 00	1Mbps

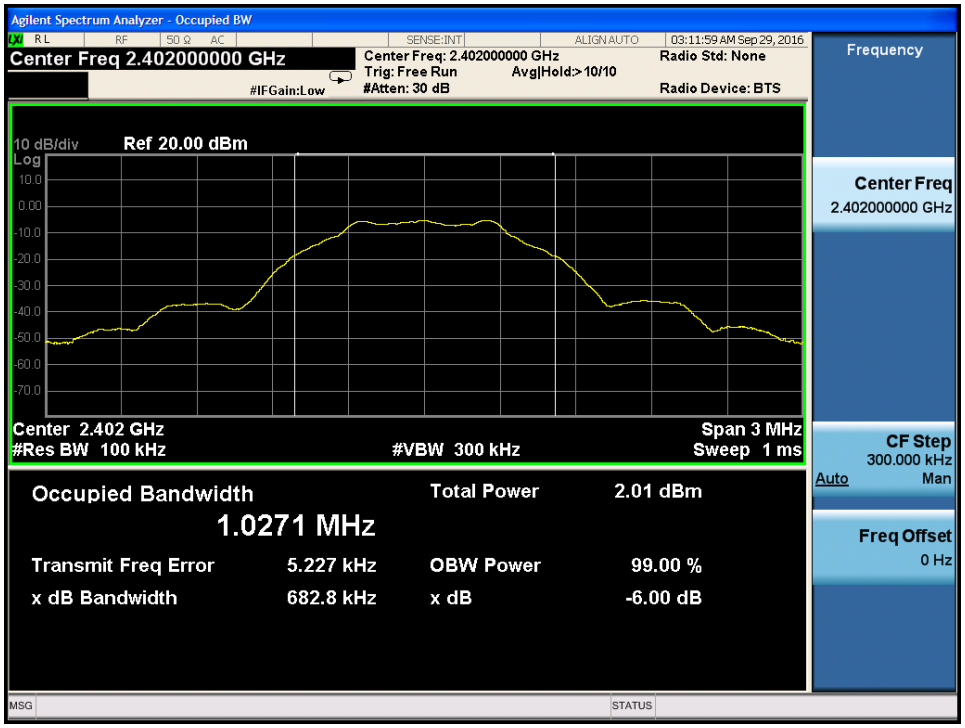

6dB Bandwidth plot on channel 19	1Mbps

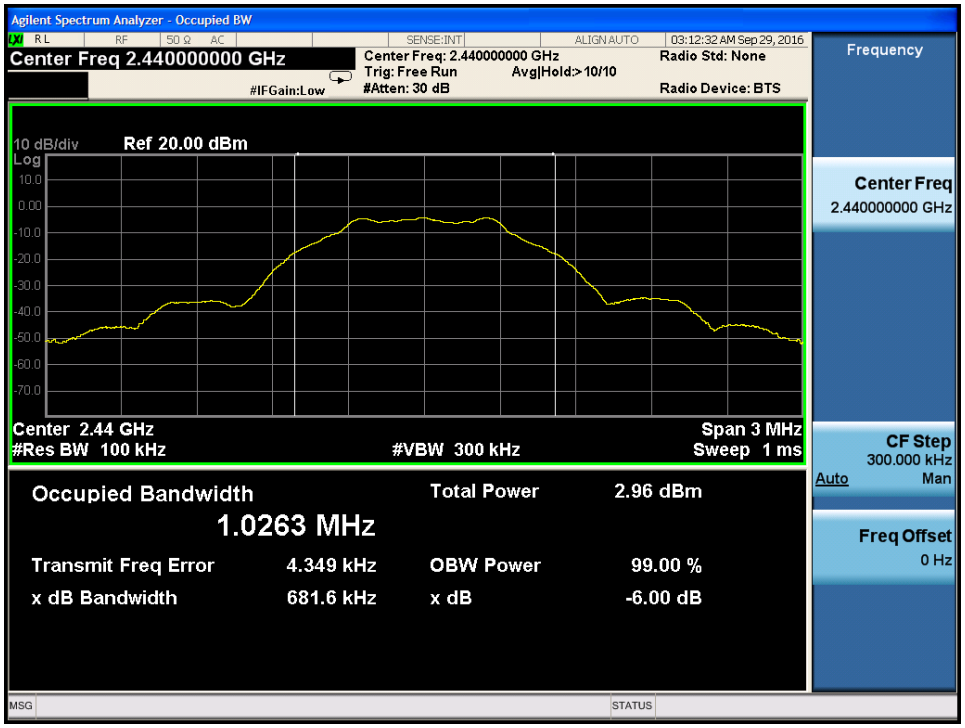

6dB Bandwidth plot on channel 39	1Mbps

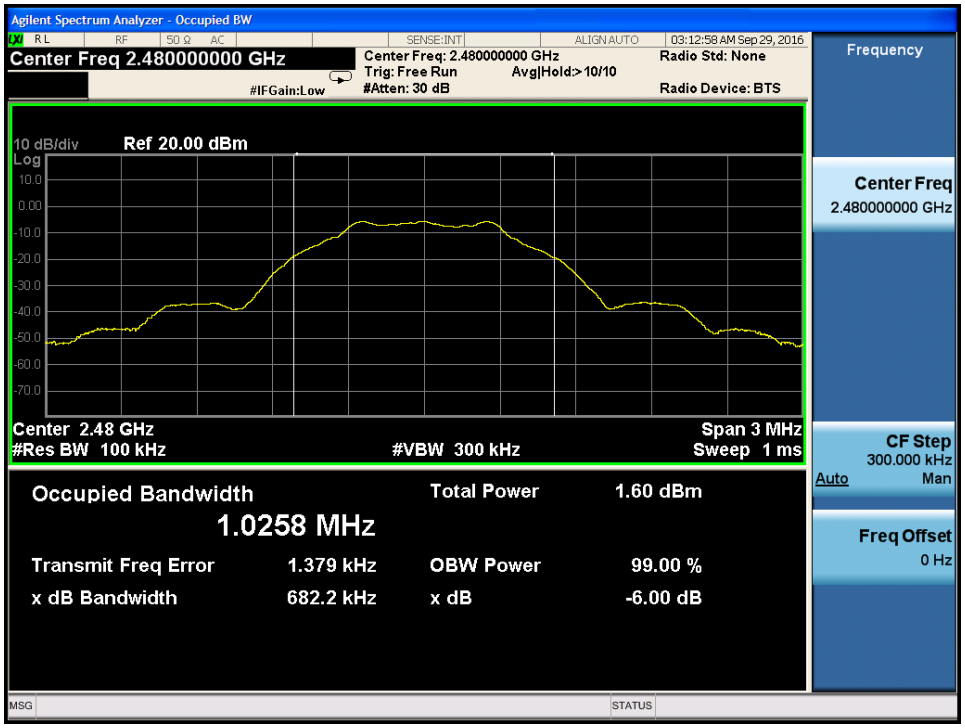

7.4 PEAK OUTPUT POWER

7.4.1 Applicable Standard

According to FCC Part 15.247(b)(3) and KDB 558074 DTS 01 Meas. Guidance v03r05

7.4.2 Conformance Limit

The maximum peak conducted output power of the intentional radiator for systems using digital modulation in the 2400 - 2483.5 MHz bands shall not exceed: 1 Watt (30dBm). If transmitting antenna of directional gain greater than 6dBi is used, the peak output power from the intentional radiator shall be reduced below the above stated value by the amount in dB that the directional gain of the antenna exceeds 6 dBi. In case of point-to-point operation, the limit has to be reduced by 1dB for every 3dB that the directional gain of the antenna exceeds 6dBi.

7.4.3 Measuring Instruments

The Measuring equipment is listed in the section 6.3 of this test report.

7.4.4 Test Setup

Please refer to Section 6.1 of this test report.

7.4.5 Test Procedure

The testing follows KDB 558074 DTS 01 Meas. Guidance v03r05
The RF output of EUT was connected to the spectrum analyzer by RF cable and attenuator.
The path loss was compensated to the results for each measurement.
Set to the maximum power setting and enable the EUT transmit continuously.
The EUT was operating in controlled its channel.
Use the following spectrum analyzer settings:
Set the RBW ≧DTS bandwidth(about 1MHz).
Set VBW =3*RBW(about 3MHz)
Set the span ≧3*RBW
Set Sweep time = auto couple.
Set Detector = peak.
Set Trace mode = max hold.
Allow trace to fully stabilize.
Use peak marker function to determine the peak amplitude level.

7.4.6 Test Results

EUT:	2 in 1 tablet PC	Model No.:	511
Temperature:	20 ℃	Relative Humidity:	48%
Test Mode:	Mode2/Mode3/Mode4	Test By:	Lake Xie

Test Channel	Frequency (MHz)	Power Setting	Peak Output Power (dBm)	LIMIT (dBm)	Verdict
1Mbps					
00	2402	Default	-4.224	30	PASS
19	2440	Default	-3.27	30	PASS
39	2480	Default	-4.653	30	PASS

Peak output Power plot on channel 00	1Mbps

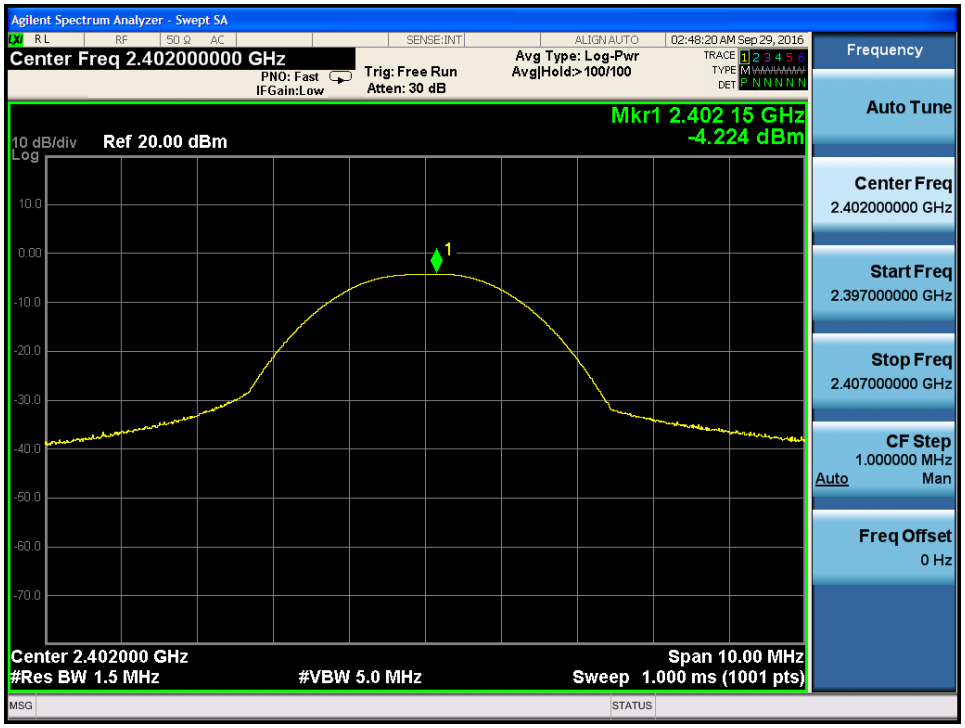

Peak output Power plot on channel 19	1Mbps

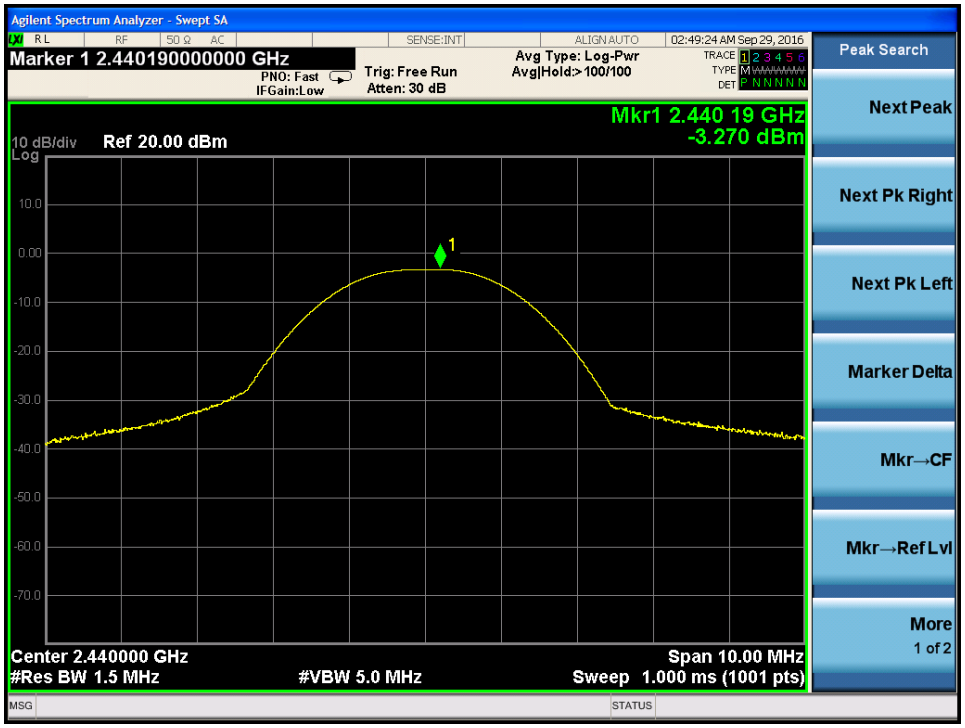

Peak output Power plot on channel 39	1Mbps

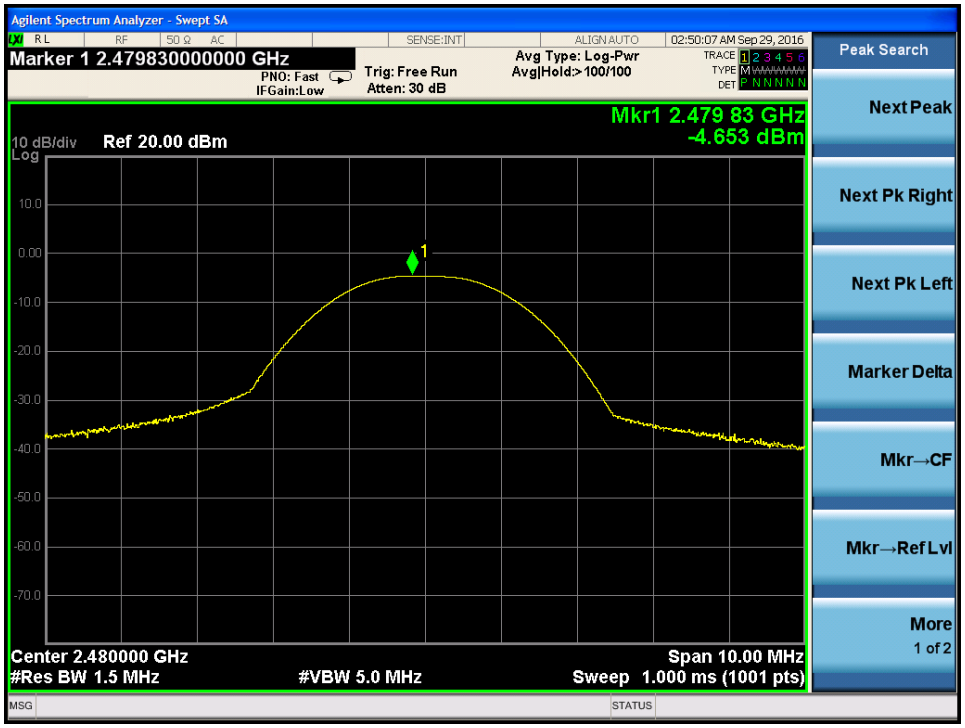

7.5 POWER SPECTRAL DENSITY

7.5.1 Applicable Standard

According to FCC Part 15.247(e) and KDB 558074 DTS 01 Meas. Guidance v03r05

7.5.2 Conformance Limit

The transmitter power spectral density conducted from the transmitter to the antenna shall not be greater than 8 dBm in any 3 kHz band during any time interval of continuous transmission.

7.5.3 Measuring Instruments

The Measuring equipment is listed in the section 6.3 of this test report.

7.5.4 Test Setup

Please refer to Section 6.1 of this test report.

7.5.5 Test Procedure

The testing follows Measurement Procedure 10.3 Method AVGPSD of FCC KDB Publication No. 558074 D01 DTS Meas. Guidance v03r05
This procedure may be used when the maximum (average) conducted output power was used to demonstrate compliance to the output power limit. This is the baseline method for determining the maximum (average) conducted PSD level. If the instrument has an RMS power averaging detector, it must be used; otherwise, use the sample detector. The EUT must be configured to transmit continuously (duty cycle ≥ 98%); otherwise sweep triggering/signal gating must be implemented to ensure that measurements are made only when the EUT is transmitting at its maximum power control level (no transmitter off time is to be considered).
The RF output of EUT was connected to the spectrum analyzer by RF cable and attenuator.
The path loss was compensated to the results for each measurement.
Set to the maximum power setting and enable the EUT transmit continuously.
The EUT was operating in controlled its channel.
a) Set instrument center frequency to DTS channel center frequency.
b) Set span to at least 1.5 times the OBW.
c) Set RBW to: 3 kHz ≤ RBW ≤ 100 kHz. .
d) Set VBW ≥3 x RBW.
e) Detector = power averaging (RMS) or sample detector (when RMS not available).
f) Ensure that the number of measurement points in the sweep ≥ 2 x span/RBW.
g) Sweep time = auto couple.
h) Employ trace averaging (RMS) mode over a minimum of 100 traces.
i) Use the peak marker function to determine the maximum amplitude level.
j) If measured value exceeds limit, reduce RBW (no less than 3 kHz) and repeat (note that this may require zooming in on the emission of interest and reducing

7.5.6 Test Results

EUT:	2 in 1 tablet PC	Model No.:	511
Temperature:	20 ℃	Relative Humidity:	48%
Test Mode:	Mode2/Mode3/Mode4	Test By:	Lake Xie

Test Channel	Frequency (MHz)	Power Density (dBm/3KHz)	Limit (dBm/3KHz)	Verdict
1Mbps				
00	2402	-19.764	8	PASS
19	2440	-18.584	8	PASS
39	2480	-20.063	8	PASS

Power spectral density plot on channel 00	1Mbps

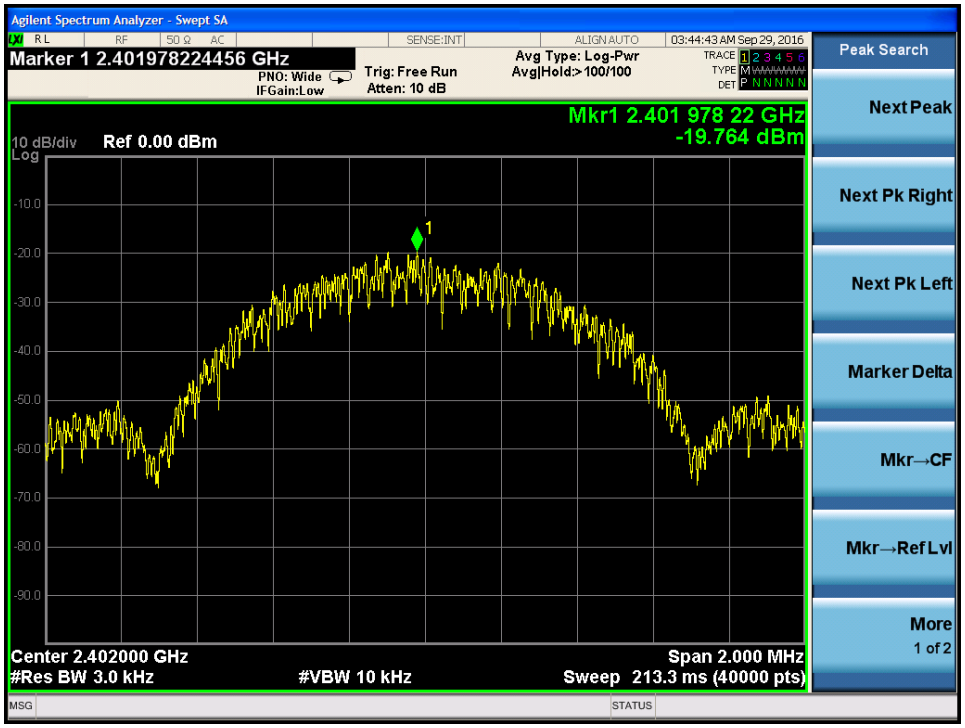

Power spectral density plot on channel 19	1Mbps

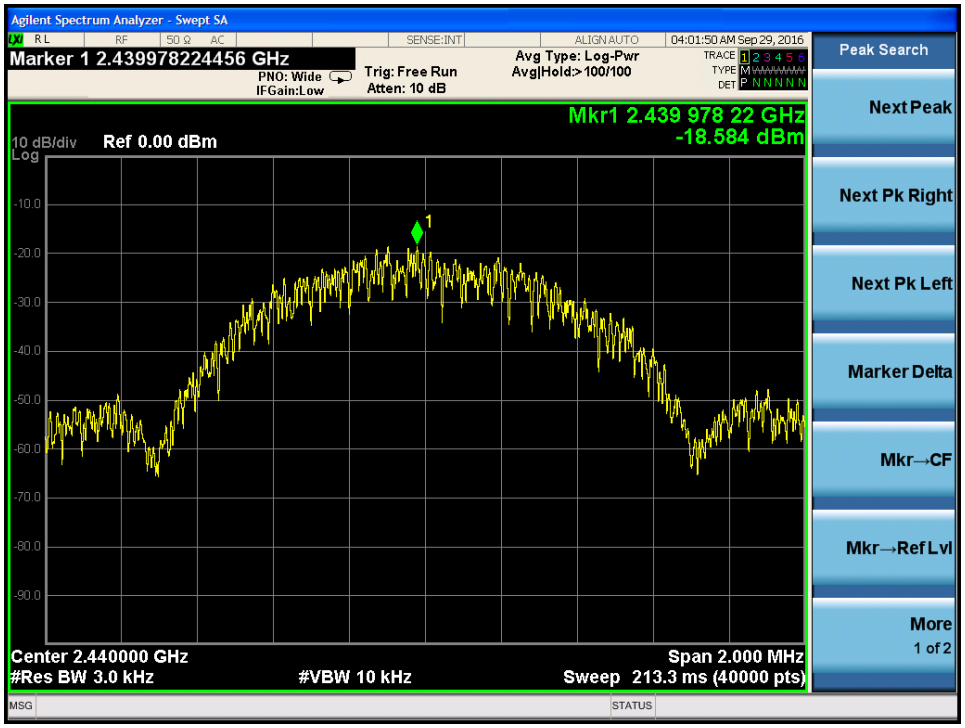

Power spectral density plot on channel 39	1Mbps

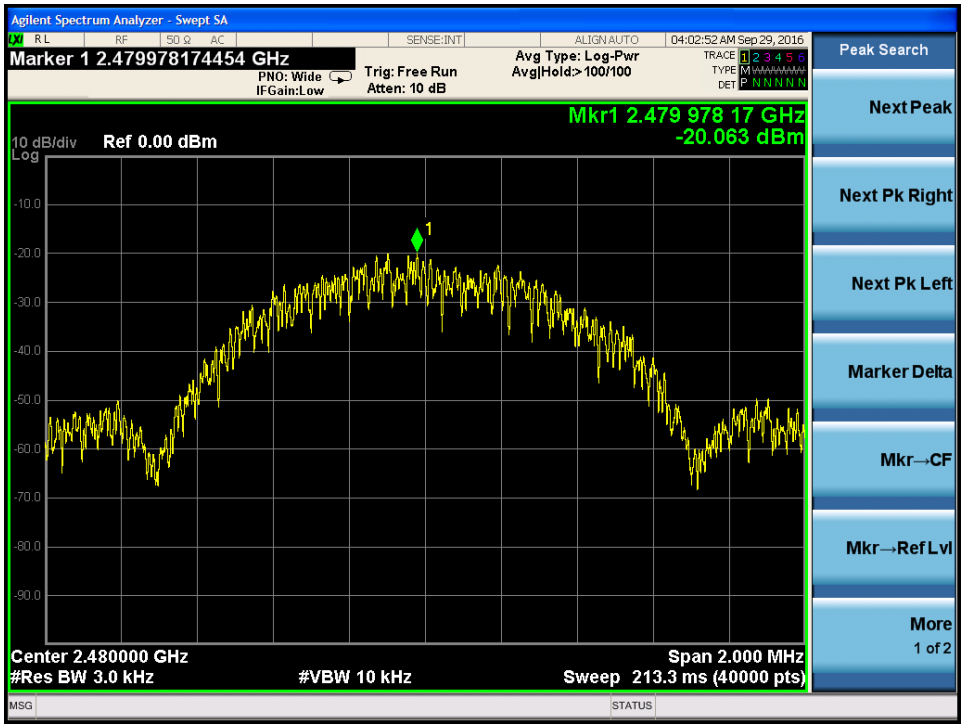

7.6 CONDUCTED BAND EDGE MEASUREMENT

7.6.1 Applicable Standard

According to FCC Part 15.247(d) and KDB 558074 DTS 01 Meas. Guidance v03r05

7.6.2 Conformance Limit

In any 100 kHz bandwidth outside the frequency band in which the spread spectrum or digitally modulated intentional radiator is operating, the radio frequency power that is produced by the intentional radiator shall be at least 20 dB below that in the 100 kHz bandwidth within the band that contains the highest level of the desired power, based on either an RF conducted or a radiated measurement, provided the transmitter demonstrates compliance with the peak conducted power limits. If the transmitter complies with the conducted power limits based on the use of RMS averaging over a time interval, as permitted under paragraph (b)(3) of this section, the attenuation required under this paragraph shall be 30 dB instead of 20 dB.

7.6.3 Measuring Instruments

The Measuring equipment is listed in the section 6.3 of this test report.

7.6.4 Test Setup

Please refer to Section 6.1 of this test report.

7.6.5 Test Procedure

The testing follows FCC KDB Publication No. 558074 D01 DTS Meas. Guidance v03r05.
The RF output of EUT was connected to the spectrum analyzer by RF cable and attenuator.
The path loss was compensated to the results for each measurement.
Set to the maximum power setting and enable the EUT transmit continuously.
The EUT was operating in controlled its channel.
Set RBW to 100 kHz and VBW of spectrum analyzer to 100 kHz with a convenient frequency span including 100 kHz bandwidth from band edge.
Measure the highest amplitude appearing on spectral display and set it as a reference level. Plot the graph with marking the highest point and edge frequency.
Repeat above procedures until all measured frequencies were complete.

7.6.6 Test Results

EUT:	2 in 1 tablet PC	Model No.:	511
Temperature:	20 ℃	Relative Humidity:	48%
Test Mode:	Mode2/Mode4	Test By:	Lake Xie

GFSK mode: Band Edge-Low Channel

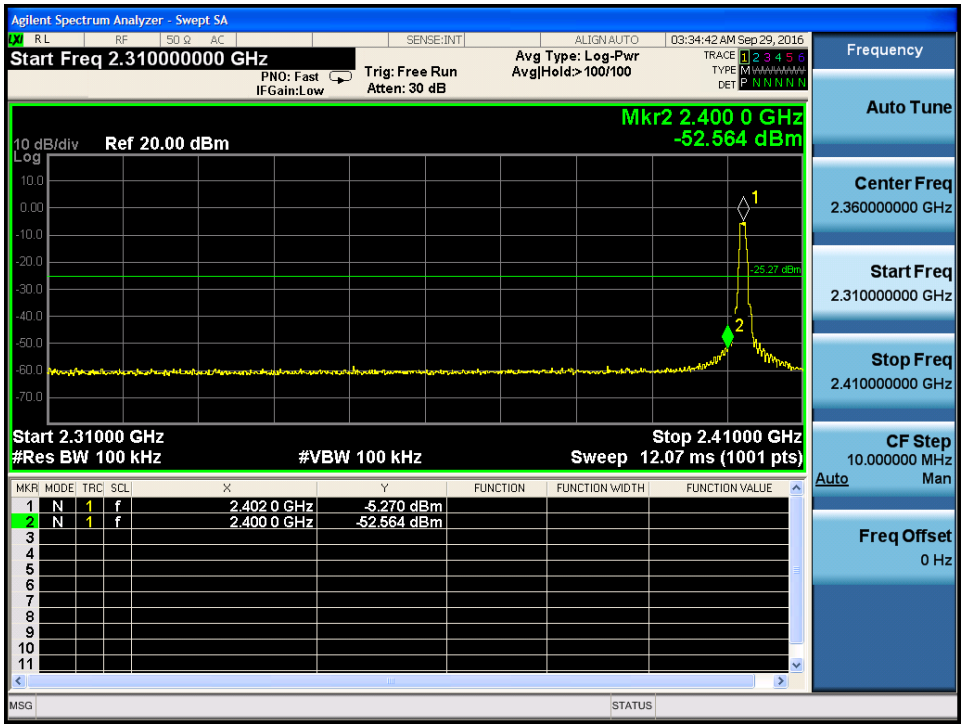

GFSK mode: Band Edge-High Channel

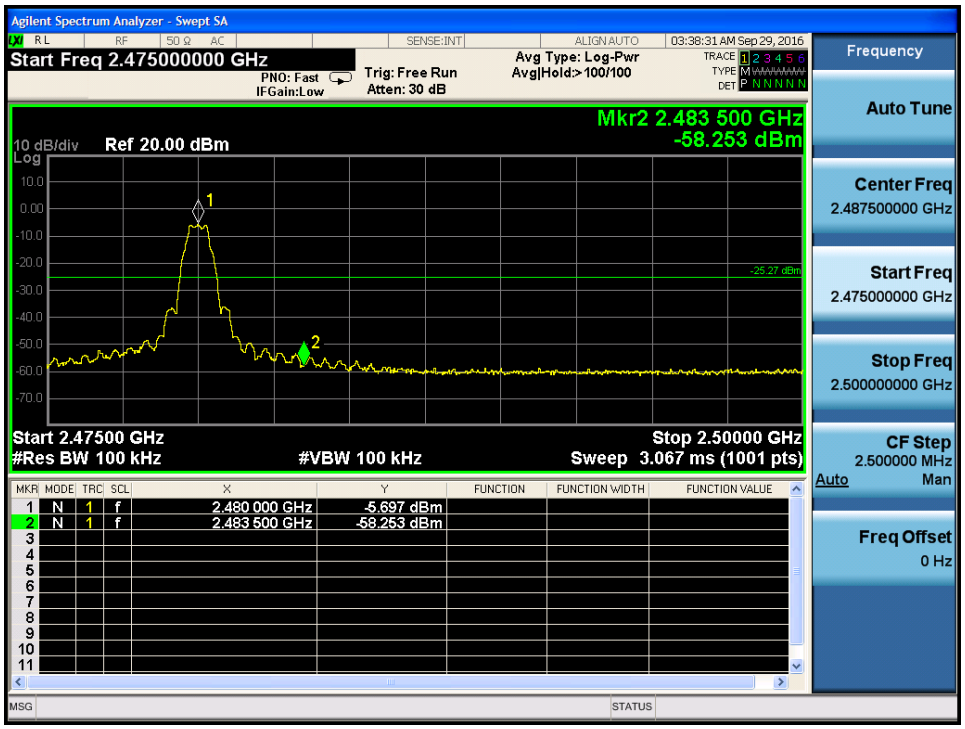

7.7 ANTENNA APPLICATION

7.7.1 Antenna Requirement

15.203 requirement: For intentional device, according to 15.203: an intentional radiator shall be designed to ensure that no antenna other than that furnished by the responsible party shall be used with the device.

7.7.2 Result

The EUT antenna is FPCB antenna. It comply with the standard requirement.

END OF REPORT