NOTES:

1. INSTALL POWER SUPPLY (ITEM 24) INTO HEAT SINK (ITEM 6) USING ITEM 14 5 PL. AND ITEM 36 3 PL. INSTALL ITEM 25 UNDER BRACKET AS SHOWN.
2. INSTALL ITEM 9 INTO ITEM 6, THEN INSTALL ITEM ITEM 11, 2 PL, USING ITEM 13
3. OPEN BOX AND CONNECT A1–P6 AND W1–P6 TO A2J6.
4. INSTALL TX SHIELD, PASSING CABLE LABELED "TX" THROUGH SLOT IN SHIELD. CONNECT A1P2 TO A3J2.
5. INSTALL INSULATOR (ITEM 16) BEFORE INSTALLING RCVR SYNTH MODULE (ITEM 10).
6. ON –0201THRU –0401 ASSYS, ROUTE CABLE (W4) FROM APPROPRIATE OUTPUT OF MAIN RCVR THROUGH HOLE ON GUARD RCVR SIDE OF MOTHER BOARD LABELED "HI IN" AND ATTACH TO INPUT OF GUARD RCVR BEFORE INSTALLING GUARD MODULE IN CHASSIS.
7. INSTALL GUARD RCVR ASSY INTO ADAPTER BRACKET (ITEM 26) (IF APPLICABLE) USING ITEM 23 4 PL. (–0201 THRU –0401 ASSYS)
8. MOUNT GUARD ADAPTER BOARD (ITEM 26) ON BRACKET (ITEM 27) BEFORE INSTALLING IN CHASSIS. (–0201 THRU –0401 ASSYS)

ZONE	REV	DESCRIPTION	DATE	APPROVED	APPROVED
		REVISIONS			
	E	REVISED PER DCN 9020 ADD DETAIL C, ITEMS 38 & 39, AND –0501 VERSION	9/29/94	S ELLIOTT	
	F	REVISED PER DCN 9194 ADD DESENSITIZED VERSIONS	3/29/95	B ALTMEYER	
	G	REVISED PER DCN 9488 ADDS 300–018435 TX HEATSINK ASSY	3/31/95	S ELLIOTT	
	H	REVISED PER DCN 9765 ADD ITEM 41, UPDATE MOD STATUS TABLE	9/15/95	S ELLIOTT	
	J	REVISED PER DCN 9695 MOVE & REVISE MOD STATUS TABLE	10/13/95	B MURRAY	
	11	REVISED PER ECO 116716	8/12/96	V DRAKE	
	12	REVISED PER ECO 122116	12/19/96	V DRAKE	
	M	REVISED PER DCN W375 ADD NOTE 16	11/11/98	S ELLIOTT	
	N	REVISED PER DCN W618 ADD LABELS,REMOVE SHT.3	7/6/99	V. WALLACE	
	P	REVISED PER DCN W823 FIX CONN. LABELING J102 & J103	5/17/00	V. WALLACE	
	R	REVISED PER DCN W1427 CHANGE SCREW LENGTH, ADD LABELS	5/04/01	V. WALLACE	S. ELLIOTT
	T	REVISED PER DCN W1610 ADD P25 VERSIONS	9/21/01	V. WALLACE	S. ELLIOTT
	U	REVISED PER DCN W1688 ADD PATENT LABEL	10/05/01	V. WALLACE	S. ELLIOTT

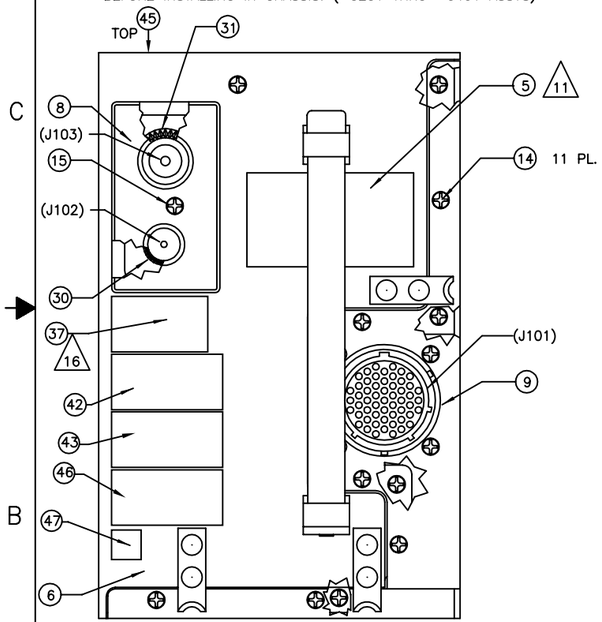

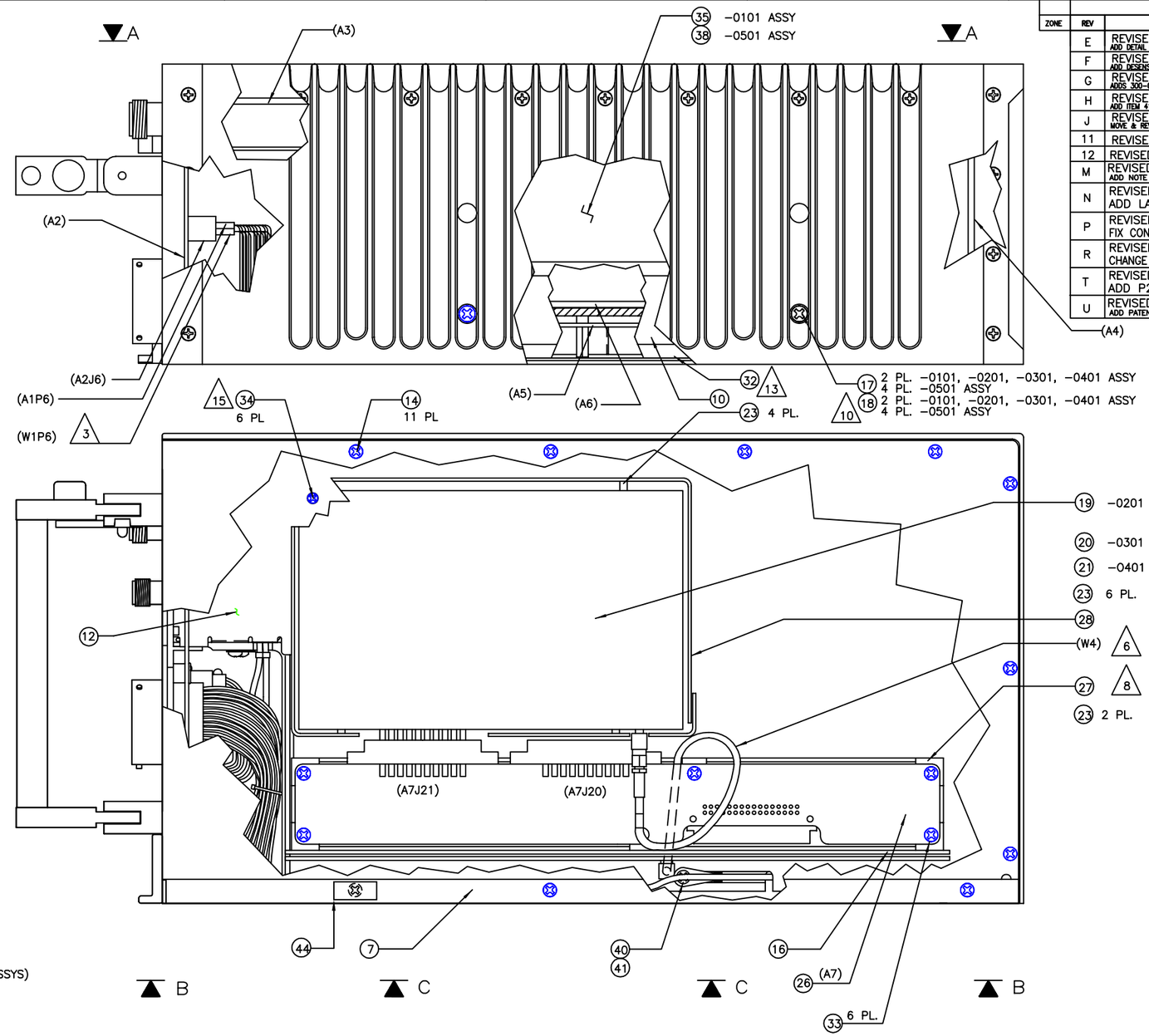

–0201,–0301 SHOWN

SPL 401–015525–XXXX
(SEE SHT 2 FOR DETAILS)

9. MOUNT GUARD RECEIVER AND ADAPTER ASSYS TO INTERNAL SIDE WALL USING ITEM 23 THRU HOLES PROVIDED. (–0201 THRU –0401 ASSYS)
10. INSTALL ITEMS 17 AND 18 THROUGH CHASSIS INTO RCVR/SYNTH MODULE OR MTM (AS REQUIRED) AFTER CLOSING UNIT.
11. AFFIX LABEL APPROX. AS SHOWN.
12. REF. PCS–107.
13. INSTALL ITEM 32 AS SHOWN. ADHERE TO ITEM 9 SIDEWALL.
14. GROUND COAX CABLES USING ITEM 33 2 PL.
15. FASTEN ITEM 12 TO STANDOFFS USING ITEM 34 6 PL.
16. MARK CURRENT MOD LEVEL ON LABEL PER RT–5000 CONFIGURATION INDEX DOCUMENT (149–115525).

(NOTES CONTINUED ON SHEET 3)

THIS DOCUMENT CONTAINS PROPRIETARY INFORMATION OF WULFSBERG ELECTRONICS DIVISION. NEITHER RECEIPT NOR POSSESSION THEREOF CONFERS ANY RIGHT TO REPRODUCE, OR USE, OR DISCLOSE, IN WHOLE OR IN PART, ANY SUCH INFORMATION WITHOUT WRITTEN AUTHORIZATION FROM WULFSBERG ELECTRONICS DIVISION.

NEXT ASSEMBLY	FINAL ASSEMBLY
	400–015525–XXXX
APPLICATION	

QTY REQ'D	PART OR IDENTIFYING NO.	NOMENCLATURE OR DESCRIPTION	MATERIAL SPECIFICATION	ITEM

UNLESS OTHERWISE SPECIFIED DIMENSIONS ARE IN INCHES TOLERANCES ARE:
FRACTIONS ± DECIMALS .XX ± .XXX ± ANGLES ±

MATERIAL

FINISH

DO NOT SCALE DRAWING

APPROVALS		DATE
DRAWN	S WOLFE	03–16–92
ENGINEER	S ELLIOTT	09–18–92
CHECKED	S ELLIOTT	09–18–92
ISSUED	S OWINGS	09–18–92

WULFSBERG ELECTRONICS DIVISION
A Chelton Group Company
Prescott, AZ 86301 U.S.A.

RT–5000
FINAL ASSEMBLY

SIZE	P/N RANGE	DOCUMENT NO.	REV.
D	–0101/–2511	400–015525	U

SCALE 1:1 SHEET 1 OF 4

DWG NO. 400–015525 SH 1

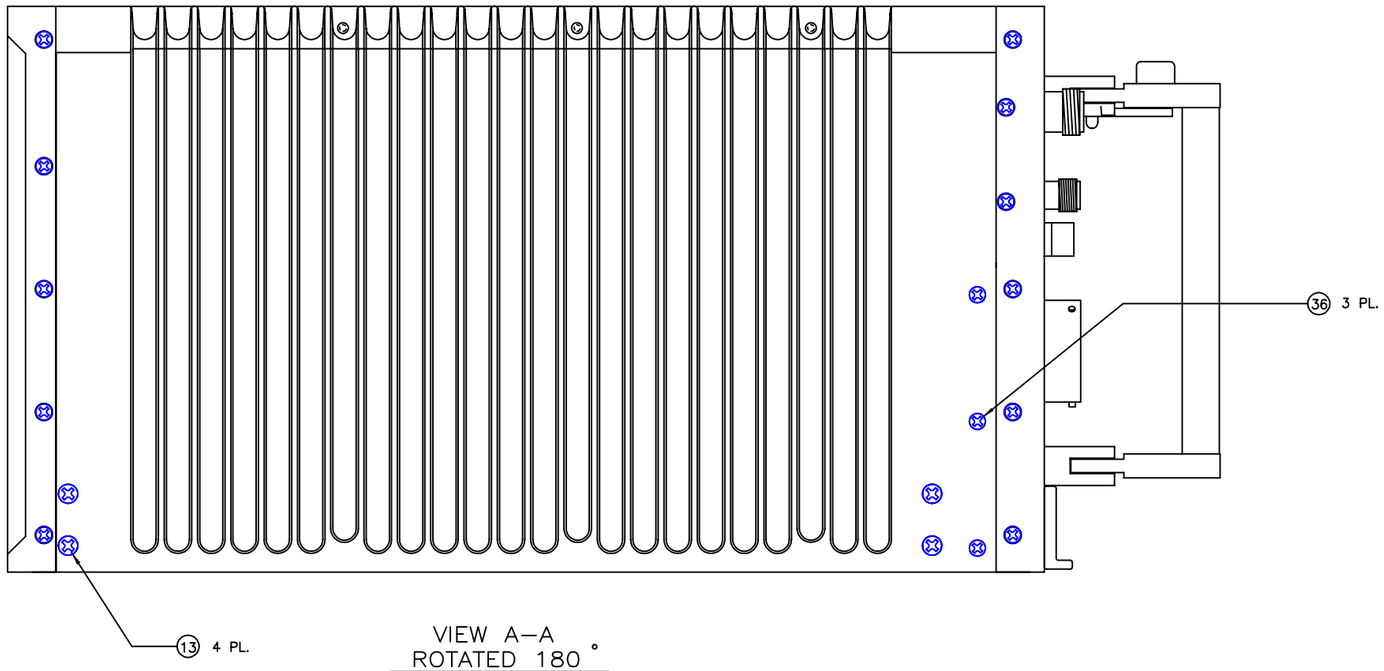

VIEW A–A
ROTATED 180 °

DASH NO.	DESCRIPTION	SHEET
-0101	WITHOUT GUARD RECEIVER	1 AND 2
-0201	WITH 30–50 MHz GUARD	
-0301	WITH 138–174 MHz GUARD	
-0401	WITH 406–512 MHz GUARD	
-0501	WITH SYNTHESIZED GUARD	
-0611	WITH D.E.S. ENCRYPTED VHF138 MHz TANAPA	3 AND 4
-0711	WITH VHF138 MHz TANAPA	
-0811	WITH D.E.S. ENCRYPTED UHF403 MHz TANAPA	
-0911	WITH UHF403 MHz TANAPA	
-1011	WITH D.E.S. ENCRYPTED UHF520 MHz TANAPA	
-1111	WITH UHF520 MHz TANAPA	
-1211	WITH D.E.S. ENCRYPTED UHF800 MHz TANAPA	
-1311	WITH UHF800 MHz TANAPA	
-1411	WITH D.E.S. ENCRYPTED VHF138 MHz TANAPA AND UHF800 MHz TANAPA	
-1511	WITH VHF138 MHz TANAPA AND UHF800 MHz TANAPA	
-1611	WITH D.E.S. ENCRYPTED VHF138 MHz TANAPA AND D.E.S. ENCRYPTED UHF800 MHz TANAPA	
-1711	WITH VHF138 MHz TANAPA AND D.E.S. ENCRYPTED UHF800 MHz TANAPA	
-1811	WITH D.E.S. ENCRYPTED VHF138 MHz TANAPA AND UHF520 MHz TANAPA	
-1911	WITH VHF138 MHz TANAPA AND UHF520 MHz TANAPA	
-2011	WITH D.E.S. ENCRYPTED VHF138 MHz TANAPA AND D.E.S. ENCRYPTED UHF520 MHz TANAPA	
-2111	WITH VHF138 MHz TANAPA AND D.E.S. ENCRYPTED UHF520 MHz TANAPA	
-2211	WITH D.E.S. ENCRYPTED VHF138 MHz TANAPA AND UHF403 MHz TANAPA	
-2311	WITH VHF138 MHz TANAPA AND UHF403 MHz TANAPA	
-2411	WITH D.E.S. ENCRYPTED VHF138 MHz TANAPA AND D.E.S. ENCRYPTED UHF403 MHz TANAPA	
-2511	WITH VHF138 MHz TANAPA AND D.E.S. ENCRYPTED UHF403 MHz TANAPA	

16

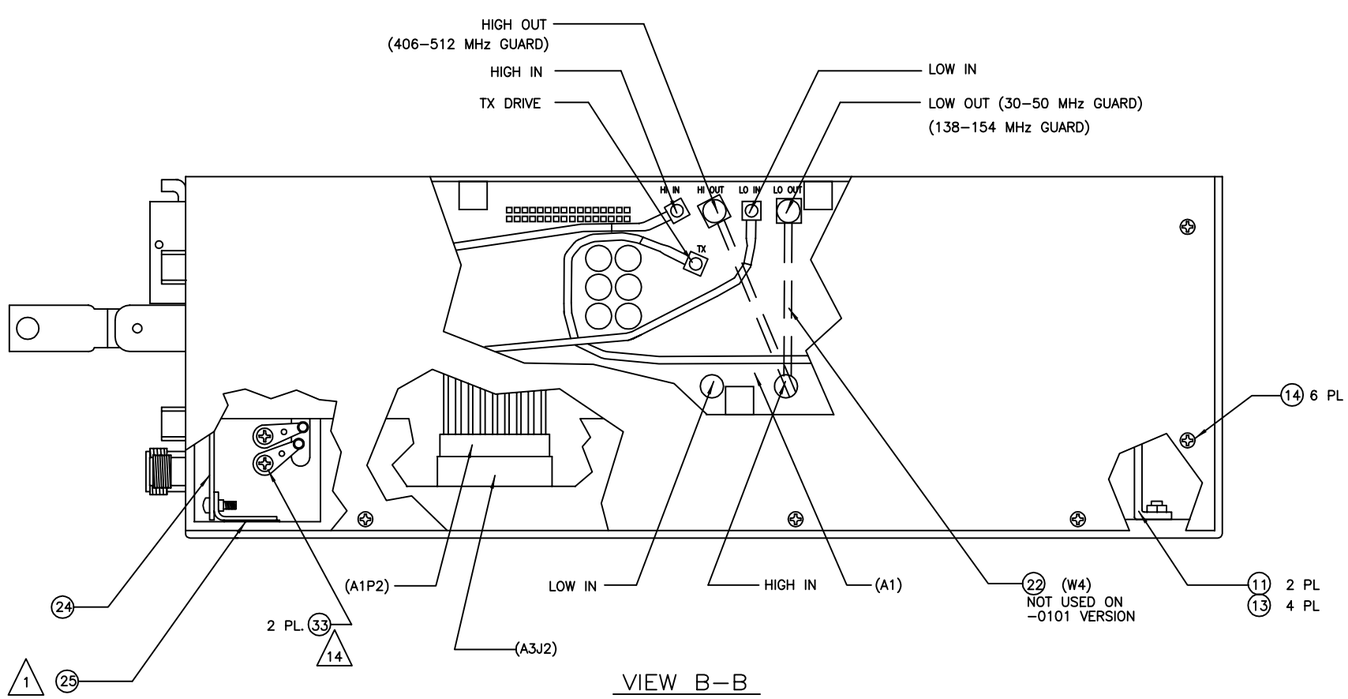

VIEW B–B
(–0101 THRU –0401 SHOWN)

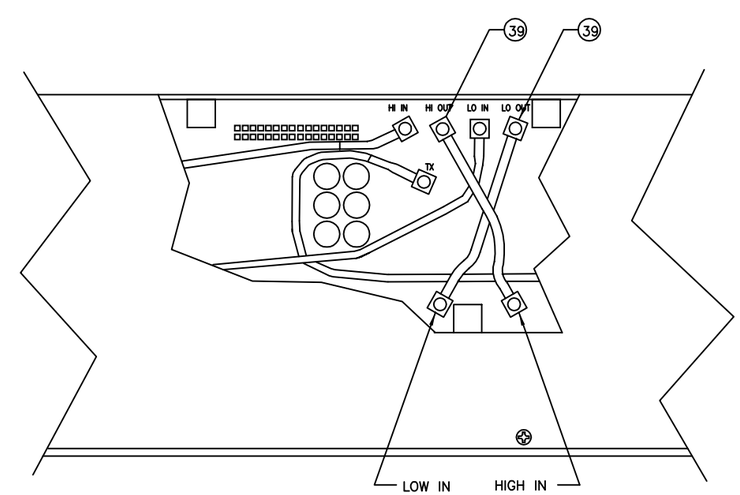

PARTIAL VIEW "C" (–0501 ONLY)

PROPRIETARY NOTICE ON TITLE PAGE APPLIES.

DRAWN S WOLFE
CHECKED

WULFSBERG ELECTRONICS DIVISION
A Chelton Group Company
PRESCOTT, AZ 86301 U.S.A.

SIZE	CAGE CODE	DWG NO.	REV
D	1B7G3	400–015525	U

SCALE 1:1 SHEET 2 OF 4

DWG NO. 400–015525 SH 2

NOTES (continued):

17. ROUTE COAX CABLES FROM P/A (A3) TO APPROPRIATE LOCATION ON MOTHERBOARD AS SHOWN IN DETAIL THAT RELATES TO CONFIGURATION BEING BUILT. INSTALL CABLE (39) BETWEEN MODULES AS SHOWN.

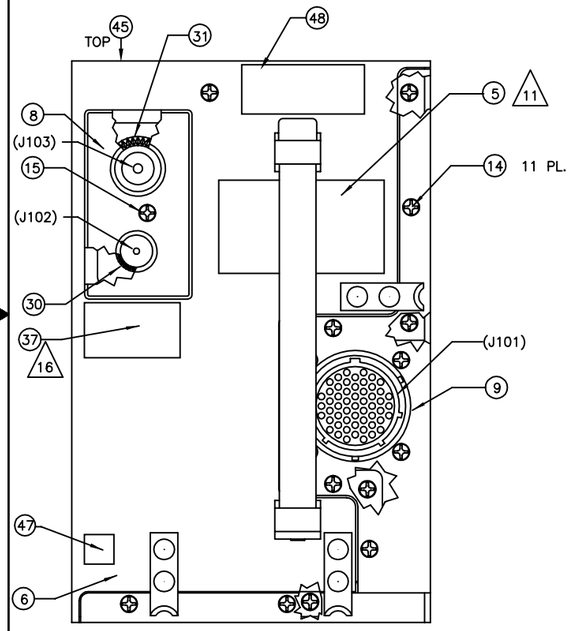

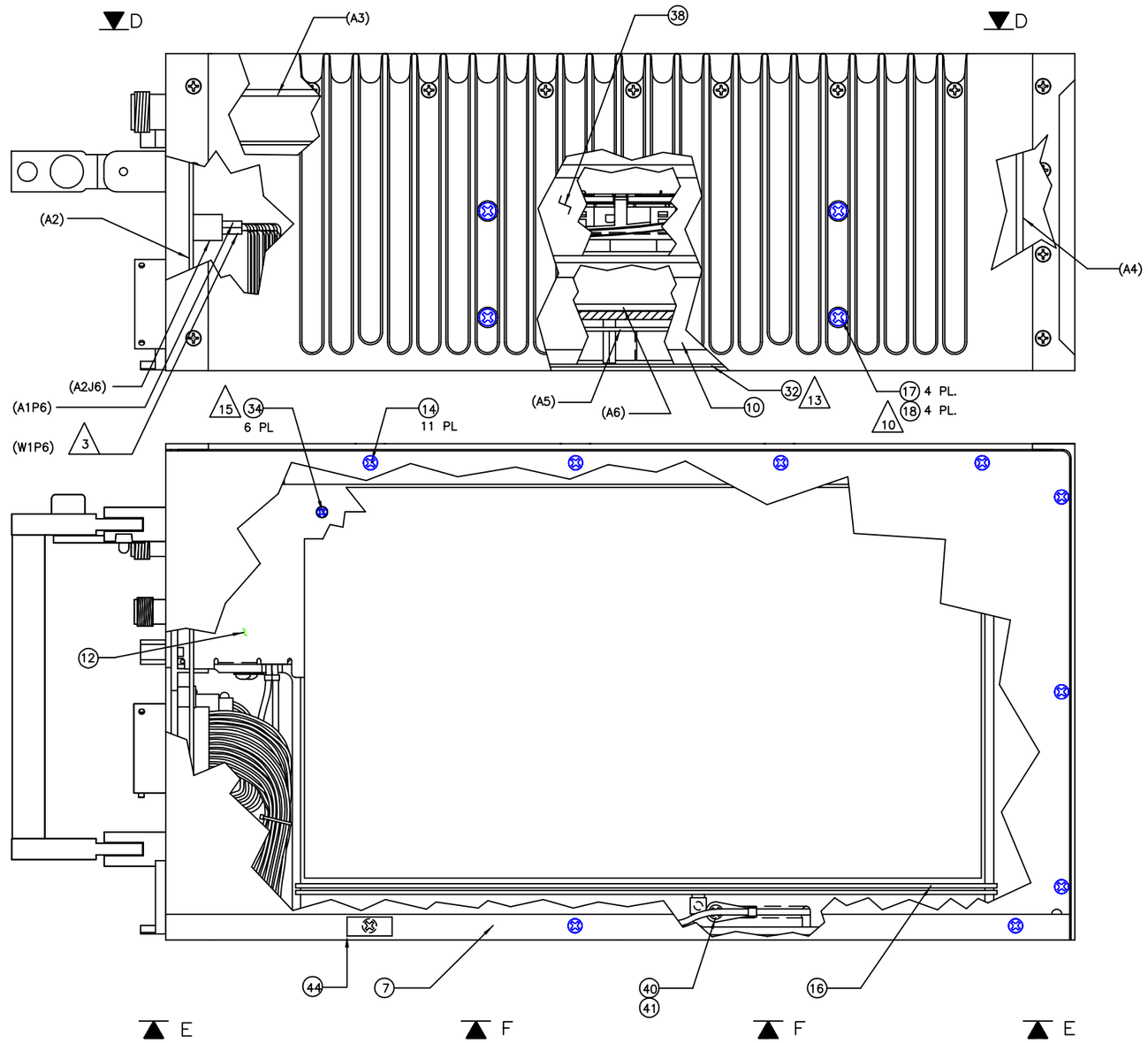

-0611 THRU-2511 SHOWN (WITH MULTIPLE TRANSCEIVER MODULE)

(SHEETS 3 & 4)

DWG NO. 400-015525 SH 3

PROPRIETARY NOTICE ON TITLE PAGE APPLIES.

DRAWN S WOLFE	WULFSBERG ELECTRONICS DIVISION, A Chelton Group Company, Prescott, AZ 86301 U.S.A.		
CHECKED	SIZE D	CAGE CODE 1B7G3	DWG NO. 400-015525	REV U
	SCALE 1:1		SHEET 3 OF 4

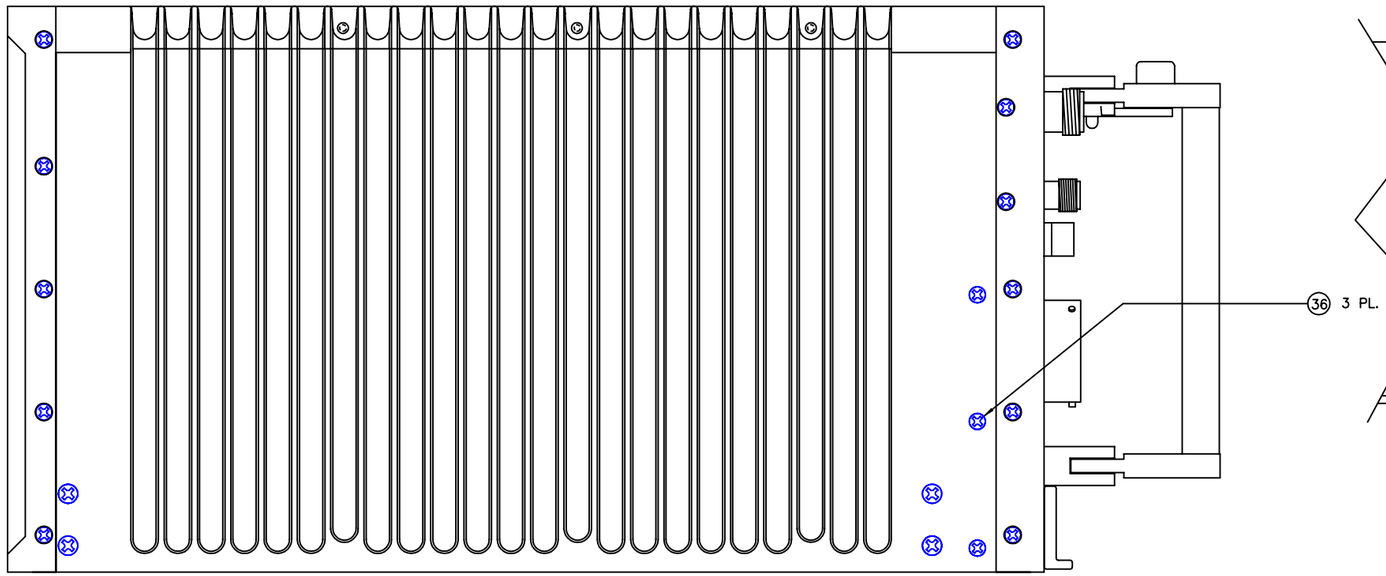

VIEW D–D
ROTATED 180 °

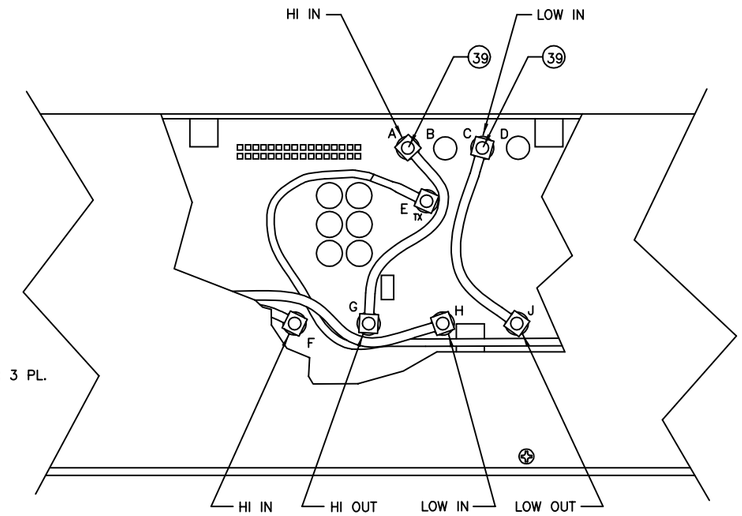

PARTIAL VIEW "F"
–1411 THRU –2511 SHOWN

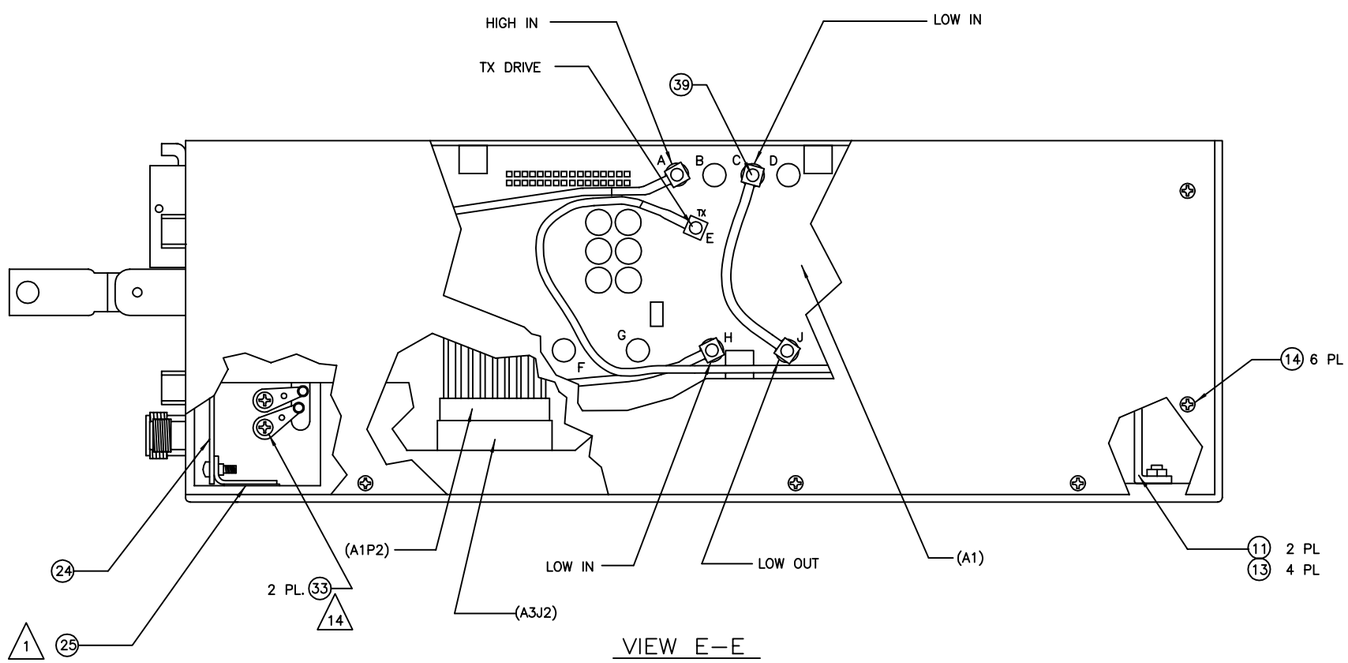

VIEW E–E
–0611 THRU –0711

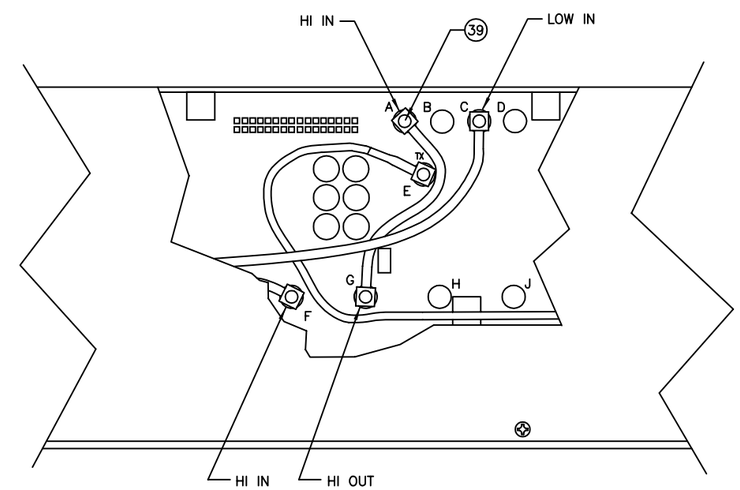

PARTIAL VIEW "F"
–0811 THRU –1311 SHOWN

PROPRIETARY NOTICE ON TITLE PAGE APPLIES.

DRAWN S WOLFE	WULFSBERG ELECTRONICS DIVISION, A Chelton Group Company, PRESCOTT, AZ 86301 U.S.A.		
CHECKED	SIZE D	CAGE CODE 1B7G3	DWG NO. 400–015525	REV U
	SCALE 1:1		SHEET 4 OF 4

DWG NO. 400–015525 SH 4

DOC NO.	REV
310-015947-0201	A

REVISIONS

Rev	DCN	Requested by	Cognizant Engineer Last Rev Signed on Master	Doc. Control Approval Last Rev Signed on Master	Release Date Completed on Master
A	W1665	Wallace, Vern		Wallace, Vern	

Note:
This may be a partial list. Refer to DOCIDX for those DCN's which have changed the associated part data in the WEEDS database but not affected this document.

DRAWING TITLE
PARTS LIST, SYSTEM WRAPAROUND CHASSIS, RT-5000

THIS DOCUMENT CONTAINS PROPRIETARY INFORMATION OF WULFSBERG ELECTRONICS DIVISION, A CHELTON GROUP COMPANY. NEITHER RECEIPT NOR POSSESSION THEREOF CONFERS ANY RIGHT TO REPRODUCE, OR USE, OR DISCLOSE, IN WHOLE OR IN PART, ANY SUCH INFORMATION WITHOUT WRITTEN AUTHORIZATION FROM WULFSBERG ELECTRONICS DIVISION.

Wulfsberg Electronics Division
A Chelton Group Company
Prescott, AZ 86301 U.S.A.

SIZE	CAGE CODE	DWG. NO	REV
A	1B7G3	310-015947-0201	A
			SCALE

PARTS LIST NOTES

Item	Qty	UM	Part #	Title	Reference
0	RF	RF	300-015947	ASSY SYS WRAPAROUND CHASSIS RT-5000	
0	RF	RF	300-016260	ASSY DSP/LOGIC BD RT-5000	
2	1	EA	300-316345-01	COVER ASSEMBLY RT-5000 SIDE	
3	1	EA	300-015495-01	ASSY MOTHER BOARD RT-5000	**NOTE: **REV J OR HIGHER ONLY****
4	1	EA	124-017502-01	CABLE ASSY RT-5000 I/O FILTER	
5	1	EA	300-016260-0201	ASSY DSP/LOGIC BOARD RT-5000	
6	3	EA	MS51957-13	SCREW, 4-40 X 1/4 PHP	
7	4	EA	MS24693-3B	SCREW, 4-40 X 5/16 FHP BLK	
8	6	EA	MS51957-14	SCREW, 4-40 X 5/16 PHP	
11	6	EA	MS35333-70	WASHER, LOCK INT TOOTH #4	
13	1	EA	MS24693-C1	SCREW, 4-40 X 3/16 FHP	

DOC NO.	REV
401-015525-1611	B

REVISIONS

Rev	DCN	Requested by	Cognizant Engineer Last Rev Signed on Master	Doc. Control Approval Last Rev Signed on Master	Release Date Completed on Master
A	W1610	Elliott, Stephen	Elliott, Stephen	Wallace, Vern	
B	W1688	Marshall, Kenneth	Elliott, Stephen	Wallace, Vern	

Note:
This may be a partial list. Refer to DOCIDX for those DCN's which have changed the associated part data in the WEEDS database but not affected this document.

THIS DOCUMENT CONTAINS PROPRIETARY INFORMATION OF WULFSBERG ELECTRONICS DIVISION, A CHELTON GROUP COMPANY. NEITHER RECEIPT NOR POSSESSION THEREOF CONFERS ANY RIGHT TO REPRODUCE, OR USE, OR DISCLOSE, IN WHOLE OR IN PART, ANY SUCH INFORMATION WITHOUT WRITTEN AUTHORIZATION FROM WULFSBERG ELECTRONICS DIVISION.

DRAWING TITLE
PARTS LIST, RT-5000 138 MHZ W/D.E.S. AND 800 MHZ W/D.E.S. MTM GUARD

Wulfsberg Electronics Division
A Chelton Group Company
Prescott, AZ 86301 U.S.A.

SIZE	CAGE CODE	DWG. NO	REV
A	1B7G3	401-015525-1611	B
			SCALE

PARTS LIST NOTES

Item	Qty	UM	Part #	Title	Reference
0	RF	RF	150-215525	WMS PROCEDURE, MASTER ROUTING RT-5000	
0	RF	RF	400-015525	FINAL ASSY RT-5000	
0	RF	RF	651-040937	MASTER DRAWING LIST, RT-5000 (-0611/-2511 VERSIONS ONLY)	
5	1	EA	156-041163-01	LABEL, RT-5000 (NON FAA/FCC)	
6	1	EA	300-018435-01	ASSY RT-5000 TX/HEATSINK	
7	1	EA	146-015946-01	COVER RT-5000 BOTTOM	
8	1	EA	146-015962-01	COVER RT-5000 ANTENNA CONNECTOR	
9	1	EA	300-015947-0201	ASSY RT-5000 SYS WRAPAROUND CHASSIS	
10	1	EA	300-316330-03	ASSY RT-5000 RX/SYNTHESIZER GUARD MODULE	
11	2	EA	300-315949-01	ASSY RT-5000 BRACKET HINGE	
12	1	EA	300-318440-01	ASSY RT-5000 PA SHIELD	
13	4	EA	MS24693-28B	SCREW, 6-32 X 1/2 FHP BLK	
14	28	EA	MS24693-3B	SCREW, 4-40 X 5/16 FHP BLK	
15	1	EA	MS24693-6B	SCREW, 4-40 X 1/2 FHP BLK	
16	1	EA	111-016529-02	INSULATOR MOTHER BOARD	
17	4	EA	MS51957-29B	SCREW, 6-32 X 7/16 PHP BLK	
18	4	EA	MS35338-136B	WASHER, SPLITLOCK #6 BLK	
24	1	EA	300-015550-01	ASSY RT-5000 POWER SUPPLY	**NOTE: **REV J OR HIGHER ONLY****
25	1	EA	146-016712-01	THERMAL PAD	
30	1	EA	111-017561-01	GASKET EMI N RT-5000	
31	1	EA	111-017562-01	GASKET EMI TNC RT-5000	
32	AR	AR	16204-7	FOAM PORON 6 X 9 X .04	
33	2	EA	MS51957-12	SCREW, 4-40 X 3/16 PHP	
34	6	EA	MS24693-C17	SCREW, 2-56 X 5/32 FHP	
36	3	EA	MS24693-4B	SCREW, 4-40 X 3/8 FHP BLK	
37	1	EA	156-014675-01	LABEL MODIFICATION	
38	1	EA	300-040911-1601	ASSY, MTM, RT-5000 W/D.E.S. VHF 138 MHZ & D.E.S. UHF 800 MHZ TANAPA	
39	2	EA	123-117938-02	PARTS LIST, CABLE ASSY 3.25", SYNTHESIZED GUARD RECEIVER, RT-5000 SYNTH	
40	1	EA	MS51957-2	SCREW, 2-56 X 3/16 PHP	
41	1	EA	MS15795-802	WASHER, FLAT #2 X .250 DIA	

Item	Qty	UM	Part #	Title	Reference
44	1	EA	156-040123-01	LABEL, TAMPER PROOF	
45	1	EA	057-03511-0001	DECAL, ESD CAUTION	
47	1	EA	057-03284-0000	TAG, SOFTWARE (SWID 00)	
48	1	EA	156-041164-01	LABEL, MOTOROLA PATENT	

DOC NO.	REV
310-016260-0201	A

REVISIONS

Rev	DCN	Requested by	Cognizant Engineer Last Rev Signed on Master	Doc. Control Approval Last Rev Signed on Master	Release Date Completed on Master
A	W1665	Wallace, Vern		Wallace, Vern	

Note:
This may be a partial list. Refer to DOCIDX for those DCN's which have changed the associated part data in the WEEDS database but not affected this document.

DRAWING TITLE
PARTS LIST, DSP/LOGIC BOARD RT-5000

THIS DOCUMENT CONTAINS PROPRIETARY INFORMATION OF WULFSBERG ELECTRONICS DIVISION, A CHELTON GROUP COMPANY. NEITHER RECEIPT NOR POSSESSION THEREOF CONFERS ANY RIGHT TO REPRODUCE, OR USE, OR DISCLOSE, IN WHOLE OR IN PART, ANY SUCH INFORMATION WITHOUT WRITTEN AUTHORIZATION FROM WULFSBERG ELECTRONICS DIVISION.

Wulfsberg Electronics Division
A Chelton Group Company
Prescott, AZ 86301 U.S.A.

SIZE	CAGE CODE	DWG. NO	REV
A	1B7G3	310-016260-0201	A
			SCALE

PARTS LIST NOTES

Item	Qty	UM	Part #	Title	Reference
0	RF	RF	300-016260	ASSY DSP/LOGIC BD RT-5000	
0	RF	RF	152-016260	SCHEMATIC, DSP/LOGIC (RT-5000)	
1	4	EA	106-014270-01	XSTR MMBT3904 NPN 60V 200MA	**Q1 Q2 Q3 Q4**
2	16	EA	106-414794-01	DIODE, ZENER MMBZ5242BL 12V ZEN SMD	**CR1 CR2 CR3 CR4 CR5 CR6 CR7 CR8 CR10 CR14 CR15 CR16 CR17 CR18 CR19 CR20**
3	1	EA	007-05117-0003	DIODE, MMBZ5229B ZNR 4.3V SOT	**CR9**
4	2	EA	106-515788-01	DIODE, HSMS-2800 SHOTTKY SMD	**CR12 CR13**
5	1	EA	106-841134-01	PARTS LIST, I.C., PROGRAMMED EPROM, DSP-LOGIC, RT-5000	**U13**
6	1	EA	106-714781-02	I.C., 74HC373DW TRI-ST OCT D F/F	**U12**
7	1	EA	106-714782-02	I.C., 74HC377DW OCTL D F-F SMD	**U21**
8	1	EA	106-714784-02	I.C., 74HC540DW INV OCTL BUFF SMD	**U20**
9	1	EA	106-714787-02	I.C., 8K X 8 EE PROM	**U15**
10	1	EA	106-714789-02	I.C., SCC2692 DUAL UART SMM	**U16**
11	1	EA	106-714803-03	I.C., DG201A QUAD ANLG SW SMD	**U1**
12	2	EA	106-714804-03	I.C., TL074CD QUAD OP AMP SMD	**U2 U3**
13	1	EA	123-04040-0003	IC 74HC4040 12 BIT CNTR SO PKG	**U7**
14	1	EA	123-00004-0003	I.C., 74HC04 INV SMD	**U10**
15	1	EA	106-816866-01	I.C., PROGRAMMED GAL	**U17**
16	1	EA	106-715963-03	I.C. 32KX 8 CMOS SRAM SMD	**U14**
17	4	EA	106-715965-02	I.C., LTC485IS8 DIFF BUS XCVR SMD	**U18 U19 U22 U23**
18	1	EA	120-03026-0080	IC 78M05 DPAK VOLT REG. SMD	**VR1**
19	1	EA	106-716572-02	I.C., TN87C51FA 8BIT UCONTROL SMD	**U11**
20	2	EA	106-717470-03	I.C., TL072BCD DUAL JFET SMD	**U30 U31**
21	5	EA	112-014328-01	BEAD, FERRITE, SMALL SMD	**FB1 FB3 FB4 FB5 FB7**
22	1	EA	118-114276-2R2	INDUCTOR, 2.2UH 10% 1812	**L1**
23	4	EA	139-215790-01	FILTER EMI T-TYPE 2200PF RADIAL	**F1 F2 F3 F4**
24	1	EA	15413-3	SOCKET CARRIER 28 PIN 828AG11D	**U13**
25	5	EA	15500-103	RESISTOR SIP 10K OHM 1/8W 5%	**RP1 RP2 RP3 RP4 RP5**
26	1	EA	196-015997-107	CAPACITOR, ALUM 100UF 16V BIPOLAR	**C60**
27	2	EA	196-015997-476	CAPACITOR, ALUM 47UF 16V BIPOLAR	**C70 C79**
28	12	EA	106-04101-0016	CAPACITOR, 100PF 50V CHIP 1206	**C6 C73 C76 C77 C82 C85 C86 C87 C97 C98 C105 C106**

Item	Qty	UM	Part #	Title	Reference
29	13	EA	106-04102-0016	CAPACITOR, 1000PF 5% 50V NPO 1206	**C7 C8 C13 C30 C31 C32 C33 C88 C92 C93 C95 C96 C104**
30	1	EA	106-04100-0016	CAPACITOR, 10PF 5% 50V NPO 1206	**C91**
31	4	EA	106-04221-0016	CAPACITOR, 220PF 5% 50V NPO 1206	**C72 C75 C81 C84**
32	0	EA	DELETED	DELETED	
33	1	EA	106-04471-0016	CAPACITOR, 470PF 5% 50V NPO 1206	**C29**
34	6	EA	106-04472-0047	CAPACITOR, 4700PF 10% 50V X7R 1206	**C26 C28 C71 C74 C80 C83**
35	44	EA	106-04104-0047	CAPACITOR, 0.1UF 50V CHIP 1206	**C14 C15 C16 C17 C18 C19 C20 C21 C22 C23 C24 C25 C34 C35 C36 C37 C38 C39 C40 C41 C42 C43 C44 C45 C46 C47 C48 C50 C52 C55 C61 C63 C64 C65 C66 C67 C68 C69 C89 C94 C107 C108 C109 C110**
36	8	EA	106-04224-0047	CAPACITOR, .22UF 10% 50V X7R 1206	**C1 C2 C5 C27 C78 C90 C99 C100**
37	5	EA	096-01186-0080	CAPACITOR, 1.0UF 35V 20% CHIP TANT	**C3 C4 C49 C51 C53**
39	8	EA	210-014808-685	CAPACITOR, CHIP 6.8UF 35V TANT 20%	**C9 C10 C12 C54 C58 C59 C62 C103**
40	1	EA	139-00000-0004	RESISTOR ZERO OHM JUMPER 1206	**R51**
41	10	EA	139-01000-0000	RESISTOR 100 OHM 1% 100PPM 1/8W 1206	**R2 R3 R16 R19 R41 R42 R43 R54 R61 R62**
42	7	EA	139-01001-0000	RESISTOR 1000 OHM 1% 100PPM 1/8W 1206	**R20 R44 R53 R55 R59 R69 R70**
43	12	EA	139-01002-0000	RESISTOR 10K OHM 1% 100PPM 1/8W 1206	**R17 R29 R30 R37 R38 R45 R46 R47 R57 R58 R65 R68**
44	2	EA	139-01004-0000	RESISTOR 1M OHM 1% 100PPM 1/8W 1206	**R74 R75**
45	3	EA	139-01403-0000	RESISTOR 140K OHM 1% 100PPM 1/8W 1206	**R21 R31 R39**
46	5	EA	139-02210-0000	RESISTOR 221 OHM 1% 100PPM 1/8W 1206	**R4 R7 R14 R63 R66**
47	2	EA	139-02211-0000	RESISTOR 2.21K OHM 1% 100PPM 1/8W 1206	**R18 R22**
48	6	EA	139-00221-0000	RESISTOR 22.0 OHM 1% 100PPM 1/8W 1206	**R10 R11 R12 R13 R40 R67**
49	0	EA	DELETED_1	DELETED_1	
50	4	EA	139-02212-0000	RESISTOR 22.1K OHM 1% 100PPM 1/8W 1206	**R26 R27 R34 R35**
51	2	EA	139-03011-0000	RESISTOR 3.01K OHM 1% 100PPM 1/8W 1206	**R25 R33**
52	8	EA	139-04750-0000	RESISTOR 475 OHM 1% 100PPM 1/8W 1206	**R5 R6 R8 R9 R23 R24 R32 R60**
53	2	EA	139-04751-0000	RESISTOR 4.75K OHM 1% 100PPM 1/8W 1206	**R48 R72**
54	4	EA	139-04752-0000	RESISTOR 47.5K OHM 1% 100PPM 1/8W 1206	**R15 R52 R56 R64**
55	1	EA	139-05622-0000	RESISTOR 56.2K OHM 1% 100PPM 1/8W 1206	**R73**
56	1	EA	106-716864-02	I.C., PROCESSOR DSP56001	**U5**
57	1	EA	106-716862-03	I.C., A/D CONVERTER CS5336	**U4**
58	1	EA	129-216843-01	CONNECTOR 37 PIN FILTERED	**P3**
59	1	EA	123-04046-0003	IC 74HC4046A	**U9**

Item	Qty	UM	Part #	Title	Reference
60	1	EA	106-716867-02	I.C., 74HC4059	**U8**
61	1	EA	106-716451-01	I.C., MC79M05CDT -5 VOLT REG SMD	**VR2**
62	1	EA	007-04056-0000	DIODE, MMBV109 L	**CR25**
63	4	EA	007-05117-0000	DIODE, MMBZ5226B ZNR 3.3V SOT	**CR21 CR22 CR23 CR24**
64	3	EA	106-716954-03	I.C., MS6264A 8K X 8 SRAM	**U27 U28 U29**
65	1	EA	106-740014-02	I.C., PCM1710 16/20 BIT DUAL DAC	**U6**
66	2	EA	MS51957-13	SCREW, 4-40 X 1/4 PHP	
67	2	EA	MS35333-70	WASHER, LOCK INT TOOTH #4	
68	1	EA	090-00457-0006	STANDOFF FLARE MOUNT, 4-40, .187 LG	
69	1	EA	108-616260-01	PWB RT-5000 DSP/LOGIC	
70	AR	AR	16005-1	WHITE SILICONE GLUE & SEAL (RTV-162)	
71	3	EA	15413-12	SOCKET CARRIER	**U24 U25 U26**
72	2	EA	139-06812-0000	RESISTOR 68.1K OHM 1% 100PPM 1/8W 1206	**R28 R36**
73	1	EA	106-740015-02	I.C., DS1232LP 5V MICRO-MONITOR	**U33**
74	AR	AR	16012-3	LOCTITE ACCELERATOR & BONDER	
75	AR	AR	16031-1	WIRE, 28AWG WIRE WRAP	
76	1	EA	195-018352-335	CAPACITOR, CHIP 3.3UF TANT SMD	**C56**
77	1	EA	106-716822-02	I.C., 74HC74A DUAL D FLIP-FLOP SMD	**U32**
78	1	EA	139-02432-0000	RESISTOR 24.3K OHM 1% 100PPM 1/8W 1206	**R49**

DOC NO.	REV
310-015495-01	L

REVISIONS

Rev	DCN	Requested by	Cognizant Engineer Last Rev Signed on Master	Doc. Control Approval Last Rev Signed on Master	Release Date Completed on Master
J	W228	T. TAMMEN	T. TAMMEN	Steve Elliott	7/6/98
K	W401	Patricia P. Hogan	Steve Elliott	Ron Montgomery	11/16/98
L	W1278	Jim Davis		Vern Wallace	

Note:
This may be a partial list. Refer to DOCIDX for those DCN's which have changed the associated part data in the WEEDS database but not affected this document.

DRAWING TITLE

PARTS LIST, RT-5000 MOTHER BOARD

THIS DOCUMENT CONTAINS PROPRIETARY INFORMATION OF WULFSBERG ELECTRONICS DIVISION, A CHELTON GROUP COMPANY. NEITHER RECEIPT NOR POSSESSION THEREOF CONFERS ANY RIGHT TO REPRODUCE, OR USE, OR DISCLOSE, IN WHOLE OR IN PART, ANY SUCH INFORMATION WITHOUT WRITTEN AUTHORIZATION FROM WULFSBERG ELECTRONICS DIVISION.

Wulfsberg Electronics Division
A Chelton Group Company
Prescott, AZ 86301 U.S.A.

SIZE	CAGE CODE	DWG. NO	REV
A	1B7G3	310-015495-01	L
			SCALE

PARTS LIST NOTES

Item	Qty	UM	Part #	Title	Reference
0	RF	RF	152-015495	SCHEMATIC RT-5000 MOTHERBOARD	
0	RF	RF	300-015495	ASSY DWG RT-5000 MOTHERBOARD	
1	1	EA	007-00179-0000	XSTR 2N3904 NPN	Q1
2	2	EA	106-014270-01	XSTR MMBT3904 NPN SMD	Q3 Q4
3	1	EA	007-00065-0000	XSTR 2N3906 PNP 40V 200MA	Q2
4	2	EA	007-05117-0006	DIODE, MMBT5232B ZNR 5.6V SOT	CR101 CR100
5	10	EA	106-514278-01	DIODE, BAV99 DUAL SERIES SW	CR61 CR65 CR64 CR63 CR62 CR6 CR59 CR123 CR60 CR400
6	4	EA	106-514806-01	DIODE, MMBD914 SWITCH SMD	CR666 CR10 CR12 CR5
8	5	EA	106-714803-02	IC DG201A QUAD SPST ANLOG SW	U18 U17 U16 U14 U15
9	4	EA	106-714804-02	IC TL074I QUAD JFET-INP OPAMP	U19 U20 U21 U23
10	2	EA	106-714813-04	IC ULN2003L OPEN COLLECTOR DRIVER	U13 U12
11	4	EA	106-715964-02	IC PCF8574ATD 8 BIT SMD	U10 U11 U8 U9
12	2	EA	106-715966-04	IC LM337LZ 3 TERM REG TO-92	U28 U400
13	1	EA	120-03026-0080	IC 78M05 DPAK VOLT REG. SMD	U1
14	2	EA	106-716271-02	IC PCF8574TD 8 BIT SMD	U7 U6
15	2	EA	007-08092-0000	DIODE, MMAD1108 QUAD SO	CR22 CR21
16	1	EA	108-615495-01	PWB RT-5000 MOTHERBOARD	
17	2	EA	123-2001-000	CKT JUMPER 1/4W SIZE	R10 R1001
18	2	EA	129-216501-06	CONNECTOR SOLDER CUP SINGLE ROW	
19	AR	AR	16022-3	SLEEVING SHRINK .093	
20	AR	AR	16091-0	WIRE, 24 AWG 19STR BLK	
21	AR	AR	16091-2	WIRE, 24 AWG 19STR RED	
22	AR	AR	16091-7	WIRE, 24 AWG 19STR VIO	
23	AR	AR	16091-1	WIRE, 24 AWG 19STR BRN	
24	AR	AR	16091-5	WIRE, 24 AWG 19STR GRN	
25	AR	AR	16091-3	WIRE, 24 AWG 19STR ORN	
26	AR	AR	16091-4	WIRE, 24 AWG 19STR YEL	
27	3	EA	120-03126-0004	IC LM317LZ ADJ VOLT REG 100MA	U5 U4 U401
28	1	EA	12920-1	DIODE, 1N4001	CR8
29	5	EA	118-114276-221	INDUCTOR, 220uH 10% CHIP	L7 L6 L5 L4 L101
30	1	EA	019-02723-0009	INDUCTOR 56nH 20% 340MA 1210	L3
31	1	EA	124-016514-01	CABLE ASSY RT-5000/OTAR 2	A1P2
32	1	EA	129-214824-50	CONNECTOR 50 POS HEADER	A1J1

Item	Qty	UM	Part #	Title	Reference
33	1	EA	129-216000-01	CONNECTOR 37 PIN D-SUB RT ANGLE	A1J3
34	2	EA	129-216512-01	CONNECTOR 32S DIN	A1J4 A1J5
35	0	EA	DELETED	DELETED	
36	8	EA	196-015997-107	CAPACITOR ALUM 100uF 16V BIPOLAR	C98 C93 C144 C105 C100 C148 C82 C72
37	4	EA	196-016261-227	CAPACITOR ALUM 220uF 35V	C1 C13 C14 C999
38	3	EA	106-04100-0016	CAPACITOR 10pF 5% 50V NPO 1206	C86 C84 C88
39	29	EA	106-04101-0016	CAPACITOR 100pf 50V CHIP 1206	C90 C404 C101 C102 C103 C106 C109 C110 C111 C150 C16 C17 C400 C401 C94 C403 C405 C406 C505 C68 C73 C83 C85 C87 C89 C91 C95 C96 C402
40	6	EA	106-04102-0016	CAPACITOR 1000pF 5% 50V NPO 1206	C25 C4 C5 C15 C20 C21
41	7	EA	106-04152-0016	CAPACITOR 1500pF 5% 50V NPO 1206	C408 C9 C8 C74 C19 C18 C75
42	8	EA	106-04221-0016	CAPACITOR 220pF 5% 50V NPO 1206	C70 C7 C69 C6 C12 C11 C108 C107
43	34	EA	106-04471-0016	CAPACITOR 470pF 5% 50V NPO 1206	C26 C31 C38 C37 C36 C35 C34 C30 C32 C41 C300 C29 C80 C211 C209 C10 C33 C753 C761 C760 C759 C758 C757 C756 C39 C754 C40 C752 C751 C750 C43 C42 C79 C755
44	21	EA	106-04103-0047	CAPACITOR .01uF 50V CHIP 1206	C132 C207 C203 C142 C141 C139 C138 C135 C407 C133 C288 C131 C128 C127 C126 C125 C124 C121 C120 C134 C206
45	17	EA	106-04224-0047	CAPACITOR .22uF 10% 50V X7R 1206	C146 C28 C256 C255 C24 C2345 C23 C204 C3 C2 C145 C136 C129 C122 C119 C1026 C201
46	3	EA	210-014808-685	CAPACITOR CHIP 6.8uF 35V TANT 20%	C77 C205 C140
47	4	EA	210-015976-226	CAPACITOR CHIP 22uF 20V TANT	C202 C137 C130 C123
48	4	EA	15500-473	RESISTOR-NETWORK 47K OHMS	RP1 RP3 RP4 RP6
49	2	EA	15500-472	RESISTOR SIP 4.7K	RP7 RP8
50	2	EA	230-040009-151	RESISTOR 150 OHM 5% 1/2W CC	R1 R11
51	20	EA	233-015974-502	RESISTOR ADJ 5K OHM POT	R122 R90 R96 R63 R69 R1003 R440 R1004 R7 R107 R410 R29 R27 R26 R16 R128 R126 R124 R102 R123
52	1	EA	139-00000-0004	RESISTOR ZERO OHM JUMPER 1206	R888
53	9	EA	139-01000-0000	RESISTOR 100 OHM 1% 100PPM 1/8W 1206	R47 R330 R35 R430 R46 R530 R531 R999 R431
54	4	EA	139-01001-0000	RESISTOR 1000 OHM 1% 100PPM 1/8W 1206	R134 R18 R402 R403

Item	Qty	UM	Part #	Title	Reference
55	31	EA	139-01002-0000	RESISTOR 10K OHM 1% 100PPM 1/8W 1206	R104 R65 R131 R1011 R1012 R1013 R25 R24 R21 R77 R132 R31 R130 R115 R114 R113 R112 R109 R20 R44 R98 R32 R33 R400 R401 R404 R92 R3 R71 R5 R45
56	5	EA	139-00100-0000	RESISTOR 10 OHM 1% 100PPM 1/8W 1206	R23 R22 R136 R133 R135
57	11	EA	139-02002-0000	RESISTOR 20.0K OHM 1% 100PPM 1/8W 1206	R1014 R117 R82 R83 R84 R85 R86 R87 R88 R89 R81
58	2	EA	139-02551-0000	RESISTOR 2.55K OHM 1% 100PPM 1/8W 1206	R39 R34
59	13	EA	139-03162-0000	RESISTOR 31.6K OHM 1% 100PPM 1/8W 1206	R94 R66 R68 R72 R78 R93 R99 R111 R100 R105 R79 R110 R106
60	2	EA	139-03321-0000	RESISTOR 3.32K OHM 1% 100PPM 1/8W 1206	R49 R42
62	8	EA	139-04752-0000	RESISTOR 47.5K OHM 1% 100PPM 1/8W 1206	R48 R43 R6 R801 R1015 R73 R800 R4
63	2	EA	015-00207-0026	RESISTOR 3.3K OHM 2% OCTAL SO	RP5 RP2
64	2	EA	234-016658-01	THERMISTOR PTC RXE075 0.75A	R41 R1038
65	1	EA	129-216668-12	CONNECTOR 12 POS RECEPTACLE	A1P6
66	AR	AR	16005-1	WHITE SILICONE GLUE & SEAL (RTV-162)	
67	2	EA	MS51957-13	SCREW, 4-40 X 1/4 PHP	
68	2	EA	MS35338-135	WASHER, SPLITLOCK #4	
69	2	EA	089-02744-0024	NUT, FLAT 4-40	
70	AR	AR	600-016240-02	TAPE ELECTRICAL KAPTON .500W	
71	1	EA	129-116837-01	PLUG KEYING	
72	11	EA	129-116651-01	CONTACT HIGH PRESSURE	
73	AR	AR	16247-1	CABLE TIE PANDUIT PLT.7M-C	
74	1	EA	233-015974-503	RESISTOR ADJ 50K OHM POT	R500
75	5	EA	112-014328-01	BEAD, FERRITE, SMALL SMD	B1 B2 B3 B4 B5

DOC NO.	REV
310-040896-0101	A

REVISIONS

Rev	DCN	Requested by	Cognizant Engineer Last Rev Signed on Master	Doc. Control Approval Last Rev Signed on Master	Release Date Completed on Master
A	W1694	Marshall, Kenneth	Wild, Stanley	Wallace, Vern	

Note:
This may be a partial list. Refer to DOCIDX for those DCN's which have changed the associated part data in the WEEDS database but not affected this document.

DRAWING TITLE
PARTS LIST, CONTROLLER BOARD, MTM, RT-5000

THIS DOCUMENT CONTAINS PROPRIETARY INFORMATION OF WULFSBERG ELECTRONICS DIVISION, A CHELTON GROUP COMPANY. NEITHER RECEIPT NOR POSSESSION THEREOF CONFERS ANY RIGHT TO REPRODUCE, OR USE, OR DISCLOSE, IN WHOLE OR IN PART, ANY SUCH INFORMATION WITHOUT WRITTEN AUTHORIZATION FROM WULFSBERG ELECTRONICS DIVISION.

Wulfsberg Electronics Division
A Chelton Group Company
Prescott, AZ 86301 U.S.A.

SIZE	CAGE CODE	DWG. NO	REV
A	1B7G3	310-040896-0101	A
			SCALE

PARTS LIST NOTES

Item	Qty	UM	Part #	Title	Reference
0	RF	RF	152-040896	SCHEMATIC, CONTROLLER BOARD, MTM, RT-5000	
0	RF	RF	300-040896	ASSEMBLY, CONTROLLER BOARD, MTM, RT-5000	
1	1	EA	108-640896-01	PWB, CONTROLLER BOARD, MTM, RT-5000	
2	1	EA	007-00549-0000	TRANSISTOR MMBT4401L SMT	**Q101**
3	1	EA	019-02534-0002	INDUCTOR 56UH (AXIAL)	**L308**
4	10	EA	096-01186-0080	CAPACITOR, 1.0UF 35V 20% CHIP TANT	**C201 C202 C203 C204 C205 C206 C207 C208 C209 C210**
5	6	EA	106-04101-0016	CAPACITOR, 100PF 50V CHIP 1206	**C317 C318 C319 C320 C321 C322**
6	6	EA	106-04103-0047	CAPACITOR, .01UF 50V CHIP 1206	**C324 C325 C326 C327 C328 C329**
7	6	EA	106-04104-0047	CAPACITOR, 0.1UF 50V CHIP 1206	**C309 C335 C336 C347 C349 C351**
8	1	EA	106-04100-0016	CAPACITOR, 10PF 5% 50V NPO 1206	**C102**
9	4	EA	106-416632-01	DIODE MMBZ5232B 5.6V ZNR	**CR201 CR202 CR203 CR204**
10	2	EA	106-714781-02	I.C., 74HC373DW TRI-ST OCT D F/F	**U102 U103**
11	2	EA	106-714803-02	I.C., DG201A QUAD ANLOG SW (SMD)	**U301 U302**
12	1	EA	106-714804-02	I.C., TL074I QUAD JFET-INP OPAMP	**U303**
13	1	EA	106-716327-01	I.C., 79M12 -12V REG	**U306**
14	1	EA	106-716452-01	I.C., 78M12 12V REG	**U305**
15	2	EA	106-716483-02	I.C., RS-232 LN DRIVER/RECEIVER (SMD)	**U201 U202**
16	1	EA	106-840460-01	PARTS LIST, I.C., PROGRAMMED, XC95108 CPLD, MTM CONTROLLER, RT-5000	**U108**
17	1	EA	106-740507-02	I.C., DS1706L MICRO MONITOR (SMD)	**U107**
18	1	EA	106-740914-02	I.C., PCF8584 IIC BUS CONTROLLER (SOP20)	**U109**
19	1	EA	106-840915-01	PARTS LIST, I.C., PROGRAMMED, XA-G49 PROCESSOR, MTM CONTROLLER, RT-5000	**U101**
20	1	EA	106-740927-02	I.C., QUAD UART ST16C554 (QFP)	**U401**
21	1	EA	106-841000-01	PARTS LIST, I.C., PROGRAMMED, 22V10 PLD, MTM CONTROLLER, RT-5000	**U402**
22	10	EA	112-040469-220	FERRITE BEAD (0603SMD)	**B201 B202 B203 B204 B205 B206 B207 B208 B305 B306**
23	1	EA	118-114276-220	INDUCTOR, 22UH 10% 1812	**L101**
24	2	EA	118-140473-333	INDUCTOR, POWER SMD	**L307 L309**

Item	Qty	UM	Part #	Title	Reference
25	2	EA	118-140986-056	INDUCTOR, 56UH SERIES 4590	**L305 L306**
26	2	EA	120-02432-0000	I.C., 628128 RAM 128KX8 CMOS	**U104 U105**
27	1	EA	120-03115-0007	I.C., LM317MDT ADJ VOLTAGE REG	**U304**
28	1	EA	123-00004-0003	I.C., 74HC04 INV SMD	**U110**
29	2	EA	129-2060-012	CONNECTOR HEADER TWO ROW 12PIN (STRAIGHT)	**J301 J302**
30	1	EA	129-216459-01	CONN EURO 32 PIN	**A8P4**
31	2	EA	129-240900-40	CONN 40 POS DBL ROW SOCKET .8MM SMT	**A8J25 A8J29**
32	2	EA	129-240901-03	HEADER, FRICTION LATCH SINGLE ROW, R/A	**A8J23 A8J24**
33	1	EA	129-240904-10	HEADER, FRICTION LATCH 2- ROW	**A8J22**
34	1	EA	139-040052-01	CRYSTAL 11.0592 MHZ (SMD)	**Y101**
35	10	EA	139-215493-06	FILTER PCB EMI FEEDTHRU SMD	**C211 C212 C213 C214 C215 C216 C217 C218 C219 C220**
36	16	EA	195-018352-107	CAPACITOR, 100UF 20V CHIP TANT	**C307 C310 C313 C314 C315 C316 C323 C330 C333 C334 C337 C338 C339 C342 C343 C352**
37	2	EA	195-040472-226	CAPACITOR, 22UF 35V 20% CHIP TANT LOW ESR	**C340 C341**
38	2	EA	210-040018-270	CAPACITOR, 27PF 5% 50V COG 0603	**C103 C104**
39	7	EA	210-040018-471	CAPACITOR, 470PF 5% 50V COG 0603	**C331 C332 C344 C345 C346 C348 C350**
40	24	EA	210-040021-104	CAPACITOR, .1UF 10% 50V X7R 0805	**C101 C105 C106 C107 C108 C109 C110 C112 C113 C114 C115 C116 C117 C118 C119 C120 C121 C122 C308 C401 C402 C403 C404 C405**
41	4	EA	233-040075-502	TRIMPOT 5 TURN 5K SMD	**R302 R304 R311 R312**
42	1	EA	234-040024-0000	RESISTOR 0000 OHM 1% 100PPM 1/16W TKF 0603	**R104**
43	5	EA	234-040024-1000	RESISTOR 100 OHM 1% 100PPM 1/16W TKF 0603	**R103 R201 R204 R206 R208**
44	9	EA	234-040024-1002	RESISTOR 10K OHM 1% 100PPM 1/16W TKF 0603	**R106 R110 R111 R112 R307 R308 R309 R313 R315**
45	7	EA	234-040024-1003	RESISTOR 100K OHM 1% 100PPM 1/16W TKF 0603	**R102 R316 R317 R318 R319 R202 R205**
46	1	EA	234-040024-1913	RESISTOR 191K OHM 1% 100PPM 1/16W TKF 0603	**R105**
47	1	EA	234-040024-2001	RESISTOR 2.00K OHM 1% 100PPM 1/16W TKF 0603	**R209**
48	4	EA	234-040024-2002	RESISTOR 20.0K OHM 1% 100PPM 1/16W TKF 0603	**R301 R303 R310 R314**
49	1	EA	234-040024-3010	RESISTOR 301 OHM 1% 100PPM 1/16W TKF 0603	**R305**
50	1	EA	234-040024-33R2	RESISTOR 33.2 OHM 1% 100PPM 1/16W TKF 0603	**R109**
51	3	EA	234-040024-4751	RESISTOR 4.75K OHM 1% 100PPM 1/16W TKF 0603	**R203 R207 R101**
52	1	EA	234-040024-9090	RESISTOR 909 OHM 1% 100PPM 1/16W TKF 0603	**R306**

Item	Qty	UM	Part #	Title	Reference
53	8	EA	234-040107-14	VARISTOR 14V 430PF VOLT SUP 0805	**RV301 RV302 RV303 RV304 RV305 RV306 RV307 RV308**
54	AR	AR	16189-3	ADHESIVE SEALANT RTV 739	

DOC NO.	REV
310-040911-1601	B

REVISIONS

Rev	DCN	Requested by	Cognizant Engineer Last Rev Signed on Master	Doc. Control Approval Last Rev Signed on Master	Release Date Completed on Master
A	W1623	Elliott, Stephen		Wallace, Vern	9/26/01
B	W1703	Marshall, Kenneth		Wallace, Vern	

Note:
This may be a partial list. Refer to DOCIDX for those DCN's which have changed the associated part data in the WEEDS database but not affected this document.

THIS DOCUMENT CONTAINS PROPRIETARY INFORMATION OF WULFSBERG ELECTRONICS DIVISION, A CHELTON GROUP COMPANY. NEITHER RECEIPT NOR POSSESSION THEREOF CONFERS ANY RIGHT TO REPRODUCE, OR USE, OR DISCLOSE, IN WHOLE OR IN PART, ANY SUCH INFORMATION WITHOUT WRITTEN AUTHORIZATION FROM WULFSBERG ELECTRONICS DIVISION.

DRAWING TITLE
PARTS LIST, MTM, RT-5000 W/D.E.S. VHF 138 MHZ & D.E.S. UHF 800 MHZ TANAPAS

Wulfsberg Electronics Division
A Chelton Group Company
Prescott, AZ 86301 U.S.A.

SIZE	CAGE CODE	DWG. NO	REV
A	1B7G3	310-040911-1601	B
			SCALE

PARTS LIST NOTES

Item	Qty	UM	Part #	Title	Reference
0	RF	RF	300-040911	ASSEMBLY, MULTIPLE TRANSCEIVER MODULE (MTM), RT-5000	
1	1	EA	300-340910-01	CHASSIS, MULTIPLE TRANSCEIVER MODULE	
2	1	EA	300-340912-01	COVER ASSEMBLY, MTM, RT-5000	
3	1	EA	300-040896-0101	ASSEMBLY, CONTROLLER BOARD, MTM, RT-5000	**A8**
4	1	EA	300-040957-01	ASSEMBLY, UHF BOARD, MTM, RT-5000	**A10**
5	1	EA	300-040898-01	ASSEMBLY, VHF BOARD, MTM, RT-5000	**A9**
6	1	EA	300-041073-08	UHF-800 MHZ ENCRYPTED, MOTOROLA TANAPA MODULE WITH MODIFIED CASTING, MTM, RT-5000	**A12**
7	1	EA	300-041073-02	VHF-138 MHZ ENCRYPTED, MOTOROLA TANAPA MODULE WITH MODIFIED CASTING, MTM, RT-5000	**A11**
8	2	EA	300-040895-01	ASSEMBLY, FLEX-CIRCUIT, MTM, RT-5000	**W5 W7**
9	2	EA	123-140906-01	CABLE ASSEMBLY, MINIATURE COAX	**W6 W8**
10	1	EA	106-040940-01	TRANSISTOR MRF166C N-CHNL PWR MOSFET	
11	1	EA	146-018757-02	RF SEAL RT-5000	
12	6	EA	191-040968-05	STANDOFF, HEX 4-40 X 3/16" MALE-FEMALE, 7/16" LONG	
14	12	EA	MS24693-C17	SCREW, 2-56 X 5/32 FHP	
15	11	EA	MS51957-13	SCREW, 4-40 X 1/4 PHP	
16	4	EA	MS24693-C3	SCREW, 4-40 X 5/16 FHP	
17	1	EA	MS51957-15	SCREW, 4-40 X 3/8 PHP	
18	17	EA	MS35333-70	WASHER, LOCK INT TOOTH #4	
19	2	EA	MS35338-135	WASHER, SPLITLOCK #4	
20	AR	AR	16037-1	THERMAL COMPOUND 120-2	
21	AR	AR	16012-7	LOCTITE 222 PURPLE	
22	4	EA	146-041113-01	GASKET, THERMAL	
24	1	EA	156-041105-01	LABEL, MULTIPLE TRANSCEIVER MODULE (MTM), RT-5000	
25	2	EA	129-040959-01	CONNECTOR, COAX PLUG ADAPTER	
26	1	EA	146-041137-01	HEATSINK, VHF BOARD (RT-5000 MTM)	
27	1	EA	146-041140-01	PAD, THERMAL	
28	1	EA	MS51957-18	SCREW, 4-40 X 5/8 PHP	
29	1	EA	146-041022-01	LID, SHIELD FENCE (1.065 X 1.140)	

DOC NO.	REV
310-015550-01	K

REVISIONS

Rev	DCN	Requested by	Cognizant Engineer Last Rev Signed on Master	Doc. Control Approval Last Rev Signed on Master	Release Date Completed on Master
J	W308	Gannon, Ken	Tammen, Thomas	Elliott, Stephen	12/10/98
K	W1626	Fowler, David		Wallace, Vern	

Note:
This may be a partial list. Refer to DOCIDX for those DCN's which have changed the associated part data in the WEEDS database but not affected this document.

DRAWING TITLE
PARTS LIST, RT-5000 POWER SUPPLY

THIS DOCUMENT CONTAINS PROPRIETARY INFORMATION OF WULFSBERG ELECTRONICS DIVISION, A CHELTON GROUP COMPANY. NEITHER RECEIPT NOR POSSESSION THEREOF CONFERS ANY RIGHT TO REPRODUCE, OR USE, OR DISCLOSE, IN WHOLE OR IN PART, ANY SUCH INFORMATION WITHOUT WRITTEN AUTHORIZATION FROM WULFSBERG ELECTRONICS DIVISION.

Wulfsberg Electronics Division
A Chelton Group Company
Prescott, AZ 86301 U.S.A.

SIZE	CAGE CODE	DWG. NO	REV
A	1B7G3	310-015550-01	K
			SCALE

PARTS LIST NOTES

Item	Qty	UM	Part #	Title	Reference
0	RF	RF	300-015550	ASSY DWG RT-5000 POWER SUPPLY	
0	RF	RF	152-015550	SCHEMATIC RT-5000 POWER SUPPLY	
1	13	EA	106-014270-01	XSTR MMBT3904 NPN 60V 200MA	**Q102**
2	2	EA	007-00065-0001	XSTR MMBT3906 PNP 40V 100MA	**Q103 Q108**
3	2	EA	007-00886-0000	XSTR MOSFET IRF540	**Q100 Q101**
4	2	EA	007-05117-0010	DIODE, Z 8.2V SOT	**CR102 CR104**
5	2	EA	118-1029-000	TOROID HASH FILTER	**L101 L102**
6	1	EA	118-116294-01	INDUCTOR, FIXED RT-5000 PS	**L103**
7	1	EA	118-316293-01	XFMR RT-5000 PWR SPLY	**T100**
8	1	EA	096-01186-0085	CAPACITOR, 6.8UF 35V 20% CHIP TANT	**C132**
9	1	EA	097-00140-0000	CAPACITOR, AL 330UF 100V	**C103**
10	1	EA	106-040479-01	TRANSISTOR, NPN, HV, SMD	**Q104**
11	1	EA	129-216498-24	CONNECTOR 24 POS DBL ROW SHROUDED	**A2J6**
12	3	EA	106-040481-01	TRANSISTOR, POWER IRF9540	**Q105 Q106 Q107**
13	2	EA	106-04151-0016	CAPACITOR, 150PF 5% 50V NPO 1206	**C150 C160**
14	1	EA	106-04182-0016	CAPACITOR, 1800PF 5% 50V NPO 1206	**C139**
15	11	EA	106-04471-0016	CAPACITOR, 470PF 5% 50V NPO 1206	**C133 C134 C135 C136 C137 C140 C141 C144 C145 C151 C152**
16	2	EA	106-440482-070	DIODE, ZENER TRANSORB, ISMB70AT3 SMD	**CR101 CR105**
17	AR	AR	16005-1	WHITE SILICONE GLUE & SEAL (RTV-162)	
18	1	EA	16049-120	FUSE PICO 12AMP 32V 255012	**F1**
19	5	EA	090-00457-0006	STANDOFF FLARE MOUNT, 4-40, .187 LG	**PEM5 PEM4 PEM3 PEM2 PEM1**
20	1	EA	106-440482-085	DIODE, ZENER TRANSORB, ISMB85AT3 SMD	**CR113**
21	1	EA	106-440483-010	DIODE, ZENER, 10V MMBZ5240BLT1	**CR115**
22	1	EA	106-440483-036	DIODE, ZENER, 36V MMBZ5258BL	**CR114**
23	2	EA	106-514278-01	DIODE, BAV99 DUAL SERIES SW	**CR100 CR103**
24	6	EA	106-514986-01	DIODE, MURD620CT DUAL 200V SMD	**CR108 CR109 CR111 CR112 CR116 CR118**
25	2	EA	097-00095-0023	CAPACITOR, EL 3300UF 50V	**C105 C106**
26	1	EA	106-516396-01	DIODE, BAV70L DUAL SW SMD	**CR117**
27	1	EA	106-516766-200	DIODE, MBR20200CT DUAL SCHOTTKY	**CR110**
28	2	EA	106-540471-01	DIODE, MBRS1100 SHTKY 1A 100V SMD	**CR106 CR107**

Item	Qty	UM	Part #	Title	Reference
29	4	EA	106-04103-0047	CAPACITOR, .01UF 50V CHIP 1206	**C101 C102 C143 C153**
30	1	EA	106-740480-01	I.C., SWITCH MODE CONT UC2825ADW	**U105**
31	1	EA	120-03126-0005	IC LM317LM ADJ VOLT REG 100MA	**U113**
32	5	EA	130-09006-3101	RESISTOR CH 1.0 OHM 5% 1W	**R130 R131 R132 R133 R134**
34	2	EA	139-01001-0000	RESISTOR 1000 OHM 1% 100PPM 1/8W 1206	**R138 R148**
35	1	EA	139-01002-0000	RESISTOR 10K OHM 1% 100PPM 1/8W 1206	**R137**
36	1	EA	139-01003-0000	RESISTOR 100K OHM 1% 100PPM 1/8W 1206	**R127**
37	1	EA	139-01503-0000	RESISTOR 150K OHM CHIP 1% EW	**R128**
38	4	EA	139-02552-0000	RESISTOR 25.5K OHM 1% 100PPM 1/8W 1206	**R129 R135 R139 R140**
39	1	EA	139-03011-0000	RESISTOR 3.01K OHM 1% 100PPM 1/8W 1206	**R141**
40	1	EA	139-03321-0000	RESISTOR 3.32K OHM 1% 100PPM 1/8W 1206	**R126**
41	1	EA	139-03480-0000	RESISTOR 348 OHM CHIP 1% 100PPM 1/8W 1206	**R142**
42	1	EA	139-04021-0000	RESISTOR 4.02K OHM 1% 100PPM 1/8W 1206	**R125**
43	1	EA	139-05111-0000	RESISTOR 5.11K OHM 1% 100PPM 1/8W 1206	**R136**
44	1	EA	139-04750-0000	RESISTOR 475 OHM 1% 100PPM 1/8W 1206	**R147**
45	1	EA	234-040024-1002	RESISTOR 10K OHM 1% 100PPM 1/16W TKF 0603	**R117**
46	10	EA	195-040472-226	CAPACITOR, 22UF 35V 20% CHIP TANT LOW ESR	**C146 C147 C148 C149 C154 C155 C156 C157 C158 C159**
47	7	EA	198-040477-105	CAPACITOR, CHIP, MLC, 50 VDC 1UF SMD	**C107 C109 C110 C111 C112 C113 C114**
48	1	EA	210-014281-820	CAPACITOR, 82PF 50V CHIP 1206	**C138**
49	1	EA	210-04332-0047	CAPACITOR 3300pF 50V CHIP 1206	**C100**
50	10	EA	234-014279-101	RESISTOR CHIP 100 OHM 1W 5%	**R106 R107 R108 R109 R110 R111 R112 R113 R114 R119**
51	4	EA	234-014791-12R4	RESISTOR CHIP 12.4 OHM 1% 1/8W	**R101 R102 R103 R104**
52	1	EA	300-316350	BRACKET ASSY, PWR SUP RT-5000 P.S.	
53	2	EA	MS51957-15	SCREW, 4-40 X 3/8 PHP	
54	6	EA	091-00419-0000	WASHER, INSULATING SHOULDER #4	
55	6	EA	MS35338-135	WASHER, SPLITLOCK #4	
56	6	EA	089-02744-0024	NUT, FLAT 4-40	
57	6	EA	MS24693-C4	SCREW, 4-40 X 3/8 FHP	
58	6	EA	146-016712-01	THERMAL PAD	
59	2	EA	180-0010-000	TORROID RETAINER	
60	2	EA	190-0021-000	RUBBER WASHER, 0.750 DIA	
61	2	EA	MS51957-18	SCREW, 4-40 X 5/8 PHP	
62	1	EA	234-040024-5621	RESISTOR 5.62K OHM 1% 100PPM 1/16W TKF 0603	**R115**
63	1	EA	234-040024-8251	RESISTOR 8.25K OHM 1% 100PPM 1/16W TKF 0603	**R116**

Item	Qty	UM	Part #	Title	Reference
64	2	EA	139-00750-0000	RESISTOR 75.0 OHM 1% 100PPM 1/8W 1206	**R100 R105**
65	6	EA	NAS620-C4	WASHER, FLAT #4	
66	1	EA	234-040024-5111	RESISTOR 5.11K OHM 1% 100PPM 1/16W TKF 0603	**R118**
67	1	EA	108-615550-01	PWB RT-5000 POWER SUPPLY	

DOC NO.	REV
310-016330-03	A

REVISIONS

Rev	DCN	Requested by	Cognizant Engineer Last Rev Signed on Master	Doc. Control Approval Last Rev Signed on Master	Release Date Completed on Master
A	W1664	Hovelsrud, Scott		Wallace, Vern	

Note:
This may be a partial list. Refer to DOCIDX for those DCN's which have changed the associated part data in the WEEDS database but not affected this document.

THIS DOCUMENT CONTAINS PROPRIETARY INFORMATION OF WULFSBERG ELECTRONICS DIVISION, A CHELTON GROUP COMPANY. NEITHER RECEIPT NOR POSSESSION THEREOF CONFERS ANY RIGHT TO REPRODUCE, OR USE, OR DISCLOSE, IN WHOLE OR IN PART, ANY SUCH INFORMATION WITHOUT WRITTEN AUTHORIZATION FROM WULFSBERG ELECTRONICS DIVISION.

DRAWING TITLE
PARTS LIST, RT-5000 HIGH SENSITIVITY SYNTHESIZER, GUARD MODULE

Wulfsberg Electronics Division
A Chelton Group Company
Prescott, AZ 86301 U.S.A.

SIZE	CAGE CODE	DWG. NO	REV
A	1B7G3	310-016330-03	A
			SCALE

PARTS LIST NOTES

Item	Qty	UM	Part #	Title	Reference
1	1	EA	300-316330-03	ASSY RT-5000 RX/SYNTHESIZER GUARD MODULE	
2	1	EA	300-316348-01	HOUSING RT-5000 SYNTH-RCVR	
3	1	EA	300-015471-01	ASSY RT-5000 SYNTHESIZER BRD	
4	1	EA	300-015443-03	ASSY RT-5000 HIGH SENSITIVITY RECEIVER BRD	
5	13	EA	191-217432-02	STANDOFF MALE-FEMLE HEX1	
6	22	EA	191-217432-01	STANDOFF MALE-FEMALE 3/16	
7	1	EA	111-016528-01	INSULATOR SYNTHESIZER	
8	1	EA	146-017505-01	SHIELD PAD PORON RT-5000	
9	2	EA	089-05980-0010	SCREW, PNP BRASS 2-56 X 5/16	
10	2	EA	MS35338-134	WASHER, SPLITLOCK #2	
11	2	EA	089-02744-0022	NUT, FLAT 2-56	
12	2	EA	NAS620-C2	WASHER, FLAT #2	
13	1	EA	146-016349-01	COVER RT-5000 SYNTH-RCVR	
14	1	EA	146-016349-02	COVER RT-5000 SYNTHESIZER	
15	36	EA	MS24693-C17	SCREW, 2-56 X 5/32 FHP	
16	1	EA	146-017932-01	SHIELD PAD RECEIVER RT-5000	
19	2	EA	146-018759-01	SEAL FEEDTHRU	
20	1	EA	146-018757-01	RF SEAL RT-5000 RECEIVER	
21	1	EA	146-018758-01	PAD CONDUCTIVE	
22	2	EA	187-01867-0001	GASKET RT-5000	
23	2	EA	187-01867-0002	GASKET RT-5000	
24	1	EA	188-0208-008	SCREW, 4-40 X 1/4 SEMS	
25	AR	AR	016-01134-0002	COPPER TAPE .50 IN	

DOC NO.	REV
310-015443-03	A

REVISIONS

Rev	DCN	Requested by	Cognizant Engineer Last Rev Signed on Master	Doc. Control Approval Last Rev Signed on Master	Release Date Completed on Master
A	W1664	Hovelsrud, Scott		Wallace, Vern	

Note:
This may be a partial list. Refer to DOCIDX for those DCN's which have changed the associated part data in the WEEDS database but not affected this document.

THIS DOCUMENT CONTAINS PROPRIETARY INFORMATION OF WULFSBERG ELECTRONICS DIVISION, A CHELTON GROUP COMPANY. NEITHER RECEIPT NOR POSSESSION THEREOF CONFERS ANY RIGHT TO REPRODUCE, OR USE, OR DISCLOSE, IN WHOLE OR IN PART, ANY SUCH INFORMATION WITHOUT WRITTEN AUTHORIZATION FROM WULFSBERG ELECTRONICS DIVISION.

DRAWING TITLE
PARTS LIST, RT-5000 HIGH SENSITIVITY MAIN RECEIVER BRD

Wulfsberg Electronics Division
A Chelton Group Company
Prescott, AZ 86301 U.S.A.

SIZE	CAGE CODE	DWG. NO	REV
A	1B7G3	310-015443-03	A
			SCALE

PARTS LIST NOTES

Item	Qty	UM	Part #	Title	Reference
0	RF	RF	300-015443	ASSY DWG RT-5000 RECEIVER BRD	
0	RF	RF	152-015443	SCHEMATIC, RT-5000 RECEIVER BRD	
1	2	EA	118-116599-02	COIL, AIR, .080 ID 2T 26 AWG SMD	**L27 L25**
2	2	EA	118-116599-03	COIL, AIR, .080 ID 3T 26 AWG SMD	**L24 L28**
3	3	EA	118-116599-04	COIL, AIR, .080 ID 4T 26 AWG SMD	**L18 L26 L20**
4	2	EA	118-116599-07	COIL, AIR, .080 ID 7T 26 AWG SMD	**L17 L21**
5	1	EA	118-116599-10	COIL, AIR, .080 ID 10T 26 AWG SMD	**L19**
6	2	EA	120-03020-0000	IC MC1350P	**U5 U6**
7	61	EA	106-04103-0047	CAPACITOR, .01UF 50V CHIP 1206	**C144 C107 C110 C114 C117 C120 C122 C123 C135 C142 C10 C145 C146 C150 C151 C152 C153 C2 C141 C255 C503 C53 C506 C507 C75 C81 C44 C106 C97 C104 C93 C90 C71 C69 C59 C50 C500 C103 C405 C43 C253 C406 C20 C404 C403 C402 C400 C37 C35 C305 C28 C263 C262 C261 C260 C21 C258 C256 C254 C9 C29**
8	1	EA	210-016527-274	CAPACITOR, CHIP .27UF 25V X7R	**C229**
9	3	EA	106-04059-0011	CAPACITOR, 0.5PF +-.25PF 50V NPO 1206	**C63 C65 C302**
10	1	EA	210-016527-564	CAPACITOR, CHIP .56UF 25V Z5U	**C230**
11	6	EA	106-04109-0011	CAPACITOR, 1.0PF +-.25PF 50V NPO 1206	**C350 C189 C198 C598 C597 C351**
12	10	EA	096-01186-0080	CAPACITOR, 1.0UF 35V 20% CHIP TANT	**C162 C156 C154 C155 C157 C158 C159 C161 C205 C160**
13	2	EA	106-04229-0011	CAPACITOR, 2.2PF +-.25PF 50V NPO 1206	**C66 C62**
14	7	EA	106-04279-0011	CAPACITOR, 2.7PF +-.25PF 50V NPO 1206	**C510 C12 C532 C509 C16 C13 C64**
15	13	EA	201-016418-03	CAPACITOR, ADJ 3-10PF SMD	**C129 C327 C609 C92 C95 C130 C102 C100 C326 C109 C112 C116 C118**
16	1	EA	106-04159-0011	CAPACITOR, 1.5PF +-.25PF 50V NPO 1206	**C101**
17	2	EA	106-04479-0011	CAPACITOR, 4.7PF +-.25PF 50V NPO 1206	**C125 C139**
18	2	EA	106-04569-0011	CAPACITOR, 5.6PF +-.25PF 50V NPO 1206	**C5 C94**
20	2	EA	210-1159-650	CAPACITOR, PORCELAIN 1.5PF+/-.25 500V	**C601 C604**

Item	Qty	UM	Part #	Title	Reference
21	3	EA	106-04829-0011	CAPACITOR, 8.2PF +-.25PF 50V NPO 1206	**C27 C415 C26**
22	13	EA	106-04100-0016	CAPACITOR, 10PF 5% 50V NPO 1206	**C414 C228 C502 C54 C307 C505 C24 C401 C306 C304 C303 C246 C508**
23	6	EA	106-04120-0016	CAPACITOR, 12PF 5% 50V NPO 1206	**C105 C34 C30 C19 C113 C108**
24	6	EA	106-04150-0016	CAPACITOR, 15PF 5% 50V NPO 1206	**C119 C131 C325 C611 C111 C608**
25	1	EA	106-04759-0011	CAPACITOR, 7.50PF +-.25PF 50V NPO 1206	**C32**
26	11	EA	106-04180-0016	CAPACITOR, 18PF 5% 50V NPO 1206	**C132 C99 C98 C33 C31 C22 C148 C136 C127 C124 C138**
27	4	EA	210-1189-650	CAPACITOR, PORCELAIN 1.8PF+/-.25 500V	**C602 C603 C605 C606**
28	3	EA	106-04220-0016	CAPACITOR, 22PF 5% 50V NPO 1206	**C91 C15 C96**
29	4	EA	106-04270-0016	CAPACITOR, 27PF 5% 50V NPO 1206	**C313 C312 C25 C18**
30	4	EA	106-04330-0016	CAPACITOR, 33PF 5% 50V NPO 1206	**C115 C128 C23 C6**
31	46	EA	106-04333-0047	CAPACITOR, .033UF 10% 50V X7R 1206	**C165 C170 C163 C184 C166 C179 C178 C173 C172 C171 C180 C143 C243 C231 C233 C234 C238 C239 C182 C241 C222 C244 C245 C248 C257 C418 C422 C240 C203 C183 C213 C193 C194 C195 C200 C226 C202 C225 C204 C212 C214 C220 C221 C181 C201 C219**
32	4	EA	106-04390-0016	CAPACITOR, 39PF 5% 50V NPO 1206	**C140 C185 C186 C11**
33	3	EA	106-04560-0016	CAPACITOR, 56PF 5% 50V NPO 1206	**C8 C17 C14**
34	1	EA	106-04680-0016	CAPACITOR, 68PF 5% 50V NPO 1206	**C250**
35	1	EA	106-04820-0016	CAPACITOR, 82PF 5% 50V NPO 1206	**C3**
36	8	EA	106-04101-0016	CAPACITOR, 100PF 50V CHIP 1206	**C68 C311 C237 C504 C235 C190 C70 C77**
37	3	EA	106-04151-0016	CAPACITOR, 150PF 5% 50V NPO 1206	**C7 C252 C4**
38	2	EA	106-04181-0016	CAPACITOR, 180PF 5% 50V NPO 1206	**C149 C247**
39	4	EA	106-04221-0016	CAPACITOR, 220PF 5% 50V NPO 1206	**C242 C177 C176 C121**
40	2	EA	106-04331-0016	CAPACITOR, 330PF 5% 50V NPO 1206	**C168 C199**
41	3	EA	106-04391-0016	CAPACITOR, 390PF 5% 50V NPO 1206	**C251 C249 C167**
42	1	EA	106-04471-0016	CAPACITOR, 470PF 5% 50V NPO 1206	**C511**
43	4	EA	106-04182-0016	CAPACITOR, 1800PF 5% 50V NPO 1206	**C61 C56 C57 C60**
44	1	EA	106-04332-0047	CAPACITOR, 3300PF 10% 50V X7R 1206	**C164**
45	3	EA	106-04681-0016	CAPACITOR, 680PF 5% 50V NPO 1206	**C216 C197 C210**

Item	Qty	UM	Part #	Title	Reference
46	36	EA	106-04102-0016	CAPACITOR, 1000PF 5% 50V NPO 1206	**C192 C1 C52 C188 C58 C133 C187 C76 C73 C196 C147 C174 C134 C223 C175 C211 C191 C413 C224 C227 C36 C407 C408 C409 C410 C600 C412 C72 C416 C417 C419 C420 C421 C74 C55 C411**
47	4	EA	106-04122-0016	CAPACITOR, 1200PF 5% 50V NPO 1206	**C215 C209 C208 C218**
48	1	EA	106-04152-0016	CAPACITOR, 1500PF 5% 50V NPO 1206	**C169**
49	1	EA	210-0309-650	CAPACITOR, CHIP 3.0 PF .25 500V	**C47**
50	2	EA	210-0399-650	CAPACITOR, CHIP 3.9 PF .25 500V	**C45 C49**
51	3	EA	210-0479-650	CAPACITOR, CHIP 4.7 PF .25 500V	**C40 C46 C48**
52	2	EA	210-0629-650	CAPACITOR, CHIP 6.2 PF .25 500V	**C39 C41**
53	2	EA	210-0689-650	CAPACITOR, CHIP 6.8 PF .25 500V	**C42 C38**
54	1	EA	129-216459-01	CONN EURO 32 PIN	**P5**
55	1	EA	129-216460-18	CONNECTOR 18 PIN HEADER	**J7**
56	2	EA	129-216457-01	CONNECTOR SMB FEM RT ANGLE PC MT	**J11 J9**
58	1	EA	139-016520-01	CRYSTAL 20.945 MHZ HC45	**Y1**
59	1	EA	139-016520-02	CRYSTAL 21.855 MHZ HC45	**Y2**
60	8	EA	106-516396-01	DIODE, BAV70L DUAL SW SMD	**CR28 CR29 CR30 CR20 CR36 CR31 CR32 CR33**
61	3	EA	106-515984-01	DIODE, BAW56L SWITCHING SMD	**CR403 CR401 CR402**
62	8	EA	106-616269-01	DIODE, PIN HSMP-3800-L30 SMD	**CR407 CR13 CR14 CR15 CR16 CR17 CR18 CR408**
63	7	EA	106-615982-01	DIODE, PIN HSMP3823 SMD	**CR5 CR400 CR4 CR1 CR8 CR9 CR12**
64	11	EA	106-616444-01	DIODE HSMP3824 RF DUAL PIN	**CR21 CR6 CR10 CR11 CR2 CR22 CR23 CR24 CR404 CR7 CR3**
65	2	EA	106-514278-01	DIODE, BAV99 DUAL SERIES SW	**CR405 CR406**
66	7	EA	106-514806-01	DIODE, MMBD914 SWITCH SMD	**CR501 CR25 CR26 CR27 CR35 CR502 CR34**
67	1	EA	139-216425-01	FILTER 21.4 MHZ 10KHZ BW MATCHED PAIR	**F3A F3B**
68	1	EA	139-216423-01	FILTER 21.4 MHZ 22KHZ BW MATCHED PAIR	**F4A F4B**
69	1	EA	139-216424-01	FILTER 21.4 MHZ 39KHZ BW 2PR	**F5A F5B**
70	2	EA	139-217996-01	FILTER 21.4 MHZ 84KHZ BW MATCHED PAIR	**F6A F6B F6C F6D**
71	2	EA	139-216844-01	FILTER 1675 MHZ CERAMIC MICROW	**F2 F1**
72	3	EA	139-215790-01	FILTER EMI T-TYPE 2200PF RADIAL	**F14 F13 F11**
73	1	EA	139-216427-01	FILTER CFM455G 455 KHZ CERAMIC	**F10**
74	1	EA	139-216426-01	FILTER CFM455E 455 KHZ CERAMIC	**F9**
75	1	EA	139-2020-000	FILTER CFM455D 455 KHZ CERAMIC	**F8**
76	1	EA	139-2012-000	FILTER CFM455A 455 KHZ CERAMIC	**F7**
77	2	EA	118-216428-01	BALANCED MIXER +17DBM	**MX2 MX1**
78	1	EA	015-00058-0002	MXR SRA-1	**MX3**
79	1	EA	106-714779-02	I.C., 74HC138AD 3-8 LINEDECD	**U14**

Item	Qty	UM	Part #	Title	Reference
80	1	EA	120-03026-0080	IC 78M05 DPAK VOLT REG. SMD	**VR2**
81	1	EA	106-716452-01	I.C., 78M12 12V REG	**VR1**
82	1	EA	106-716327-01	I.C., 79M12 -12V REG	**VR3**
83	1	EA	106-716451-01	I.C., MC79M05CDT -5 VOLT REG SMD	**VR4**
84	3	EA	120-03052-0006	IC LM324M QUAD OP AMP	**U10 U18 U9**
86	1	EA	120-03053-0009	IC LM358D DUAL OP AMP	**U501**
87	2	EA	106-716456-01	I.C., MSA1105 1.3GHZ W.B. AMP SMD	**U400 U2**
88	1	EA	106-716446-03	I.C., SA602D DOUBLE MIXER (SMD)	**U7**
89	1	EA	106-716447-03	I.C., NE604AD FM IF/DEMOD SMD	**U11**
90	2	EA	106-716271-02	I.C., PCF8574TD 8 BIT SMD	**U13 U12**
91	2	EA	106-714804-02	I.C., TL074I QUAD JFET-INP OPAMP	**U17 U8**
92	1	EA	106-714813-04	I.C., ULN2003L OPEN COLLECTOR DRIVER	**U16**
93	1	EA	019-02723-0003	INDUCTOR 18NH 20% 450MA 1210	**L501**
94	2	EA	019-02723-0006	INDUCTOR 33NH 20% 390MA 1210	**L61 L60**
95	4	EA	019-02723-0015	INDUCTOR .18UH 20% 220MA 1210	**L45 L402 L30 L43**
96	4	EA	019-02723-0019	INDUCTOR .39UH 20% 170MA 1210	**L405 L404 L44 L46**
97	16	EA	019-02723-0024	INDUCTOR 1.0UH 10% 235MA 1210	**L403 L401 L400 L32 L31 L14 L16 L23 L29 L22 L1 L78 L7 L15 L70 L8**
98	2	EA	118-114276-1R5	INDUCTOR, 1.5UH 10% CHIP	**L66 L64**
99	8	EA	019-02723-0027	INDUCTOR 1.8UH 10% 190MA 1210	**L57 L56 L55 L65 L74 L54 L73 L67**
100	13	EA	019-02723-0028	INDUCTOR 2.2UH 10% 180MA 1210	**L69 L71 L75 L76 L77 L72 L53 L68 L63 L62 L59 L58 L52**
101	2	EA	019-02723-0035	INDUCTOR 8.2UH 10% 120MA 1210	**L80 L79**
102	1	EA	019-02723-0041	INDUCTOR 27UH 5% 68MA 1210	**L88**
103	2	EA	118-114276-820	INDUCTOR, 82UH 10% CHIP	**L108 L109**
104	2	EA	118-117937-01	INDUCTOR, 80 NH TOROID	**L10 L12**
105	3	EA	019-02723-0046	INDUCTOR 68UH 5% 42MA 1210	**L83 L107 L110**
106	1	EA	118-117823-01	INDUCTOR FIXED, RF TOROID 2.5UH	**L601**
107	17	EA	019-02723-0048	INDUCTOR 100UH 5% 37MA 1210	**L81 L85 L86 L94 L84 L99 L100 L93 L92 L87 L502 L91 L306 L305 L104 L103 L503**
108	2	EA	118-116832-01	INDUCTOR, 122 NH TOROID	**L5 L3**
109	2	EA	118-117936-01	INDUCTOR, 115 NH TOROID	**L9 L13**
110	1	EA	019-02723-0051	INDUCTOR 180UH 5% 31MA 1210	**L82**
111	2	EA	019-02723-0052	INDUCTOR 220UH 5% 30MA 1210	**L351 L350**
112	1	EA	118-116831-01	INDUCTOR, 231NH TOROID	**L11**
113	2	EA	118-116827-01	INDUCTOR, 263NH TOROID	**L6 L2**
114	1	EA	118-116830-01	INDUCTOR, 403NH TOROID	**L4**
115	1	EA	118-716573-680	INDUCTOR, 680UH SHIELDED ADJ	**L112**
116	3	EA	111-016448-01	SPACER INSULATING FREQ MIXER	**MX3 MX2 MX1**
117	2	EA	089-02744-0022	NUT, FLAT 2-56	
118	1	EA	108-615443-01	PWB RT-5000 RECEIVER	**A5**

Item	Qty	UM	Part #	Title	Reference
119	3	EA	139-00100-0000	RESISTOR 10 OHM 1% 100PPM 1/8W 1206	**R62 R63 R159**
120	2	EA	139-00200-0000	RESISTOR 20.0 OHM 1% 100PPM 1/8W 1206	**R202 R205**
121	8	EA	139-00475-0000	RESISTOR 47.5 OHM 1% 100PPM 1/8W 1206	**R54 R101 R25 R402 R551 R98 R500 R403**
122	2	EA	139-00499-0000	RESISTOR 49.9 OHM 1% 100PPM 1/8W 1206	**R414 R415**
123	11	EA	139-00698-0000	RESISTOR 69.8X OHM 1% 100PPM 1/8W 1206	**R18 R507 R506 R401 R400 R23 R22 R19 R17 R16 R204**
124	14	EA	139-01000-0000	RESISTOR 100 OHM 1% 100PPM 1/8W 1206	**R74 R92 R88 R83 R77 R58 R550 R49 R46 R43 R38 R35 R137 R82**
125	2	EA	139-01500-0000	RESISTOR 150 OHM 1% 100PPM 1/8W 1206	**R68 R67**
126	2	EA	139-01820-0000	RESISTOR 182 OHM 1% 100PPM 1/8W 1206	**R71 R59**
127	2	EA	139-02210-0000	RESISTOR 221 OHM 1% 100PPM 1/8W 1206	**R406 R407**
128	3	EA	139-03010-0000	RESISTOR 301 OHM 1% 100PPM 1/8W 1206	**R201 R203 R200**
129	2	EA	139-03320-0000	RESISTOR 332 OHM 1% 100PPM 1/8W 1206	**R51 R76**
130	8	EA	139-04320-0000	RESISTOR 432 OHM 1% 100PPM 1/8W 1206	**R409 R410 R408 R26 R14 R413 R412 R411**
131	1	EA	139-04750-0000	RESISTOR 475 OHM 1% 100PPM 1/8W 1206	**R115**
132	11	EA	139-05110-0000	RESISTOR 511 OHM 1% 100PPM 1/8W 1206	**R300 R91 R90 R87 R86 R85 R84 R81 R80 R79 R78**
133	2	EA	139-05620-0000	RESISTOR 562 OHM 1% 100PPM 1/8W 1206	**R64 R52**
134	14	EA	139-08250-0000	RESISTOR 825 OHM 1% 100PPM 1/8W 1206	**R10 R8 R7 R6 R5 R405 R12 R404 R4 R2 R11 R1 R9 R3**
135	5	EA	139-01001-0000	RESISTOR 1000 OHM 1% 100PPM 1/8W 1206	**R100 R133 R510 R511 R61**
136	10	EA	139-01501-0000	RESISTOR 1.5K OHM 1% 100PPM 1/8W 1206	**R44 R15 R27 R36 R37 R39 R42 R45 R47 R40**
138	1	EA	139-01691-0000	RESISTOR 1.69K OHM 1% 100PPM 1/8W 1206	**R140**
139	1	EA	139-02001-0000	RESISTOR 2K OHM 1% 100PPM 1/8W 1206	**R130**
140	1	EA	139-02211-0000	RESISTOR 2.21K OHM 1% 100PPM 1/8W 1206	**R75**
141	2	EA	139-02431-0000	RESISTOR 2.43K OHM 1% 100PPM 1/8W 1206	**R66 R301**
142	2	EA	139-03011-0000	RESISTOR 3.01K OHM 1% 100PPM 1/8W 1206	**R60 R141**
144	7	EA	139-03651-0000	RESISTOR 3.65K OHM 1% 100PPM 1/8W 1206	**R169 R173 R175 R177 R179 R193 R171**
145	2	EA	15500-472	RESISTOR SIP 4.7K	**RP1 RP2**
146	5	EA	139-05111-0000	RESISTOR 5.11K OHM 1% 100PPM 1/8W 1206	**R24 R57 R50 R65 R13**
147	2	EA	139-06191-0000	RESISTOR 6.19K OHM 1% 100PPM 1/8W 1206	**R151 R152**
148	9	EA	139-06811-0000	RESISTOR 6.81K OHM 1% 100PPM 1/8W 1206	**R112 R105 R103 R104 R110 R56 R153 R109 R106**
149	1	EA	139-08251-0000	RESISTOR 8.25K OHM 1% 100PPM 1/8W 1206	**R149**
150	4	EA	139-08871-0000	RESISTOR 8.87K OHM 1% 100PPM 1/8W 1206	**R154 R150 R148 R147**

Item	Qty	UM	Part #	Title	Reference
151	29	EA	139-01002-0000	RESISTOR 10K OHM 1% 100PPM 1/8W 1206	**R134 R135 R129 R160 R161 R143 R127 R123 R120 R119 R117 R180 R121 R207 R94 R351 R350 R53 R208 R181 R189 R188 R187 R186 R185 R184 R183 R182 R209**
152	3	EA	139-01502-0000	RESISTOR 15K OHM 1% 100PPM 1/8W 1206	**R122 R73 R96**
153	1	EA	139-01622-0000	RESISTOR 16.2K OHM 1% 100PPM 1/8W 1206	**R97**
154	12	EA	139-02002-0000	RESISTOR 20.0K OHM 1% 100PPM 1/8W 1206	**R176 R192 R102 R155 R167 R168 R170 R172 R191 R178 R95 R174**
155	2	EA	139-02742-0000	RESISTOR 27.4K OHM 1% 100PPM 1/8W 1206	**R107 R108**
156	3	EA	139-03012-0000	RESISTOR 30.1K OHM 1% 100PPM 1/8W 1206	**R146 R165 R190**
158	1	EA	139-04752-0000	RESISTOR 47.5K OHM 1% 100PPM 1/8W 1206	**R116**
159	3	EA	139-08252-0000	RESISTOR 82.5K OHM 1% 100PPM 1/8W 1206	**R525 R528 R111**
160	7	EA	139-01003-0000	RESISTOR 100K OHM 1% 100PPM 1/8W 1206	**R124 R126 R142 R144 R145 R69 R70**
161	2	EA	139-01403-0000	RESISTOR 140K OHM 1% 100PPM 1/8W 1206	**R158 R206**
162	1	EA	139-03653-0000	RESISTOR 365K OHM 1% 100PPM 1/8W 1206	**R157**
163	3	EA	139-04323-0000	RESISTOR 432K OHM 1% 100PPM 1/8W 1206	**R118 R518 R113**
164	1	EA	139-06190-0000	RESISTOR 619 OHM 1% 100PPM 1/8W 1206	**R136**
165	1	EA	139-01004-0000	RESISTOR 1M OHM 1% 100PPM 1/8W 1206	**R114**
166	1	EA	139-00000-0004	RESISTOR ZERO OHM JUMPER 1206	**R139**
168	2	EA	MS51957-7	SCREW, 2-56 X 1/2 PHP	
169	AR	AR	16005-1	WHITE SILICONE GLUE & SEAL (RTV-162)	
170	2	EA	118-217468-01	XFMR RF TOROID	**T3 T4**
171	1	EA	118-217469-01	XFMR RF TOROID	**T5**
172	2	EA	118-216926-01	XFMR RF RT-5000 RX	**T2 T1**
173	2	EA	007-00815-0000	XSTR FET MMBFU310	**Q7 Q1**
174	1	EA	007-00998-0000	XSTR BFS17 NPN SILICON	**Q2**
175	10	EA	106-014270-01	XSTR MMBT3904 NPN 60V 200MA	**Q12 Q18 Q19 Q11 Q13 Q17 Q28 Q30 Q4 Q5**
176	12	EA	007-00065-0001	XSTR MMBT3906 PNP 40V 100MA	**Q27 Q21 Q29 Q26 Q14 Q25 Q23 Q16 Q22 Q15 Q20 Q24**
177	1	EA	106-015981-01	TRANSISTOR MRF9511L NPN (SMD)	**Q300**
178	1	EA	007-00588-0001	XSTR POWER FET 60V SMT	**Q6**
179	2	EA	106-016361-01	XSTR VN0605T N-CH SMD	**Q9 Q31**
180	3	EA	233-014274-104	POTENTIOMETER, CHIP SM 100 OHMS	**R125 R128 R517**
181	2	EA	146-016352-01	SHIELD TUBE LO RT-5000	**P16 P17**
182	2	EA	MS35338-134	WASHER, SPLITLOCK #2	
183	1	EA	106-016393-01	XSTR MMBR951L PNP RF SMD	**Q3**

Item	Qty	UM	Part #	Title	Reference
184	2	EA	106-617885-01	DIODE, HSMP3822 DUAL PIN SMD	**CR409 CR410**
185	2	EA	118-116677-01	INDUCTOR, FIXED TOROID	**L111 L504**
186	6	EA	019-02723-0049	INDUCTOR 120UH 5% 35MA 1210	**L102 L95 L96 L97 L98 L101**
187	6	EA	16080-2	PERM-O-PAD 301-150	
188	1	EA	300-317867-01	SHIELD FENCE RT-5000 RECEIVER	
189	1	EA	300-317868-01	SHIELD FENCE RT-5000 RECEIVER	
190	1	EA	300-317868-02	SHIELD FENCE RT-5000 RECEIVER	
191	1	EA	300-317868-03	SHIELD FENCE RT-5000 RECEIVER	
192	1	EA	300-317866-01	SHIELD FENCE RT-5000 RECEIVER	
193	1	EA	146-018101-01	SHIELD FENCE RT-5000 IF AMP	
194	2	EA	233-018201-502	TRIMPOT 5K SMT	**R508 R131**
195	1	EA	234-014791-1651	RESISTOR CHIP 1.65K OHM 1/8W 1%	**R55**
196	2	EA	106-740744-01	I.C. NGA-586 MMIC AMPLIFIER 50 OHMS SMD	**U502 U503**
197	1	EA	118-216601-04	XFMR COAXIAL BALUN	**TL1**
198	1	EA	118-216601-03	XFMR COAXIAL BALUN	**TL2**

DOC NO.	REV
310-015471-01	V

REVISIONS

Rev	DCN	Requested by	Cognizant Engineer Last Rev Signed on Master	Doc. Control Approval Last Rev Signed on Master	Release Date Completed on Master
R	W375	Michael May	Michael May	Montgomery of AlliedS	2/16/99
S	W726	D. WOODHURST	S.Elliott	VERN WALLACE	8/25/99
T	W908	Diana Woodhurst	Tom Tammen	Vern Wallace	1/25/00
U	W1225	Mike May		Vern Wallace	10/2/00
V	W1362	Jennifer Merwin		Vern Wallace	

Note:
This may be a partial list. Refer to DOCIDX for those DCN's which have changed the associated part data in the WEEDS database but not affected this document.

THIS DOCUMENT CONTAINS PROPRIETARY INFORMATION OF WULFSBERG ELECTRONICS DIVISION, A CHELTON GROUP COMPANY. NEITHER RECEIPT NOR POSSESSION THEREOF CONFERS ANY RIGHT TO REPRODUCE, OR USE, OR DISCLOSE, IN WHOLE OR IN PART, ANY SUCH INFORMATION WITHOUT WRITTEN AUTHORIZATION FROM WULFSBERG ELECTRONICS DIVISION.

DRAWING TITLE

PARTS LIST, RT-5000 SYNTHESIZER

Wulfsberg Electronics Division
A Chelton Group Company
Prescott, AZ 86301 U.S.A.

SIZE	CAGE CODE	DWG. NO	REV
A	1B7G3	310-015471-01	V
			SCALE

Next Level of Assembly:

P/N	*Title*
300-015471-01	ASSY RT-5000 SYNTHESIZER BRD
310-016330-01AB	PARTS LIST, RT-5000 RX/SYNTHESIZER MDL

PARTS LIST NOTES

Item	Qty	UM	Part #	Title	Reference
0	RF	RF	300-015471	ASSY DWG RT-5000 SYNTHESIZER BRD	
0	RF	RF	152-015471	SCHEMATIC RT-5000 SYNTHESIZER BRD	
1	3	EA	106-04333-0047	CAPACITOR .033uF 10% 50V X7R 1206	C671 C650 C128
2	1	EA	106-04683-0047	CAPACITOR .068uF 10% 50V X7R 1206	C672
3	150	EA	106-04224-0047	CAPACITOR .22uF 10% 50V X7R 1206	C25 C252 C26 C301 C31 C242 C302 C249 C246 C243 C327 C240 C24 C238 C236 C245 C505 C504 C503 C502 C501 C321 C310 C331 C330 C328 C212 C322 C233 C32 C311 C112 C129 C126 C121 C120 C119 C118 C116 C227 C113 C132 C111 C110 C109 C106 C105 C104 C103 C114 C19 C229 C228 C506 C22 C609 C211 C21 C130 C204 C131 C143 C139 C138 C137 C136 C135 C134 C232 C205 C737 C607 C901 C839 C837 C835 C822 C821 C903 C813 C904 C736 C692 C691 C690 C677 C676 C675 C819 C919 C945 C930 C929 C928 C927 C925 C922 C902 C920 C666 C918 C917 C916 C915 C912 C906 C905 C921 C610 C629 C628 C627 C624 C620 C616 C615 C674 C611 C635 C18 C608 C102 C606 C605 C604 C535 C614 C647 C534 C665 C664 C663 C660 C658 C656 C630 C648 C634 C646 C645 C644 C643 C642 C640 C637 C673 C655 C1 C101 C2
4	2	EA	204-016669-474	CAPACITOR .47 uF CHIP POLY FILM 10%	C28 C230
5	1	EA	210-014281-R75	CAPACITOR CHIP 0.75pF +-.25pF 50V 5%	C537
6	6	EA	106-04129-0011	CAPACITOR 1.2pF +-.5pF 50V NPO 1206	C719 C817 C816 C726 C721 C720

Item	Qty	UM	Part #	Title	Reference
7	2	EA	106-04159-0011	CAPACITOR 1.5pF +-.25pF 50V NPO 1206	C5 C832
8	76	EA	106-04102-0016	CAPACITOR 1000pF 5% 50V NPO 1206	C510 C518 C705 C636 C626 C603 C602 C601 C532 C523 C517 C515 C514 C312 C509 C527 C226 C115 C13 C14 C15 C16 C17 C20 C217 C218 C221 C222 C223 C318 C225 C23 C237 C247 C303 C309 C308 C313 C712 C319 C320 C332 C224 C940 C838 C840 C9 C926 C931 C932 C830 C936 C935 C941 C942 C943 C944 C715 C3 C934 C741 C716 C939 C828 C728 C718 C743 C744 C815 C826 C727 C825 C814 C811 C803 C801
9	9	EA	106-04101-0016	CAPACITOR 100pF 5% 50V NPO 1206	C125 C938 C923 C914 C913 C911 C937 C910 C933
10	8	EA	106-04100-0016	CAPACITOR 10pF 5% 50V NPO 1206	C820 C7 C633 C631 C512 C267 C215 C306
11	1	EA	106-04110-0016	CAPACITOR 11pF 5% 50V NPO 1206	C304
12	4	EA	106-04152-0016	CAPACITOR 1500pF 5% 50V NPO 1206	C337 C315 C336 C329
13	3	EA	106-04150-0016	CAPACITOR 15pF 5% 50V NPO 1206	C122 C507 C621
14	1	EA	106-04162-0016	CAPACITOR 1600pF 5% 50V NPO 1206	C649
15	2	EA	106-04182-0016	CAPACITOR 1800pF 5% 50V NPO 1206	C625 C117
16	2	EA	106-04180-0016	CAPACITOR 18pF 5% 50V NPO 1206	C632 C270
17	5	EA	106-04109-0011	CAPACITOR 1.0pF +-.25pF 50V NPO 1206	C248 C265 C508 C521 C539
18	3	EA	106-04249-0011	CAPACITOR 2.4pF +-.25pF 50V NPO 1206	C264 C818 C213
19	4	EA	106-04200-0016	CAPACITOR 20pF 5% 50V NPO 1206	C802 C831 C613 C618
20	5	EA	106-04221-0016	CAPACITOR 220pF 5% 50V NPO 1206	C661 C722 C639 C638 C124
21	2	EA	210-014807-476	CAPACITOR CHIP 47uF 10V TANT 20%	C908 C948
22	1	EA	106-04270-0016	CAPACITOR 27pF 5% 50V NPO 1206	C314
23	2	EA	106-04209-0011	CAPACITOR 2.0pF +-.25pF 50V NPO 1206	C711 C703
24	2	EA	106-04399-0011	CAPACITOR 3.9pF +-.25pF 50V NPO 1206	C307 C305
25	4	EA	106-04331-0016	CAPACITOR 330pF 5% 50V NPO 1206	C808 C809 C706 C810
27	7	EA	106-04330-0016	CAPACITOR 33pF 5% 50V NPO 1206	C805 C742 C511 C729 C519 C513 C516
28	7	EA	106-04391-0016	CAPACITOR 390pF 5% 50V NPO 1206	C244 C812 C657 C325 C251 C219 C324
29	4	EA	096-01187-0045	CAPACITOR CHIP 4.7 uF TANTALUM	C947 C949 C127 C946
30	6	EA	106-04409-0011	CAPACITOR 4.0pF +-.25pF 50V NPO 1206	C536 C8 C529 C525 C530 C4
31	5	EA	106-04569-0011	CAPACITOR 5.6pF +-.25pF 50V NPO 1206	C710 C709 C708 C6 C253

Item	Qty	UM	Part #	Title	Reference
32	29	EA	106-04510-0016	CAPACITOR 51pF 5% 50V NPO 1206	C834 C735 C804 C806 C807 C824 C717 C829 C704 C836 C827 C524 C220 C235 C29 C323 C333 C713 C522 C714 C528 C531 C533 C701 C702 C707 C140 C520 C538
33	2	EA	106-04562-0047	CAPACITOR 5600pF 10% 50V X7R 1206	C612 C641
34	2	EA	106-04609-0011	CAPACITOR 6.0pF +-.25pF 50V NPO 1206	C266 C214
35	3	EA	106-04821-0016	CAPACITOR 820pF 5% 50V NPO 1206	C326 C907 C142
36	4	EA	106-04332-0047	CAPACITOR 3300pF 10% 50V X7R 1206	C622 C617 C619 C623
37	1	EA	106-04829-0011	CAPACITOR 8.2pF +-.25pF 50V NPO 1206	C335
38	2	EA	118-717473-04	TRANSMISSION LINE COAXIAL	TL1 TL2
39	1	EA	118-717473-03	TRANSMISSION LINE COAXIAL	TL201
40	1	EA	118-216601-02	XFMR COAXIAL BALUN	TL501
41	1	EA	129-216457-01	CONNECTOR SMB FEM RT ANGLE PC MT	J15
42	1	EA	129-216474-18	CONNECTOR 18 POS RECEPT SMD	P7
43	1	EA	139-016955-01	CRYSTAL 13.2 MHz HC-35/U	Y102
44	3	EA	106-615987-01	DIODE, PIN BAR16-1 DUAL SMD	CR404 CR405 CR407
45	3	EA	106-516336-01	DIODE, BAS40-04 DUAL SHTKY SMD	CR602 CR601 CR501
46	4	EA	106-516396-01	DIODE, BAV70L DUAL SW SMD	CR403 CR402 CR401 CR408
47	6	EA	106-515984-01	DIODE, BAW56L SWITCHING SMD	CR304 CR208 CR106 CR5 CR603 CR400
48	3	EA	106-616269-01	DIODE, PIN HSMP-3800-L30 SMD	CR230 CR201 CR231
50	16	EA	106-514278-01	DIODE, BAV99 DUAL SERIES SW	CR701 CR702 CR704 CR206 CR207 CR211 CR3 CR4 CR803 CR502 CR600 CR605 CR806 CR807 CR7 CR305
51	17	EA	007-04057-0000	DIODE, MMBV105G	CR801 CR802 CR804 CR805 CR808 CR303 CR205 CR809 CR102 CR302 CR221 CR219 CR202 CR204 CR218 CR209 CR1
52	1	EA	007-05117-0005	DIODE, MMBZ5231B ZNR 5.1V SOT	CR901
53	32	EA	112-014328-01	BEAD, FERRITE, SMALL SMD	FB501 FB906 FB802 FB803 FB902 FB901 FB1 FB301 FB903 FB707 FB905 FB805 FB907 FB908 FB909 FB910 FB911 FB912 FB913 FB914 FB904 FB503 FB2 FB201 FB202 FB203 FB302 FB502 FB706 FB705 FB702 FB701
54	1	EA	106-716332-02	IC 74F00D QUAD NAND SMD	U612
55	1	EA	106-716333-02	IC 74F08D QUAD 2-IN AND SMD	U608
56	1	EA	106-716334-02	IC 74F74D DUAL D FLIP FLOP SMD	U613
57	1	EA	123-00004-0003	IC 74HC04 SO PKG	U917
58	1	EA	106-714779-02	IC 74HC138AD 3-8 LINEDECD	U911

Item	Qty	UM	Part #	Title	Reference
59	2	EA	123-00164-0003	IC 74HC164 8-BIT SERIAL-IN PARALLELL OUT S-REG	U905 U904
60	1	EA	123-00032-0003	IC 74HC32D SO PKG	U915
61	2	EA	106-714781-02	IC 74HC373DW OCTAL LATCH SMD	U910 U909
62	1	EA	123-04075-0003	IC 74HC4075 SO PKG	U913
63	2	EA	106-716822-02	IC 74HC74A DUAL D FLIP-FLOP SMD	U604 U605
64	1	EA	106-716705-02	IC AT24C02N 256X8 EEPRM SMD	U901
65	5	EA	120-03533-0000	IC LM883 AMP OP DUAL	U102 U301 U609 U610 U611
66	3	EA	106-715989-02	IC MB504pF PRESCALER 520MHzSMD	U303 U4 U204
67	1	EA	106-716561-02	IC MB507pF PRESCLR 1.6GHz SMD	U601
68	1	EA	106-715999-02	IC MB501pF 1.1GHz PRESCLR SMD	U302
69	5	EA	106-715998-02	IC MC145158DW2 PLL SMD	U602 U5 U304 U101 U205
70	3	EA	123-00002-0003	IC MC74HC02D QUAD 2-IN NOR	U203 U3 U918
71	2	EA	106-716704-02	IC MP7543KS 12 BIT DAC	U908 U907
72	1	EA	106-716271-02	IC PCF8574TD 8 BIT SMD	U912
73	2	EA	106-714804-03	IC TL074CD QUAD OP AMP SMD	U914 U916
74	3	EA	106-740795-02	I.C. UPB1508GV MMIC PRESCALER 3.0 GHz SMD	U401 U402 U405
75	1	EA	106-740745-02	I.C. UPB1509GV MMIC PRESCALER 1.0GHz SMD	U403
76	3	EA	106-715993-02	IC UPC1676G 1.2GHz W.B.AMP SMD	U503 U202 U2
77	1	EA	106-740744-01	I.C. NGA-586 MMIC AMPLIFIER 50 OHMS SMD	U404
78	5	EA	118-116677-01	INDUCTOR FIXED TOROID	L907 L908 L909 L910 L902
79	6	EA	019-02723-0006	INDUCTOR 33nH 20% 390MA 1210	L807 L702 L803 L810 L503 L502
80	1	EA	019-02723-0008	INDUCTOR 47nH 20% 360MA 1210	L703
81	2	EA	019-02723-0009	INDUCTOR 56nH 20% 340MA 1210	L501 L701
82	3	EA	019-02723-0015	INDUCTOR .18uH 20% 220MA 1210	L901 L104 L209
83	19	EA	019-02723-0024	INDUCTOR 1.0uH 10% 235MA 1210	L304 L303 L302 L3 L801 L4 L604 L802 L218 L217 L603 L213 L208 L207 L206 L2 L1 L215 L301
84	5	EA	019-02723-0027	INDUCTOR 1.8uH 10% 190MA 1210	L601 L905 L606 L605 L602
85	6	EA	019-02723-0049	INDUCTOR 120uH 5% 35MA 1210	L609 L102 L103 L607 L101 L608
86	3	EA	019-02723-0039	INDUCTOR 18uH 5% 80MA 1210	L903 L904 L906
87	AR	AR	111-0023-000	INSULATOR T0-5	
88	AR	AR	16017-20	WIRE, BUS 20AWG	J801
89	5	EA	007-06424-0001	LED, RED SMD	CR107 CR210 CR604 CR6 CR301
90	2	EA	234-014280-335	RESISTOR CHIP 3.3 MEG 1/8W 5%	R119 R102
91	2	EA	233-015974-502	RESISTOR ADJ 5K OHM POT	R924 R910
92	1	EA	139-01211-0000	RESISTOR 1.21K OHM 1% 100PPM 1/8W 1206	R640
93	4	EA	139-01301-0000	RESISTOR 1.30K OHM 1% 100PPM 1/8W 1206	R812 R654 R628 R216
94	5	EA	139-01821-0000	RESISTOR 1.82K OHM 1% 100PPM 1/8W 1206	R672 R671 R670 R635 R259

Item	Qty	UM	Part #	Title	Reference
95	7	EA	139-00100-0000	RESISTOR 10 OHM 1% 100PPM 1/8W 1206	R29 R249 R524 R16 R36 R248 R660
96	15	EA	139-01000-0000	RESISTOR 100 OHM 1% 100PPM 1/8W 1206	R702 R520 R103 R516 R517 R814 R519 R9 R526 R632 R659 R7 R8 R827 R518
97	15	EA	139-01001-0000	RESISTOR 1000 OHM 1% 100PPM 1/8W 1206	R903 R668 R631 R824 R318 R703 R513 R522 R701 R802 R808 R819 R822 R823 R514
98	36	EA	139-01003-0000	RESISTOR 100K OHM 1% 100PPM 1/8W 1206	R503 R603 R314 R502 R334 R320 R1 R101 R13 R133 R606 R140 R235 R261 R264 R301 R14 R901 R313 R932 R927 R921 R918 R916 R813 R902 R623 R837 R828 R826 R815 R801 R673 R642 R626 R913
99	32	EA	139-01002-0000	RESISTOR 10K OHM 1% 100PPM 1/8W 1206	R648 R203 R324 R323 R321 R204 R657 R202 R141 R116 R113 R111 R322 R915 R930 R933 R922 R501 R909 R836 R835 R834 R661 R926 R711 R616 R627 R630 R655 R663 R664 R666
100	1	EA	139-01210-0000	RESISTOR 121 OHM 1% 100PPM 1/8W 1206	R914
101	1	EA	139-01403-0000	RESISTOR 140K OHM 1% 100PPM 1/8W 1206	R125
102	4	EA	139-01502-0000	RESISTOR 15K OHM 1% 100PPM 1/8W 1206	R621 R137 R907 R138
103	2	EA	139-01692-0000	RESISTOR 16.9K OHM 1% 100PPM 1/8W 1206	R908 R247
104	4	EA	139-01500-0000	RESISTOR 150 OHM 1% 100PPM 1/8W 1206	R307 R512 R310 R509
105	7	EA	139-01501-0000	RESISTOR 1.5K OHM 1% 100PPM 1/8W 1206	R109 R124 R127 R147 R504 R536 R706
106	1	EA	139-01620-0000	RESISTOR 162 OHM 1% 100PPM 1/8W 1206	R625
107	6	EA	234-040024-1780	RESISTOR 178 OHM 1% 100PPM 1/16W TKF 0603	R406 R414 R407 R408 R409 R424
108	2	EA	139-01820-0000	RESISTOR 182 OHM 1% 100PPM 1/8W 1206	R17 R237
109	10	EA	139-01004-0000	RESISTOR 1M OHM 1% 100PPM 1/8W 1206	R311 R912 R143 R32 R328 R38 R605 R636 R643 R252
110	8	EA	139-02001-0000	RESISTOR 2K OHM 1% 100PPM 1/8W 1206	R612 R617 R905 R712 R506 R129 R128 R633
111	19	EA	139-02211-0000	RESISTOR 2.21K OHM 1% 100PPM 1/8W 1206	R610 R3 R303 R304 R315 R332 R4 R602 R608 R210 R645 R917 R919 R607 R220 R209 R15 R122 R110
112	3	EA	139-02671-0000	RESISTOR 2.67K OHM 1% 100PPM 1/8W 1206	R112 R931 R10
114	6	EA	139-00200-0000	RESISTOR 20.0 OHM 1% 100PPM 1/8W 1206	R213 R818 R508 R809 R832 R505
115	3	EA	139-02000-0000	RESISTOR 200 OHM 1% 100PPM 1/8W 1206	R20 R652 R649
116	3	EA	139-02003-0000	RESISTOR 200K OHM 1% 100PPM 1/8W 1206	R677 R690 R118
117	5	EA	139-02002-0000	RESISTOR 20.0K OHM 1% 100PPM 1/8W 1206	R200 R335 R833 R904 R123
119	3	EA	139-00232-0000	RESISTOR 23.2 OHM 1% 100PPM 1/8W 1206	R676 R651 R618

Item	Qty	UM	Part #	Title	Reference
120	3	EA	139-00243-0000	RESISTOR 24.3 OHM 1% 100PPM 1/8W 1206	R821 R804 R707
121	1	EA	139-02432-0000	RESISTOR 24.3K OHM 1% 100PPM 1/8W 1206	R920
122	1	EA	139-02430-0000	RESISTOR 243 OHM 1% 100PPM 1/8W 1206	R527
123	2	EA	139-02552-0000	RESISTOR 25.5K OHM 1% 100PPM 1/8W 1206	R135 R136
124	2	EA	139-00274-0000	RESISTOR 27.4 OHM 1% 100PPM 1/8W 1206	R807 R805
125	1	EA	139-02742-0000	RESISTOR 27.4K OHM 1% 100PPM 1/8W 1206	R317
126	4	EA	139-03011-0000	RESISTOR 3.01K OHM 1% 100PPM 1/8W 1206	R121 R331 R108 R333
127	5	EA	139-03921-0000	RESISTOR 3.92K OHM 1% 100PPM 1/8W 1206	R222 R614 R615 R624 R678
128	2	EA	139-03010-0000	RESISTOR 301 OHM 1% 100PPM 1/8W 1206	R246 R24
129	5	EA	139-03013-0000	RESISTOR 301K OHM 1% 100PPM 1/8W 1206	R30 R250 R639 R142 R326
130	1	EA	139-03322-0000	RESISTOR 33.2K OHM 1% 100PPM 1/8W 1206	R604
131	2	EA	139-03320-0000	RESISTOR 332 OHM 1% 100PPM 1/8W 1206	R928 R240
132	5	EA	139-03650-0000	RESISTOR 365 OHM 1% 100PPM 1/8W 1206	R528 R532 R619 R620 R820
133	4	EA	139-00374-0000	RESISTOR 37.4 OHM 1% 100PPM 1/8W 1206	R242 R260 R510 R831
134	4	EA	234-040024-4321	RESISTOR 4.32K OHM 1% 100PPM 1/16W TKF 0603	R402 R404 R423 R427
135	12	EA	139-04320-0000	RESISTOR 432 OHM 1% 100PPM 1/8W 1206	R816 R5 R329 R305 R277 R276 R27 R267 R266 R228 R226 R224
136	4	EA	139-00475-0000	RESISTOR 47.5 OHM 1% 100PPM 1/8W 1206	R236 R705 R257 R669
137	1	EA	234-040024-4752	RESISTOR 47.5K OHM 1% 100PPM 1/16W 0603	R269
139	18	EA	139-00499-0000	RESISTOR 49.9 OHM 1% 100PPM 1/8W 1206	R601 R830 R829 R515 R12 R533 R11 R218 R629 R825 R803 R704 R650 R529 R634 R309 R312 R217
140	6	EA	139-05111-0000	RESISTOR 5.11K OHM 1% 100PPM 1/8W 1206	R31 R327 R251 R273 R653 R256
141	7	EA	139-05621-0000	RESISTOR 5.62K OHM 1% 100PPM 1/8W 1206	R221 R223 R225 R227 R258 R22 R243
142	3	EA	139-08871-0000	RESISTOR 8.87K OHM 1% 100PPM 1/8W 1206	R241 R21 R238
144	13	EA	139-05110-0000	RESISTOR 511 OHM 1% 100PPM 1/8W 1206	R18 R150 R144 R662 R255 R647 R646 R26 R622 R613 R525 R34 R330
145	2	EA	139-00562-0000	RESISTOR 56.2 OHM 1% 100PPM 1/8W 1206	R308 R523
146	1	EA	139-05622-0000	RESISTOR 56.2K OHM 1% 100PPM 1/8W 1206	R134
147	4	EA	139-05620-0000	RESISTOR 562 OHM 1% 100PPM 1/8W 1206	R19 R23 R239 R244
148	2	EA	139-06191-0000	RESISTOR 6.19K OHM 1% 100PPM 1/8W 1206	R114 R117
149	2	EA	139-06190-0000	RESISTOR 619 OHM 1% 100PPM 1/8W 1206	R810 R25
150	4	EA	139-00681-0000	RESISTOR 68.1 OHM 1% 100PPM 1/8W 1206	R215 R817 R511 R214
151	5	EA	139-06812-0000	RESISTOR 68.1K OHM 1% 100PPM 1/8W 1206	R665 R656 R638 R316 R667
152	1	EA	139-00698-0000	RESISTOR 69.8X OHM 1% 100PPM 1/8W 1206	R929
153	3	EA	139-07501-0000	RESISTOR 7.5K OHM 1% 100PPM 1/8W 1206	R104 R120 R245
154	2	EA	139-07150-0000	RESISTOR 715 OHM 1% 100PPM 1/8W 1206	R530 R534
155	6	EA	139-07500-0000	RESISTOR 750 OHM 1% 100PPM 1/8W 1206	R609 R106 R658 R126 R641 R923

Item	Qty	UM	Part #	Title	Reference
156	1	EA	139-08250-0000	RESISTOR 825 OHM 1% 100PPM 1/8W 1206	R806
157	1	EA	139-09092-0000	RESISTOR 90.9K OHM 1% 100PPM 1/8W 1206	R219
158	2	EA	139-09090-0000	RESISTOR 909 OHM 1% 100PPM 1/8W 1206	R115 R319
159	6	EA	139-00000-0004	RESISTOR ZERO OHM JUMPER 1206	R906 R911 R937 R925 R262 R37
160	1	EA	139-240530	OSCILLATOR, 12.8 MHz VCTCXO	Y101
161	1	EA	118-216893-01	INDUCTOR 10T TOROID BALUN	TR600
162	8	EA	106-015986-01	XSTR BSS123 MOSFET SMD	Q630 Q230 Q232 Q602 Q811 Q813 Q607 Q603
163	1	EA	007-00815-0000	XSTR FET MMBFU310	Q616
164	12	EA	106-016393-01	XSTR MMBR951L PNP RF SMD	Q506 Q810 Q808 Q807 Q803 Q802 Q801 Q507 Q302 Q227 Q2 Q508
165	3	EA	007-00383-0004	TRANSISTOR MMBT2222AL NPN	Q223 Q103 Q11
166	2	EA	007-00261-0003	XSTR 2N2907A PNP 60V	Q10 Q222
167	39	EA	106-014270-01	XSTR MMBT3904 NPN SMD	Q206 Q204 Q202 Q118 Q115 Q110 Q109 Q107 Q106 Q105 Q104 Q102 Q215 Q6 Q626 Q8 Q7 Q631 Q816 Q906 Q907 Q908 Q911 Q218 Q815 Q628 Q625 Q613 Q612 Q608 Q408 Q406 Q405 Q404 Q305 Q231 Q224 Q219 Q410
168	9	EA	007-00065-0001	XSTR MMBT3906 PNP 40V	Q5 Q203 Q201 Q205 Q217 Q225 Q306 Q617 Q9
169	33	EA	106-016564-01	XSTR MMBT6427L NPN SMD	Q503 Q817 Q214 Q226 Q3 Q301 Q303 Q601 Q611 Q620 Q213 Q901 Q502 Q814 Q812 Q806 Q805 Q304 Q804 Q627 Q629 Q902 Q905 Q14 Q116 Q111 Q108 Q101 Q904 Q1 Q903 Q610 Q211
170	9	EA	007-00542-0000	XSTR DARL PNP MMBTA64L	Q12 Q221 Q228 Q117 Q809 Q621 Q309 Q619 Q909
171	2	EA	106-015980-01	XSTR MRF5711 NPN RF SMD	Q702 Q701
172	2	EA	106-015979-01	XSTR MRF-5812 NPN RF SMD	Q233 Q212
173	3	EA	106-015981-01	XSTR MRF-9511L NPN RF SMD	Q504 Q505 Q703
174	2	EA	106-016449-01	XSTR PZTA14 NPN DARL SMD	Q501 Q705
175	1	EA	118-717473-01	TRANSMISSION LINE COAXIAL	TL203
176	1	EA	118-717471-01	TRANSMISSION LINE COAXIAL	TL202
177	1	EA	118-717471-02	TRANSMISSION LINE COAXIAL	TL205
178	1	EA	118-717473-02	TRANSMISSION LINE COAXIAL	TL204
179	6	EA	112-0003-000	BEAD, FERRITE ROUND	FB804 FB504 FB807 FB505 FB801 FB806
180	1	EA	108-615471-01	PWB RT-5000 SYNTHESIZER	
181	AR	AR	16005-1	WHITE SILICONE GLUE & SEAL (RTV-162)	
182	1	EA	300-317306-01	SHIELD FENCE ASSY LEFT RT-5000	

Item	Qty	UM	Part #	Title	Reference
183	1	EA	300-317307-01	SHIELD FENCE RT-5000 SYN	
185	2	EA	300-317307-03	SHIELD FENCE RT-5000 SYN	
186	1	EA	300-316782-01	SHIELD FENCE ASSY RT-5000	
187	2	EA	106-04104-0047	CAPACITOR 0.1uF 50V CHIP 1206	C250 C34
188	1	EA	106-04759-0011	CAPACITOR 7.50pF +-.25pF 50V NPO 1206	C833
189	1	EA	118-216601-01	XFMR COAXIAL BALUN	TL801
190	1	EA	118-717473-05	TRANSMISSION LINE COAXIAL	TL803
191	1	EA	118-717473-06	TRANSMISSION LINE COAXIAL	TL802
192	1	EA	106-717446-01	I.C., 74HC14 HEX SCHMITT-TRIGGER INVERTER	U902
194	2	EA	210-015976-226	CAPACITOR CHIP 22uF 20V TANT	C950 C271
199	1	EA	234-040024-68R1	RESISTOR 68.1 OHM 1% 100PPM 1/16W TKF 0603	R422
200	1	EA	234-040024-9090	RESISTOR 909 OHM 1% 100PPM 1/16W TKF 0603	R416
201	2	EA	234-040024-37R4	RESISTOR 37.4 OHM 1% 100PPM 1/16W TKF 0603	R417 R420
202	1	EA	234-040024-3013	RESISTOR 301K OHM 1% 100PPM 1/16W TKF 0603	R415
203	1	EA	234-040024-3010	RESISTOR 301 OHM 1% 100PPM 1/16W TKF 0603	R428
204	10	EA	234-040024-1002	RESISTOR 10.0K OHM 1% 100PPM 1/16W 0603	R401 R403 R411 R412 R413 R418 R421 R425 R426 R268
205	1	EA	234-040024-1001	RESISTOR 1.0K OHM 1% 100PPM 1/16W TKF 0603	R419
206	1	EA	210-014333-224	CAPACITOR .22uF 50V CHIP X7R 10%	C423
207	2	EA	210-040021-104	CAPACITOR .1uF 10% 50V X7R 0805	C432 C433
208	22	EA	210-040021-102	CAPACITOR 1000pF 10% 50V X7R 0805	C401 C402 C403 C404 C408 C409 C410 C411 C412 C413 C414 C415 C416 C420 C421 C422 C425 C426 C427 C428 C429 C430
209	1	EA	210-040018-510	CAPACITOR 51pF 5% 50V COG 0603	C405
210	2	EA	210-040018-331	CAPACITOR 330pF 5% 50V COG 0603	C406 C407
211	4	EA	106-014814-01	XSTR, SMD PNP	Q401 Q402 Q409 Q411
212	1	EA	096-01186-0080	CAPACITOR 1.0uF 35V 20% CHIP TANT	C434
213	1	EA	106-716621-03	IC LM317MDT ADJ VOLT REGULATOR SMD	U406
214	1	EA	118-115978-1R0	INDUCTOR 1.0uH CHIP	L402
215	1	EA	118-115978-121	INDUCTOR 1.2uH CHIP	L610
216	1	EA	234-040024-1003	RESISTOR 100K OHM 1% 100PPM 1/16W TKF 0603	R207
217	1	EA	234-040024-1004	RESISTOR 1.00M OHM 1% 100PPM 1/16W TKF 0603	R263
218	2	EA	234-040024-2211	RESISTOR 2.21K OHM 1% 100PPM 1/16W TKF 0603	R274 R275
219	2	EA	234-040024-47R5	RESISTOR 47.5 OHM 1% 100PPM 1/16W TKF 0603	R838 R839
220	1	EA	234-040024-0000	RESISTOR 0.0 OHM JUMPER 0603	R937

DWG NO.	SH.	REV.
300-140913	1	A

REVISIONS

REV	DESCRIPTION	DATE	APPROVED	APPROVED
A	INITIAL RELEASE PER DCN W1348	8/28/01	S. Elliott	V. Wallace

NOTES:

1. SEE SHEET 2

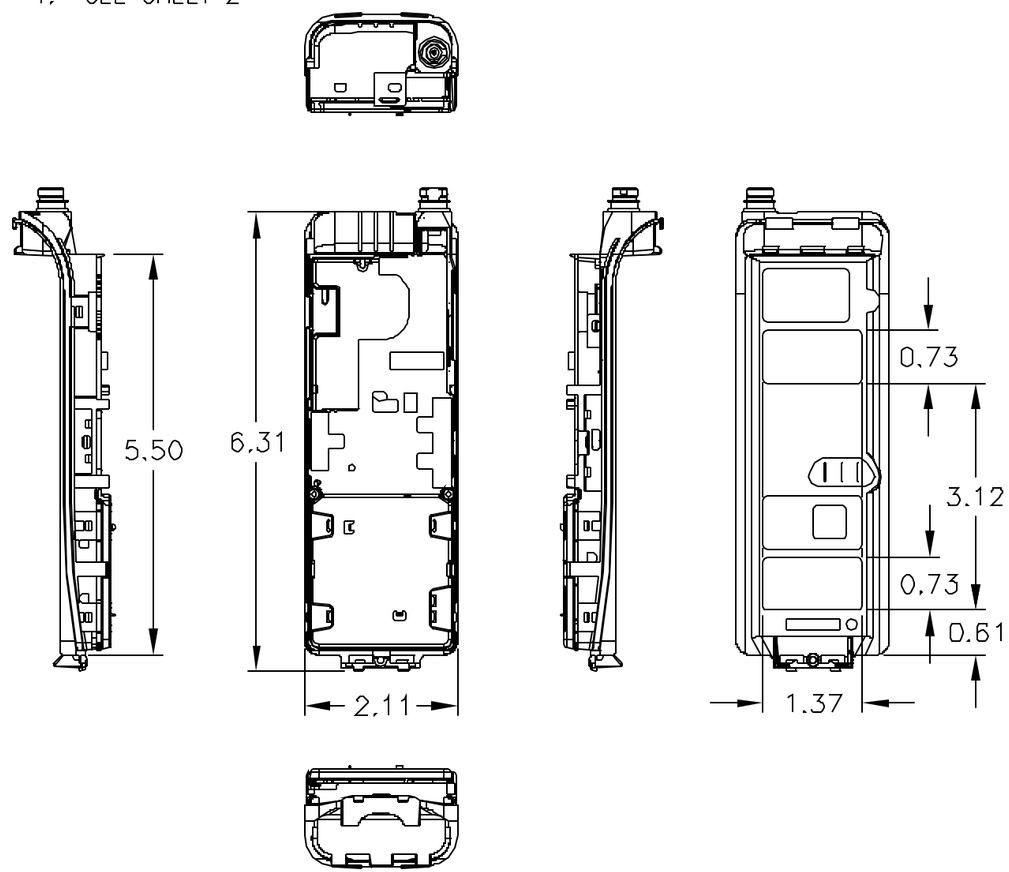

THIS DOCUMENT CONTAINS PROPRIETARY INFORMATION OF WULFSBERG ELECTRONICS DIV. NEITHER RECEIPT NOR POSSESSION THEREOF CONFERS ANY RIGHT TO REPRODUCE, OR USE, OR DISCLOSE, IN WHOLE OR IN PART, ANY SUCH INFORMATION WITHOUT WRITTEN AUTHORIZATION FROM WULFSBERG ELECTRONICS DIVISION.

NEXT ASSY	USED ON
300-041073	400-015525

APPLICATION

THIRD ANGLE PROJECTION

TOLERANCES:
ALL DIMENSIONS ARE IN INCHES UNLESS OTHERWISE SPECIFIED.

FRACTIONS ±X | DECIMALS .XX= .XXX= | ANGLES ±

MATERIAL

FINISH

DO NOT SCALE DRAWING

CONTRACT NO.

APPROVALS	DATE
DRAWN JAY DIAL	07/20/01
ENGINEER S. Elliott	8/28/01
ISSUED V. Wallace	8/28/01

WULFSBERG ELECTRONICS DIVISION
A Chelton Group Company
PRESCOTT, AZ 86301 U.S.A.

MOTOROLA XTS-3000 TANAPA MODULE

SIZE	CAGE CODE	DWG NO.	REV
A	1B7G3	300-140913	A

SCALE = 1/2 : 1 | SHEET = 1 OF 2

DWG NO.	SH.	REV.
300-140913	2	A

DASH NO.	DESCRIPTION	ENCRYPTED	TRUNKING
-01	VHF138 MHz	NO	YES
-02	VHF138 MHz W/D.E.S.	YES	YES
-03	UHF403 MHz	NO	YES
-04	UHF403 MHz W/D.E.S.	YES	YES
-05	UHF520 MHz	NO	YES
-06	UHF520 MHz W/D.E.S.	YES	YES
-07	UHF800 MHz	NO	YES
-08	UHF800 MHz W/D.E.S.	YES	YES

NOTES:

1. DIMENSIONS SHOWN FOR REFERENCE ONLY.
2. REFER TO WEEDS DATABASE FOR CURRENT MOTOROLA PART NUMBERING INFORMATION.
3. VERIFY LABEL ON TANAPA PACKAGE CONTAINS AT LEAST THE OPTIONS LISTED IN WEEDS DATABASE.
4. TEST PER INCOMING ACCEPTANCE TEST PROCEEDURE 150-341090.

WULFSBERG ELECTRONICS DIVISION
A Chelton Group Company
PRESCOTT, AZ 86301 U.S.A.

SIZE	CAGE CODE	DWG NO.	REV
A	1B7G3	300-140913	A

PROPRIETARY NOTICE ON TITLE PAGE APPLIES.

SCALE = 1/2 : 1 | SHEET = 2 OF 2

DOC NO.	REV
310-041073-02	A

REVISIONS

Rev	DCN	Requested by	Cognizant Engineer Last Rev Signed on Master	Doc. Control Approval Last Rev Signed on Master	Release Date Completed on Master
A	W1348	Elliott, Stephen		Vern Wallace	

Note:
This may be a partial list. Refer to DOCIDX for those DCN's which have changed the associated part data in the WEEDS database but not affected this document.

THIS DOCUMENT CONTAINS PROPRIETARY INFORMATION OF WULFSBERG ELECTRONICS DIVISION, A CHELTON GROUP COMPANY. NEITHER RECEIPT NOR POSSESSION THEREOF CONFERS ANY RIGHT TO REPRODUCE, OR USE, OR DISCLOSE, IN WHOLE OR IN PART, ANY SUCH INFORMATION WITHOUT WRITTEN AUTHORIZATION FROM WULFSBERG ELECTRONICS DIVISION.

DRAWING TITLE
PARTS LIST, MOTOROLA TANAPA MODULE, 138 MHz W/DES, W/MODIFIED CASTING, MTM, RT-5000

Wulfsberg Electronics Division
A Chelton Group Company
Prescott, AZ 86301 U.S.A.

SIZE	CAGE CODE	DWG. NO	REV
A	1B7G3	310-041073-02	A
			SCALE

PARTS LIST NOTES

Item	Qty	UM	Part #	Title	Reference
0	RF	RF	300-041073	MOTOROLA TANAPA MODULE WITH MODIFIED CASTING, MTM, RT-5000	
1	1	EA	300-340944-01	TANAPA CASTING ASSEMBLY, MODIFIED, MTM, RT-5000, W/HARDWARE	
2	1	EA	300-140913-02	ASSY, MOTOROLA XTS TANAPA MOD, 138 MHZ W/DES	
3	1	EA	300-040955-01	CABLE ASSEMBLY, TANAPA POWER, MTM, RT-5000	
4	1	EA	156-041104-01	LABEL, TANAPA, RT-5000	

DOC NO.	REV
310-041073-08	A

REVISIONS

Rev	DCN	Requested by	Cognizant Engineer Last Rev Signed on Master	Doc. Control Approval Last Rev Signed on Master	Release Date Completed on Master
A	W1348	Elliott, Stephen		Vern Wallace	

Note:
This may be a partial list. Refer to DOCIDX for those DCN's which have changed the associated part data in the WEEDS database but not affected this document.

THIS DOCUMENT CONTAINS PROPRIETARY INFORMATION OF WULFSBERG ELECTRONICS DIVISION, A CHELTON GROUP COMPANY. NEITHER RECEIPT NOR POSSESSION THEREOF CONFERS ANY RIGHT TO REPRODUCE, OR USE, OR DISCLOSE, IN WHOLE OR IN PART, ANY SUCH INFORMATION WITHOUT WRITTEN AUTHORIZATION FROM WULFSBERG ELECTRONICS DIVISION.

DRAWING TITLE
PARTS LIST, MOTOROLA TANAPA MODULE, 800 MHz W/DES, W/MODIFIED CASTING, MTM, RT-5000

Wulfsberg Electronics Division
A Chelton Group Company
Prescott, AZ 86301 U.S.A.

SIZE	CAGE CODE	DWG. NO	REV
A	1B7G3	310-041073-08	A
			SCALE

PARTS LIST NOTES

Item	Qty	UM	Part #	Title	Reference
0	RF	RF	300-041073	MOTOROLA TANAPA MODULE WITH MODIFIED CASTING, MTM, RT-5000	
1	1	EA	300-340944-01	TANAPA CASTING ASSEMBLY, MODIFIED, MTM, RT-5000, W/HARDWARE	
2	1	EA	300-140913-08	ASSY, MOTOROLA XTS TANAPA MOD, 800 MHZ W/DES & W/TRUNKING	
3	1	EA	300-040955-01	CABLE ASSEMBLY, TANAPA POWER, MTM, RT-5000	
4	1	EA	156-041104-01	LABEL, TANAPA, RT-5000	

DOC NO.	REV
310-018240-01	AH

REVISIONS

Rev	DCN	Requested by	Cognizant Engineer Last Rev Signed on Master	Doc. Control Approval Last Rev Signed on Master	Release Date Completed on Master
AB	W742	Diana Woodhurst	R. Delong	Vern Wallace	9/9/99
AC	W1029	Diana Woodhurst	Steve Wagner	Vern Wallace	5/2/00
AD	W1225	Mike May		Vern Wallace	10/2/00
AE	W1308	Ken Marshall	Steve Wagner	Vern Wallace	12/7/00
AF	W1426	Ken Marshall	Steve Elliott	Vern Wallace	2/28/01
AG	W1437	Bruce Altmeyer	Bruce Altmeyer	Vern Wallace	3/1/01
AH	W1440	Bruce Altmeyer	Bruce Altmeyer	Vern Wallace	

Note:
This may be a partial list. Refer to DOCIDX for those DCN's which have changed the associated part data in the WEEDS database but not affected this document.

DRAWING TITLE

PARTS LIST, RT-5000 POWER AMP TX HEATSINK

THIS DOCUMENT CONTAINS PROPRIETARY INFORMATION OF WULFSBERG ELECTRONICS DIVISION, A CHELTON GROUP COMPANY. NEITHER RECEIPT NOR POSSESSION THEREOF CONFERS ANY RIGHT TO REPRODUCE, OR USE, OR DISCLOSE, IN WHOLE OR IN PART, ANY SUCH INFORMATION WITHOUT WRITTEN AUTHORIZATION FROM WULFSBERG ELECTRONICS DIVISION.

Wulfsberg Electronics Division
A Chelton Group Company
Prescott, AZ 86301 U.S.A.

SIZE	CAGE CODE	DWG. NO	REV
A	1B7G3	310-018240-01	AH
			SCALE

PARTS LIST NOTES

Item	Qty	UM	Part #	Title	Reference
0	RF	RF	300-017526	ASSY DWG RT-5000 PA FILTER BD	
0	RF	RF	152-018240	SCHEMATIC RT-5000 POWER AMP BRD	
0	RF	RF	300-018240-01	ASSY RT-5000 PWR AMPLIFIER	
2	1	EA	108-618240-01	PWB RT-5000 TRANSMITTER	
3	2	EA	210-1189-650	CAPACITOR PORCELAIN 1.8pF+/-.25 500V	C53 C71
4	14	EA	112-014328-01	BEAD, FERRITE, SMALL SMD	B308 B5 B311 B310 B1 B309 B304 B2 B303 B3 B13 B305 B306 B307
6	1	EA	118-218360-01	COAXIAL LINE 25 OHM	W21
7	29	EA	106-04102-0016	CAPACITOR 1000pF 5% 50V NPO 1206	C103 C109 C101 C129 C144 C206 C213 C216 C125 C68 C9 C85 C82 C8 C77 C76 C74 C69 C73 C32 C60 C41 C40 C38 C37 C36 C33 C130 C16
8	3	EA	139-00100-0000	RESISTOR 10 OHM 1% 100PPM 1/8W 1206	R6 R76 R24
9	2	EA	139-02210-0000	RESISTOR 221 OHM 1% 100PPM 1/8W 1206	R21 R56
10	8	EA	139-05620-0000	RESISTOR 562 OHM 1% 100PPM 1/8W 1206	R335 R334 R333 R332 R331 R62 R63 R336
11	3	EA	106-714804-03	IC TL074CD QUAD OP AMP SMD	U200 U1 U5
12	12	EA	106-04101-0016	CAPACITOR 100pF 5% 50V NPO 1206	C224 C51 C78 C336 C334 C333 C332 C331 C222 C221 C22 C215
14	2	EA	139-01692-0000	RESISTOR 16.9K OHM 1% 100PPM 1/8W 1206	R25 R58
15	4	EA	139-01003-0000	RESISTOR 100K OHM 1% 100PPM 1/8W 1206	R28 R82 R313 R310
16	2	EA	106-714803-02	IC DG201A QUAD ANALOG SW SMD	U3 U2
18	1	EA	106-716325-02	IC PCF8591TD ADC/DAC SMD	U11
19	15	EA	139-01001-0000	RESISTOR 1000 OHM 1% 100PPM 1/8W 1206	R11 R211 R209 R85 R141 R96 R137 R94 R130 R46 R88 R80 R131 R86 R122
20	1	EA	139-04321-0000	RESISTOR 4.32K OHM 1% 100PPM 1/8W 1206	R9
21	1	EA	139-02001-0000	RESISTOR 2K OHM 1% 100PPM 1/8W 1206	R12
23	2	EA	118-116595-02	COIL, AIR, .160 ID 2T 18 AWG	L136 L2

Item	Qty	UM	Part #	Title	Reference
24	5	EA	210-1102-210	CAPACITOR PORCELAIN 1000pF 50V 5%	C134 C25 C49 C7 C131
25	8	EA	139-02430-0040	RESISTOR XXXX OHM 1% 100PPM 1/8W 1206	R113 R30 R200 R33 R112 R36 R57 R204
26	1	EA	106-516396-01	DIODE, BAV70L DUAL SW SMD	CR8
28	4	EA	139-01501-0000	RESISTOR 1.5K OHM 1% 100PPM 1/8W 1206	R95 R92 R53 R19
29	3	EA	106-04100-0016	CAPACITOR 10pF 5% 50V NPO 1206	C218 C217 C84
30	3	EA	019-02723-0024	INDUCTOR 1.0uH 10% 235MA 1210	L20 L18 L6
31	2	EA	139-00150-0000	RESISTOR 15 OHM 1% 100PPM 1/8W 1206	R45 R18
32	2	EA	139-01780-0000	RESISTOR 178 OHM 1% 100PPM 1/8W 1206	R301 R307
33	1	EA	139-08871-0000	RESISTOR 8.87K OHM 1% 100PPM 1/8W 1206	R14
34	39	EA	139-01002-0000	RESISTOR 10K OHM 1% 100PPM 1/8W 1206	R123 R111 R120 R31 R139 R140 R143 R202 R203 R210 R212 R83 R217 R41 R135 R303 R214 R311 R314 R40 R328 R324 R323 R321 R320 R316 R315 R300 R67 R121 R48 R51 R52 R128 R133 R3 R134 R7 R44
35	2	EA	139-04993-0000	RESISTOR 499K OHM 1% 100PPM 1/8W 1206	R27 R87
36	1	EA	139-01403-0000	RESISTOR 140K OHM 1% 100PPM 1/8W 1206	R16
41	2	EA	210-1470-250	CAPACITOR PORCELAIN 47pF 500V	C193 C120
42	2	EA	118-218361-02	XFMR COAXIAL BALUN	T4 T1
43	1	EA	118-218277-04	XFMR LS RN	T5
44	1	EA	118-218277-02	XFMR COAXIAL LS RN	T9
45	1	EA	118-217940-02	XFMR COAXIAL LS LH	T10
46	1	EA	118-217940-04	XFMR COAXIAL LS LH	T6
48	1	EA	106-04510-0016	CAPACITOR 51pF 5% 50V NPO 1206	C23
49	1	EA	139-01620-0040	RESISTOR CH 162 1W 1%	R4
51	5	EA	210-1681-220	CAPACITOR 680pF 50V 5% SMD	C26 C6 C5 C28 C29
53	2	EA	118-116593-09	COIL, AIR, .250 ID 9T 18 AWG	L104 L3
54	4	EA	106-017948-01	XSTR MRF8372	Q9 Q4 Q19 Q17
55	2	EA	139-01301-0000	RESISTOR 1.30K OHM 1% 100PPM 1/8W 1206	R77 R13
56	2	EA	139-02670-0000	RESISTOR 267 OHM 1% 100PPM 1/8W 1206	R35 R66
57	2	EA	019-02723-0015	INDUCTOR .18uH 20% 220MA 1210	L19 L8
58	15	EA	106-04471-0016	CAPACITOR 470pF 5% 50V NPO 1206	C123 C119 C11 C118 C127 C128 C133 C137 C158 C159 C160 C161 C75 C99 C115
59	4	EA	106-518382-01	DIODE, HSMP-3802 DUAL SERIES PAIR	CR1 CR4 CR5 CR6
60	1	EA	019-02723-0035	INDUCTOR 8.2uH 10% 120MA 1210	L21
61	3	EA	139-01000-0000	RESISTOR 100 OHM 1% 100PPM 1/8W 1206	R38 R23 R37

Item	Qty	UM	Part #	Title	Reference
62	15	EA	007-00065-0001	XSTR MMBT3906 PNP 40V	Q106 Q121 Q200 Q203 Q206 Q115 Q316 Q205 Q117 Q107 Q108 Q109 Q110 Q111 Q120
63	25	EA	106-014270-01	XSTR MMBT3904 NPN SMD	Q11 Q202 Q100 Q101 Q102 Q103 Q104 Q105 Q204 Q310 Q304 Q302 Q16 Q207 Q113 Q201 Q116 Q209 Q114 Q15 Q118 Q119 Q12 Q13 Q14
64	5	EA	139-02552-0000	RESISTOR 25.5K OHM 1% 100PPM 1/8W 1206	R26 R68 R59 R319 R318
65	3	EA	139-03011-0000	RESISTOR 3.01K OHM 1% 100PPM 1/8W 1206	R65 R61 R47
67	2	EA	106-04829-0011	CAPACITOR 8.2pF +-.25pF 50V NPO 1206	C200 C21
68	3	EA	210-1829-650	CAPACITOR PORCELAIN 8.2pF+/-.25 500V	C35 C143 C111
69	4	EA	210-1569-650	CAPACITOR PORCELAIN 5.6pF+/-.25	C15 C210 C1 C66
70	2	EA	118-116596-01	COIL, AIR, .135 ID 1T 18 AWG	L109 L123
71	2	EA	118-116595-01	COIL, AIR, .160 ID 1T 18 AWG	L5 L130
72	2	EA	210-1100-250	CAPACITOR PORCELAIN 10pF 500V 5%	C48 C140
74	3	EA	096-01186-0085	CAPACITOR 6.8uF 35V 20% CHIP TANT	C2 C39 C57
76	2	EA	106-04221-0016	CAPACITOR 220pF 5% 50V NPO 1206	C44 C107
77	6	EA	118-118066-6R8	CHOKE 6.8 uH SMD	L137 L129 L128 L110 L100 L145
80	5	EA	210-1120-250	CAPACITOR PORCELAIN 12pF 500V 5	C30 C147 C126 C116 C112
81	3	EA	201-016418-03	CAPACITOR ADJ 3-10pF SMD	C45 C18 C10
82	1	EA	106-04331-0016	CAPACITOR 330pF 5% 50V NPO 1206	C83
83	59	EA	106-04224-0047	CAPACITOR .22uF 10% 50V X7R 1206	C325 C337 C354 C348 C347 C346 C338 C335 C330 C329 C355 C326 C72 C327 C356 C357 C4 C324 C61 C316 C87 C89 C91 C92 C94 C96 C97 C98 C47 C305 C104 C113 C114 C136 C138 C139 C142 C145 C223 C24 C3 C300 C318 C303 C323 C307 C308 C309 C31 C310 C311 C314 C54 C317 C320 C321 C322 C302 C43
85	2	EA	210-1471-230	CAPACITOR PORCELAIN 470pF 200V	C56 C46
87	1	EA	210-1680-250	CAPACITOR PORCELAIN 68pF 500V 5%	C121
88	1	EA	139-05621-0000	RESISTOR 5.62K OHM 1% 100PPM 1/8W 1206	R116
91	4	EA	118-218205-02	XFMR COAXIAL HS LH	T8 T7 T2 T12
93	1	EA	118-218361-01	XFMR COAXIAL BALUN	T3

Item	Qty	UM	Part #	Title	Reference
94	1	EA	007-06424-0001	LED, RED SMD	CR2
95	9	EA	233-018201-502	TRIMPOT 5K SMT	R72 R69 R1 R5 R71 R73 R74 R90 R70
97	2	EA	118-116596-08	COIL, AIR, .135 ID 8T 18 AWG	L14 L118
99	1	EA	106-718212-02	IC LT1256CS VIDEO FADER 40MHz	U6
100	1	EA	139-02551-0000	RESISTOR 2.55K OHM 1% 100PPM 1/8W 1206	R84
101	3	EA	106-514278-01	DIODE, BAV99 DUAL SERIES SW	CR9 CR3 CR200
103	14	EA	139-06190-0030	RESISTOR CHIP 620 OHM 1/2W 5%	R105 R103 R216 R215 R102 R205 R108 R201 R104 R110 R118 R101 R109 R100
104	2	EA	118-116595-07	COIL, AIR, .160 ID 7T 18 AWG	L101 L113
105	2	EA	118-116594-08	COIL, AIR, .185 ID 8T 18 AWG	L112 L108
106	2	EA	118-116594-09	COIL, AIR, .185 ID 9T 18 AWG	L106 L105
107	2	EA	210-1390-250	CAPACITOR PORCELAIN 39pF 500V	C141 C14
108	1	EA	210-1820-250	CAPACITOR PORCELAIN 82pF 500V	C100
109	2	EA	118-116595-05	COIL, AIR, .160 ID 5T 18 AWG	L111 L140
110	1	EA	118-116595-10	COIL, AIR, .160 ID 10T 18 AWG	L117
111	7	EA	118-116596-02	COIL, AIR, .135 ID 2T 18 AWG	L115 L4 L204 L203 L134 L125 L131
112	7	EA	210-1220-250	CAPACITOR PORCELAIN 22pF 500V 5%	C108 C122 C148 C207 C50 C88 C63
113	4	EA	210-1180-250	CAPACITOR PORCELAIN 18pF 500V 5%	C110 C146 C149 C124
114	1	EA	210-1330-250	CAPACITOR PORCELAIN 33pF 500V 5%	C102
115	1	EA	118-116594-07	COIL, AIR, .185 ID 7T 18 AWG	L116
116	2	EA	210-1479-650	CAPACITOR PORCELAIN 4.7pF+/-.25 500V	C135 C132
117	2	EA	139-00499-0000	RESISTOR 49.9 OHM 1% 100PPM 1/8W 1206	R114 R206
118	3	EA	106-515788-01	DIODE, HSMS-2800 SHOTTKY SMD	CR207 CR100 CR115
119	8	EA	139-03651-0000	RESISTOR 3.65K OHM 1% 100PPM 1/8W 1206	R142 R208 R136 R132 R129 R107 R213 R138
120	1	EA	118-116595-04	COIL, AIR, .160 ID 4T 18 AWG	L141
121	1	EA	118-116596-04	COIL, AIR, .135 ID 4T 18 AWG	L139
122	1	EA	131-017953-01	RELAY 12V DPDT SMT	K200
123	24	EA	106-618031-01	DIODE, PIN MA4P7001F 50V SMD	CR112 CR113 CR206 CR205 CR203 CR202 CR121 CR120 CR119 CR118 CR117 CR116 CR110 CR114 CR111 CR109 CR108 CR107 CR106 CR105 CR104 CR103 CR102 CR101
124	4	EA	118-118066-R27	INDUCTOR FIXED .27uH SMD	L200 L127 L208 L207

Item	Qty	UM	Part #	Title	Reference
126	2	EA	118-116593-08	COIL, AIR, .250 ID 8T 18 AWG	L102 L103
127	2	EA	118-116595-06	COIL, AIR, .160 ID 6T 18 AWG	L107 L144
128	1	EA	118-116595-09	COIL, AIR, .160 ID 9T 18 AWG	L114
129	1	EA	139-00475-0000	RESISTOR 47.5 OHM 1% 100PPM 1/8W 1206	R115
130	3	EA	118-116596-03	COIL, AIR, .135 ID 3T 18 AWG	L133 L121 L7
131	2	EA	118-116594-02	COIL, AIR, .185 ID 2T 18 AWG	L120 L135
132	5	EA	118-116595-03	COIL, AIR, .160 ID 3T 18 AWG	L124 L119 L126 L132 L122
134	2	EA	118-116594-01	COIL, AIR, .185 ID 1T 18 AWG	L201 L206
135	3	EA	210-1689-650	CAPACITOR PORCELAIN 6.8pF+/-.25 500V	C17 C203 C212
136	1	EA	106-04399-0011	CAPACITOR 3.9pF +-.25pF 50V NPO 1206	C208
137	3	EA	210-1339-650	CAPACITOR PORCELAIN 3.3pF+/-.25 500V	C214 C204 C202
138	2	EA	118-116597-01	COIL, AIR, .110 ID 1T 18 AWG	L202 L205
140	4	EA	106-616269-01	DIODE, PIN HSMP-3800-L30 SMD	CR201 CR204 CR208 CR209
141	1	EA	019-02723-0006	INDUCTOR 33nH 20% 390MA 1210	L209
142	1	EA	106-04059-0011	CAPACITOR 0.5pF +-.25pF 50V NPO 1206	C219
143	1	EA	106-04129-0011	CAPACITOR 1.2pF +-.5pF 50V NPO 1206	C209
145	1	EA	120-03026-0080	IC 78M05 DPAK VOLT REG. SMD	VR303
147	2	EA	139-01691-0000	RESISTOR 1.69K OHM 1% 100PPM 1/8W 1206	R302 R308
148	4	EA	106-016564-01	XSTR MMBT6427L NPN SMD	Q305 Q303 Q306 Q307
150	2	EA	139-05622-0000	RESISTOR 56.2K OHM 1% 100PPM 1/8W 1206	R312 R60
151	1	EA	106-714779-02	IC 74HC138AD 3-8 LINEDECD	U303
152	1	EA	106-716271-02	IC PCF8574TD 8 BIT SMD	U302
154	1	EA	106-716705-02	IC AT24C02N 256X8 EEPRM SMD	U305
156	1	EA	139-00562-0000	RESISTOR 56.2 OHM 1% 100PPM 1/8W 1206	R117
157	1	EA	139-02943-0000	RESISTOR 294K OHM 1% 100PPM 1/8W 1206	R305
160	3	EA	106-515984-01	DIODE, BAW56L SWITCHING SMD	CR307 CR300 CR7
161	2	EA	139-02211-0000	RESISTOR 2.21K OHM 1% 100PPM 1/8W 1206	R326 R325
162	4	EA	120-03126-0005	IC LM317LM ADJ VOLT REG 100MA	VR302 VR300 VR304 VR306
164	2	EA	120-03648-0001	IC LM337LM 3 TERMINAL NEG ADJ	VR301 VR305
165	1	EA	139-04320-0000	RESISTOR 432 OHM 1% 100PPM 1/8W 1206	R79
166	1	EA	129-016499-01	CONNECTOR TNC FEMALE PANEL MT	J102
167	1	EA	129-016517-01	CONNECTOR TNC FEMALE PANEL MT	J203
168	1	EA	310-017526-01	PARTS LIST, P.A. FILTER ASSY (RT-5000)	J2
169	4	EA	139-01500-0000	RESISTOR 150 OHM 1% 100PPM 1/8W 1206	R2 R20 R8 R99
170	3	EA	139-05111-0000	RESISTOR 5.11K OHM 1% 100PPM 1/8W 1206	R81 R15 R64
171	1	EA	131-00221-0023	RESISTOR CF 220 1/4W 5%	R500
172	1	EA	139-20750-0000	RESISTOR CHIP 7.50 OHM 1/8W 1%	R17
173	2	EA	139-06811-0000	RESISTOR 6.81K OHM 1% 100PPM 1/8W 1206	R22 R91
175	2	EA	139-03161-0000	RESISTOR 3.16K OHM 1% 100PPM 1/8W 1206	R54 R50
176	1	EA	139-02000-0000	RESISTOR 200 OHM 1% 100PPM 1/8W 1206	R93

Item	Qty	UM	Part #	Title	Reference
179	8	EA	106-04104-0047	CAPACITOR 0.1uF 50V CHIP 1206	C1000 C1001 C13 C34 C93 C340 C27 C12
181	6	EA	139-20340-0000	RESISTOR CHIP 3.40 OHM 1/8W1%	R49 R329 R309 R306 R10 R304
182	4	EA	210-1181-220	CAPACITOR 180pF 100V 5% SMD	C52 C42 C81 C90
183	1	EA	019-02723-0027	INDUCTOR 1.8uH 10% 190MA 1210	L24
184	6	EA	096-01186-0019	CAPACITOR 22uF 20V 10% CHIP TANT	C55 C342 C341 C343 C304 C339
185	2	EA	139-00000-0004	RESISTOR ZERO OHM JUMPER 1206	R337 R32
186	1	EA	210-1159-650	CAPACITOR PORCELAIN 1.5pF+/-.25 500V	C79
188	1	EA	139-02002-0000	RESISTOR 20.0K OHM 1% 100PPM 1/8W 1206	R42
190	1	EA	139-01622-0000	RESISTOR 16.2K OHM 1% 100PPM 1/8W 1206	R75
191	1	EA	139-00221-0040	RESISTOR CHIP 22.1 OHM 1W 1%	R55
192	2	EA	210-1150-250	CAPACITOR PORCELAIN 15pF 200V 5%	C105 C106
193	1	EA	210-1270-250	CAPACITOR PORCELAIN 27pF 500V 5%	C117
194	2	EA	118-116594-05	COIL, AIR, .185 ID 5T 18 AWG	L138 L142
195	1	EA	118-116593-01	COIL, AIR, .250 ID 1T 18 AWG	L143
196	2	EA	210-1399-650	CAPACITOR PORCELAIN 3.9pF+/-.25 500V	C201 C205
197	2	EA	210-0629-650	CAPACITOR CHIP 6.2 pF .25 500V	C59 C211
199	1	EA	106-815662-01	IC PROGRAMMED GAL22V10	U300
200	1	EA	139-03321-0000	RESISTOR 3.32K OHM 1% 100PPM 1/8W 1206	R327
201	5	EA	195-018352-335	CAPACITOR CHIP 20V TANT SMD	C301 C315 C312 C313 C306
202	1	EA	096-01186-0080	CAPACITOR 1.0uF 35V 20% CHIP TANT	C328
203	1	EA	118-218427-01	TRANSFORMER, COAXIAL BALUN RT-5000 PA	W22
204	6	EA	007-06424-0006	LED SURFACE MOUNT	CR302 CR306 CR305 CR304 CR303 CR301
205	2	EA	019-02723-0009	INDUCTOR 56nH 20% 340MA 1210	L1 L15
206	1	EA	310-018396-01	PARTS LIST, CABLE ASSY, COAX RT-5000 (12.50"L)	P9
207	1	EA	123-118396-02	CABLE ASSY COAX RT-5000 (LO IN)	P11
208	1	EA	123-118396-03	CABLE ASSY COAX RT-5000 (TX)	P15
209	1	EA	300-316343-01	RT-5000 BRACKET ANTENNA CONN	
210	1	EA	146-018397-01	BLOCK CONNECTOR RT-5000 PA	
211	AR	AR	16012-7	LOCTITE 222 PURPLE	
212	2	EA	146-018378-01	GROUND STRAP	
213	1	EA	300-318330-01	FENCE SHEILD PA LEFT	
214	1	EA	300-318331-01	FENCE SHEILD PA RIGHT	
215	4	EA	MS35338-135	WASHER, SPLITLOCK #4	
216	7	EA	MS51957-14	SCREW, 4-40 X 5/16 PHP	
217	2	EA	NAS620-C4L	WASHER, FLAT #4	
218	2	EA	089-02744-0024	NUT, FLAT 4-40	
219	4	EA	MS51957-4	SCREW, 2-56 X 5/16 PHP	
220	4	EA	MS35338-134	WASHER, SPLITLOCK #2	
221	2	EA	NAS620-C2	WASHER, FLAT #2	

Item	Qty	UM	Part #	Title	Reference
222	2	EA	089-02744-0022	NUT, FLAT 2-56	
223	AR	AR	16005-1	WHITE SILICONE GLUE & SEAL (RTV-162)	
224	AR	AR	16017-18	WIRE, BUS 18AWG	
225	3	EA	129-018012-01	COAX CLIP	P11 P15 P9
226	1	EA	106-04339-0011	CAPACITOR 3.3pF +-.25pF 50V NPO 1206	C19
227	1	EA	210-0101-110	CAPACITOR 100pF 10% 50V PRCLN CHIP	C70
228	1	EA	139-04751-0000	RESISTOR 4.75K OHM 1% 100PPM 1/8W 1206	R34
229	1	EA	118-218361-03	XFMR COAXIAL BALUM	T11
232	1	EA	234-018457-01	THERMISTOR 100K OHM +/- 5% NTC SMD	R89
233	1	EA	139-08252-0000	RESISTOR 82.5K OHM 1% 100PPM 1/8W 1206	R29
234	1	EA	106-04689-0011	CAPACITOR 6.8pF +-.25pF 50V NPO 1206	C64
235	AR	AR	600-016240-02	TAPE ELECTRICAL KAPTON .500W	
236	AR	AR	123-018419-01	CABLE COAX 50 OHM	
237	1	EA	234-014279-471	RESISTOR CHIP 470 OHM 1W 5%	R145
238	AR	AR	016-01134-0002	COPPER TAPE .50 IN	
239	2	EA	139-03320-0000	RESISTOR 332 OHM 1% 100PPM 1/8W 1206	R39 R146
240	2	EA	112-0006-000	BEAD, FERRITE 0.12 ID	FB2 FB1
241	1	EA	130-09006-3101	RESISTOR CH 1.0 OHM 5% 1W	R144
242	9	EA	106-015986-01	XSTR BSS123 MOSFET SMD	Q20 Q122 Q301 Q300 Q318 Q317 Q309
243	AR	AR	16012-3	LOCTITE ACCELERATOR & BONDER	
244	AR	AR	16031-1	WIRE, 28AWG WIRE WRAP	
245	1	EA	210-1109-650	CAPACITOR PORCELAIN 1.0pF 500V	C58
246	2	EA	118-115978-1R0	INDUCTOR 1.0uH CHIP	L23 L16
247	1	EA	131-00510-0013	RESISTOR CF 51 1/8W 5%	R207
248	1	EA	118-115978-8R2	INDUCTOR 8.2uH CHIP	L22
249	1	EA	118-115978-R18	INDUCTOR 0.18uH CHIP	L13

DOC NO.	REV
310-040957-01	B

REVISIONS

Rev	DCN	Requested by	Cognizant Engineer Last Rev Signed on Master	Doc. Control Approval Last Rev Signed on Master	Release Date Completed on Master
A	W1418	Davis, Jim		Vern Wallace	6/28/01
B	W1629	Davis, Jim	Steve Elliott	Vern Wallace	

Note:
This may be a partial list. Refer to DOCIDX for those DCN's which have changed the associated part data in the WEEDS database but not affected this document.

DRAWING TITLE
PARTS LIST, UHF BOARD, MTM, RT-5000

THIS DOCUMENT CONTAINS PROPRIETARY INFORMATION OF WULFSBERG ELECTRONICS DIVISION, A CHELTON GROUP COMPANY. NEITHER RECEIPT NOR POSSESSION THEREOF CONFERS ANY RIGHT TO REPRODUCE, OR USE, OR DISCLOSE, IN WHOLE OR IN PART, ANY SUCH INFORMATION WITHOUT WRITTEN AUTHORIZATION FROM WULFSBERG ELECTRONICS DIVISION.

Wulfsberg Electronics Division
A Chelton Group Company
Prescott, AZ 86301 U.S.A.

SIZE	CAGE CODE	DWG. NO	REV
A	1B7G3	310-040957-01	B
			SCALE

PARTS LIST NOTES

Item	Qty	UM	Part #	Title	Reference
0	RF	RF	152-040957	SCHEMATIC, UHF BOARD, MTM, RT-5000	
0	RF	RF	300-040957	ASSEMBLY, UHF BOARD, MTM, RT-5000	
1	1	EA	108-640957-01	PWB, UHF BOARD, MTM, RT-5000	
2	AR	AR	012-01361-0002	TAPE LACING	
3	1	EA	019-02723-0024	INDUCTOR 1.0UH 10% 235MA 1210	L32
4	1	EA	096-01186-0043	CAPACITOR, 1.0UF 50V 20% CHIP TANT	C5
5	3	EA	096-01186-0080	CAPACITOR, 1.0UF 35V 20% CHIP TANT	C17 C4 C64
6	4	EA	106-041006-01	TRANSISTOR BSS138 N-CHANNEL MOSFET	Q1 Q11 Q32 Q9
7	3	EA	106-041007-01	TRANSISTOR BSS84 P-CHANNEL MOSFET	Q30 Q33 Q34
8	6	EA	106-618031-01	DIODE PIN MA4P7001F 50V SMD	CR1 CR2 CR3 CR4 CR5 CR6
9	2	EA	112-014328-01	BEAD, FERRITE, SMALL SMD	B1 B2
10	1	EA	112-040469-220	FERRITE BEAD (0603SMD)	B3
11	7	EA	118-140134-047	INDUCTOR, 47NH AIR COIL 1812 SMD	L2 L22 L3 L33 L4 L5 L6
12	3	EA	118-140134-101	INDUCTOR, 100NH AIR COIL 1812 SMD	L15 L7 L8
13	1	EA	118-140159-03	INDUCTOR, MICRO SPRING 2.55NH SMD	L1
14	1	EA	118-241008-01	RF POWER SPLITTER 5-1000 MHZ	PS1
15	1	EA	129-040907-01	CONNECTOR, MINIATURE COAX SMT RECEPTACLE	A10J32
16	2	EA	129-040958-01	CONNECTOR, COAX SMT MINIATURE	A10P34 A10P38
17	4	EA	129-216457-01	CONNECTOR SMB FEM RT ANGLE PC MT	A10J33 A10J35 A10J36 A10J37
18	1	EA	129-240960-10	CONNECTOR, 2 ROW SMT RECEPTACLE	A10P39
19	4	EA	210-040018-471	CAPACITOR, 470PF 5% 50V COG 0603	C27 C35 C43 C63
20	12	EA	210-040018-680	CAPACITOR, 68PF 5% 50V COG 0603	C1 C10 C11 C13 C14 C15 C16 C18 C30 C33 C61 C69
21	2	EA	210-1159-650	CAPACITOR, PORCELAIN 1.5PF+/-.25 500V	C12 C6
22	1	EA	210-1189-650	CAPACITOR, PORCELAIN 1.8PF+/-.25 500V	C9
23	6	EA	210-1680-250	CAPACITOR, PORCELAIN 68PF 500V 5%	C2 C25 C28 C3 C7 C8
24	4	EA	234-016467-130	RES 130 OHM 1/2W 5% CHIP	R1 R7 R8 R9
25	1	EA	234-040024-1002	RESISTOR 10K OHM 1% 100PPM 1/16W TKF 0603	R2
26	5	EA	234-040024-1003	RESISTOR 100K OHM 1% 100PPM 1/16W TKF 0603	R15 R32 R35 R45 R5
27	1	EA	234-040024-3321	RESISTOR 3.32K OHM 1% 100PPM 1/16W TKF 0603	R56

Item	Qty	UM	Part #	Title	Reference
28	1	EA	234-040024-6491	RESISTOR 6.49K OHM 1% 100PPM 1/16W TKF 0603	R50
29	1	EA	129-340905-10	HOUSING, MINI-LATCH DOUBLE ROW	
30	10	EA	129-140903-02	CRIMP RECEPTACLE CONTACT	
31	AR	AR	16091-3	WIRE, 24 AWG 19STR ORN	
32	AR	AR	16091-9	WIRE, 24 AWG 19STR WHT	
33	AR	AR	16091-2	WIRE, 24 AWG 19STR RED	
34	AR	AR	16091-5	WIRE, 24 AWG 19STR GRN	
35	AR	AR	16091-6	WIRE, 24 AWG 19STR BLU	
36	AR	AR	16091-0	WIRE, 24 AWG 19STR BLK	
37	1	EA	146-041032-01	SHIELD FENCE, .620 X .545	
38	1	IN	16022-6	SLEEVING SHRINK .187	
39	1	EA	129-2122-001	CONNECTOR SINGLE PIN HEADER SINGLE ROW	

DOC NO.	REV
310-040898-01	A

REVISIONS

Rev	DCN	Requested by	Cognizant Engineer Last Rev Signed on Master	Doc. Control Approval Last Rev Signed on Master	Release Date Completed on Master
A	W1301	Jim Davis		Vern Wallace	

Note:
This may be a partial list. Refer to DOCIDX for those DCN's which have changed the associated part data in the WEEDS database but not affected this document.

THIS DOCUMENT CONTAINS PROPRIETARY INFORMATION OF WULFSBERG ELECTRONICS DIVISION, A CHELTON GROUP COMPANY. NEITHER RECEIPT NOR POSSESSION THEREOF CONFERS ANY RIGHT TO REPRODUCE, OR USE, OR DISCLOSE, IN WHOLE OR IN PART, ANY SUCH INFORMATION WITHOUT WRITTEN AUTHORIZATION FROM WULFSBERG ELECTRONICS DIVISION.

DRAWING TITLE

PARTS LIST, VHF BOARD, MTM, RT-5000

Wulfsberg Electronics Division
A Chelton Group Company
Prescott, AZ 86301 U.S.A.

SIZE	CAGE CODE	DWG. NO	REV
A	1B7G3	310-040898-01	A
			SCALE

PARTS LIST NOTES

Item	Qty	UM	Part #	Title	Reference
0	RF	RF	152-040898	SCHEMATIC, VHF BOARD, MTM, RT-5000	
0	RF	RF	300-040898	ASSEMBLY, VHF BOARD, MTM, RT-5000	
1	1	EA	108-640898-01	PWB, VHF BOARD, MTM, RT-5000	
2	2	EA	096-01186-0047	CAP 4.7UF 50V CHIP TANT	C60 C71
3	2	EA	096-01186-0080	CAP 1.0uF 35V 20% CHIP TANT	C1 C20
5	6	EA	106-041006-01	TRANSISTOR BSS138 N-CHANNEL MOSFET	Q1 Q10 Q26 Q5 Q6 Q8
6	5	EA	106-041007-01	TRANSISTOR BSS84 P-CHANNEL MOSFET	Q15 Q16 Q22 Q27 Q28
7	1	EA	106-616444-01	DIODE HSMP3824 RF DUAL PIN	CR10
8	7	EA	106-618031-01	DIODE PIN MA4P7001F 50V SMD	CR1 CR2 CR20 CR21 CR3 CR4 CR7
9	9	EA	118-118066-R27	INDUCTOR .27UH SMD	L10 L11 L12 L13 L14 L17 L18 L8 L9
10	1	EA	118-140032-17R5	INDUCTOR 17.5nH 2.2 GHz 6 TURN (SMD)	L19
11	1	EA	118-140032-35R5	INDUCTOR 35.5nH 1.5 GHz 9 TURN (SMD)	L21
12	2	EA	118-140134-022	INDUCTOR, 22nH AIR COIL 1812 SMD	L20 L29
13	1	EA	118-140134-033	INDUCTOR, 33nH AIR COIL 1812 SMD	L27
14	2	EA	118-140134-047	INDUCTOR, 47nH AIR COIL 1812 SMD	L25 L30
15	1	EA	118-140134-056	INDUCTOR, 56nH AIR COIL 1812 SMD	L28
16	2	EA	118-140134-101	INDUCTOR, 100nH AIR COIL 1812 SMD	L26 L31
17	1	EA	118-241008-01	RF POWER SPLITTER 5-1000 MHZ	PS1
18	1	EA	123-00002-0003	IC MC74HC02D QUAD 2-IN NOR	U2
19	1	EA	129-040907-01	CONN, MINIATURE COAX SMT RECEPTACLE	A9J40
20	2	EA	129-040958-01	CONN INTERCONNECT COAX	A9J34 A9J38
21	1	EA	129-240030-10	CONNECTOR DUAL ROW 10 PIN .025SQ PIN	A9J39
22	1	EA	139-01300-0000	RES 130 OHM 1% 1/8W CHIP	R13
23	1	EA	139-02430-0000	RES 243 OHM 1% 1/8W CHIP	R11
24	18	EA	210-040018-471	CAP 470pF 5% 50V COG 0603	C12 C13 C14 C16 C18 C21 C23 C26 C31 C32 C34 C36 C45 C47 C5 C55 C62 C65
25	1	EA	210-040020-102	CAP 1000pF 5% 50V COG 0805	C58
26	4	EA	210-040020-471	CAP 470pF 5% 50V COG 0805	C19 C2 C22 C48
27	1	EA	210-040021-104	CAP .1uF 10% 50V X7R 0805	C59
28	1	EA	210-1180-250	CAP 18pF 500V 5% SMD	C39
29	1	EA	210-1220-250	CAP 22pF 500V 5% SMD	C24
30	1	EA	210-1279-650	CAP 2.7pF 500V +/-.25pF SMD	C42
31	1	EA	210-1330-250	CAP 33pF 500V 5% SMD	C56

Item	Qty	UM	Part #	Title	Reference
32	4	EA	210-1331-230	CAP 330pF 200V 5% SMD	C49 C51 C53 C54
33	1	EA	210-1390-250	CAP 39pF 500V 5% SMD	C50
34	1	EA	210-1470-250	CAP 47pF 500V 5% SMD	C52
35	3	EA	210-1471-230	CAP 470pF 200V 5% SMD	C29 C57 C9
36	2	EA	210-1560-250	CAP 56pF 500V 5% SMD	C38 C41
37	1	EA	210-1829-650	CAPACITOR PORCELAIN 8.2pF +/-.25pF 500V	C37
38	1	EA	233-040075-502	TRIMPOT 5 TURN 5K SMD	R42
39	1	EA	234-014279-161	RESISTOR CHIP 160 OHM 5% 1W	R40
40	3	EA	234-014279-241	RESISTOR CHIP 240 OHM 5% 1W	R38 R39 R43
41	2	EA	234-014280-5R6	RES 5.6 OHM 5% 1/8W CHIP	R10 R4
42	6	EA	234-016467-130	RES 130 OHM 1/2W 5% CHIP	R27 R28 R29 R30 R57 R58
43	2	EA	234-040024-1002	RESISTOR 10K OHM 1% 100PPM 1/16W TKF 0603	R2 R5
44	8	EA	234-040024-1003	RESISTOR 100K OHM 1% 100PPM 1/16W TKF 0603	R1 R12 R20 R26 R3 R33 R34 R6
45	1	EA	234-040024-1821	RESISTOR 1.82K OHM 1% 100PPM 1/16W TKF 0603	R41
46	2	EA	234-040024-3321	RESISTOR 3.32K OHM 1% 100PPM 1/16W TKF 0603	R24 R49
47	1	EA	234-040024-4120	RESISTOR 412 OHM 1% 100PPM 1/16W TKF 0603	R16
48	2	EA	234-040024-6491	RESISTOR 6.49K OHM 1% 100PPM 1/16W TKF 0603	R23 R48
49	1	EA	234-040024-8250	RESISTOR 825 OHM 1% 100PPM 1/16W TKF 0603	R14
50	1	EA	146-041021-01	SHIELD FENCE, 1.140 X 1.065	
51	1	EA	210-1200-250	CAP 20pF 500V 5% SMD	C40