REVISIONS					
ZONE	REV	DESCRIPTION	DATE	APPROVED	APPROVED
	A	INITIAL RELEASE	3-16-92		S OWINGS
		PRODUCTION RELEASE	3-16-92		
	B	REVISED PER DCN 9044 CHANGE ZONE D-7 & B-5	6-4-96		B DARBE
	3	127795	5-29-97		TAC
	D	REVISED PER DCN W1626			

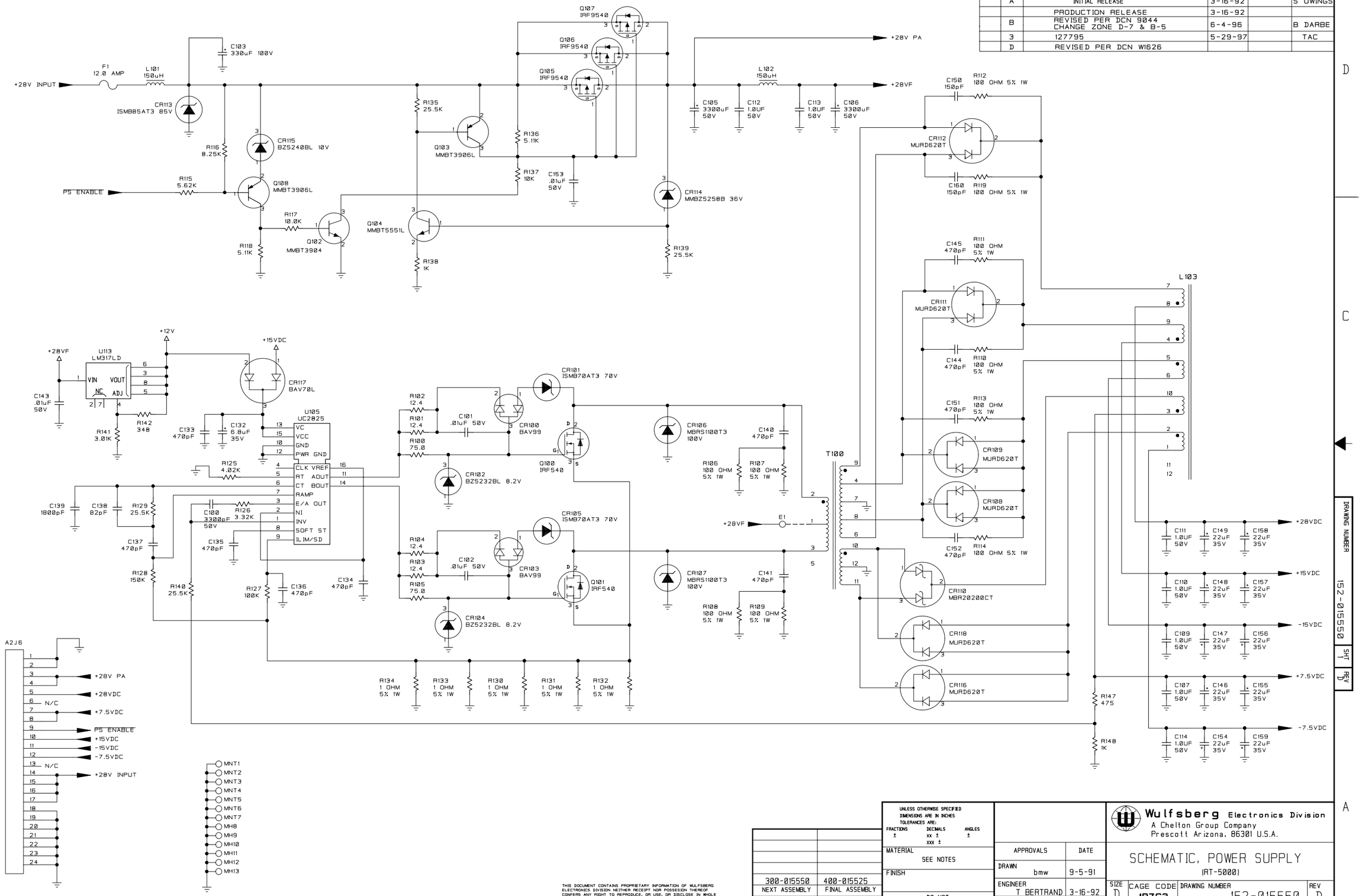

300-015550	400-015525
NEXT ASSEMBLY	FINAL ASSEMBLY
APPLICATION	

UNLESS OTHERWISE SPECIFIED
DIMENSIONS ARE IN INCHES
TOLERANCES ARE:
FRACTIONS ± DECIMALS .XX ± .XXX ± ANGLES ±

MATERIAL SEE NOTES

FINISH

DO NOT SCALE DRAWING

APPROVALS	DATE
DRAWN bmw	9-5-91
ENGINEER T BERTRAND	3-16-92
ISSUED S OWINGS	3-16-92

THIS DOCUMENT CONTAINS PROPRIETARY INFORMATION OF WULFSBERG ELECTRONICS DIVISION NEITHER RECEIPT NOR POSSESION THEREOF CONFERS ANY RIGHT TO REPRODUCE, OR USE, OR DISCLOSE IN WHOLE OR IN PART, ANY SUCH INFORMATION WITHOUT WRITTEN AUTHORIZATION FROM WULFSBERG ELECTRONICS DIVISION.

Wulfsberg Electronics Division
A Chelton Group Company
Prescott Arizona, 86301 U.S.A.

SCHEMATIC, POWER SUPPLY

(RT-5000)

SIZE	CAGE CODE	DRAWING NUMBER	REV
D	1B7G3	152-015550	D
SCALE		SHEET 1 OF 1	

DRAWING NUMBER 152-015550 SHT 1 REV D

REVISIONS					
ZONE	REV	DESCRIPTION	DATE	APPROVED	APPROVED
	A	INITIAL RELEASE	5/8/92		S OWINGS
	B	REVISED PER DCN 8379			
	C	REVISED PER DCN 8569. CHANGE VALUES OF R43, R48, R800, R801, RP1, RP3, RP4 AND RP6.	9/10/95		B MURRAY
	D	REVISED PER DCN 9828. CHANGE R500 TO 500 OHMS	10/3/95		B MURRAY
	E	REVISED PER DCN 1278			

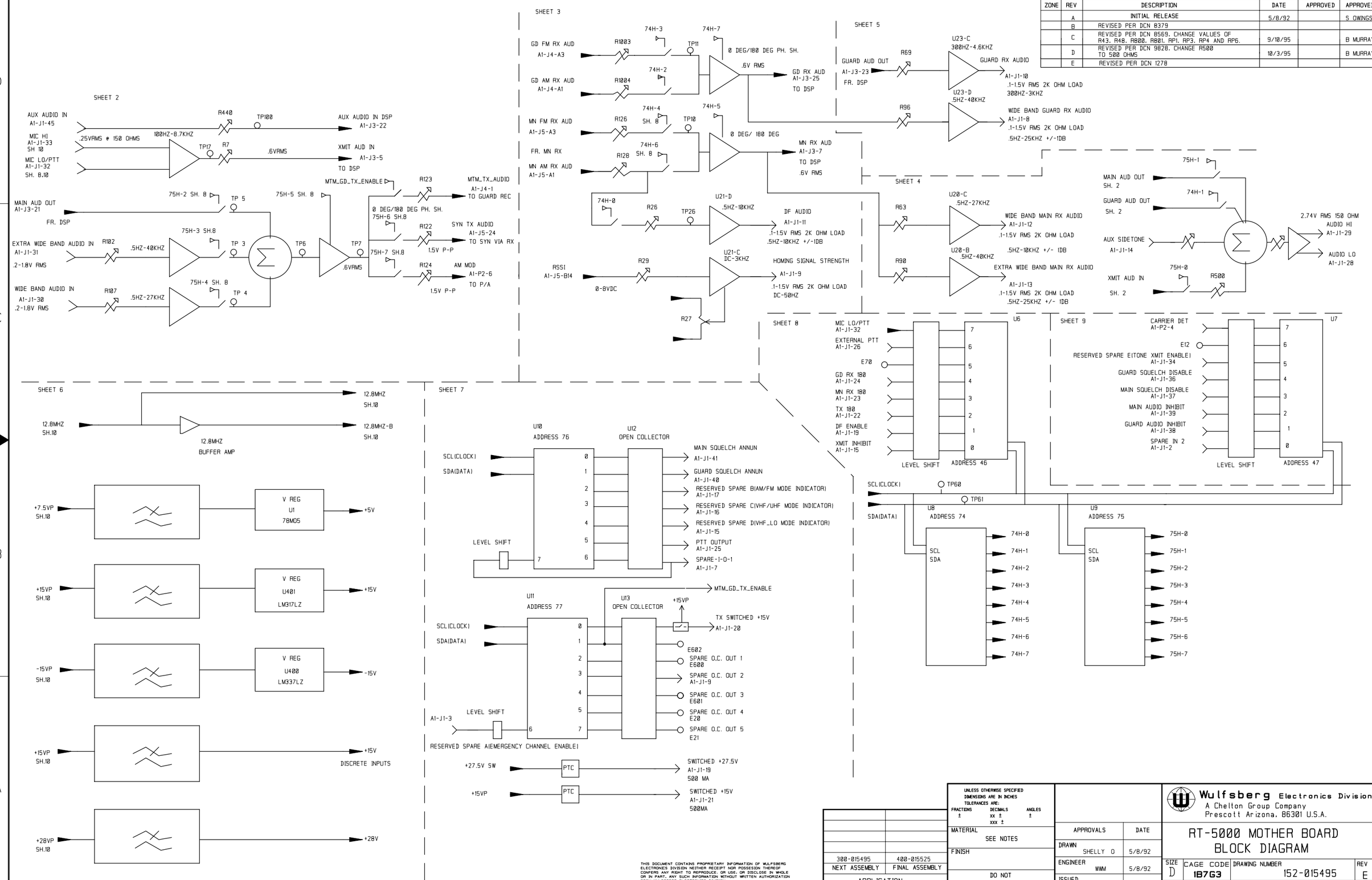

300-015495	400-015525
NEXT ASSEMBLY	FINAL ASSEMBLY
APPLICATION	

UNLESS OTHERWISE SPECIFIED DIMENSIONS ARE IN INCHES
TOLERANCES ARE:
FRACTIONS ± DECIMALS .xx ± .xxx ± ANGLES ±

MATERIAL SEE NOTES

FINISH

DO NOT SCALE DRAWING

APPROVALS	DATE
DRAWN SHELLY O	5/8/92
ENGINEER WWM	5/8/92
ISSUED S OWINGS	5/8/92

Wulfsberg Electronics Division
A Chelton Group Company
Prescott Arizona, 86301 U.S.A.

RT-5000 MOTHER BOARD BLOCK DIAGRAM

SIZE	CAGE CODE	DRAWING NUMBER	REV
D	1B7G3	152-015495	E

SCALE | SHEET 1 OF 10

DRAWING NUMBER 152-015495 SHT 1 REV E

THIS DOCUMENT CONTAINS PROPRIETARY INFORMATION OF WULFSBERG ELECTRONICS DIVISION NEITHER RECEIPT NOR POSSESION THEREOF CONFERS ANY RIGHT TO REPRODUCE, OR USE, OR DISCLOSE IN WHOLE OR IN PART, ANY SUCH INFORMATION WITHOUT WRITTEN AUTHORIZATION FROM WULFSBERG ELECTRONICS DIVISION.

NOTES

1) UNLESS OTHERWISE SPECIFIED
 A) ALL CAPACITORS 50V
 B)ALL RESISTORS 1/8W. 1%
2) CR1,R137 AND R1001 NOT NORMALLY INSTALLED

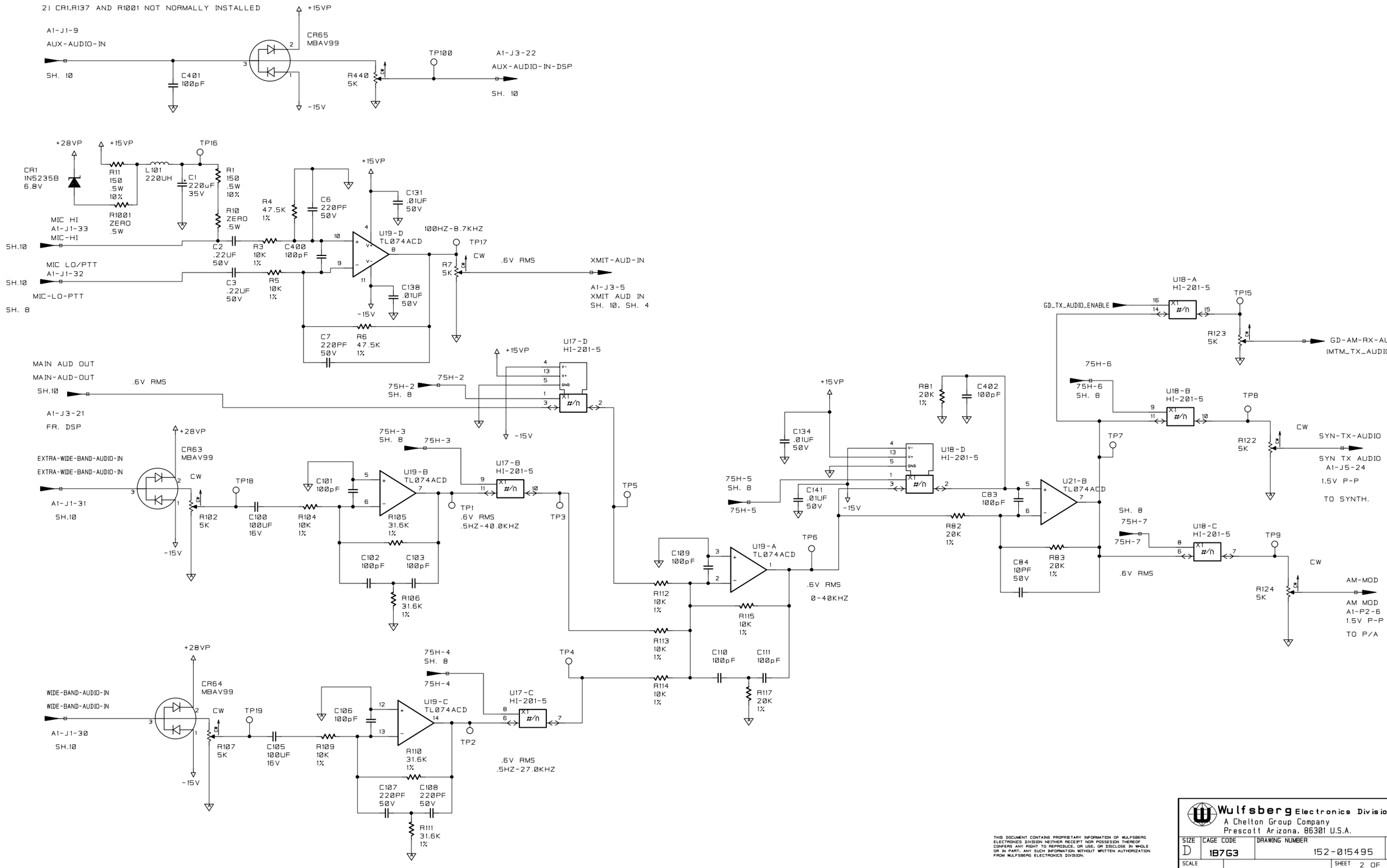

THIS DOCUMENT CONTAINS PROPRIETARY INFORMATION OF WULFSBERG ELECTRONICS DIVISION NEITHER RECEIPT NOR POSSESSION THEREOF CONFERS ANY RIGHT TO REPRODUCE, OR USE, OR DISCLOSE IN WHOLE OR IN PART, ANY SUCH INFORMATION WITHOUT WRITTEN AUTHORIZATION FROM WULFSBERG ELECTRONICS DIVISION.

Wulfsberg Electronics Division
A Chelton Group Company
Prescott Arizona, 86301 U.S.A.

SIZE	CAGE CODE	DRAWING NUMBER	REV
D	1B7G3	152-015495	E
SCALE		SHEET 2 OF 10	

DRAWING NUMBER 152-015495 SHT 2 REV E

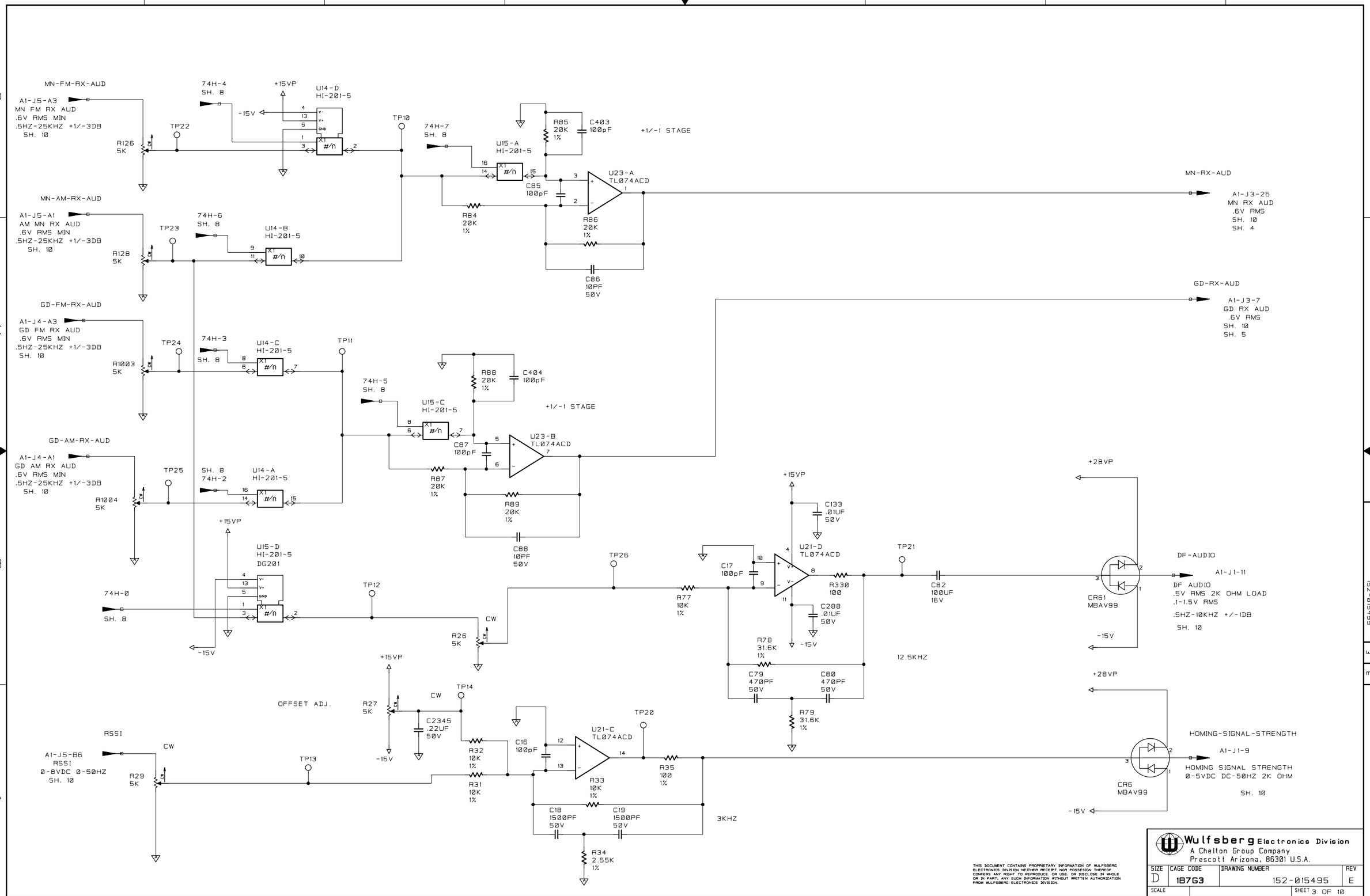

THIS DOCUMENT CONTAINS PROPRIETARY INFORMATION OF WULFSBERG ELECTRONICS DIVISION NEITHER RECEIPT NOR POSSESSION THEREOF CONFERS ANY RIGHT TO REPRODUCE, OR USE, OR DISCLOSE IN WHOLE OR IN PART, ANY SUCH INFORMATION WITHOUT WRITTEN AUTHORIZATION FROM WULFSBERG ELECTRONICS DIVISION.

Wulfsberg Electronics Division
A Chelton Group Company
Prescott Arizona, 86301 U.S.A.

SIZE	CAGE CODE	DRAWING NUMBER	REV
D	1B7G3	152-015495	E
SCALE		SHEET 3 OF 10	

DRAWING NUMBER 152-015495 SHT 3 REV E

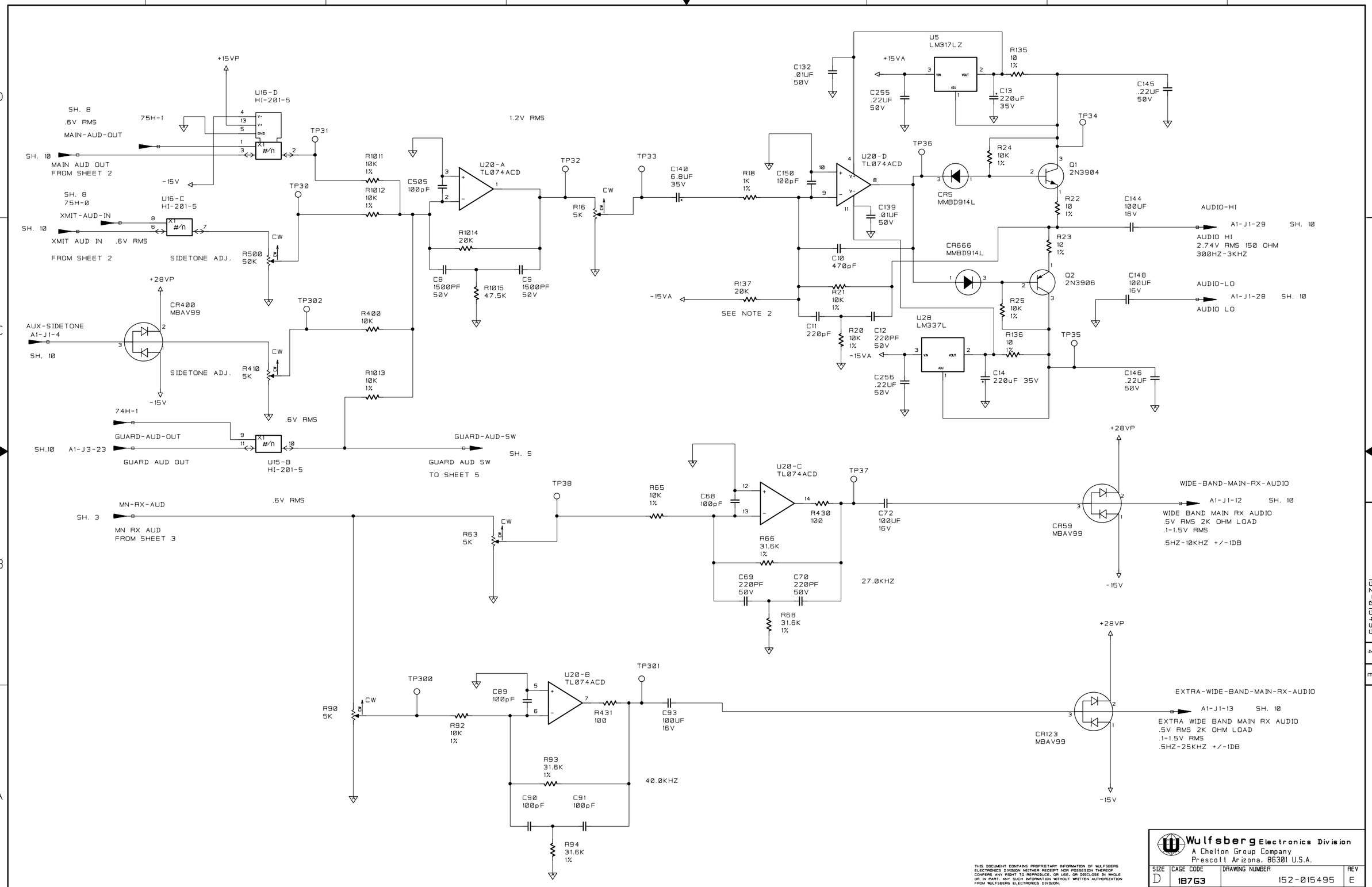

THIS DOCUMENT CONTAINS PROPRIETARY INFORMATION OF WULFSBERG ELECTRONICS DIVISION NEITHER RECEIPT NOR POSSESION THEREOF CONFERS ANY RIGHT TO REPRODUCE, OR USE, OR DISCLOSE IN WHOLE OR IN PART. ANY SUCH INFORMATION WITHOUT WRITTEN AUTHORIZATION FROM WULFSBERG ELECTRONICS DIVISION.

Wulfsberg Electronics Division
A Chelton Group Company
Prescott Arizona, 86301 U.S.A.

SIZE	CAGE CODE	DRAWING NUMBER	REV
D	1B7G3	152-015495	E
SCALE		SHEET 4 OF 10	

DRAWING NUMBER 152-015495 SHT 4 REV E

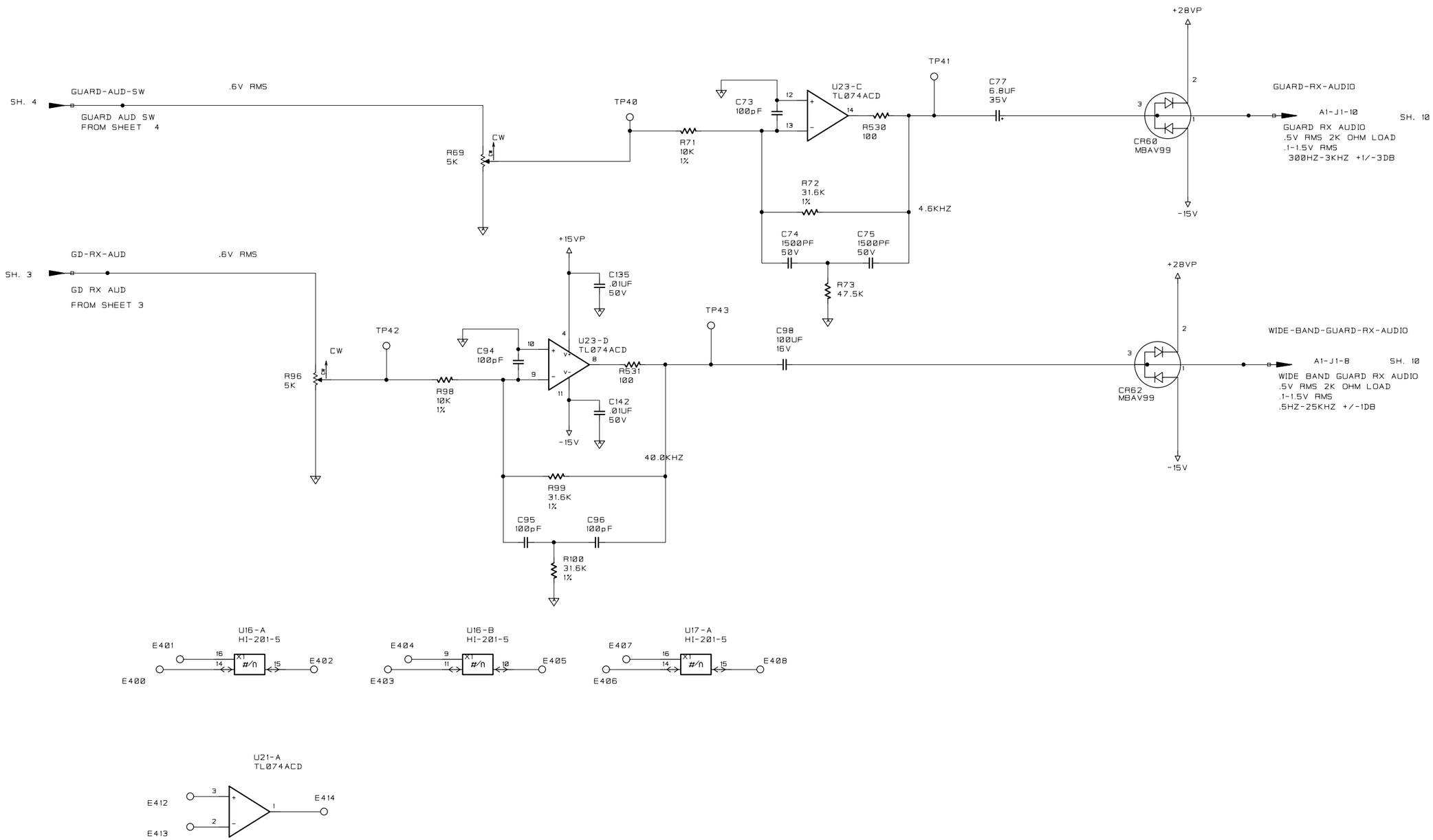

THIS DOCUMENT CONTAINS PROPRIETARY INFORMATION OF WULFSBERG ELECTRONICS DIVISION NEITHER RECEIPT NOR POSSESSION THEREOF CONFERS ANY RIGHT TO REPRODUCE, OR USE, OR DISCLOSE IN WHOLE OR IN PART, ANY SUCH INFORMATION WITHOUT WRITTEN AUTHORIZATION FROM WULFSBERG ELECTRONICS DIVISION.

Wulfsberg Electronics Division
A Chelton Group Company
Prescott Arizona, 86301 U.S.A.

SIZE	CAGE CODE	DRAWING NUMBER	REV
D	1B7G3	152-015495	E
SCALE		SHEET 5 OF 10	

DRAWING NUMBER 152-015495 SHT 5 REV E

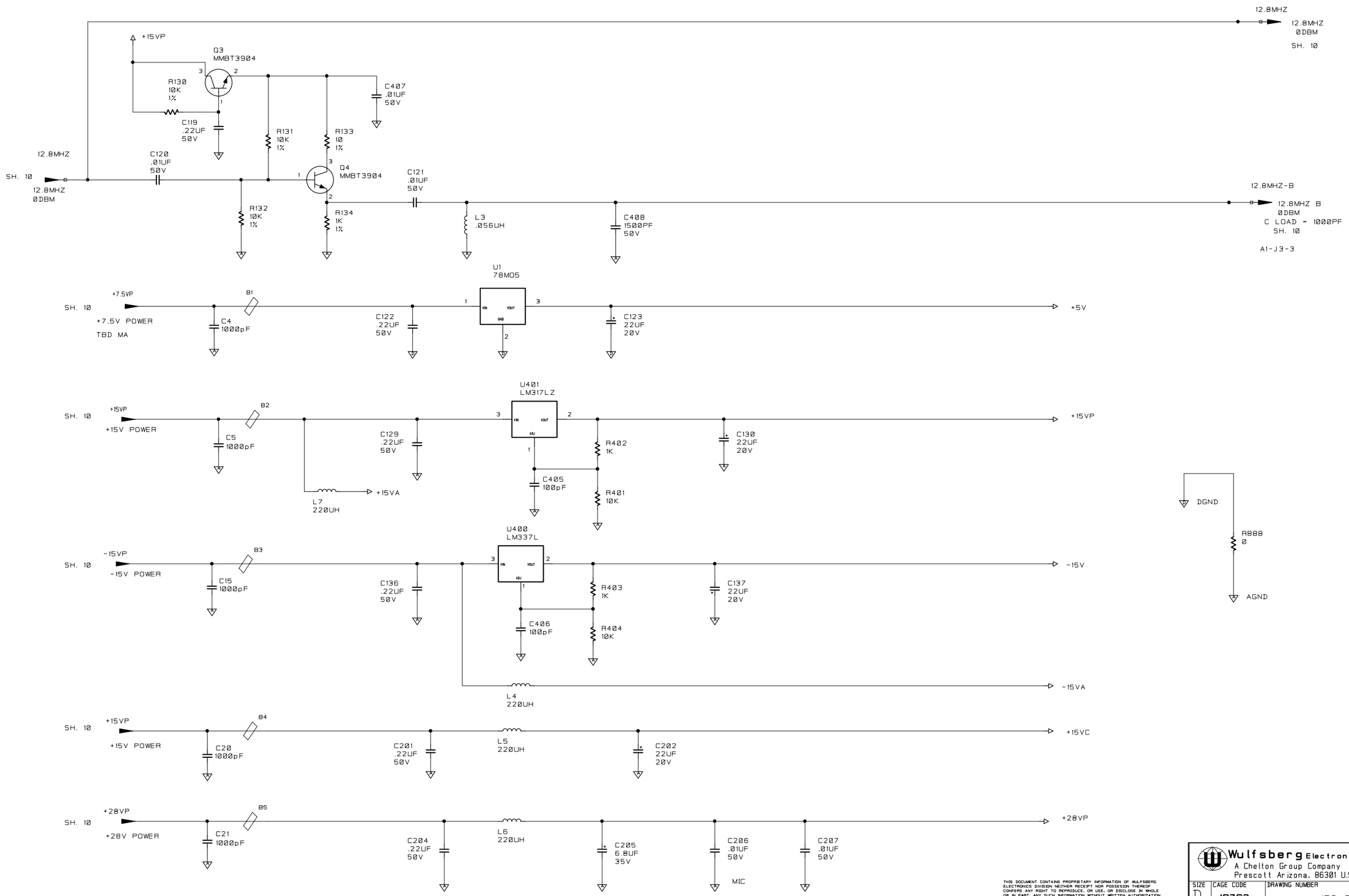

THIS DOCUMENT CONTAINS PROPRIETARY INFORMATION OF WULFSBERG ELECTRONICS DIVISION NEITHER RECEIPT NOR POSSESION THEREOF CONFERS ANY RIGHT TO REPRODUCE, OR USE, OR DISCLOSE IN WHOLE OR IN PART, ANY SUCH INFORMATION WITHOUT WRITTEN AUTHORIZATION FROM WULFSBERG ELECTRONICS DIVISION.

Wulfsberg Electronics Division
A Chelton Group Company
Prescott Arizona, 86301 U.S.A.

SIZE	CAGE CODE	DRAWING NUMBER	REV
D	1B7G3	152-015495	E
SCALE		SHEET 6 OF 10	

DRAWING NUMBER 152-015495 SHT 6 REV E

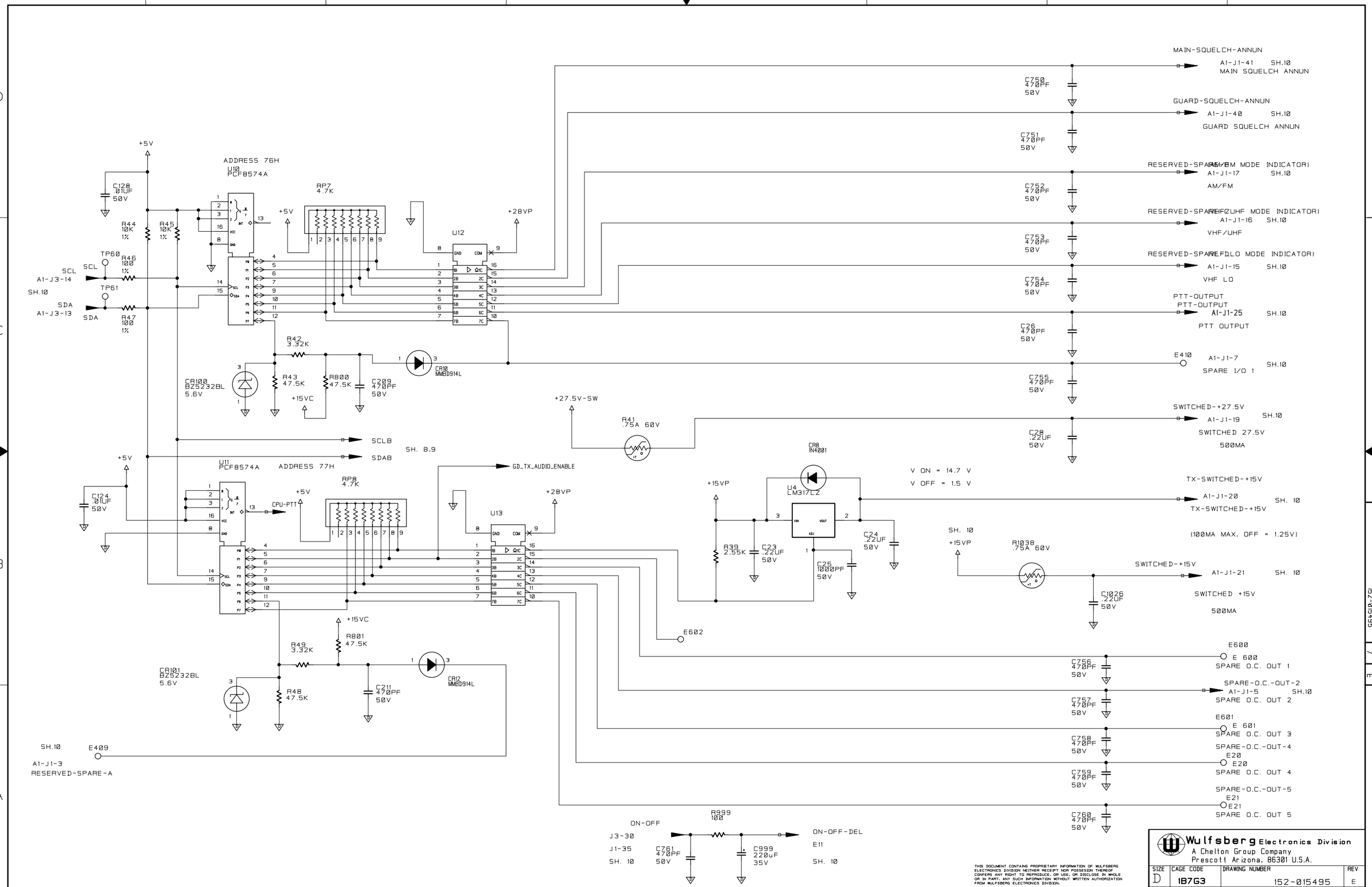
MAIN-SQUELCH-ANNUN
A1-J1-41 SH.10
MAIN SQUELCH ANNUN
GUARD-SQUELCH-ANNUN
A1-J1-40 SH.10
GUARD SQUELCH ANNUN
RESERVED-SPARE-B (AM/FM MODE INDICATOR)
A1-J1-17 SH.10
AM/FM
RESERVED-SPARE-C (VHF/UHF MODE INDICATOR)
A1-J1-16 SH.10
VHF/UHF
RESERVED-SPARE-D (VHF LO MODE INDICATOR)
A1-J1-15 SH.10
VHF LO
PTT-OUTPUT
A1-J1-25 SH.10
PTT OUTPUT
E410
A1-J1-7 SH.10
SPARE I/O 1
SWITCHED-+27.5V
A1-J1-19 SH.10
SWITCHED 27.5V
500MA
TX-SWITCHED-+15V
A1-J1-20 SH. 10
TX-SWITCHED-+15V
(100MA MAX. OFF = 1.25V)
SWITCHED-+15V
A1-J1-21 SH. 10
SWITCHED +15V
500MA
E600
E 600
SPARE O.C. OUT 1
SPARE-O.C.-OUT-2
A1-J1-5 SH.10
SPARE O.C. OUT 2
E601
E 601
SPARE O.C. OUT 3
SPARE-O.C.-OUT-4
E20
E20
SPARE O.C. OUT 4
SPARE-O.C.-OUT-5
E21
E21
SPARE O.C. OUT 5
C750 470PF 50V
C751 470PF 50V
C752 470PF 50V
C753 470PF 50V
C754 470PF 50V
C26 470PF 50V
C755 470PF 50V
C28 .22UF 50V
C1026 .22UF 50V
C756 470PF 50V
C757 470PF 50V
C758 470PF 50V
C759 470PF 50V
C760 470PF 50V
+5V
ADDRESS 76H
U10
PCF8574A
C128 .01UF 50V
R44 10K 1%
R45 10K 1%
TP60
R46 100 1%
SCL
A1-J3-14
SH.10
TP61
SDA
A1-J3-13
R47 100 1%
RP7 4.7K
+28VP
U12
R42 3.32K
CR100 BZ5232BL 5.6V
R43 47.5K
R800 47.5K
+15VC
C209 470PF 50V
CR10 MMSD914L
SCLB
SDAB
SH. 8.9
+27.5V-SW
R41 .75A 60V
CR8 1N4001
V ON = 14.7 V
V OFF = 1.5 V
U4 LM317LZ
+15VP
R39 2.55K
C23 .22UF 50V
C24 .22UF 50V
C25 1000PF 50V
SH. 10
R1038 .75A 60V
U11
PCF8574A
ADDRESS 77H
C124 .01UF 50V
CPU-PTT
RP8 4.7K
GD_TX_AUDIO_ENABLE
U13
E602
R801 47.5K
R49 3.32K
CR101 BZ5232BL 5.6V
R48 47.5K
C211 470PF 50V
CR12 MMSD914L
SH.10
E409
A1-J1-3
RESERVED-SPARE-A
R999 100
ON-OFF
J3-30
J1-35
SH. 10
C761 470PF 50V
C999 220uF 35V
ON-OFF-DEL
E11
SH. 10
THIS DOCUMENT CONTAINS PROPRIETARY INFORMATION OF WULFSBERG ELECTRONICS DIVISION NEITHER RECEIPT NOR POSSESSION THEREOF CONFERS ANY RIGHT TO REPRODUCE, OR USE, OR DISCLOSE IN WHOLE OR IN PART, ANY SUCH INFORMATION WITHOUT WRITTEN AUTHORIZATION FROM WULFSBERG ELECTRONICS DIVISION.
Wulfsberg Electronics Division
A Chelton Group Company
Prescott Arizona, 86301 U.S.A.
SIZE D
CAGE CODE 1B7G3
DRAWING NUMBER 152-015495
REV E
SCALE
SHEET 7 OF 10
DRAWING NUMBER 152-015495
SHT 7
REV E

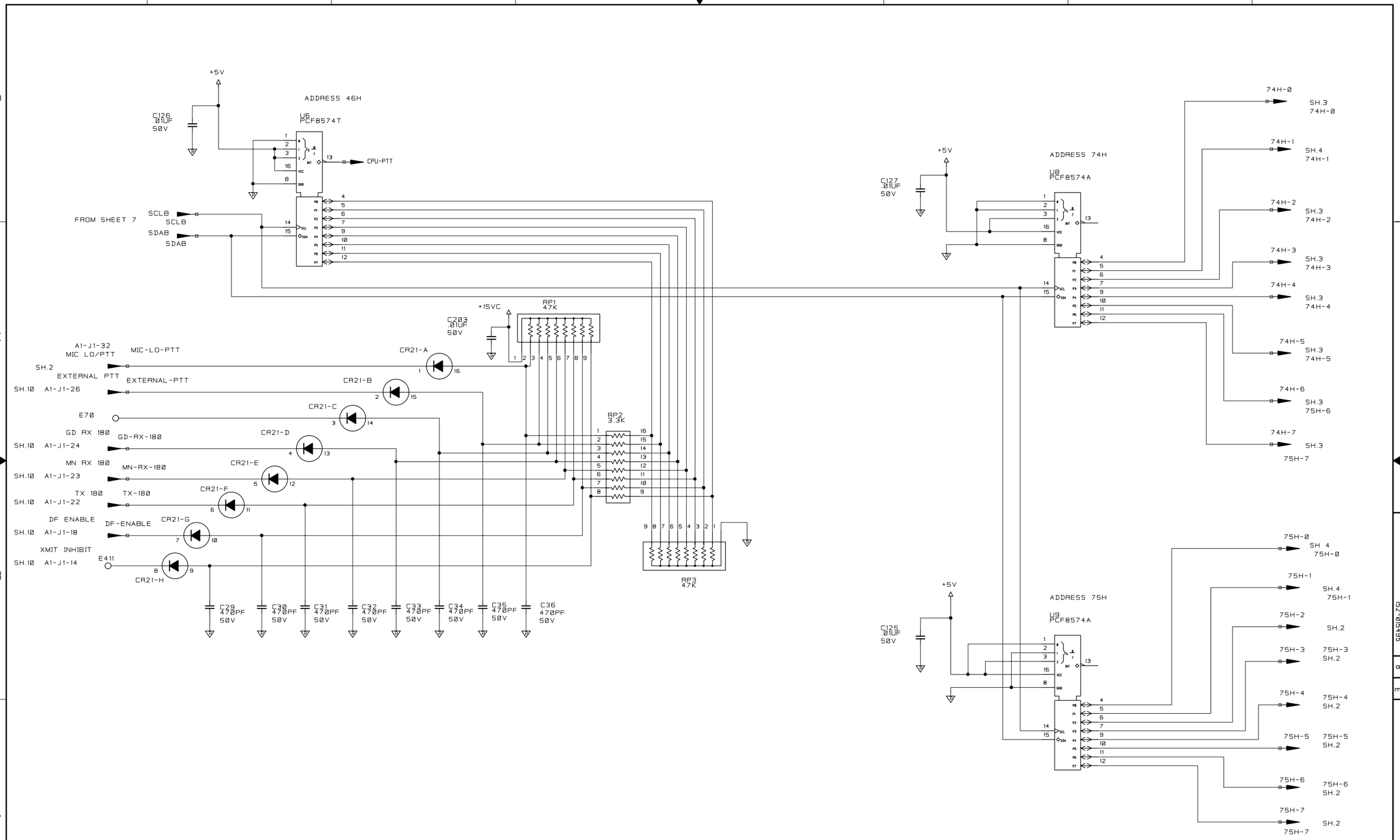

THIS DOCUMENT CONTAINS PROPRIETARY INFORMATION OF WULFSBERG ELECTRONICS DIVISION NEITHER RECEIPT NOR POSSESSION THEREOF CONFERS ANY RIGHT TO REPRODUCE, OR USE, OR DISCLOSE IN WHOLE OR IN PART, ANY SUCH INFORMATION WITHOUT WRITTEN AUTHORIZATION FROM WULFSBERG ELECTRONICS DIVISION.

Wulfsberg Electronics Division
A Chelton Group Company
Prescott Arizona, 86301 U.S.A.

SIZE	CAGE CODE	DRAWING NUMBER	REV
D	1B7G3	152-015495	E
SCALE		SHEET 8 OF 10	

DRAWING NUMBER 152-015495 SHT 8 REV E

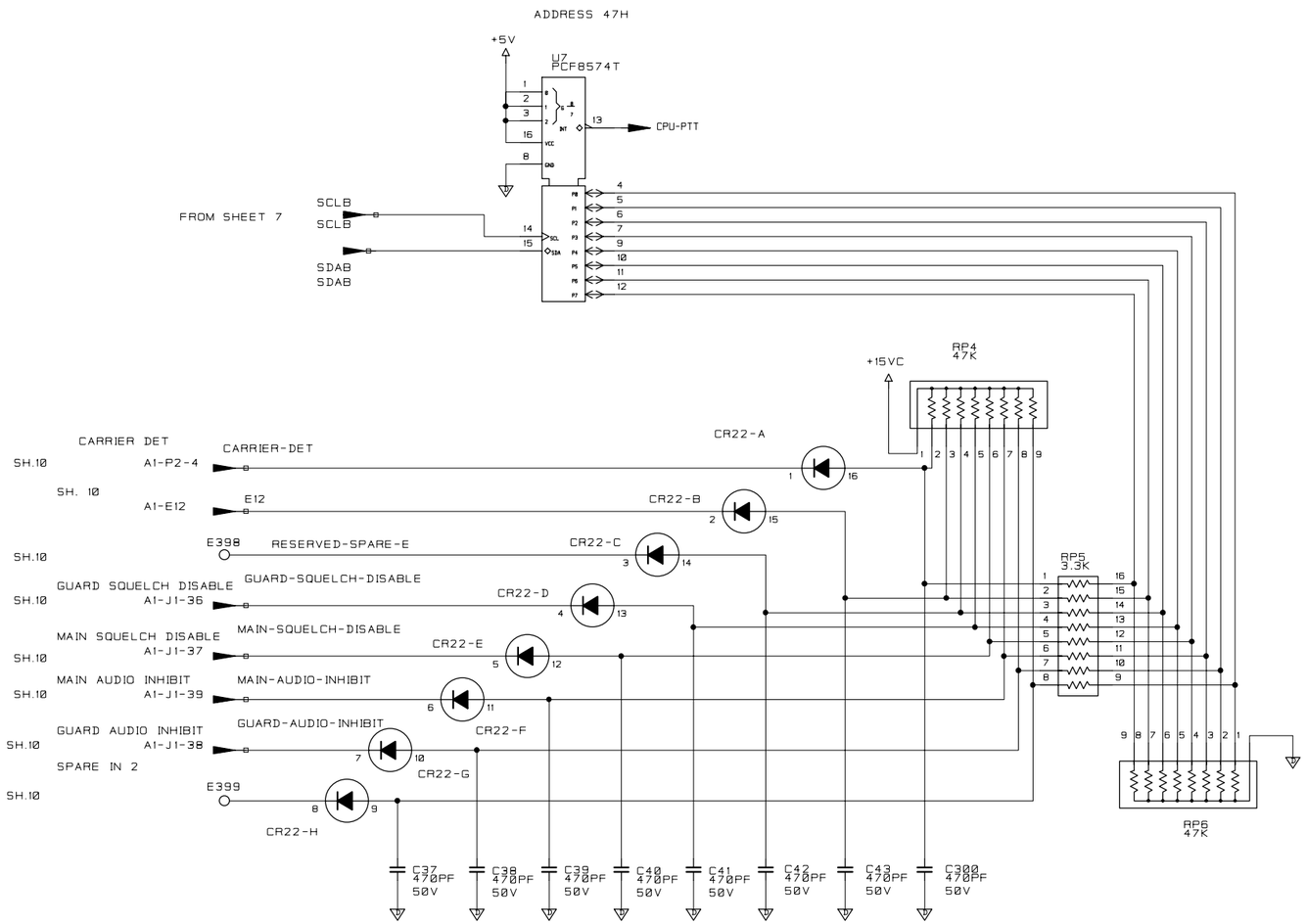

THIS DOCUMENT CONTAINS PROPRIETARY INFORMATION OF WULFSBERG ELECTRONICS DIVISION NEITHER RECEIPT NOR POSSESSION THEREOF CONFERS ANY RIGHT TO REPRODUCE, OR USE, OR DISCLOSE IN WHOLE OR IN PART. ANY SUCH INFORMATION WITHOUT WRITTEN AUTHORIZATION FROM WULFSBERG ELECTRONICS DIVISION.

Wulfsberg Electronics Division
A Chelton Group Company
Prescott Arizona, 86301 U.S.A.

SIZE	CAGE CODE	DRAWING NUMBER	REV
D	1B7G3	152-015495	E
SCALE		SHEET 9 OF 10	

DRAWING NUMBER 152-015495 SHT 9 REV E

NOTE:

NUMBERS IN ( ) ON A1-J1 CORRESPOND TO
RSS PC RS232 (9-PIN)

A1-J1 SYSTEM I/O

J1	48	ANT-TX-L
J1	19	SWITCHED-+27.5V
J1	20	TX-SWITCHED-+15V
J1	21	SWITCHED-+15V
J1	47	ANT-TX-H
J1 1 L650		CONTROL-GND
J1	42	DGND (5)
J1	27	AGND
J1	50	ANT-RX-H (RS422_2_TX_H)
J1	49	ANT-RX-L (RS422_2_TX_L)
J1	35	ON-OFF
J1	46	CONTROL-RX-H (RS422_1_TX_H)
J1	45	CONTROL-RX-L (RS422_1_TX_L)
J1	44	CONTROL-TX-L (RS422_1_RX_L)
J1	43	CONTROL-TX-H (RS422_1_RX_H)
J1	41	MAIN-SQUELCH-ANNUN
J1	40	GUARD-SQUELCH-ANNUN
J1	39	MAIN-AUDIO-INHIBIT
J1	38	GUARD-AUDIO-INHIBIT
J1	37	MAIN-SQUELCH-DISABLE
J1	36	GUARD-SQUELCH-DISABLE
J1	34	PC_PORT_TXD (3)
J1	33	MIC-HI
J1	32	MIC-LO-PTT
J1	31	EXTRA-WIDE-BAND-AUDIO-IN
J1	30	WIDE-BAND-AUDIO-IN
J1	29	AUDIO-HI
J1	28	AUDIO-LO
J1	26	EXTERNAL-PTT
J1	25	PTT-OUTPUT
J1	24	GD-RX-180
J1	23	MN-RX-180
J1	22	TX-180
J1	18	DF-ENABLE
J1	17	RESERVED-SPARE-B (AM/FM MODE INDICATOR)
J1	16	RESERVED-SPARE-C (VHF/UHF MODE INDICATOR)
J1	15	RESERVED-SPARE-D (VHF_LO MODE INDICATOR)
J1	14	PC_PORT_DTR (8,9)
J1	13	EXTRA-WIDE-BAND-MAIN-RX-AUDIO
J1	12	WIDE-BAND-MAIN-RX-AUDIO
J1	11	DF-AUDIO
J1	10	GUARD-RX-AUDIO
J1	9	HOMING-SIGNAL-STRENGTH
J1	8	WIDE-BAND-GUARD-RX-AUDIO
J1	7	PC_PORT_RXD (2)
J1	6	AUX-AUDIO-IN
J1	5	SPARE-O.C.-OUT-2
J1	4	AUX-SIDETONE
J1	3	KEYFAIL
J1	2	PC_PORT_RI (4)

A1-P2 TRANSMITTER

A3

P2	3	MN-LOC-DET
P2 1 L623		+27.5V-SW
P2	2	+27.5V-SW
P2	13	+15VP
P2	17	+7.5VP
P2	7	AGND
P2	8	AGND
P2	19	AGND
P2	24	-7.5VP
P2	14	-15VP
P2	5	
P2	10	
P2	9	SCL
P2	22	SDA
P2	11	AGND
P2	6	AM-MOD
P2	20	AGND
P2	4	CARRIER-DET
P2	12	AGND
P2	15	AGND
P2	16	AGND
P2	18	AGND
P2	21	AGND
P2	23	AGND
P2	25	+27.5V-SW
P2	26	+27.5V-SW

A1-P6 POWER SUPPLY

A2

+28VP	E1		+28VP
+27.5V-SW	E2		+27.5V-SW
+27.5V-SW	E3		+27.5V-SW
+15VP	E4		+15VP
+7.5VP	E5		+7.5VP
+7.5VP	E6		+7.5VP
AGND	E7		AGND
AGND	E8		AGND
-7.5VP	E9		-7.5VP
-15VP	E10		-15VP
ON-OFF-DEL	E11		ON-OFF-DEL
	E12	E90	E12

A1-J3 CPU-DSP

A4

J3	37	
J3	6	GD-FASTLOCK
J3	27	+15VP
J3	18	+7.5VP
J3 1 L537		AGND
J3	19	
J3	20	AGND
J3	2	-7.5VP
J3	8	-15VP
J3	30	ON-OFF
J3	29	GD-LOC-DET
J3	14	SCL
J3	13	SDA
J3	3	12.8MHZ-B
J3	35	MN-LOC-DET
J3	28	FASTLOCK
J3	15	LE1
J3	16	LS0
J3	17	LS1
J3	21	MAIN-AUD-OUT
J3	23	GUARD-AUD-OUT
J3	25	MN-RX-AUD
J3	7	GD-RX-AUD
J3	5	XMIT-AUD-IN
J3	36	LS2
J3	10	CONTROL-TX-H
J3	31	CONTROL-RX-H
J3	9	CONTROL-TX-L
J3	32	CONTROL-RX-L
J3	33	ANT-RX-H
J3	11	ANT-TX-L (RS422_2_RX_L)
J3	12	ANT-TX-H (RS422_2_RX_H)
J3	34	ANT-RX-L
J3	22	AUX-AUDIO-IN-DSP
J3	4	CPU-PTT
J3	26	MN-CARRIER-SQ
J3	24	GD-CARRIER-SQ

A1-J4 GUARD RECEIVER

A7

J4	9	+28VP
J4	20	PC_PORT_TXD
J4	21	PC_PORT_DTR
J4	6	+15VP
J4	8	+7.5VP
J4	2	AGND
J4	4	AGND
J4	10	AGND
J4	5	-7.5VP
J4	7	-15VP
J4	28	LS2
J4	23	PC_PORT_RXD
J4	12	SCL
J4	11	SDA
J4	31	12.8MHZ
J4	14	GD-LOC-DET
J4	16	GD-FASTLOCK
J4	29	LE1
J4	26	LS0
J4	27	LS1
J4 1 L532		GD-AM-RX-AUD (MTM_AUDIO_IN)
J4	3	GD-FM-RX-AUD (MTM_AUDIO_OUT)
J4	24	PC_PORT_RI
J4	22	KEYFAIL
J4	13	
J4	15	
J4	17	
J4	19	EPAD0 — EPAD0 — E396
J4	25	
J4	30	
J4	32	EPAD1 (+27.5VS) — EPAD1 — E397
J4	18	GD-CARRIER-SQ

A1-J5 MAIN RECEIVER

A5

J5	9	+28VP
J5	20	SPARE-51
J5	21	SPARE-52
J5	6	+15VP
J5	8	+7.5VP
J5	2	AGND
J5	4	AGND
J5	10	AGND
J5	5	-7.5VP
J5	7	-15VP
J5	28	LS2
J5	23	SPARE-53
J5	12	SCL
J5	11	SDA
J5	31	12.8MHZ
J5	14	MN-LOC-DET
J5	16	FASTLOCK
J5	29	LE1
J5	26	LS0
J5	27	LS1
J5 1 L532		MN-AM-RX-AUD
J5	3	MN-FM-RX-AUD
J5	24	SYN-TX-AUDIO
J5	22	RSSI
J5	13	
J5	15	
J5	17	
J5	19	
J5	25	
J5	30	
J5	32	
J5	18	MN-CARRIER-SQ

PWB MOUNTING HOLES

H1, H2, H3, H10, H11, H12

NON PLATED HOLES .250 DIA

H4, H7, H8, H9

NON PLATED HOLES .275 DIA

H5, H6, H13, H14

NON PLATED HOLES .312 DIA

TX

THIS DOCUMENT CONTAINS PROPRIETARY INFORMATION OF WULFSBERG ELECTRONICS DIVISION NEITHER RECEIPT NOR POSSESSION THEREOF CONFERS ANY RIGHT TO REPRODUCE, OR USE, OR DISCLOSE IN WHOLE OR IN PART, ANY SUCH INFORMATION WITHOUT WRITTEN AUTHORIZATION FROM WULFSBERG ELECTRONICS DIVISION.

Wulfsberg Electronics Division
A Chelton Group Company
Prescott Arizona, 86301 U.S.A.

SIZE	CAGE CODE	DRAWING NUMBER	REV
D	1B7G3	152-015495	E
SCALE		SHEET 10 OF 10	

DRAWING NUMBER 152-015495 SHT 10 REV E

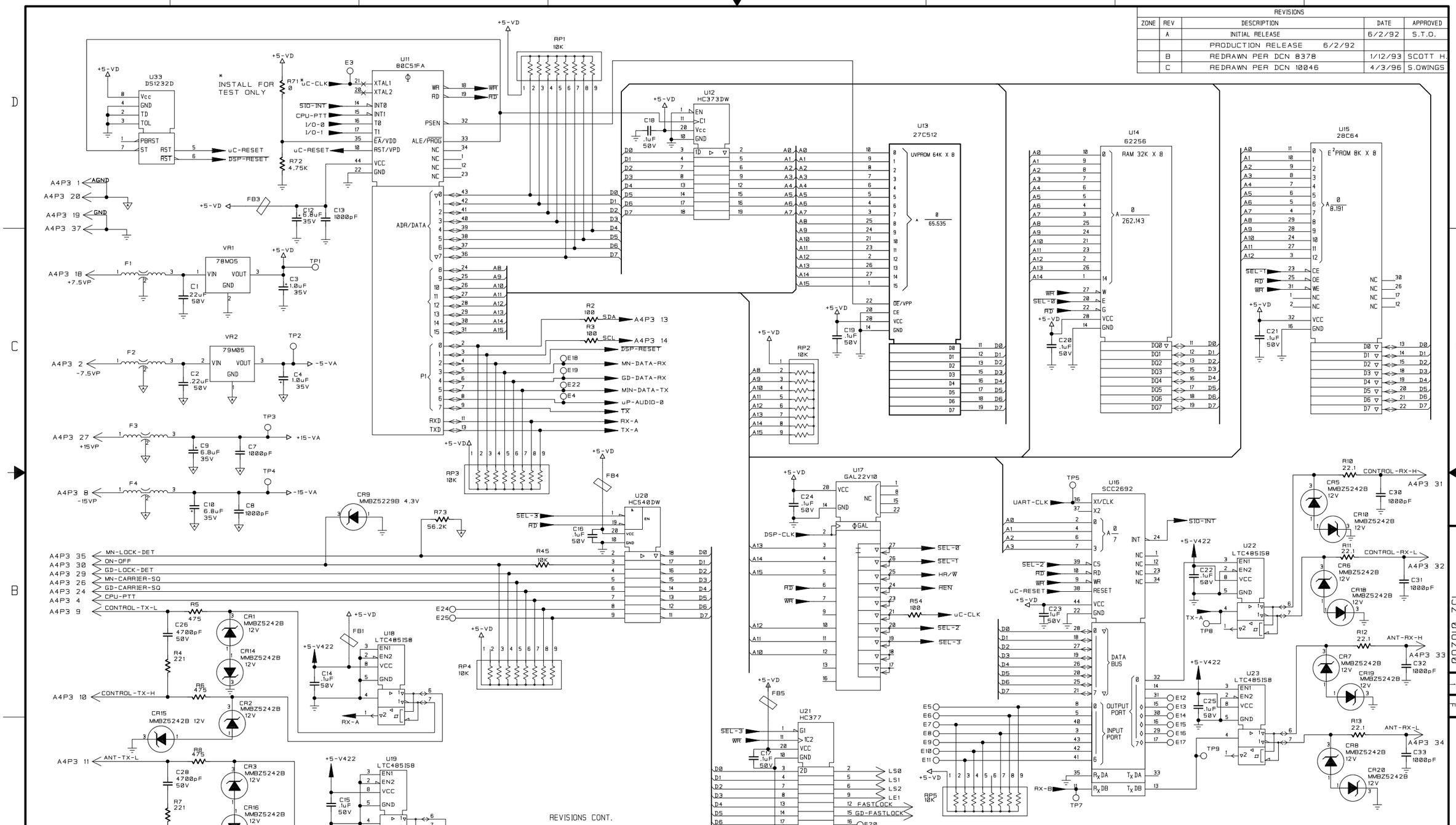

REVISIONS				
ZONE	REV	DESCRIPTION	DATE	APPROVED
	A	INITIAL RELEASE	6/2/92	S.T.O.
		PRODUCTION RELEASE 6/2/92		
	B	REDRAWN PER DCN 8378	1/12/93	SCOTT H.
	C	REDRAWN PER DCN 10046	4/3/96	S.OWINGS

REVISIONS CONT.			
REV	CO.NO./DCN	DATE	BY
4	127794	6-97	L.K.
E	W167	4-2-98	S.E.
F	W467		

THIS DOCUMENT CONTAINS PROPRIETARY INFORMATION OF WULFSBERG ELECTRONICS DIVISION NEITHER RECEIPT NOR POSSESSION THEREOF CONFERS ANY RIGHT TO REPRODUCE, OR USE, OR DISCLOSE IN WHOLE OR IN PART, ANY SUCH INFORMATION WITHOUT WRITTEN AUTHORIZATION FROM WULFSBERG ELECTRONICS DIVISION.

300-016260	400-
NEXT ASSEMBLY	FINAL ASSEMBLY
APPLICATION	

UNLESS OTHERWISE SPECIFIED DIMENSIONS ARE IN INCHES
TOLERANCES ARE:
FRACTIONS ± DECIMALS .xx ± .xxx ± ANGLES ±

MATERIAL: SEE NOTES

FINISH

DO NOT SCALE DRAWING

APPROVALS		DATE
DRAWN	VERN	1/3/91
ENGINEER	SCOTT H.	1/12/93
ISSUED	STEVE O.	6/2/92

Wulfsberg Electronics Division
A Chelton Group Company
Prescott Arizona, 86301 U.S.A.

RT-5000 DSP/LOGIC

SIZE	CAGE CODE	DRAWING NUMBER	REV
D	18763	152-016260	F
SCALE NONE		SHEET 1 OF 3	

DRAWING NUMBER 152-016260 SHT 1 REV F

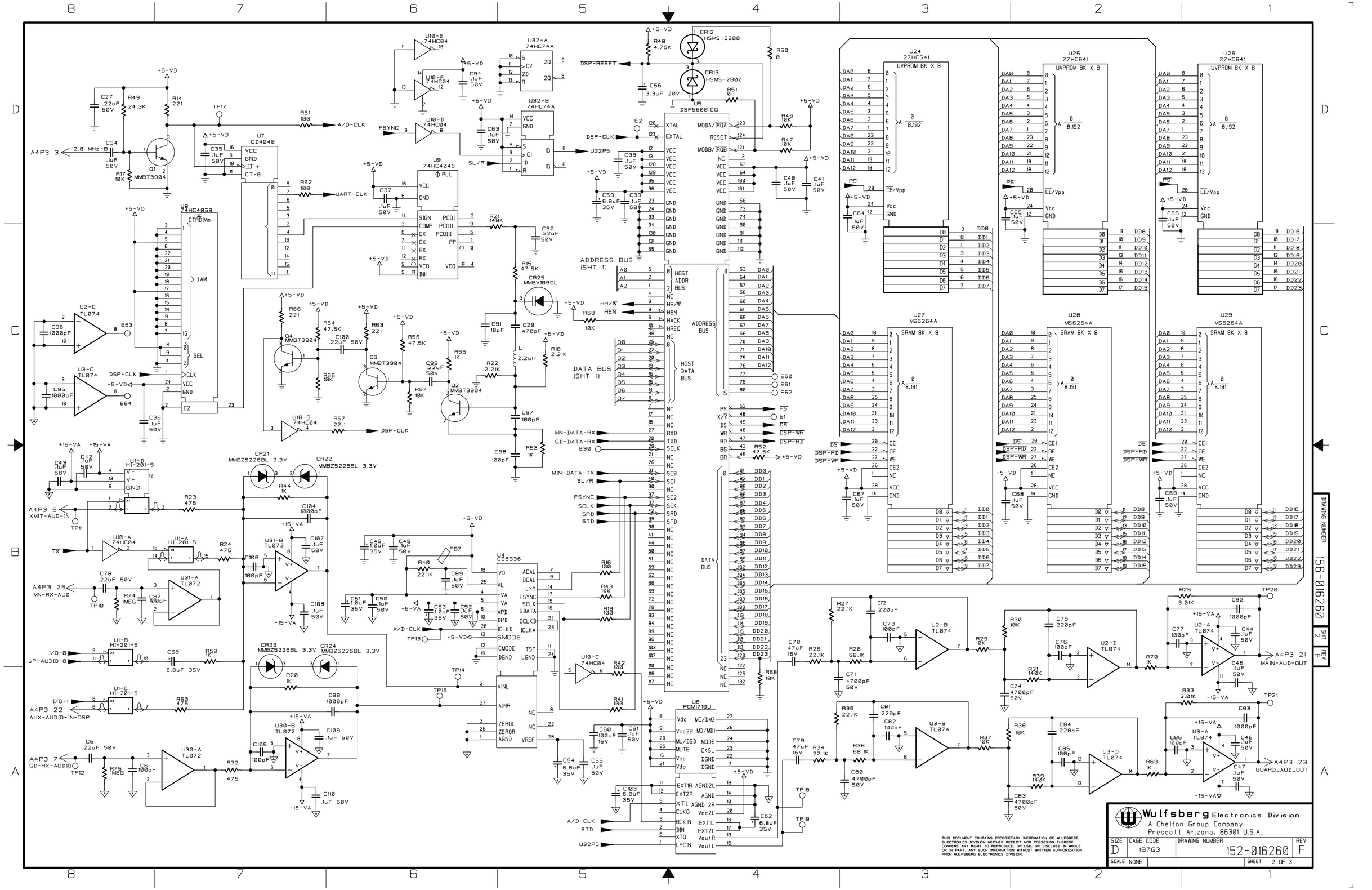
U24
27HC641
UVPROM 8K X 8
U25
27HC641
UVPROM 8K X 8
U26
27HC641
UVPROM 8K X 8
U27
MS6264A
SRAM 8K X 8
U28
MS6264A
SRAM 8K X 8
U29
MS6264A
SRAM 8K X 8
U5
DSP5680ICQ
U4
CS5336
U6
PCM1710U
U7
CD4040
U8
74HC4059
U9
74HC4046
U32-A
74HC74A
U32-B
74HC74A
CR12
HSMS-2800
CR13
HSMS-2800
CR25
MMBV109GL
CR21
MMBZ5226BL 3.3V
CR22
MMBZ5226BL 3.3V
CR23
MMBZ5226BL 3.3V
CR24
MMBZ5226BL 3.3V
ADDRESS BUS
(SHT 1)
DATA BUS
(SHT 1)
HOST ADDR BUS
HOST DATA BUS
A/D-CLK
UART-CLK
DSP-CLK
DSP-RESET
FSYNC
SL/R
MN-DATA-RX
GD-DATA-RX
MIN-DATA-TX
SL/R
FSYNC
SCLK
SRD
STD
A4P3 3
12.8 MHz-B
A4P3 5
XMIT-AUD-IN
A4P3 25
MN-RX-AUD
A4P3 7
GD-RX-AUDIO
A4P3 22
AUX-AUDIO-IN-DSP
A4P3 21
MAIN-AUD-OUT
A4P3 23
GUARD_AUD_OUT
+15-VA
-15-VA
+5-VD
U32P5
TP10
TP11
TP12
TP13
TP14
TP15
TP17
TP18
TP19
TP20
TP21
Wulfsberg Electronics Division
A Chelton Group Company
Prescott Arizona, 86301 U.S.A.
SIZE D
CAGE CODE 1B7G3
DRAWING NUMBER 152-016260
REV F
SCALE NONE
SHEET 2 OF 3
THIS DOCUMENT CONTAINS PROPRIETARY INFORMATION OF WULFSBERG ELECTRONICS DIVISION NEITHER RECEIPT NOR POSSESION THEREOF CONFERS ANY RIGHT TO REPRODUCE, OR USE, OR DISCLOSE IN WHOLE OR IN PART, ANY SUCH INFORMATION WITHOUT WRITTEN AUTHORIZATION FROM WULFSBERG ELECTRONICS DIVISION.

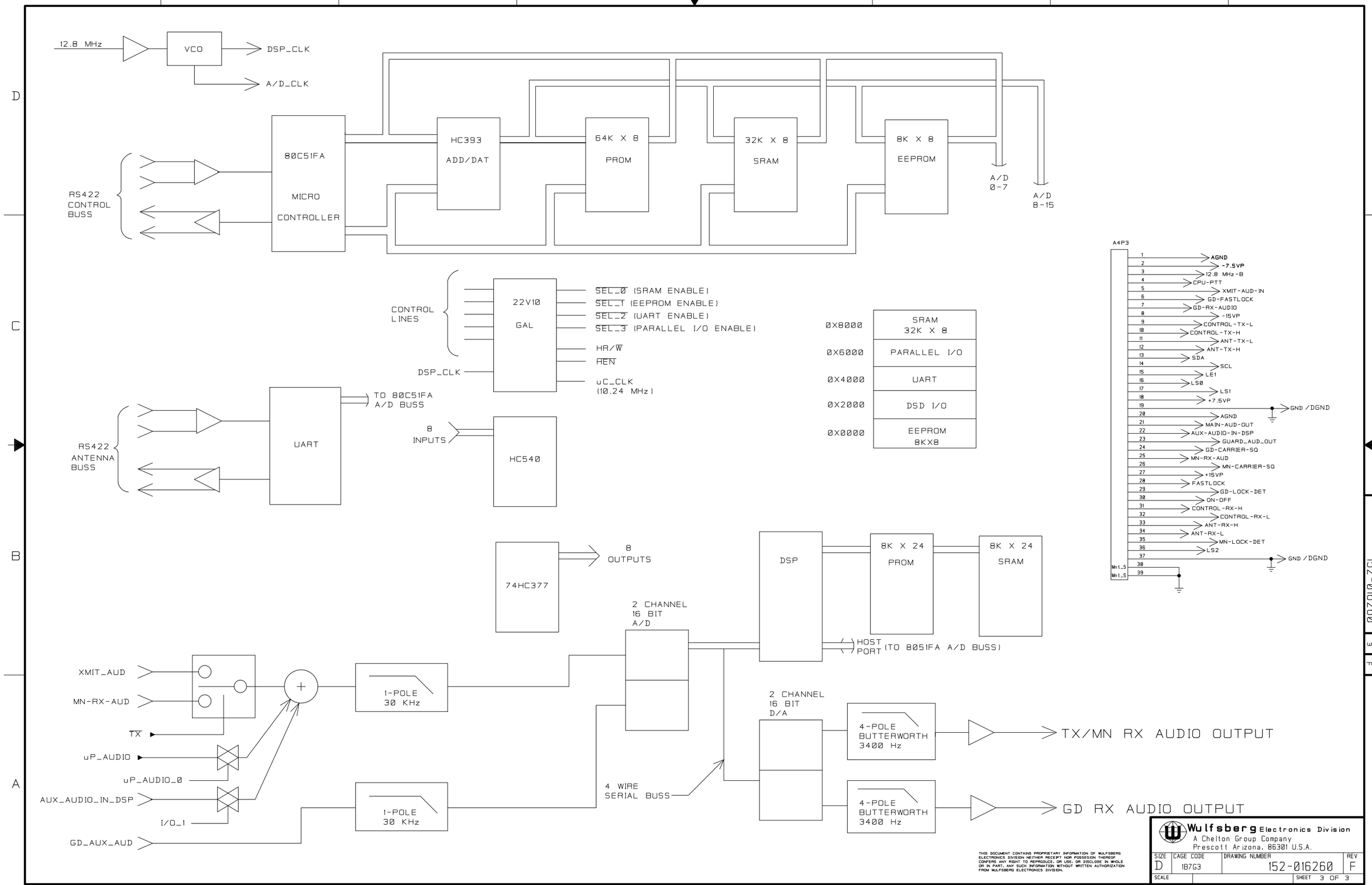

THIS DOCUMENT CONTAINS PROPRIETARY INFORMATION OF WULFSBERG ELECTRONICS DIVISION NEITHER RECEIPT NOR POSSESION THEREOF CONFERS ANY RIGHT TO REPRODUCE, OR USE, OR DISCLOSE IN WHOLE OR IN PART, ANY SUCH INFORMATION WITHOUT WRITTEN AUTHORIZATION FROM WULFSBERG ELECTRONICS DIVISION.

Wulfsberg Electronics Division
A Chelton Group Company
Prescott Arizona, 86301 U.S.A.

SIZE	CAGE CODE	DRAWING NUMBER	REV
D	18763	152-016260	F
SCALE		SHEET 3 OF 3	

DRAWING NUMBER 152-016260 SHT 3 REV F

REVISIONS				
ZONE	REV	DESCRIPTION	DATE	APPROVED
	A	INITIAL RELEASE	4-26-95	C.F.
		PRODUCTION RELEASE	4-26-95	
	B	REVISED PER DCN #9616 INCORP. EOS 2240 & 2245	6-27-95	R.DELONG
	C	REDRAWN PER DCN 9735	6-27-95	SCOTT H.
	D	REDRAWN PER DCN 10024		
	5	ECO 118876	10-22-96	
	6	ECO 128497	7-18-97	L.K.
	G	REDRAWN PER DCN W328	11-18-98	S.ELLIOTT
	H	REDRAWN PER DCN W1225	10-2-00	V.WALLACE
	J	REDRAWN PER DCN W1437		
	J	REDRAWN PER DCN W1440		

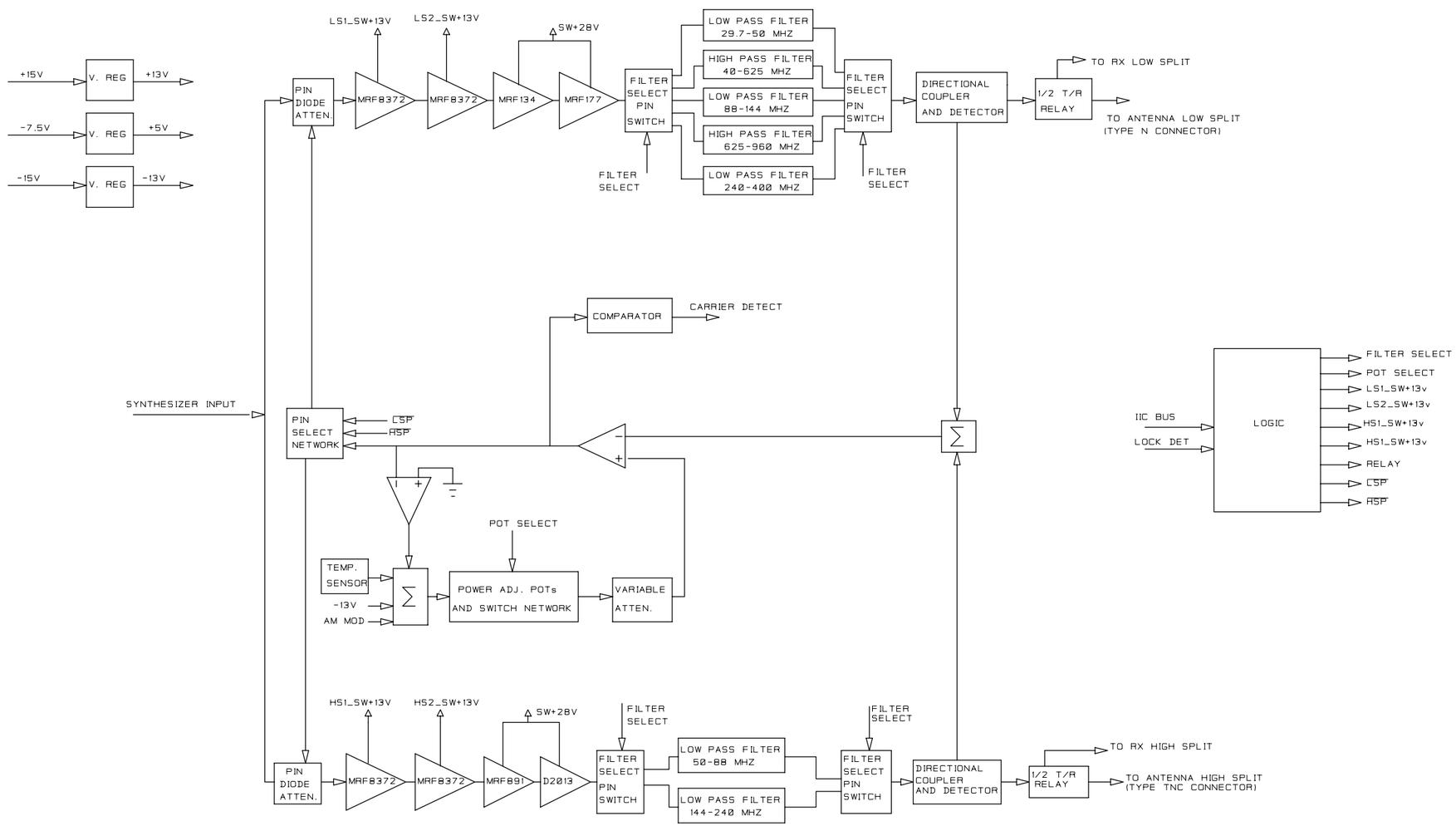

THIS DOCUMENT CONTAINS PROPRIETARY INFORMATION OF WULFSBERG ELECTRONICS DIVISION NEITHER RECEIPT NOR POSSESSION THEREOF CONFERS ANY RIGHT TO REPRODUCE, OR USE, OR DISCLOSE IN WHOLE OR IN PART. ANY SUCH INFORMATION WITHOUT WRITTEN AUTHORIZATION FROM WULFSBERG ELECTRONICS DIVISION.

300-018435	400-015525
NEXT ASSEMBLY	FINAL ASSEMBLY
APPLICATION	

UNLESS OTHERWISE SPECIFIED DIMENSIONS ARE IN INCHES TOLERANCES ARE:
FRACTIONS ± DECIMALS xx ± xxx ± ANGLES ±

MATERIAL: SEE NOTES
FINISH: SEE NOTES
DO NOT SCALE DRAWING

APPROVALS	DATE
DRAWN R. DELONG	3/30/94
ENGINEER R. DELONG	3/30/94
ISSUED T.BEGAY	4-26-95

Wulfsberg Electronics Division
A Chelton Group Company
Prescott Arizona, 86301 U.S.A.

SCHEMATIC DIAGRAM, TRANSMITTER
(RT-5000)

SIZE	CAGE CODE	DRAWING NUMBER	REV
D	1B7G3	152-018240	K
SCALE NONE		SHEET 1 OF 5	

DRAWING NUMBER 152-018240 SHT 1 REV K

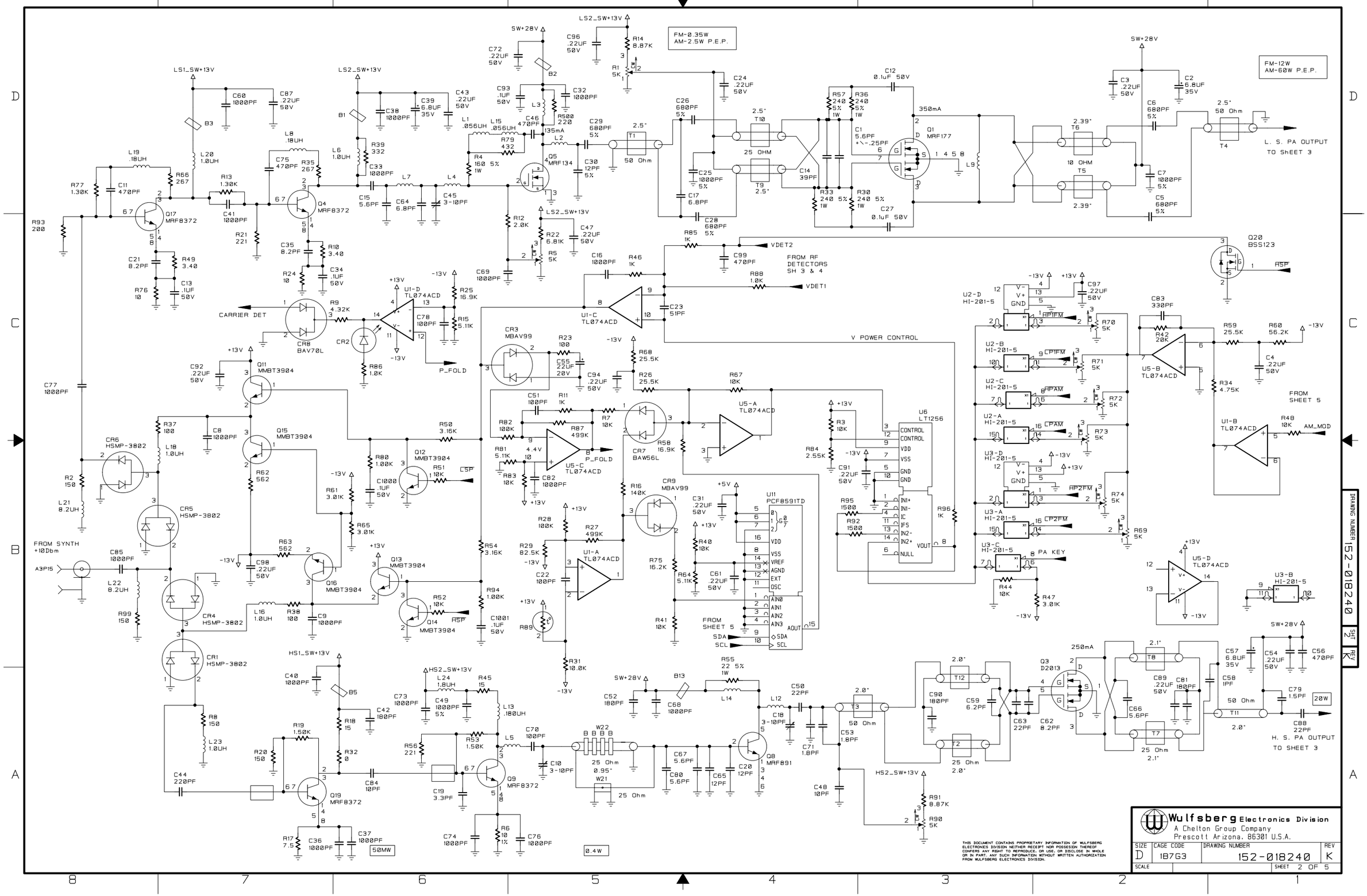
FM-0.35W
AM-2.5W P.E.P.
FM-12W
AM-60W P.E.P.
L. S. PA OUTPUT
TO SHEET 3
H. S. PA OUTPUT
TO SHEET 3
FROM RF
DETECTORS
SH 3 & 4
V POWER CONTROL
FROM SHEET 5
FROM SHEET 5
FROM SYNTH
+10Dbm
CARRIER DET
P_FOLD
AM_MOD
PA KEY
Wulfsberg Electronics Division
A Chelton Group Company
Prescott Arizona, 86301 U.S.A.
SIZE D
CAGE CODE 1B7G3
DRAWING NUMBER 152-018240
REV K
SCALE
SHEET 2 OF 5
DRAWING NUMBER 152-018240
SHT 2
REV K
THIS DOCUMENT CONTAINS PROPRIETARY INFORMATION OF WULFSBERG ELECTRONICS DIVISION NEITHER RECEIPT NOR POSSESSION THEREOF CONFERS ANY RIGHT TO REPRODUCE, OR USE, OR DISCLOSE IN WHOLE OR IN PART, ANY SUCH INFORMATION WITHOUT WRITTEN AUTHORIZATION FROM WULFSBERG ELECTRONICS DIVISION.

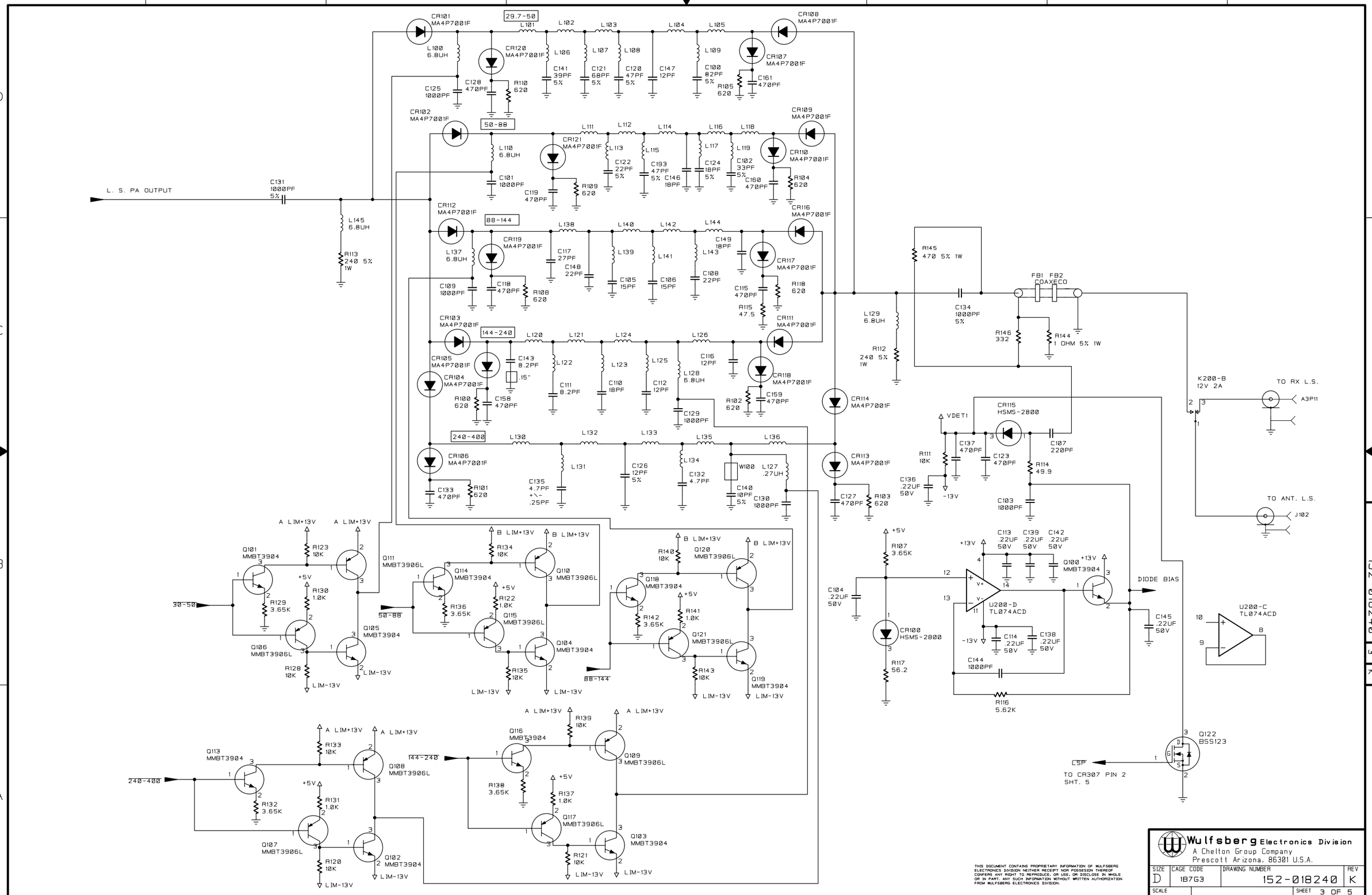

Wulfsberg Electronics Division
A Chelton Group Company
Prescott Arizona, 86301 U.S.A.

SIZE	CAGE CODE	DRAWING NUMBER	REV
D	1B7G3	152-018240	K
SCALE		SHEET 3 OF 5	

DRAWING NUMBER 152-018240 SHT 3 REV K

THIS DOCUMENT CONTAINS PROPRIETARY INFORMATION OF WULFSBERG ELECTRONICS DIVISION NEITHER RECEIPT NOR POSSESION THEREOF CONFERS ANY RIGHT TO REPRODUCE, OR USE, OR DISCLOSE IN WHOLE OR IN PART. ANY SUCH INFORMATION WITHOUT WRITTEN AUTHORIZATION FROM WULFSBERG ELECTRONICS DIVISION.

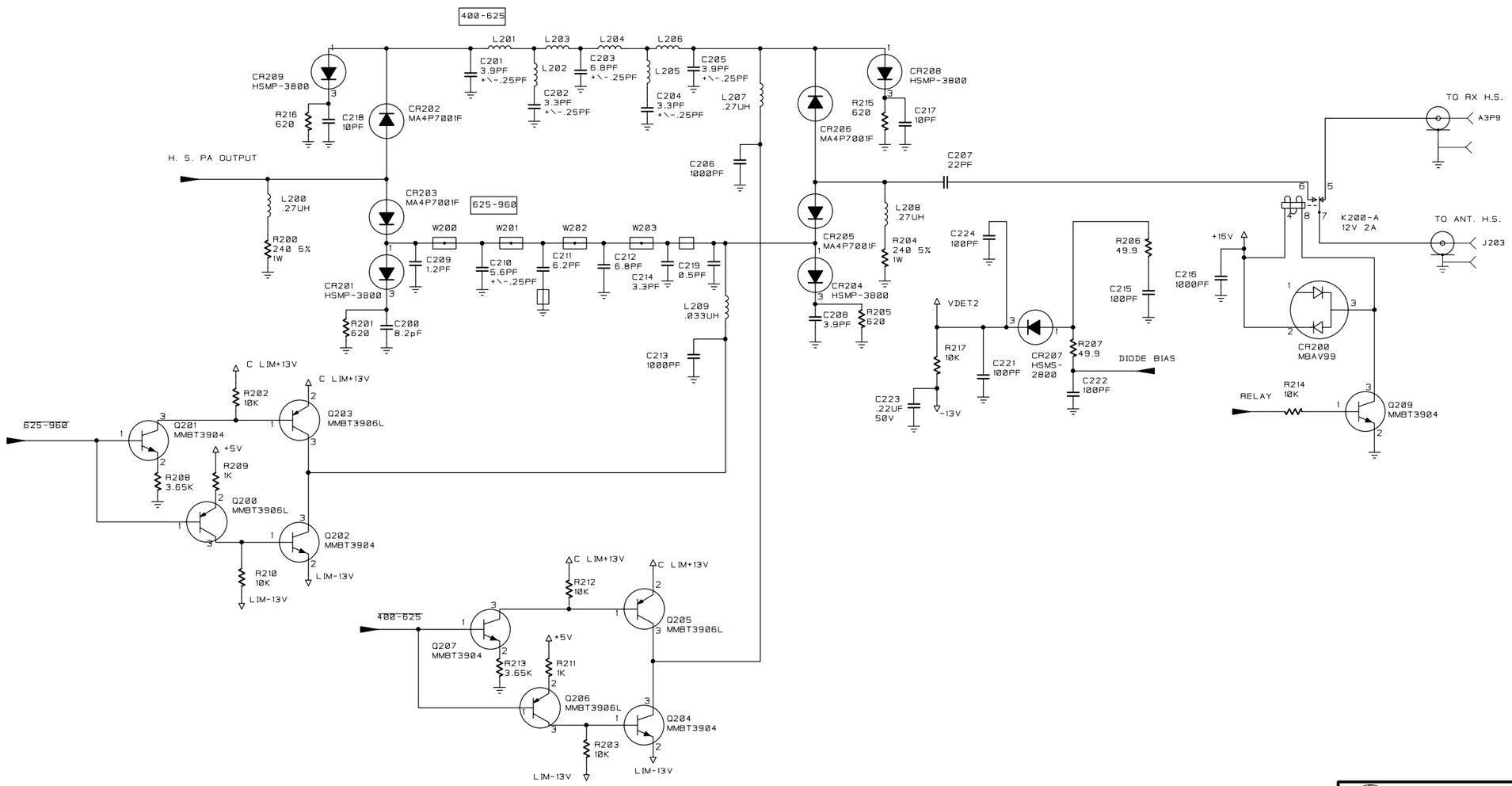

THIS DOCUMENT CONTAINS PROPRIETARY INFORMATION OF WULFSBERG ELECTRONICS DIVISION NEITHER RECEIPT NOR POSSESION THEREOF CONFERS ANY RIGHT TO REPRODUCE, OR USE, OR DISCLOSE IN WHOLE OR IN PART, ANY SUCH INFORMATION WITHOUT WRITTEN AUTHORIZATION FROM WULFSBERG ELECTRONICS DIVISION.

Wulfsberg Electronics Division
A Chelton Group Company
Prescott Arizona, 86301 U.S.A.

SIZE	CAGE CODE	DRAWING NUMBER	REV
D	1B7G3	152-018240	K
SCALE		SHEET 4 OF 5	

DRAWING NUMBER 152-018240 SHT 4 REV K

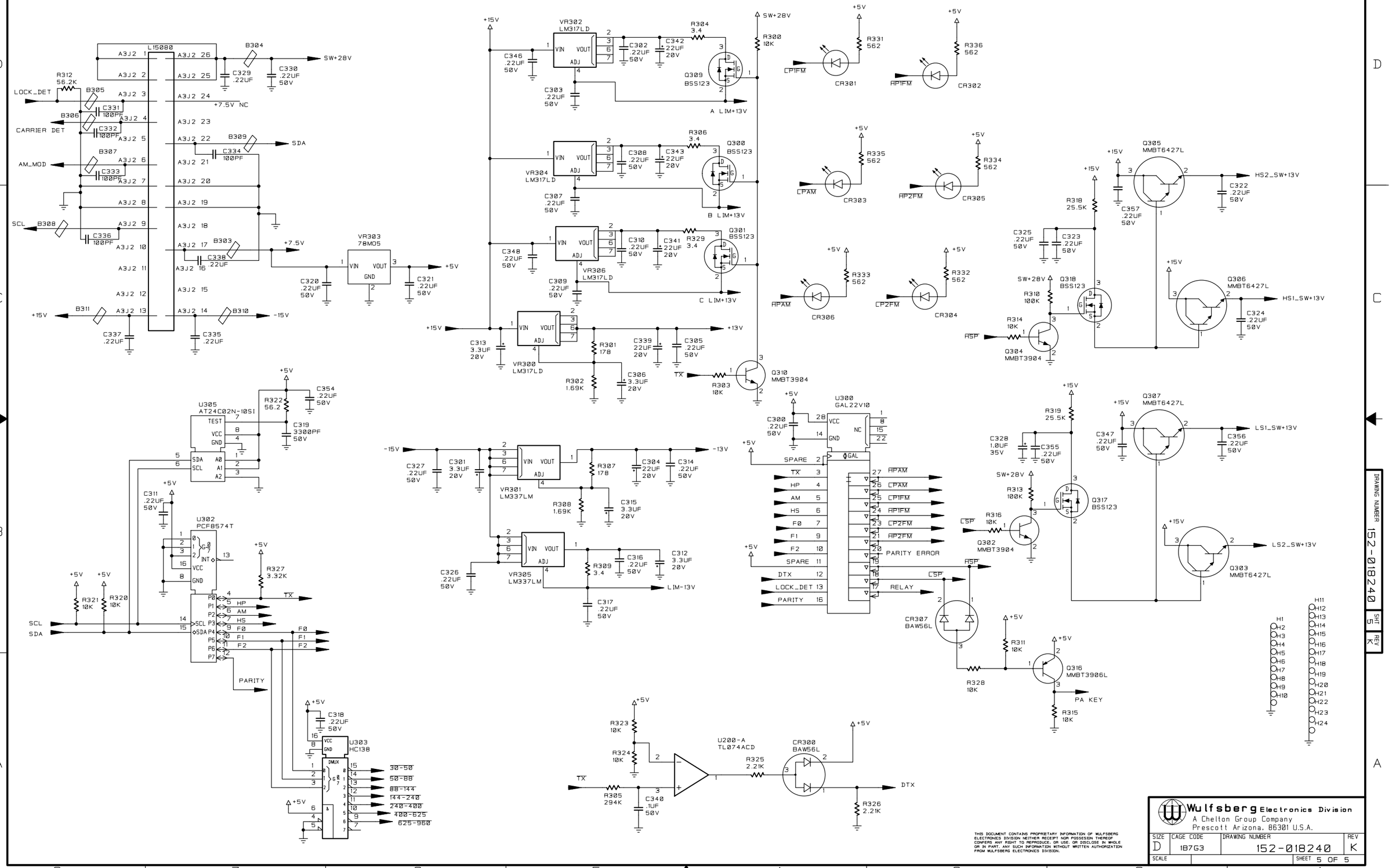

THIS DOCUMENT CONTAINS PROPRIETARY INFORMATION OF WULFSBERG ELECTRONICS DIVISION NEITHER RECEIPT NOR POSSESSION THEREOF CONFERS ANY RIGHT TO REPRODUCE, OR USE, OR DISCLOSE IN WHOLE OR IN PART. ANY SUCH INFORMATION WITHOUT WRITTEN AUTHORIZATION FROM WULFSBERG ELECTRONICS DIVISION.

Wulfsberg Electronics Division
A Chelton Group Company
Prescott Arizona, 86301 U.S.A.

SIZE	CAGE CODE	DRAWING NUMBER	REV
D	1B7G3	152-018240	K
SCALE		SHEET 5 OF 5	

DRAWING NUMBER 152-018240 SHT 5 REV K