S T S L A B

RADIO DFS TEST REPORT

Report No.:STS1903192W03

Issued for

VTech Electronics Limited

23/F, Tai Ping Industrial Centre, Block 1, 57 Ting Kok Road,
Tai Po, Hong Kong

Product Name:	KidiBuzz™ G2
Brand Name:	vtech
Model Name:	1866
Series Model:	N/A
FCC ID:	G2R-1866
Test Standard:	FCC Part 15.407

Any reproduction of this document must be done in full. No single part of this document may be reproduced without permission from STS, All Test Data Presented in this report is only applicable to presented Test sample.

Shenzhen STS Test Services Co., Ltd.
1/F., Building B, Zhuoke Science Park, No.190, Chongqing Road,
Fuyong Street, Bao'an District, Shenzhen, Guangdong, China
TEL: +86-755 3688 6288 FAX: +86-755 3688 6277 E-mail:sts@stsapp.com

TEST REPORT CERTIFICATION

Applicant's Name ..... :	**VTech Electronics Limited**
Address ..... :	23/F, Tai Ping Industrial Centre, Block 1, 57 Ting Kok Road, Tai Po, Hong Kong
Manufacture's Name ..... :	**VTech (Dongguan) Electronics Ltd**
Address ..... :	Sam Tuen Management Zone, Hou Jie, Dongguan, Guangdong, China
Product Description	
Product Name..... :	KidiBuzz™ G2
Brand Name ..... :	vtech
Model Name ..... :	1866
Series Model..... :	N/A
Test Standards ..... :	FCC Part 15.407
Test Procedure	905462 D02 UNII DFS Compliance Procedures New Rules v02 905462 D03 UNII Clients Without Radar Detection New Rules v01r02

This device described above has been tested by STS, and the test results show that the equipment under test (EUT) is in compliance with the FCC&IC requirements. And it is applicable only to the tested sample identified in the report.
This report shall not be reproduced except in full, without the written approval of STS, this document only be altered or revised by STS, personal only, and shall be noted in the revision of the document.

Date of Test.....:

Date (s) of performance of tests.....: 08 Mar. 2019 -14 Mar. 2019

Date of Issue.....: 14 Mar. 2019

Test Result.....: **Pass**

Testing Engineer :

(Chris Chen)

Technical Manager :

(Sunday Hu)

Authorized Signatory :

(Vita Li)

Table of Contents

1. SUMMARY OF TEST RESULTS **5**
1.1 TEST FACTORY 5
1.2 MEASUREMENT UNCERTAINTY 5
2. GENERAL INFORMATION **6**
2.1 GENERAL DESCRIPTION OF THE EUT 6
2.2 TEST CONDITIONS AND CHANNEL 8
2.3 DFS MEASUREMENT INSTRUMENTATION 9
2.4 EQUIPMENTS LIST FOR ALL TEST ITEMS 10
3. DFS PARAMETERS **11**
3.1 DFS PARAMETERS 11
3.2 DFS –TEST RESULTS 15

Revision History

Rev.	Issue Date	Report NO.	Effect Page	Contents
00	14 Mar. 2019	STS1903192W03	ALL	Initial Issue

1. SUMMARY OF TEST RESULTS

Test procedures according to the technical standards: KDB 905462 D02 UNII DFS Compliance Procedures New Rules v02 and 905462 D03 UNII Clients Without Radar Detection New Rules v01r02

Part 15.407			
Requirement	Operational Mode		RESULTS
	Master	Client	
Non-Occupancy Period	Yes	Yes	Pass
DFS Detection Threshold	Yes	Not required	Not required
Channel Availability Check Time	Yes	Not required	Not required
Channel Closing Transmission Time	Yes	Yes	Pass
Channel Move Time	Yes	Yes	Pass
U-NII Detection Bandwidth	Yes	Not required	Not required

1.1 TEST FACTORY

Shenzhen STS Test Services Co., Ltd.

Add. : 1/F., Building B, Zhuoke Science Park, No.190, Chongqing Road, Fuyong Street, Bao'an District, Shenzhen, Guangdong, China

FCC Registration No.: CN1203

A2LA Certificate No.: 4338.01

1.2 MEASUREMENT UNCERTAINTY

The reported uncertainty of measurement **y** ± **U**,where expended uncertainty **U** is based on a standard uncertainty multiplied by a coverage factor of **k=2**, providing a level of confidence of approximately **95** %.

No.	Item	Uncertainty
1	DFS Threshold (radiated)	±1.50dB
2	DFS Threshold (conducted)	±1.45dB
7	Temperature	±0.5°C
8	Humidity	±2%

2. GENERAL INFORMATION

2.1 GENERAL DESCRIPTION OF THE EUT

<table>
<tr><td>Product Name</td><td>KidiBuzz™ G2</td></tr>
<tr><td>Brand Name</td><td>vtech</td></tr>
<tr><td>Model Name</td><td>1866</td></tr>
<tr><td>Series Model</td><td>N/A</td></tr>
<tr><td>Model Difference</td><td>N/A</td></tr>
<tr><td>Product Description</td><td>The EUT is a KidiBuzz G2 which supports Wi-Fi 802.11a/b/g/n with DFS wireless technologies. This report for DFS operation only.
<table>
<tr><td>Operation Frequency:</td><td>802.11a/n (HT20):5500 MHz -5700 MHz
802.11a/n (HT40):5510 MHz -5670 MHz</td></tr>
<tr><td>Modulation Type:</td><td>802.11a(OFDM):
BPSK,QPSK,16-QAM,64-QAM
802.11n(OFDM):
BPSK,QPSK,16-QAM,64-QAM</td></tr>
<tr><td>Number Of Channel</td><td>Please see Note 2.</td></tr>
<tr><td>Antenna Gain(Peak)</td><td>0dBi</td></tr>
</table>
Based on the application, features, or specification exhibited in User’s Manual, the EUT is considered as an ITE/Computing Device. More details of EUT technical specification, please refer to the User’s Manual.</td></tr>
<tr><td>Channel List</td><td>Refer to below</td></tr>
<tr><td>Sub-class</td><td>H01</td></tr>
<tr><td>Adapter</td><td>Model: VT00EUS05150 (VTech)
Input: AC100-240V 50/60Hz 0.2A
Output: DC 5V@1500mA</td></tr>
<tr><td>Battery</td><td>Model: SP605062 (VTech)
DC 3.7V@2300mAh/8.51Wh Li-ion battery
Limited charge voltage: N/A</td></tr>
</table>

Note:
1. For a more detailed features description, please refer to the manufacturer’s specifications or the User’s Manual.

2

Channel List for 802.11a/n (HT20)							
Channel	Frequency (MHz)	Channel	Frequency (MHz)	Channel	Frequency (MHz)	Channel	Frequency (MHz)
100	5500	104	5520	108	5540	112	5560
116	5580	120	5600	124	5620	128	5640
132	5660	136	5680	140	5700		

Channel List for 802.11 n (HT40)			
Channel	Frequency (MHz)	Channel	Frequency (MHz)
102	5510	110	5550
134	5670		

3.EQUIPMENT UNDER TEST (EUT) DETAILS
The manufacturer declared values for the EUT operational characteristics that affect DFS are as follows

Operating Modes (5470 – 5725 MHz)

☐ Master Device
☒ Client Device (no In Service Monitoring, no Ad-Hoc mode)
☐ Client Device with In-Service Monitoring

Antenna Gains / EIRP (5470 – 5725 MHz)

	5250 – 5350 MHz		5470 – 5725 MHz	
	5320MHz (HT20)	5310MHz (HT40)	5580MHz (HT20)	5500MHz (HT40)
Lowest Antenna Gain (dBi)	--	--	0	0
Highest Antenna Gain (dBi)	--	--	0	0
DFS Detection Threshold (dBm)	--		-62	

Channel Protocol

☒ IP Based
☐ Frame Based
☐ OTHER_____

The EUT did not require modifications during testing in order to comply with the requirements of the standard(s) referenced in this test report.

2.2 TEST CONDITIONS AND CHANNEL

	Normal Test Conditions
Temperature	15°C – 35°C
Relative Humidity	20% - 75%
Supply Voltage	AC 120V/60Hz

Channel List		
Band Frequency	EUT Channel	Test Frequency (MHz)
Band III	CH116	5580
	CH110	5550

2.3 DFS MEASUREMENT INSTRUMENTATION

a. RADAR GENERATION SYSTEM

An Agilent PSG is used as the radar-generating source. The integral arbitrary waveform generators are programmed using Agilent's "Pulse Building" software and Elliott custom software to produce the required waveforms, with the capability to produce both unmodulated and modulated (FM Chirp) pulses. Where there are multiple values for a specific radar parameter then the software selects a value at random and, for FCC tests, the software verifies that the resulting waveform is truly unique.

With the exception of the hopping waveforms required by the FCC's rules (see below),the radar generator is set to a single frequency within the radar detection bandwidth of the EUT.

Frequency hopping radar waveforms are simulated using a time domain model. A randomly hopping sequence algorithm (which uses each channel in the hopping radar's range once in a hopping sequence) generates a hop sequence. A segment of the first 100 elements of the hop sequence are then examined to determine if it contains one or more frequencies within the radar detection bandwidth of the EUT. If it does not then the first element of the segment is discarded and the next frequency in the sequence is added. The process repeats until a valid segment is produced. The radar system is then programmed to produce bursts at time slots coincident with the frequencies within the segment that fall in the detection bandwidth. The frequency of the generator is stepped in 1 MHz increments across the EUT's detection range.

The radar signal level is verified during testing using a CW signal with the AGC function switched on. Correction factors to account for the fact that pulses are generated with the AGC functions switched off are measured annually and an offset is used to account for this in the software.The generator output is connected to the coupling port of the conducted set-up or to the radar-generating antenna.

b. CHANNEL MONITORING SYSTEM

Channel monitoring is achieved using a spectrum analyzer and digital storage oscilloscope. The analyzer is configured in a zero-span mode, center frequency set to the radar waveform's frequency or the center frequency of the EUT's operating channel. The IF output of the analyzer is connected to one input of the oscilloscope and analyzer.

A signal generator output is set to send either the modulating signal directly or a pulse gate with an output pulse co-incident with each radar pulse. This output is connected to a second input on the oscilloscope and the oscilloscope displays both the channel traffic (via the if input) and the radar pulses on its display.

For in service monitoring tests the analyzer sweep time is set to > 20 seconds and the oscilloscope is configured with a data record length of 10 seconds for the short duration and frequency hopping waveforms, 20 seconds for the long duration waveforms. Both instruments are set for a single acquisition sequence. The analyzer is triggered 500ms before the start of the waveform and the oscilloscope is triggered directly by the modulating pulse train. Timing measurements for aggregate channel transmission time and channel move time are made from the oscilloscope data, with the end of the waveform clearly identified by the pulse train on one trace. The analyzer trace data is used to confirm that the last transmission occurred within the 10-second record of the

oscilloscope. If necessary the record length of the oscilloscope is expanded to capture the last transmission on the channel prior to the channel move.

Channel availability check time timing plots are made using the analyzer. The analyzer is triggered at start of the EUT's channel availability check and used to verify that the EUT does not transmit when radar is applied during the check time.

The analyzer detector and oscilloscope sampling mode is set to peak detect for all plots.

2.4 EQUIPMENTS LIST FOR ALL TEST ITEMS

Kind of Equipment	Manufacturer	Type No.	Serial No.	Last calibration	Calibrated until
Signal Generator	Agilent	N5182A	MY46240556	2018.10.16	2019.10.15
Signal Analyzer	Agilent	N9020A	MY49100060	2018.10.13	2019.10.12
Coupler	Rio tinto in overseas	ZFSC-2-11	15542	2019.05.06	2020.05.05
Coupler	Rio tinto in overseas	ZN2PD-9G	SF078500430	2019.05.06	2020.05.05
Attenuator	HP	8494B	DC-18G	2019.05.06	2020.05.05
Router	TP-LINK (ID:Q87-WRT3200ACM)	TL-WR885N	1125074010735	N.C.R	N.C.R
Temperature & Humidity	HH660	Mieo	N/A	2018.10.11	2019.10.10

3. DFS PARAMETERS

3.1 DFS PARAMETERS

Table 1: Applicability of DFS Requirements Prior to Use of a Channel

Requirement	Operational Mode		
	Master	Client Without Radar Detection	Client With Radar Detection
Non-Occupancy Period	Yes	Not required	Yes
DFS Detection Threshold	Yes	Not required	Yes
Channel Availability Check Time	Yes	Not required	Not required
U-NII Detection Bandwidth	Yes	Not required	Yes

Table 2: Applicability of DFS requirements during normal operation

Requirement	Operational Mode	
	Master Device or Client with Radar Detection	Client Without Radar Detection
DFS Detection Threshold	Yes	Not required
Channel Closing Transmission Time	Yes	Yes
Channel Move Time	Yes	Yes
U-NII Detection Bandwidth	Yes	Not required

Additional requirements for devices with multiple bandwidth modes	Master Device or Client with Radar Detection	Client Without Radar Detection
U-NII Detection Bandwidth and Statistical Performance Check	All BW modes must be tested	Not required
Channel Move Time and Channel Closing Transmission Time	Test using widest BW mode available	Test using the widest BW mode available for the link
All other tests	Any single BW mode	Not required
Note: Frequencies selected for statistical performance check (Section 7.8.4) should include several frequencies within the radar detection bandwidth and frequencies near the edge of the radar detection bandwidth. For 802.11 devices it is suggested to select frequencies in each of the bonded 20 MHz channels and the channel center frequency.		

Table 3: DFS Detection Thresholds for Master Devices and Client Devices With Radar Detection

Maximum Transmit Power	**Value (See Notes 1, 2, and 3)**
EIRP ≥ 200 milliwatt	-64 dBm
EIRP < 200 milliwatt and power spectral density < 10 dBm/MHz	-62 dBm
EIRP < 200 milliwatt that do not meet the power spectral density requirement	-64 dBm
Note 1: This is the level at the input of the receiver assuming a 0 dBi receive antenna. **Note 2:** Throughout these test procedures an additional 1 dB has been added to the amplitude of the test transmission waveforms to account for variations in measurement equipment. This will ensure that the test signal is at or above the detection threshold level to trigger a DFS response. **Note3:** EIRP is based on the highest antenna gain. For MIMO devices refer to KDB Publication 662911 D01.	

Table 4: DFS Response Requirement Values

Parameter	**Value**
Non-occupancy period	Minimum 30 minutes
Channel Availability Check Time	60 seconds
Channel Move Time	10 seconds See Note 1.
Channel Closing Transmission Time	200 milliseconds + an aggregate of 60 milliseconds over remaining 10 second period. See Notes 1 and 2.
U-NII Detection Bandwidth	Minimum 100% of the U-NII 99% transmission power bandwidth. See Note 3.
Note 1: *Channel Move Time* and the *Channel Closing Transmission Time* should be performed with Radar Type 0. The measurement timing begins at the end of the Radar Type 0 burst. **Note 2:** The *Channel Closing Transmission Time* is comprised of 200 milliseconds starting at the beginning of the *Channel Move Time* plus any additional intermittent control signals required to facilitate a *Channel* move (an aggregate of 60 milliseconds) during the remainder of the 10 second period. The aggregate duration of control signals will not count quiet periods in between transmissions. **Note 3:** During the *U-NII Detection Bandwidth* detection test, radar type 0 should be used. For each frequency step the minimum percentage of detection is 90 percent. Measurements are performed with no data traffic.	

Table 5 – Short Pulse Radar Test Waveforms

Radar Type	Pulse Width (µsec)	PRI (µsec)	Number of Pulses	Minimum Percentage of Successful Detection	Minimum Number of Trials
0	1	1428	18	See Note 1	See Note 1
1	1	Test A: 15 unique PRI values randomly selected from the list of 23 PRI values in Table 5a	$\text{Roundup}\left\{\left(\frac{1}{360}\right)\cdot\left(\frac{19\cdot 10^6}{\text{PRI}_{\mu sec}}\right)\right\}$	60%	30
		Test B: 15 unique PRI values randomly selected within the range of 518-3066 µsec, with a minimum increment of 1 µsec, excluding PRI values selected in Test A			
2	1-5	150-230	23-29	60%	30
3	6-10	200-500	16-18	60%	30
4	11-20	200-500	12-16	60%	30
Aggregate (Radar Types 1-4)				80%	120
Note 1: Short Pulse Radar Type 0 should be used for the detection bandwidth test, channel move time, and channel closing time tests.					

Table 5a - Pulse Repetition Intervals Values for Test A

Pulse Repetition Frequency Number	Pulse Repetition Frequency (Pulses Per Second)	Pulse Repetition Interval (Microseconds)
1	1930.5	518
2	1858.7	538
3	1792.1	558
4	1730.1	578
5	1672.2	598
6	1618.1	618
7	1567.4	638
8	1519.8	658
9	1474.9	678
10	1432.7	698
11	1392.8	718
12	1355	738
13	1319.3	758
14	1285.3	778
15	1253.1	798
16	1222.5	818
17	1193.3	838
18	1165.6	858
19	1139	878
20	1113.6	898
21	1089.3	918
22	1066.1	938
23	326.2	3066

The aggregate is the average of the percentage of successful detections of Short Pulse Radar Types 1-4. For example, the following table indicates how to compute the aggregate of percentage of successful detections.

Radar Type	Number of Trials	Number of Successful Detections	Minimum Percentage of Successful Detection
1	35	29	82.9%
2	30	18	60%
3	30	27	90%
4	50	44	88%
Aggregate (82.9% + 60% + 90% + 88%)/4 = 80.2%			

Long Pulse Radar Test Waveform

Table 6 – Long Pulse Radar Test Waveform

Radar Type	Pulse Width (µsec)	Chirp Width (MHz)	PRI (µsec)	Number of Pulses per *Burst*	Number of *Bursts*	Minimum Percentage of Successful Detection	Minimum Number of Trials
5	50-100	5-20	1000-2000	1-3	8-20	80%	30

Figure 1 provides a graphical representation of the Long Pulse Radar Test Waveform.

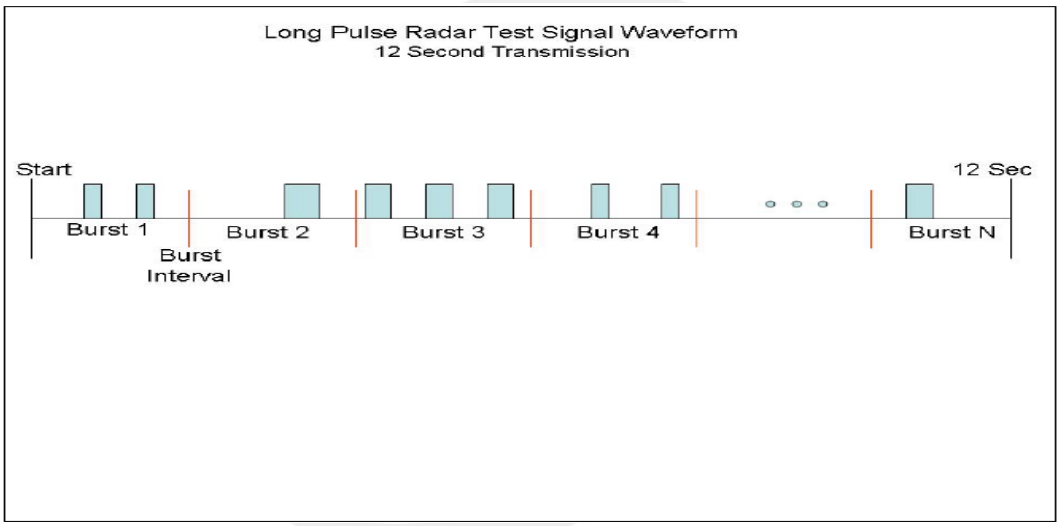

Table 7 – Frequency Hopping Radar Test Waveform

Radar Type	Pulse Width (µsec)	PRI (µsec)	Pulses per Hop	Hopping Rate (kHz)	Hopping Sequence Length (msec)	Minimum Percentage of Successful Detection	Minimum Number of Trials
6	1	333	9	0.333	300	70%	30

3.2 DFS –TEST RESULTS

3.2.1 TEST RESULTS– FCC Part 15.407 CLIENT DEVICE

Shutdown Time

Mode	Frequency (MHz)	Channel Move Time (s)	Limit Channel Move Time (s)	Close Transmission Time (s)	Limit Close Transmission Time (s)	Verdict
n40	5550	1.2737	10	0.0192	0.26	Pass
a	5580	1.2468	10	0.0264	0.26	Pass

Notes:
1) Tests were performed using the conduction test method.
2) Channel availability check, detection threshold and non-occupancy period are not applicable to client devices.

3.2.2 DFS MEASUREMENT METHODS

a. DFS – CHANNEL CLOSING TRANSMISSION TIME AND CHANNEL MOVE TIME

Channel Move Time and the Channel Closing Transmission Time should be performed with Radar Type 0. The measurement timing begins at the end of the Radar Type 0 burst.
The Channel Closing Transmission Time is comprised of 200 milliseconds starting at the beginning of the Channel Move Time plus any additional intermittent control signals required to facilitate a Channel move (an aggregate of 60 milliseconds) during the remainder of the 10 second period. The aggregate duration of control signals will not count quiet periods in between transmissions.

b. DFS – CHANNEL NON-OCCUPANCY AND VERIFICATION OF PASSIVE SCANNING

Non-occupancy Period. A channel that has been flagged as containing a radar system, either by a channel availability check or in-service monitoring, is subject to a non-occupancy period of at least 30 minutes. The non-occupancy period starts at the time when the radar system is detected.

c. CHANNEL AVAILABILITY CHECK TIME

Channel Availability Check Time. A U-NII device shall check if there is a radar system already operating on the channel before it can initiate a transmission on a channel and when it has to move to a new channel. The U-NII device may start using the channel if no radar signal with a power level greater than the interference threshold values listed in paragraph (h)(2) of this section, is detected within 60 seconds.

d. CONTROL (TPC)

Compliance with the transmit power control requirements for devices is demonstrated through measurements showing multiple power levels and manufacturer statements explaining how the power control is implemented.

e. DETECTION PROBABILITY / SUCCESS RATE

During the U-NII Detection Bandwidth detection test, radar type 0 should be used. For each frequency step the minimum percentage of detection is 90 percent. Measurements are performed with no data traffic. Minimum 100% of the U-NII 99% transmission power bandwidth.

f. NON- OCCUPANCY PERIOD

During the 30 minutes observation time, UUT did not make any transmissions on a channel after a radar signal was detected on that channel by either the Channel Availability Check or the In-Service Monitoring

3.2.3 DFS CONDUCTION TEST METHOD

a. The signal level of the simulated waveform is set to a reference level equal to the threshold level (plus 1dB if testing against FCC requirements). Lower levels may also be applied on request of the manufacturer.
The signal level is verified by measuring the CW signal level at the coupling point to the RDD antenna port. The radar signal level is calculated from the measured level, R (dBm) and the lowest gain antenna assembly intended for use with the RDD
If both master and client devices have radar detection capability then the radar level at the non RDD is verified to be at least 20dB below the threshold level to ensure that any responses are due to the RDD detecting radar.
The antenna connected to the channel monitoring subsystem is positioned to allow both master and client transmissions to be observed, with the level of the EUT's transmissions between 6 and 10dB higher than those from the other device.

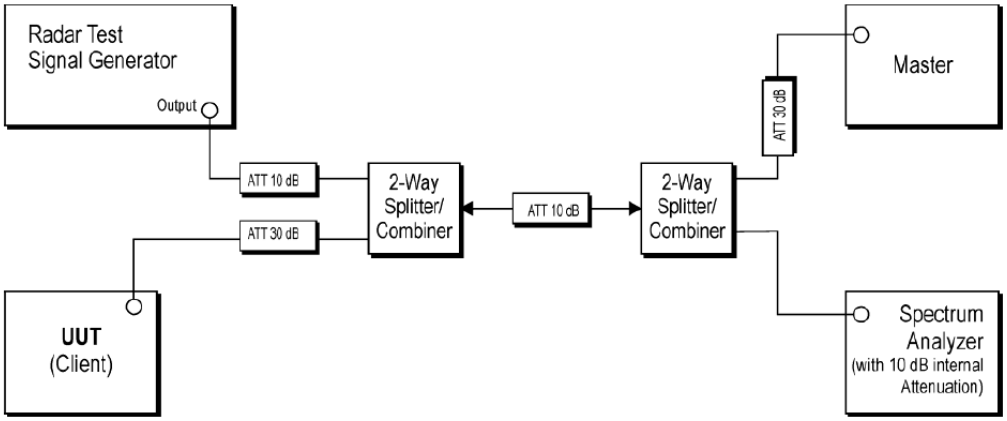

b. *Set-up B* is a set-up whereby the UUT is an RLAN device operating in slave mode, with or without Radar Interference Detection function. This set-up also contains an RLAN device operating in master mode. The radar test signals are injected into the master device. The UUT (slave device)is associated with the master device. Figure 5 shows an example for *Set-up B*. The set-up used shall be documented in the test report.

3.2.4 DFS Test Data

Shutdown Time

5550MHz n40 Shutdown

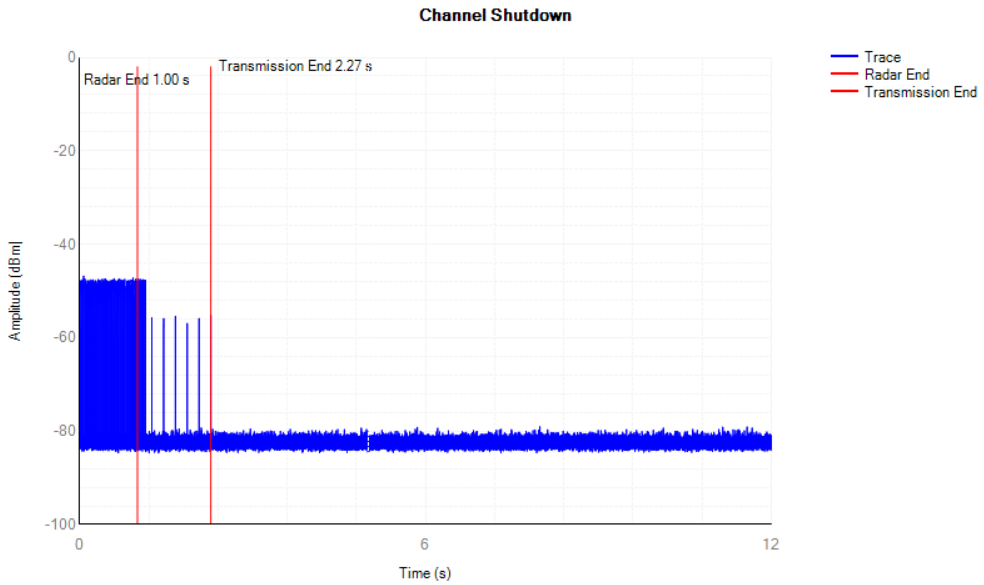

5580MHz a Shutdown

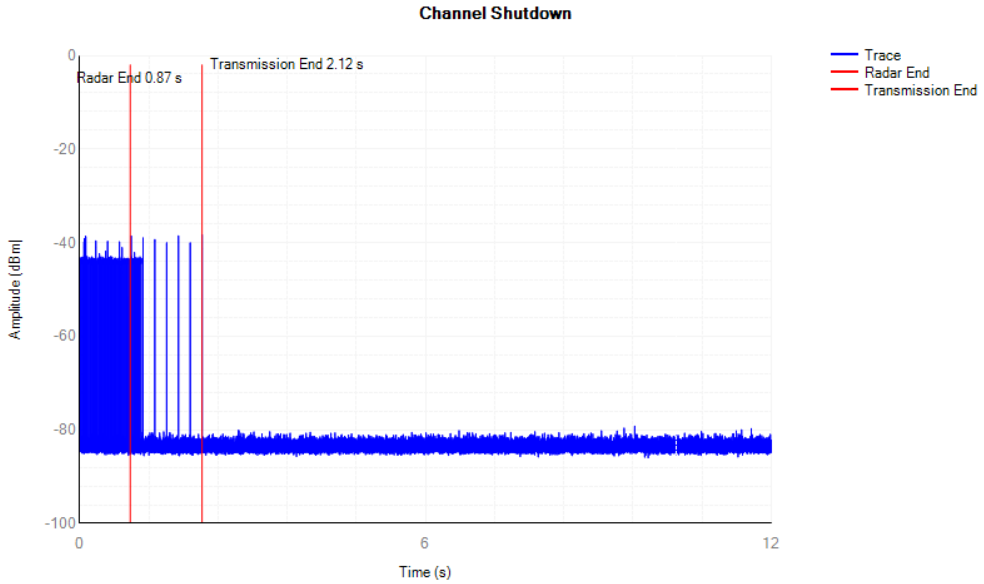

Non-Occupancy

5550MHz n40 Non-Occupancy

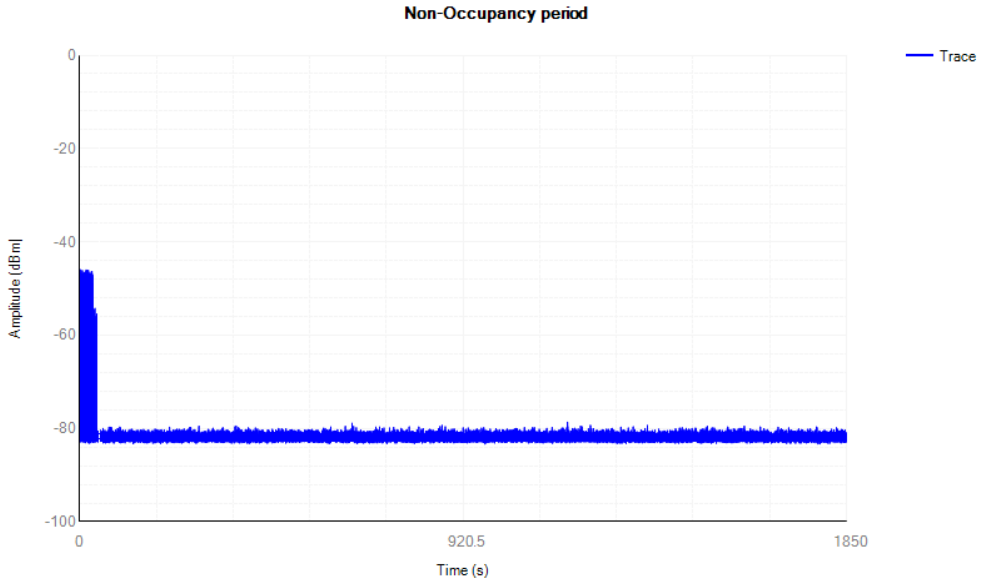
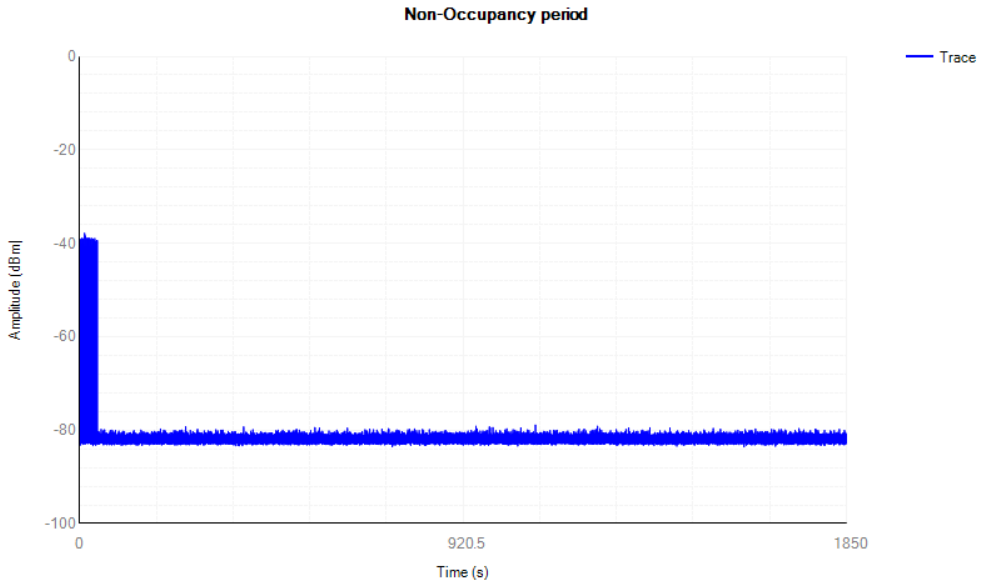
5580MHz a Non-Occupancy