PROJECT MIRAGE-2000

PAGE DESCRIPTION

PAGE 1 : THIS PAGE
PAGE 2 : CLK GENERATOR , D/D & CHARGER CONNECTOR
PAGE 3 : INTEL MOBILE MODULE (IMM)
PAGE 4 : 144 PIN SO-DIMM
PAGE 5 : PCI SOUTH BRIDGE -- PIIX4(PIIX4E)
PAGE 6 : HDD CONN , CD-ROM & DVD-ROM SWAP BAY , FDD & LS-120 SWAP BAY
PAGE 7 : SYSTEM DAMPING ,PULL-UP & PULL-LOW RESITORS
PAGE 8 : NEO-MAGIC NMG4-2160 VGA CONTROLLER
PAGE 9 : LCD INTERFACE (LVDS) & INVERTER CONN.
PAGE 10 : CRT RC FILTER & DIGITAL TV ENCODER CH7003/4
PAGE 11 : VIDEO IN & ZV PORT SWITCH
PAGE 12 : PCMCIA (1)--02-6833 CARDBUS CONTROLLER
PAGE 13 : PCMCIA (2)--CARD POWER CONTROLLER MIC2563A & CARD SOCKETS
PAGE 14 : NS97338 SUPER I/O
PAGE 15 : SERIAL,PARALLEL,PS2 PORT
PAGE 16 : K/B CONTROLLER M38867
PAGE 17 : MICRO PROCESSOR
PAGE 18 : SYSTEM BIOS,80 PORT & MSC.
PAGE 19 : PCI AUDIO MAESTRO-2
PAGE 20 : DVD, MODEM, REPLICATOR CONN.
PAGE 21 : POWER GOOD & SUSPEND LOGIC & MSC.
PAGE 22 : IR MODULE
PAGE 23 : USB,BATTERY CONN.
PAGE 24 : BYPASS CAPs


```
!LINK
!MAR-02.SCH
!MAR-03.SCH
!MAR-04.SCH
!MAR-05.SCH
!MAR-06.SCH
!MAR-07.SCH
!MAR-08.SCH
!MAR-09.SCH
!MAR-10.SCH
!MAR-11.SCH
!MAR-12.SCH
!MAR-13.SCH
!MAR-14.SCH
!MAR-15.SCH
!MAR-16.SCH
!MAR-17.SCH
!MAR-18.SCH
!MAR-19.SCH
!MAR-20.SCH
!MAR-21.SCH
!MAR-22.SCH
!MAR-23.SCH
!MAR-24.SCH
```

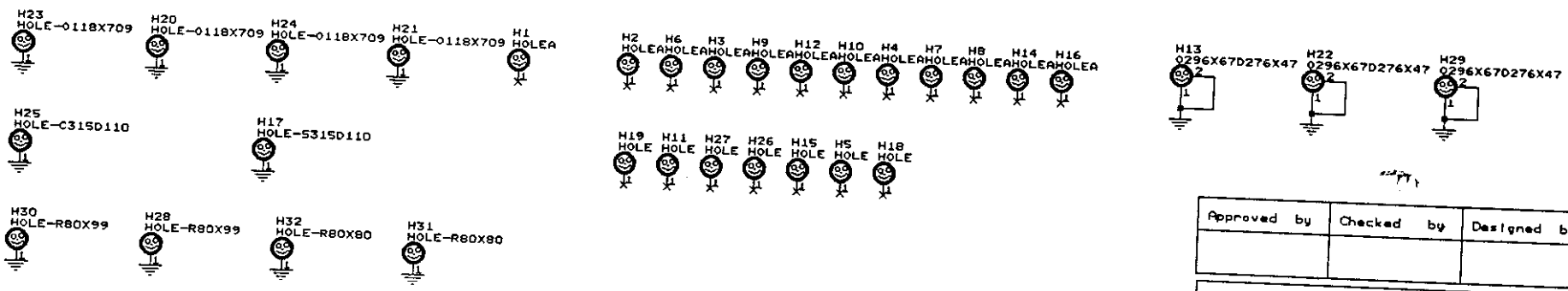

Approved by	Checked by	Designed by

DUAL GROUP

Title: PAGE DESCRIPTION

Size: B | Document Number | REV 04

Date: August 24, 1998 | Sheet 1 of 24

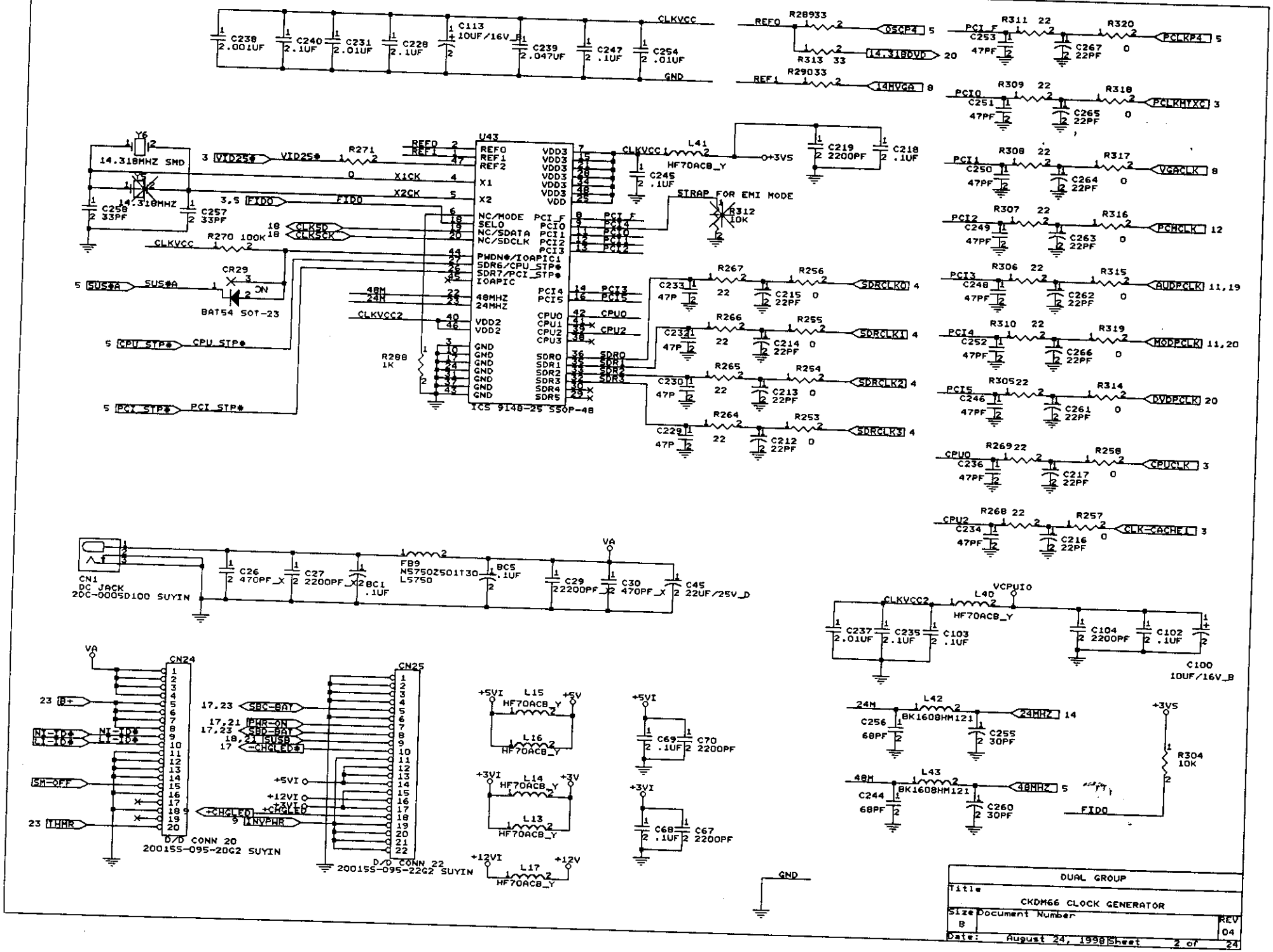
C238 2.001UF
C240 2.1UF
C231 2.01UF
C228 2.1UF
C113 10UF/16V_B
C239 2.047UF
C247 .1UF
C254 .01UF
CLKVCC
GND
REF0
R28933
OSCP4
R313 33
14.318DVD
REF1
R29033
14MVGA
PCI_F
R311 22
R320
C253 47PF
C267 22PF
PCLKP4
PCI0
R309 22
R318
C251 47PF
C265 22PF
PCLKMYXC
PCI1
R308 22
R317
C250 47PF
C264 22PF
VGACLK
PCI2
R307 22
R316
C249 47PF
C263 22PF
PCMCLK
PCI3
R306 22
R315
C248 47PF
C262 22PF
AUDPCLK
PCI4
R310 22
R319
C252 47PF
C266 22PF
MODPCLK
PCI5
R30522
R314
C246 47PF
C261 22PF
DVDPCLK
CPU0
R26922
R258
C236 47PF
C217 22PF
CPUCLK
CPU2
R268 22
R257
C234 47PF
C216 22PF
CLK-CACHE1
Y6
14.318MHZ SMD
Y5
14.318MHZ
C258 33PF
C257 33PF
VID25#
R271
X1CK
X2CK
FIDO
CLKCVC
R270 100K
CLKCVC
CR29
ON
BAT54 SOT-23
SUS#A
CPU_STP#
PCI_STP#
R288 1K
U43
REF0
REF1
REF2
X1
X2
NC/MODE
SELO
NC/SDATA
NC/SDCLK
PWDN#/IOAPIC1
SDR6/CPU_STP#
SDR7/PCI_STP#
IOAPIC
48MHZ
24MHZ
VDD2
GND
VDD3
VDD
PCI0
PCI1
PCI2
PCI3
PCI4
PCI5
CPU0
CPU1
CPU2
CPU3
SDR0
SDR1
SDR2
SDR3
SDR4
SDR5
ICS 9148-25 SSOP-48
CLKCVC
L41
HF70ACB_Y
+3VS
C219 2200PF
C218 .1UF
C245 .1UF
STRAP FOR EMI MODE
R312 10K
R267
R256
C233 47P
C215 22PF
SDRCLK0
R266
R255
C232 47P
C214 22PF
SDRCLK1
R265
R254
C230 47P
C213 22PF
SDRCLK2
R264
R253
C229 47P
C212 22PF
SDRCLK3
CN1
DC JACK
2DC-0005D100 SUYIN
C26 470PF_X
C27 2200PF_X
BC1 .1UF
FB9
NS750Z501T30
L5750
BC5 .1UF
C29 2200PF
VA
C30 470PF_X
C45 22UF/25V_D
CLKVCC2
L40
VCPUIO
HF70ACB_Y
C237 2.01UF
C235 2.1UF
C103 .1UF
C104 2200PF
C102 .1UF
C100 10UF/16V_B
CN24
B+
NI-ID#
LI-ID#
SM-OFF
THMR
D/D CONN 20
20015S-095-20G2 SUYIN
CN25
SBC-BAT
PWR-ON
SBD-BAT
SUSB
-CHGLED#
+5VI
+12VI
+3VI
+CHGLED
NVPWR
D/D CONN 22
20015S-095-22G2 SUYIN
L15
HF70ACB_Y
+5V
L16
HF70ACB_Y
L14
HF70ACB_Y
+3V
L13
HF70ACB_Y
L17
HF70ACB_Y
+12V
C69 .1UF
C70 2200PF
C68 .1UF
C67 2200PF
24M
L42
BK1608HM121
24MHZ
C256 68PF
C255 30PF
48M
L43
BK1608HM121
48MHZ
C244 68PF
C260 30PF
R304 10K
FIDO
GND
DUAL GROUP
Title
CKDM66 CLOCK GENERATOR
Size B
Document Number
REV 04
Date: August 24, 1998
Sheet 2 of 24

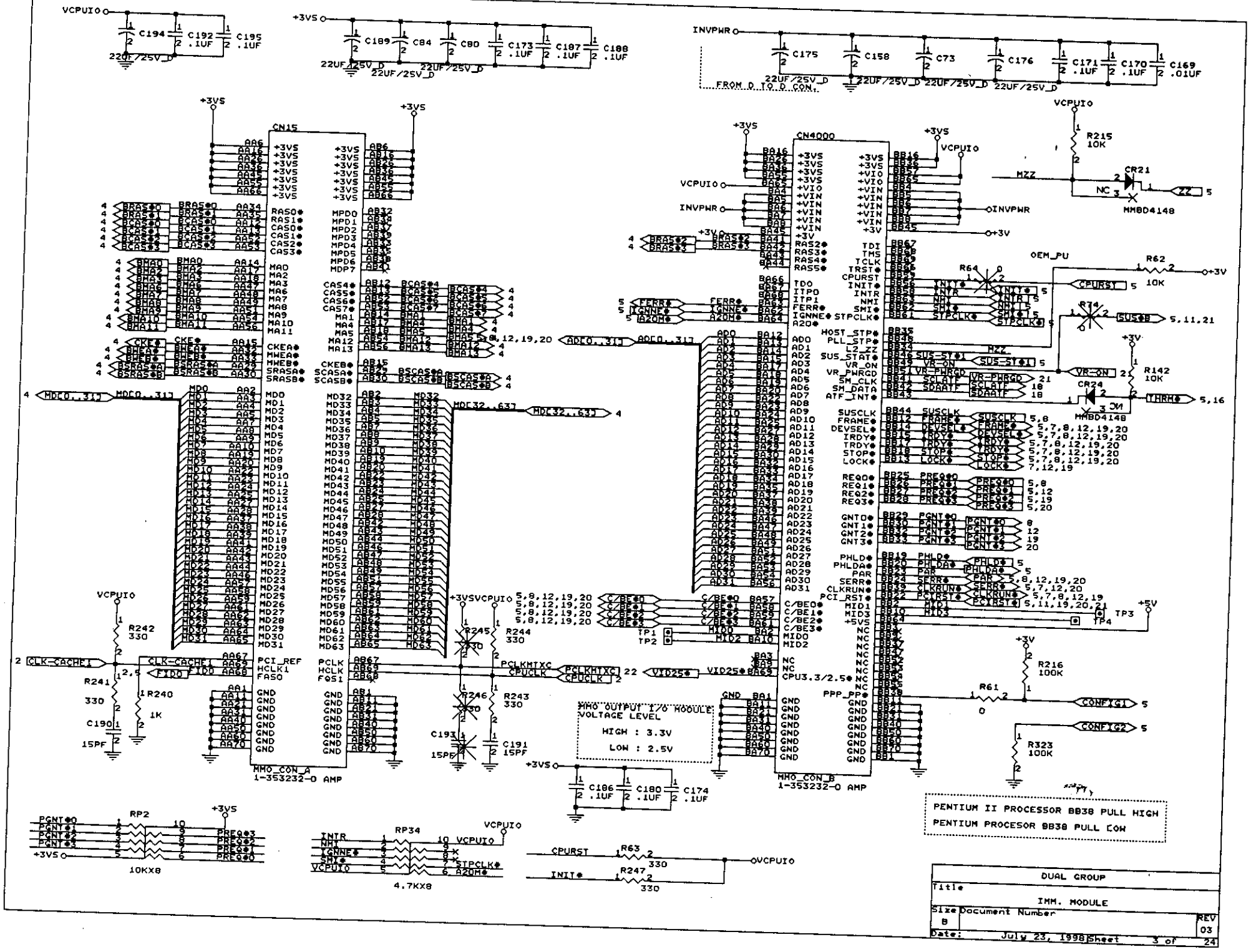
VCPUIO
C194 22UF/25V_D
C192 .1UF
C195 .1UF
+3VS
C189 22UF/25V_D
C84 22UF/25V_D
C80 22UF/25V_D
C173 .1UF
C187 .1UF
C188 .1UF
INVPWR
C175 22UF/25V_D
C158 22UF/25V_D
C73 22UF/25V_D
C176 22UF/25V_D
C171 .1UF
C170 .1UF
C169 .01UF
FROM D TO D CON.
CN15
MMO_CON_A
1-353232-0 AMP
CN4000
MMO_CON_B
1-353232-0 AMP
MDC0..31
MDC32..63
ADC0..31
CLK_CACHE1
FIDO
PCLKMTXC
CPUCLK
VID25#
CPU3.3/2.5#
PCI_REF
HCLK1
FSO1
PCLK
HCLK
C/BE#0
C/BE#1
C/BE#2
C/BE#3
MID0
MID1
MID2
MID3
R215 10K
CR21
NC
MMBD4148
MZZ
ZZ
OEM_PU
R62 10K
R64
CPURST
R74
SUS#B
R142 10K
VR-ON
CR24
THRM#
R241 330
R240 1K
C190 15PF
R242 330
R245 330
R244 330
R246 330
R243 330
C193 15PF
C191 15PF
R61 0
R216 100K
CONFIG1
R323 100K
CONFIG2
TP1
TP2
TP3
TP4
MMO OUTPUT I/O MODULE
VOLTAGE LEVEL
HIGH : 3.3V
LOW : 2.5V
C186 .1UF
C180 .1UF
C174 .1UF
RP2 10KX8
RP34 4.7KX8
R63 330
R247 330
PENTIUM II PROCESSOR BB38 PULL HIGH
PENTIUM PROCESOR BB38 PULL LOW
DUAL GROUP
Title
IMM. MODULE
Size B
Document Number
REV 03
Date: July 23, 1998
Sheet 3 of 24

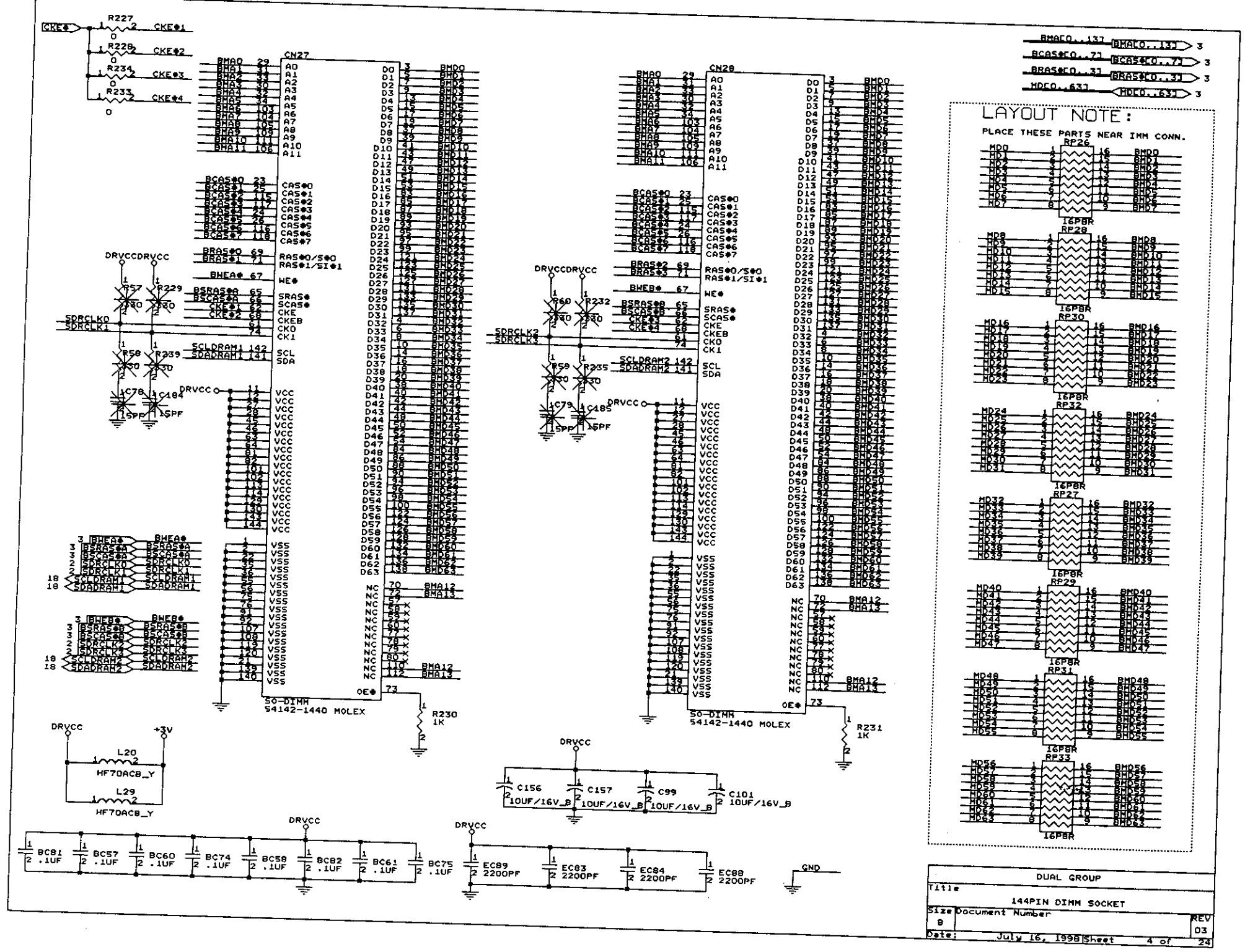
CN27
CN28
50-DIMM
54142-1440 MOLEX
LAYOUT NOTE:
PLACE THESE PARTS NEAR IMM CONN.
DUAL GROUP
144PIN DIMM SOCKET
Size B
Document Number
REV 03
Date: July 16, 1998
Sheet 4 of 24

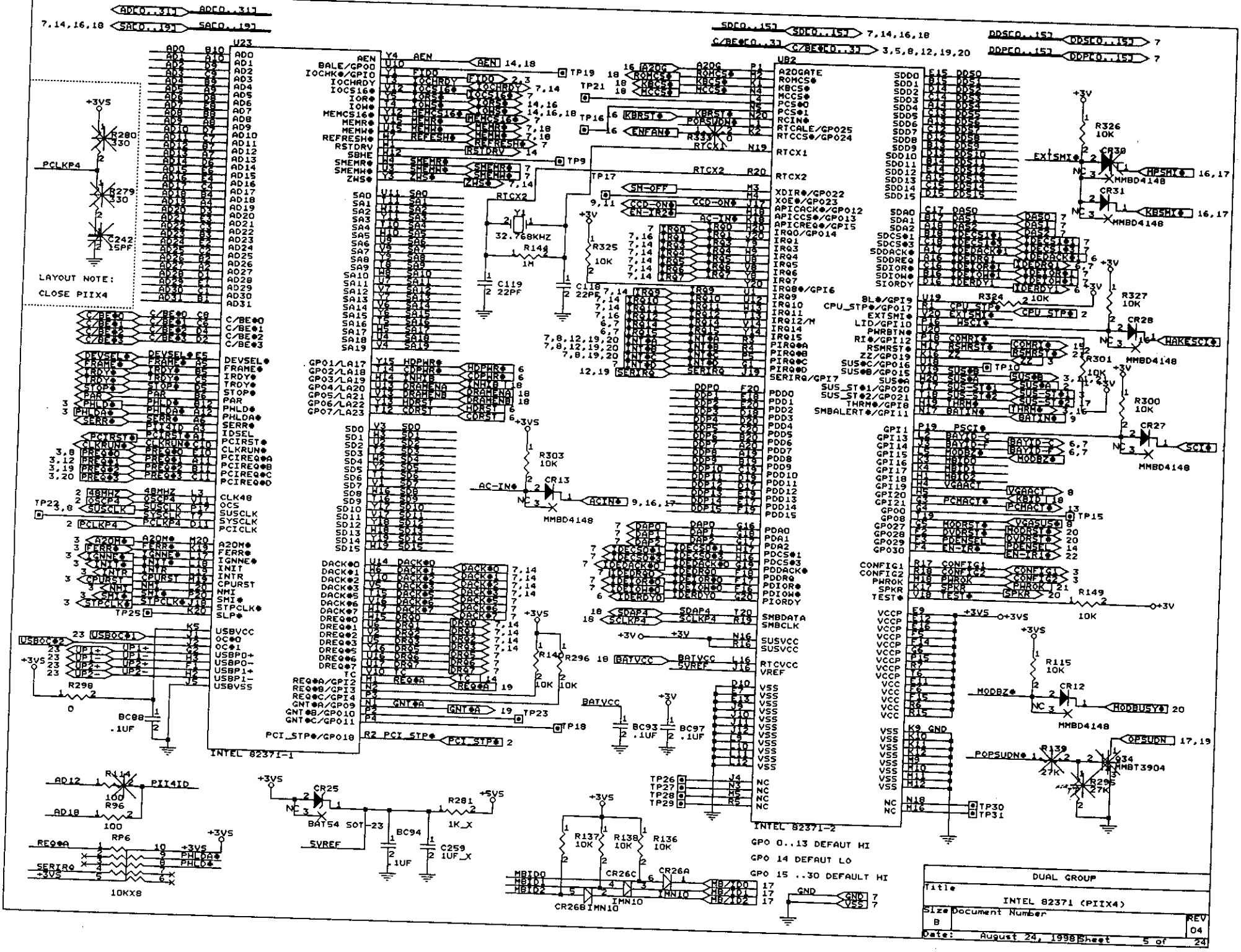
U23
INTEL 82371-1
U82
INTEL 82371-2
LAYOUT NOTE:
CLOSE PIIX4
GPO 0..13 DEFAUT HI
GPO 14 DEFAUT LO
GPO 15 ..30 DEFAULT HI
DUAL GROUP
Title
INTEL 82371 (PIIX4)
Size
B
Document Number
REV
04
Date: August 24, 1998
Sheet 5 of 24

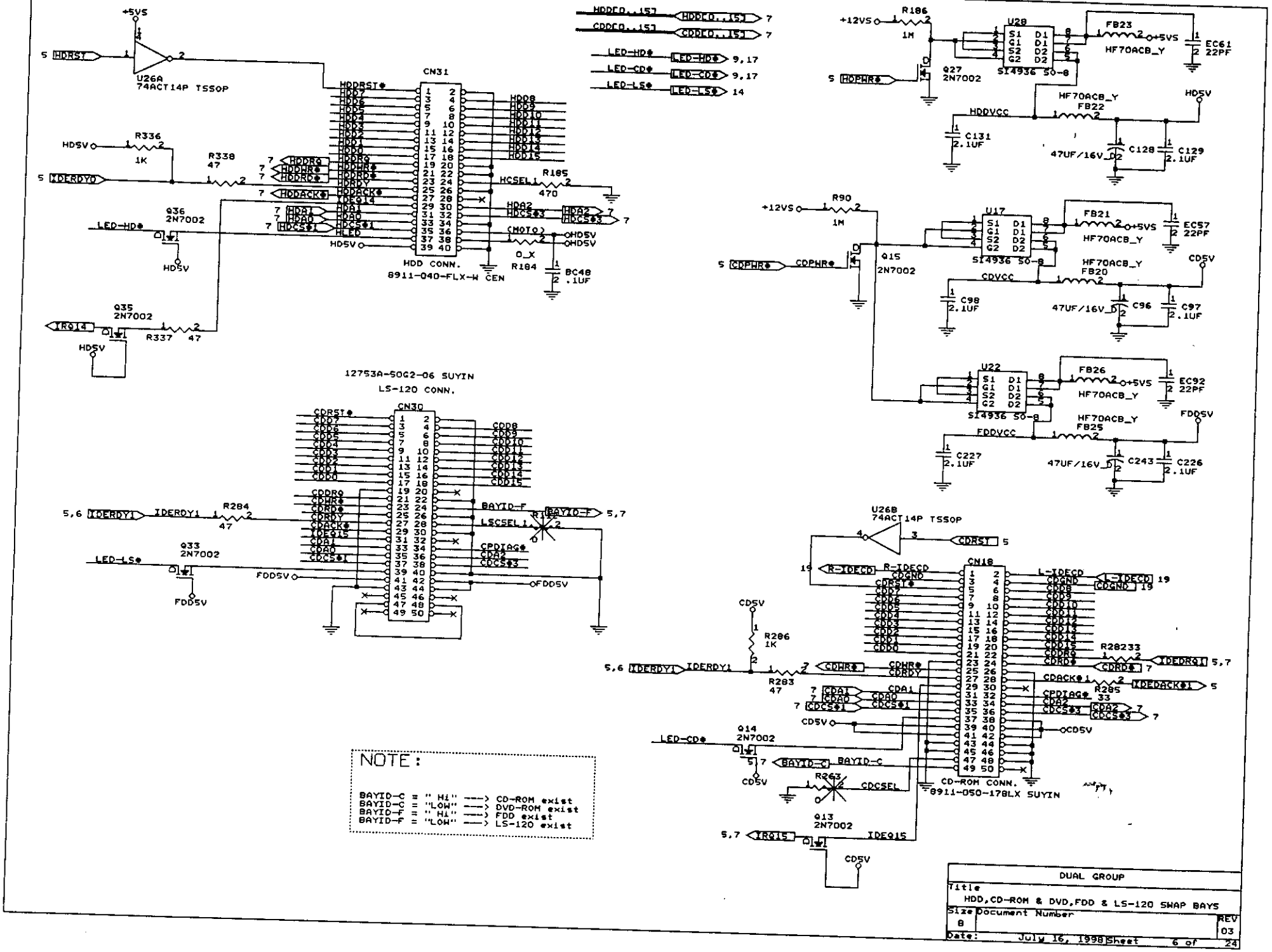
U26A
74ACT14P TSSOP
CN31
HDD CONN.
8911-040-FLX-W CEN
12753A-50G2-06 SUYIN
LS-120 CONN.
CN30
U26B
74ACT14P TSSOP
CN18
CD-ROM CONN.
8911-050-178LX SUYIN
U28
SI4936 SO-8
U17
SI4936 SO-8
U22
SI4936 SO-8
NOTE:
BAYID-C = " Hi" ---> CD-ROM exist
BAYID-C = "LOW" ---> DVD-ROM exist
BAYID-F = " Hi" ---> FDD exist
BAYID-F = "LOW" ---> LS-120 exist
DUAL GROUP
Title
HDD,CD-ROM & DVD,FDD & LS-120 SWAP BAYS
Size B
Document Number
REV 03
Date: July 16, 1998
Sheet 6 of 24

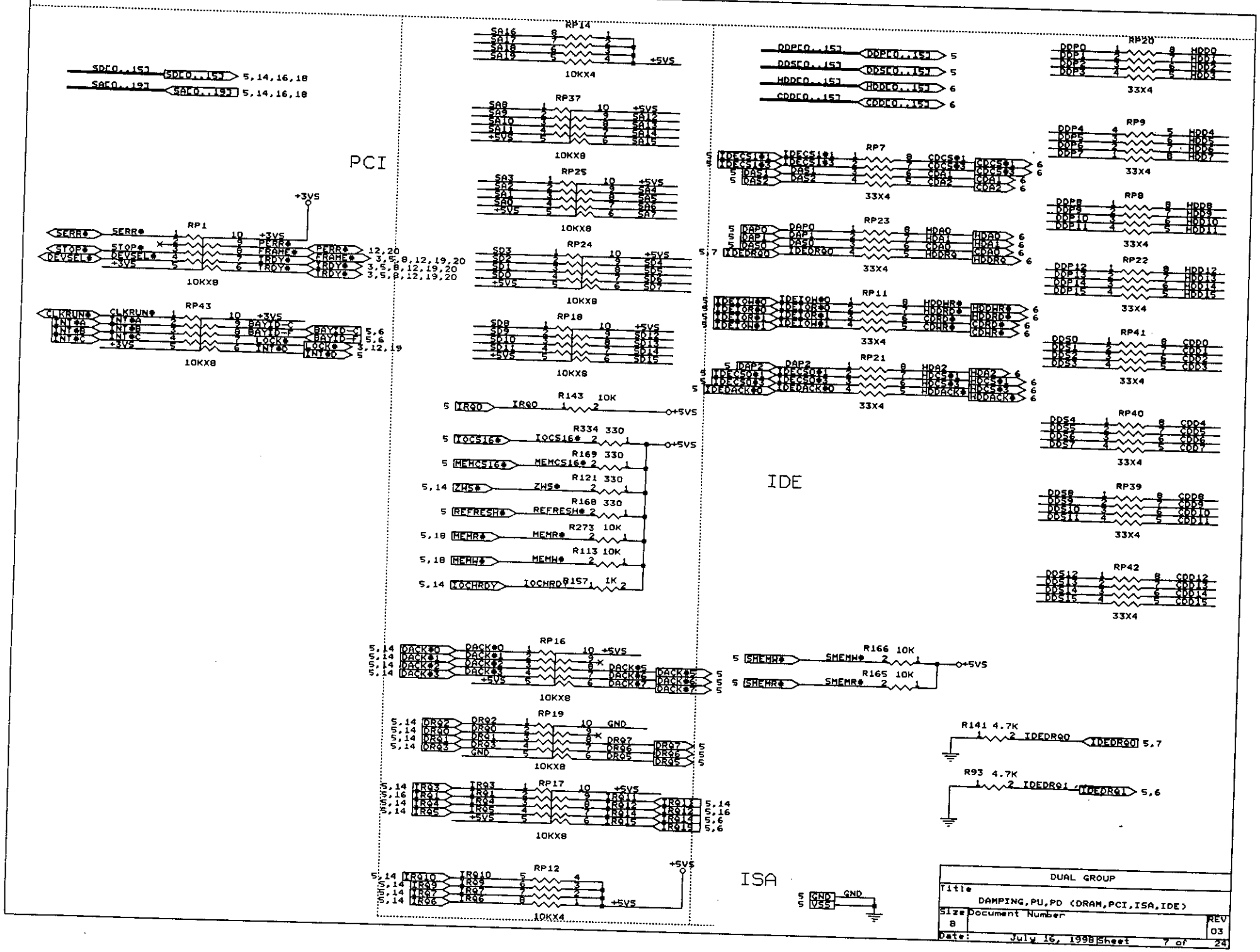
PCI
IDE
ISA
RP1
RP43
RP14
RP37
RP25
RP24
RP18
RP16
RP19
RP17
RP12
RP7
RP23
RP11
RP21
RP20
RP9
RP8
RP22
RP41
RP40
RP39
RP42
R143 10K
R334 330
R169 330
R121 330
R168 330
R273 10K
R113 10K
R157 1K
R166 10K
R165 10K
R141 4.7K
R93 4.7K
+3VS
+5VS
GND
DUAL GROUP
Title
DAMPING,PU,PD (DRAM,PCI,ISA,IDE)
Size
B
Document Number
REV
03
Date: July 16, 1998
Sheet 7 of 24

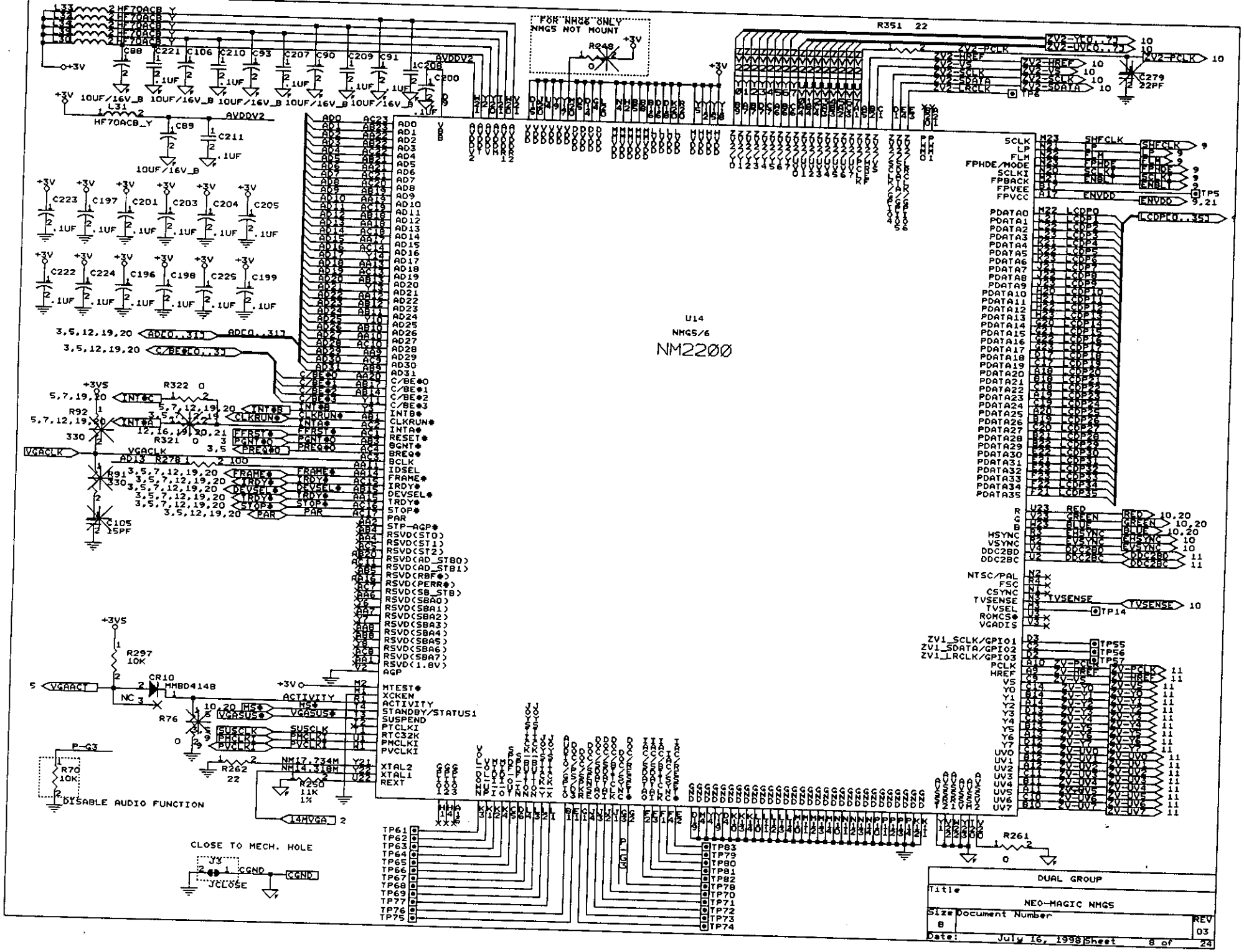
U14
NMG5/6
NM2200
FOR NM26 ONLY
NMG5 NOT MOUNT
DISABLE AUDIO FUNCTION
CLOSE TO MECH. HOLE
DUAL GROUP
Title
NEO-MAGIC NMG5
Size
B
Document Number
REV
03
Date: July 16, 1998
Sheet 8 of 24

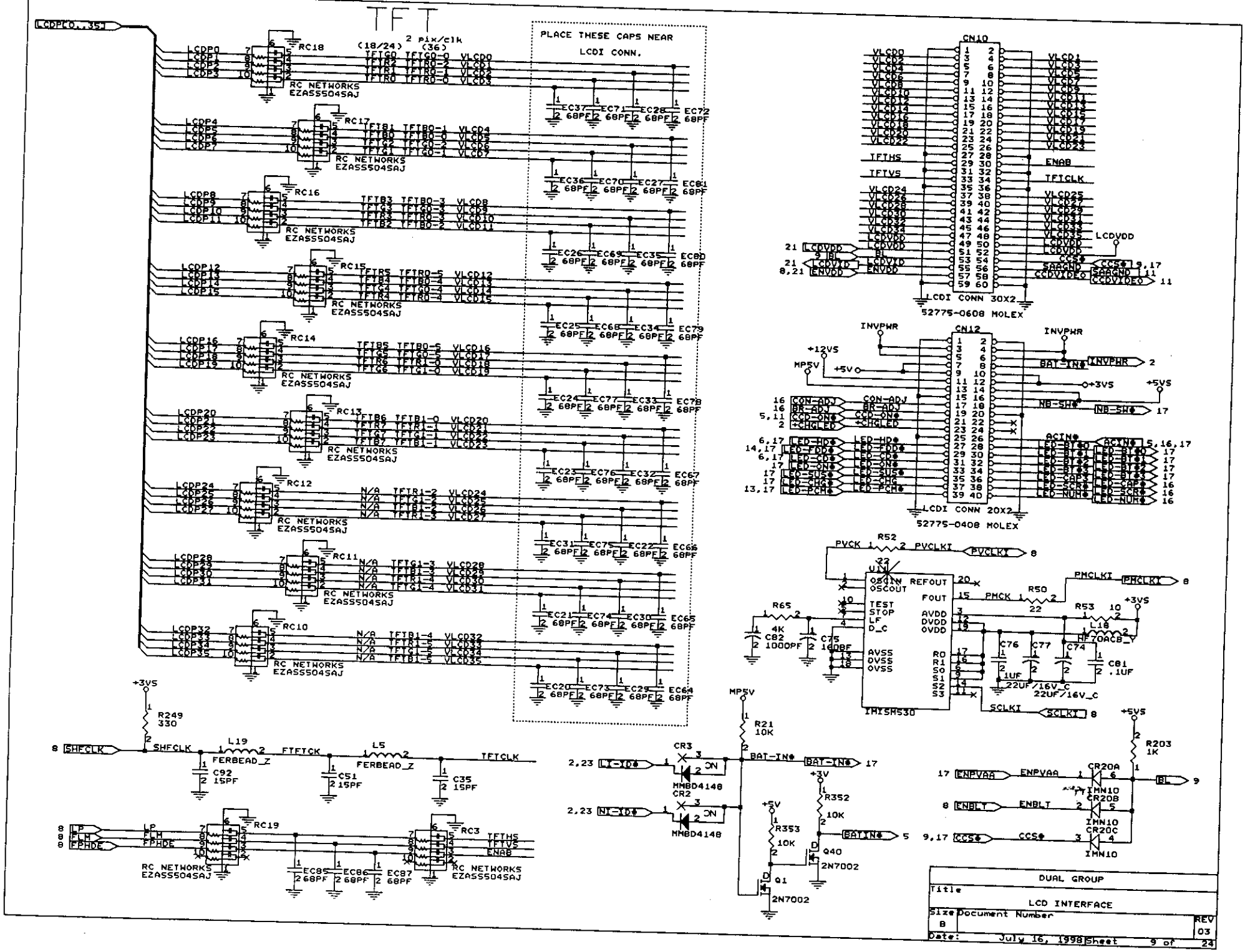
TFT
2 pix/clk
(18/24) (36)
PLACE THESE CAPS NEAR LCDI CONN.
LCDPC0..35
RC NETWORKS EZAS5504SAJ
CN10
LCDI CONN 30X2
52775-0608 MOLEX
CN12
LCDI CONN 20X2
52775-0408 MOLEX
IMISM530
MMBD4148
2N7002
DUAL GROUP
Title
LCD INTERFACE
Size B
Document Number
REV 03
Date: July 16, 1998
Sheet 9 of 24

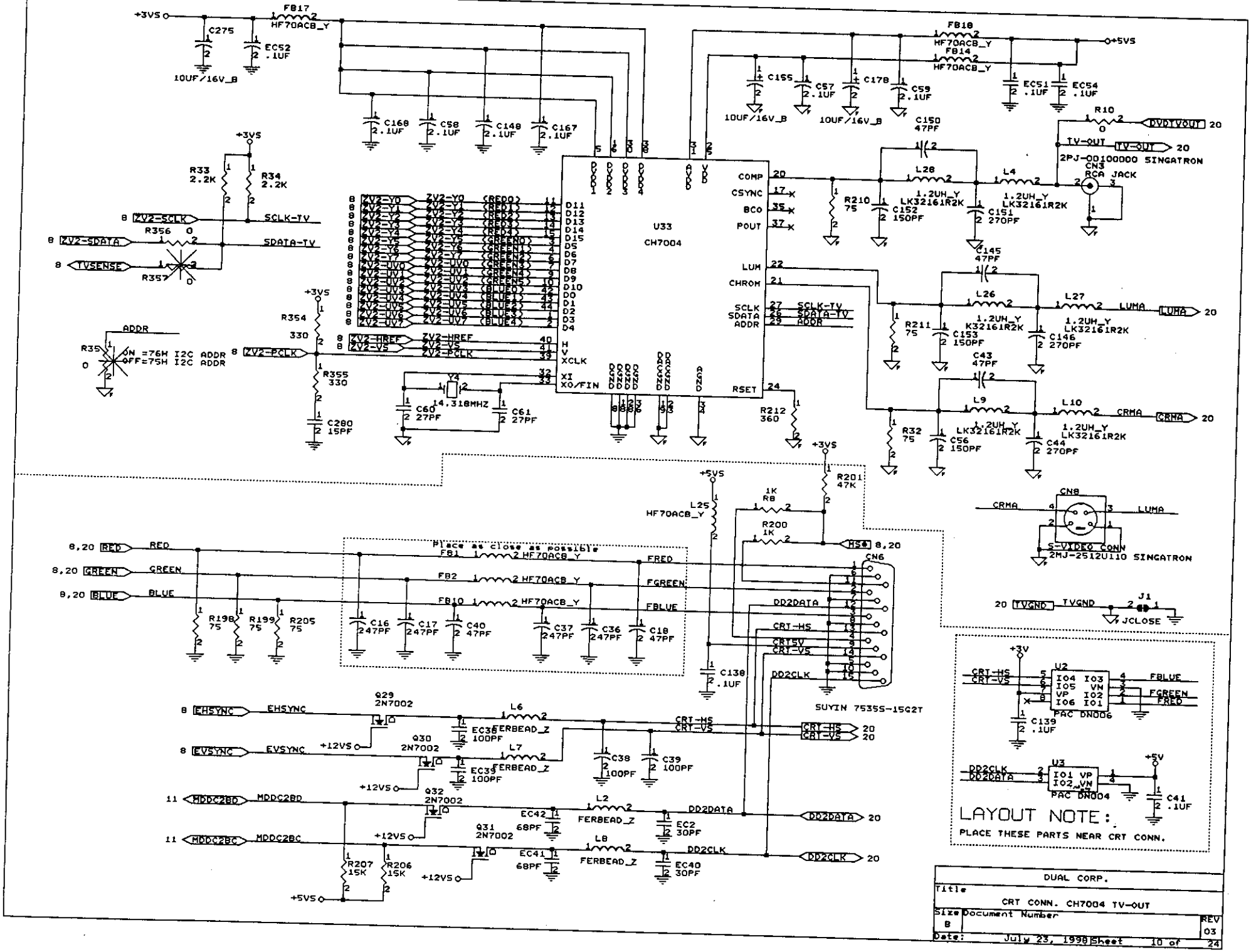
U33
CH7004
COMP
CSYNC
BCO
POUT
LUM
CHROM
SCLK
SDATA
ADDR
RSET
XCLK
XI
XO/FIN
H
V
D11
D12
D13
D14
D15
D5
D6
D7
D8
D9
D10
D0
D1
D2
D3
D4
ZV2-Y0
ZV2-Y1
ZV2-Y2
ZV2-Y3
ZV2-Y4
ZV2-Y5
ZV2-Y6
ZV2-Y7
ZV2-UV0
ZV2-UV1
ZV2-UV2
ZV2-UV3
ZV2-UV4
ZV2-UV5
ZV2-UV6
ZV2-UV7
ZV2-HREF
ZV2-VS
ZV2-PCLK
ZV2-SCLK
ZV2-SDATA
TVSENSE
SCLK-TV
SDATA-TV
ADDR
ON =76H I2C ADDR
OFF=75H I2C ADDR
14.318MHZ
Y4
C60 27PF
C61 27PF
C280 15PF
R354 330
R355 330
R356 0
R357 0
R33 2.2K
R34 2.2K
R35 0
+3VS
+5VS
+12VS
+3V
C275 10UF/16V_B
EC52 .1UF
FB17 HF70ACB_Y
C168 2.1UF
C58 2.1UF
C148 2.1UF
C167 2.1UF
C155 10UF/16V_B
C57 2.1UF
C178 10UF/16V_B
C59 2.1UF
C150 47PF
FB18 HF70ACB_Y
FB14 HF70ACB_Y
EC51 .1UF
EC54 .1UF
R10 0
DVDTVOUT
TV-OUT
2PJ-00100000 SINGATRON
CN3 RCA JACK
L28 1.2UH_Y LK32161R2K
L4 1.2UH_Y LK32161R2K
R210 75
C152 150PF
C151 270PF
C145 47PF
L26 1.2UH_Y K32161R2K
L27 1.2UH_Y LK32161R2K
LUMA
R211 75
C153 150PF
C146 270PF
C43 47PF
L9 1.2UH_Y LK32161R2K
L10 1.2UH_Y LK32161R2K
CRMA
R32 75
C56 150PF
C44 270PF
R212 360
R201 47K
R8 1K
R200 1K
L25 HF70ACB_Y
HS4
CN8
S-VIDEO CONN
2MJ-2512U110 SINGATRON
TVGND
J1
JCLOSE
RED
GREEN
BLUE
Place as close as possible
FB1 HF70ACB_Y
FB2 HF70ACB_Y
FB10 HF70ACB_Y
FRED
FGREEN
FBLUE
R198 75
R199 75
R205 75
C16 247PF
C17 247PF
C40 47PF
C37 247PF
C36 247PF
C18 47PF
C138 .1UF
CN6
DD2DATA
CRT-HS
CRT5V
CRT-VS
DD2CLK
SUYIN 7535S-15G2T
EHSYNC
EVSYNC
Q29 2N7002
Q30 2N7002
Q32 2N7002
Q31 2N7002
L6 FERBEAD_Z
L7 FERBEAD_Z
L2 FERBEAD_Z
L8 FERBEAD_Z
EC36 100PF
EC35 100PF
C38 100PF
C39 100PF
EC42 68PF
EC41 68PF
EC2 30PF
EC40 30PF
MDDC2BD
MDDC2BC
R207 15K
R206 15K
U2
PAC DN006
C139 .1UF
U3
PAC DN004
C41 .1UF
LAYOUT NOTE:
PLACE THESE PARTS NEAR CRT CONN.
DUAL CORP.
Title
CRT CONN. CH7004 TV-OUT
Size B
Document Number
REV 03
Date: July 23, 1998
Sheet 10 of 24

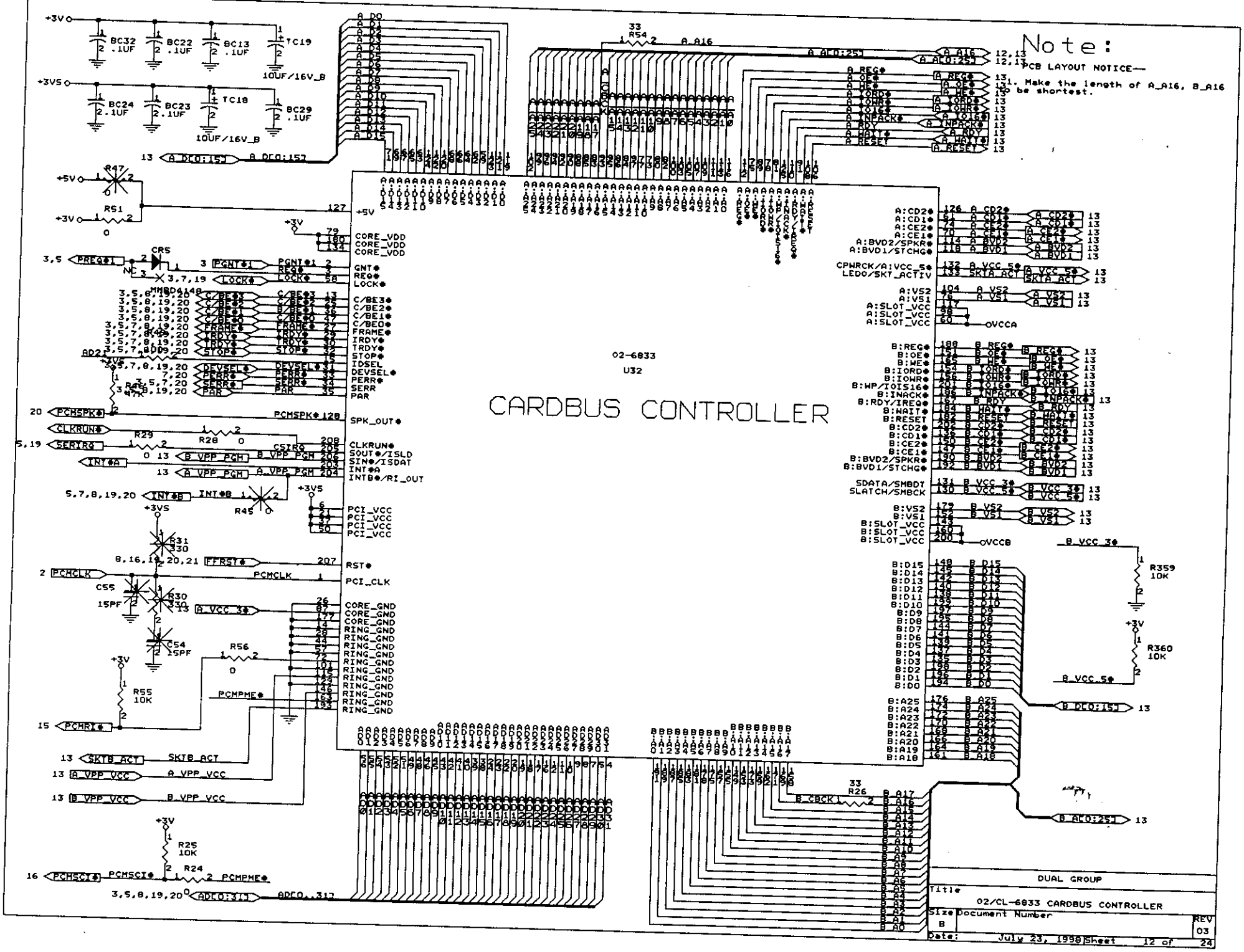
Note:
PCB LAYOUT NOTICE—
1. Make the length of A_A16, B_A16 to be shortest.
CARDBUS CONTROLLER
02-6833
U32
DUAL GROUP
Title
02/CL-6833 CARDBUS CONTROLLER
Size B
Document Number
REV 03
Date: July 23, 1998
Sheet 12 of 24

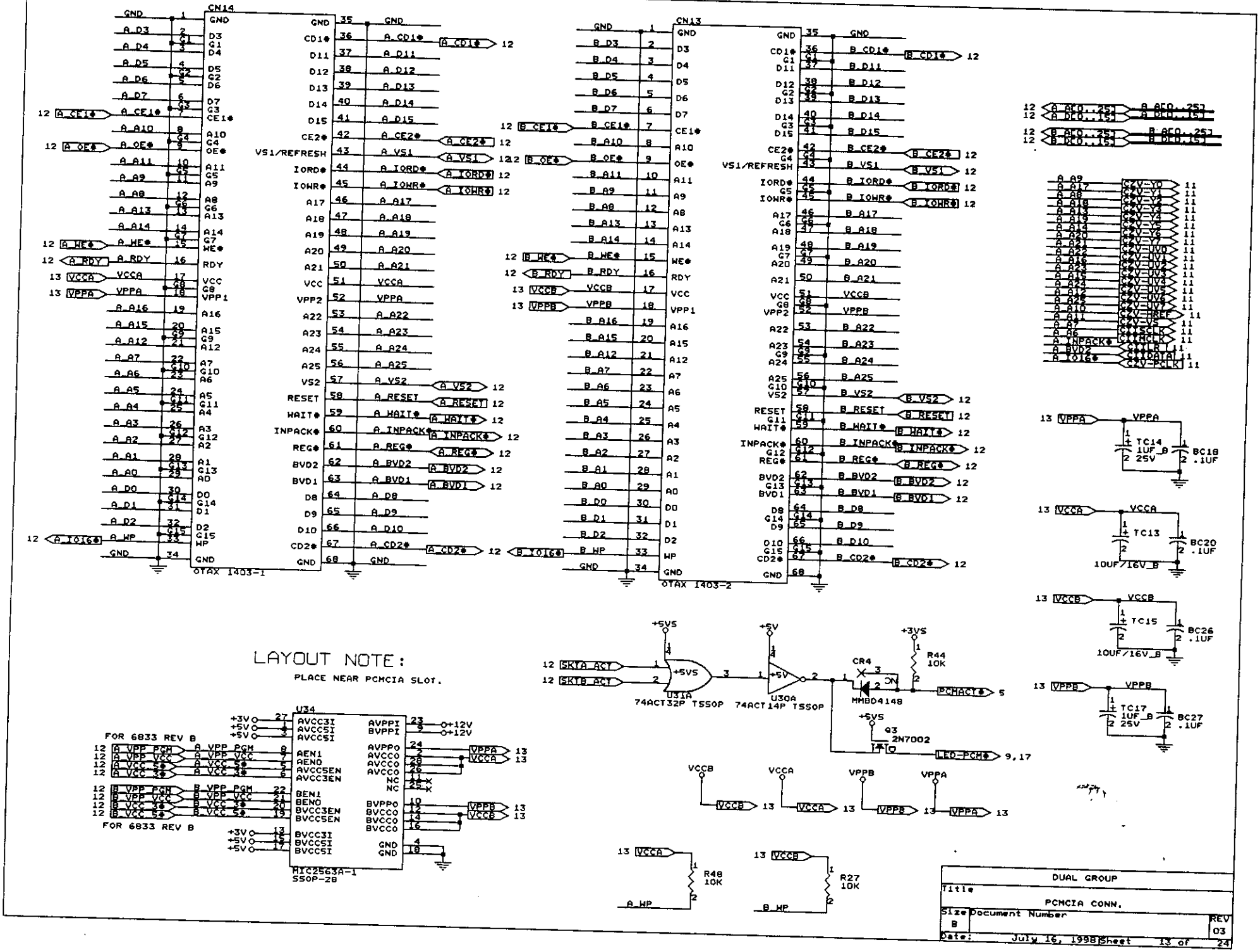
CN14
OTAX 1403-1
CN13
OTAX 1403-2
LAYOUT NOTE:
PLACE NEAR PCMCIA SLOT.
FOR 6833 REV B
U34
HIC2563A-1
SSOP-28
U31A
74ACT32P TSSOP
U30A
74ACT14P TSSOP
MMBD4148
2N7002
TC14 1UF_B 25V
BC18 .1UF
TC13 10UF/16V_B
BC20 .1UF
TC15 10UF/16V_B
BC26 .1UF
TC17 1UF_B 25V
BC27 .1UF
R44 10K
R48 10K
R27 10K
DUAL GROUP
PCMCIA CONN.
Size B
Document Number
REV 03
Date: July 16, 1998
Sheet 13 of 24

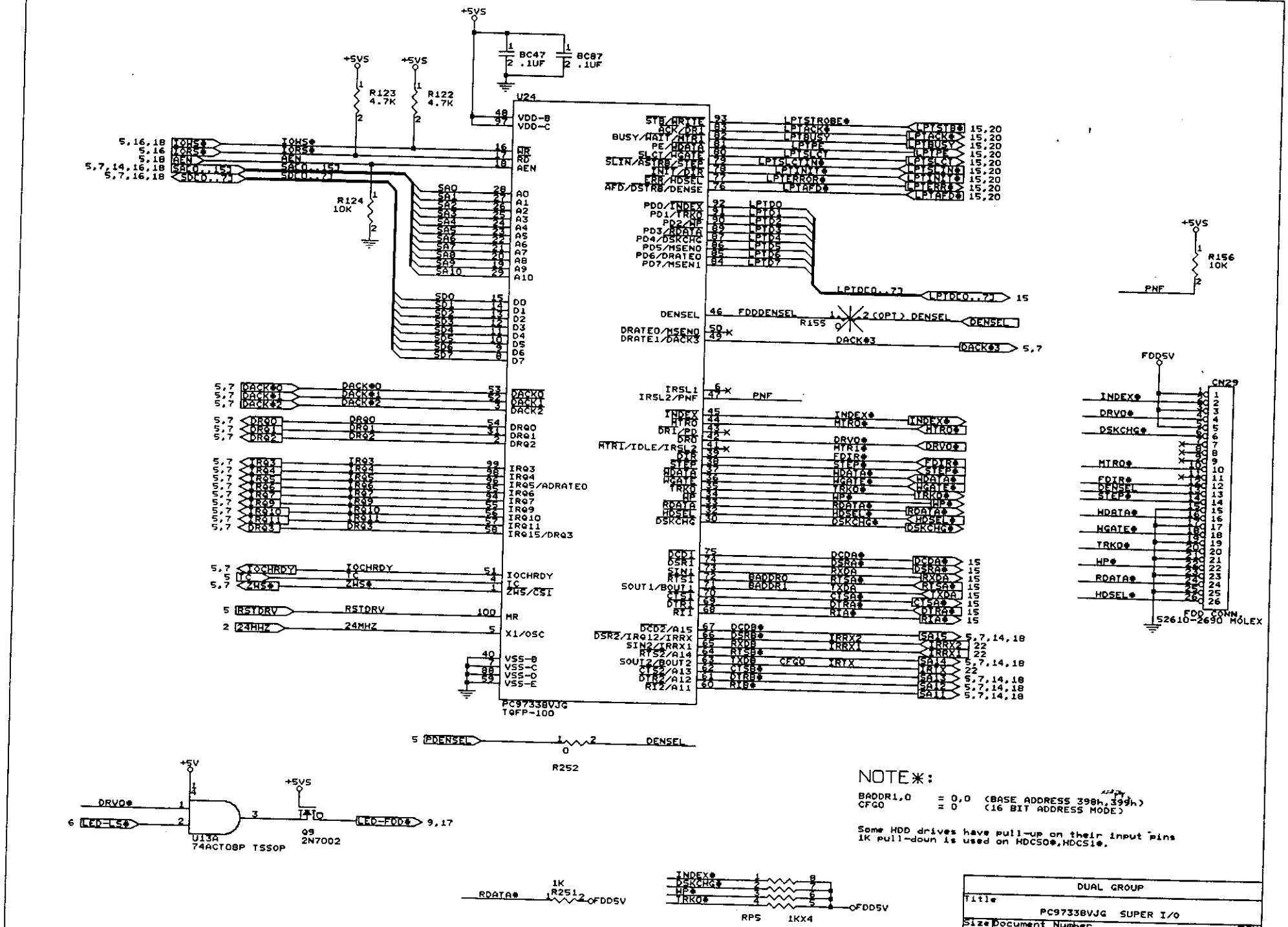
U24
PC97338VJG
TQFP-100
BC47 .1UF
BC87 .1UF
R123 4.7K
R122 4.7K
R124 10K
R156 10K
R155
R252
R251 1K
RPS 1KX4
CN29
FDD CONN
52610-2690 MOLEX
U13A
74ACT08P TSSOP
Q9
2N7002
NOTE*:
BADDR1,0 = 0,0 (BASE ADDRESS 398h,399h)
CFG0 = 0 (16 BIT ADDRESS MODE)
Some HDD drives have pull-up on their input pins
1K pull-down is used on HDCS0*,HDCS1*.
DUAL GROUP
Title
PC97338VJG SUPER I/O
Size B
Document Number
REV 03
Date: July 16, 1998
Sheet 14 of 24

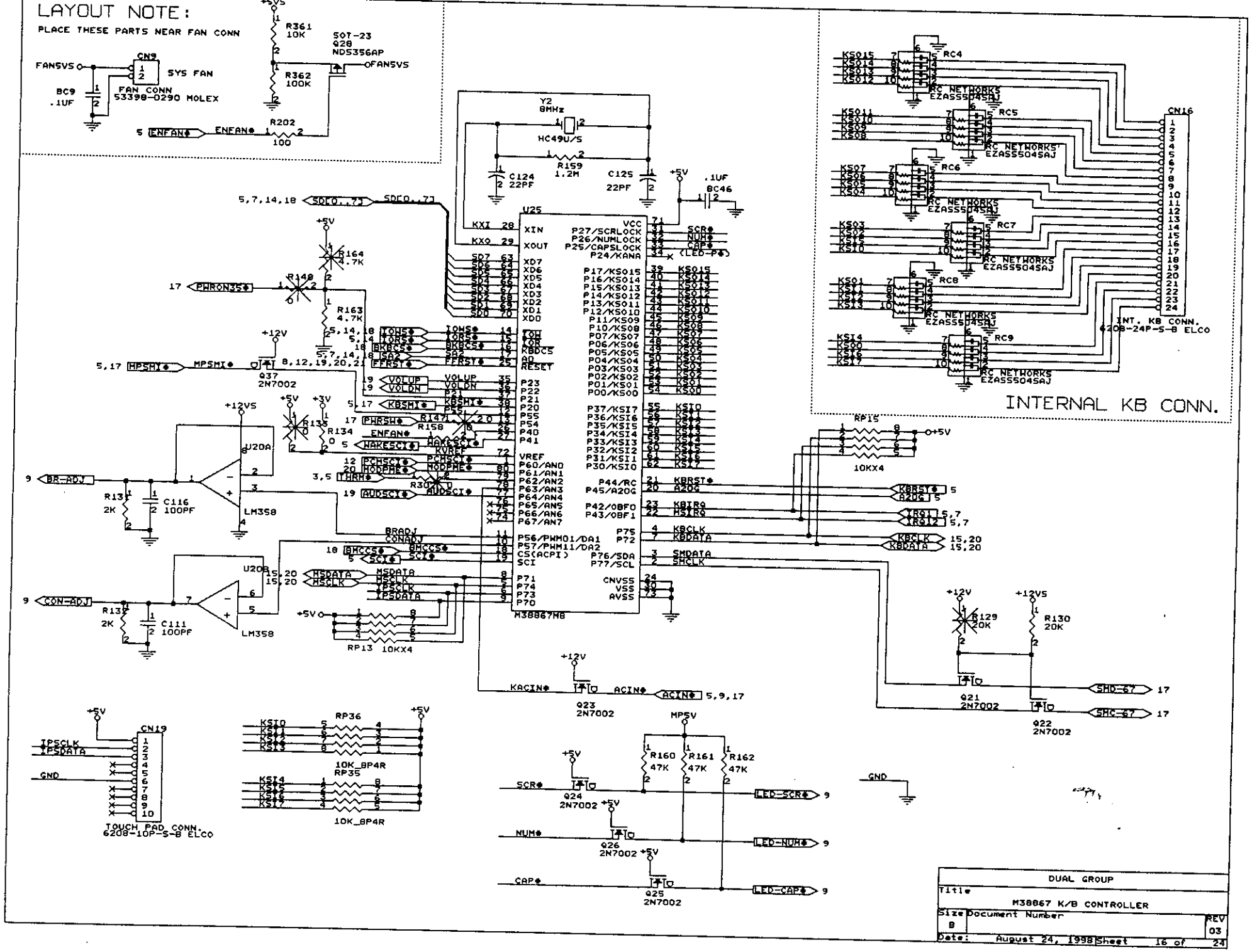
LAYOUT NOTE:
PLACE THESE PARTS NEAR FAN CONN
CN9
SYS FAN
FAN CONN
53398-0290 MOLEX
FAN5VS
BC9
.1UF
R361
10K
R362
100K
SOT-23
Q28
NDS356AP
OFAN5VS
R202
100
ENFAN#
Y2
8MHz
HC49U/S
R159
1.2M
C124
22PF
C125
22PF
BC46
.1UF
U25
M38867MB
XIN
XOUT
VCC
P27/SCRLOCK
P26/NUMLOCK
P25/CAPSLOCK
P24/KANA
P17/KS015
P16/KS014
P15/KS013
P14/KS012
P13/KS011
P12/KS010
P11/KS009
P10/KS008
P07/KS07
P06/KS06
P05/KS05
P04/KS04
P03/KS03
P02/KS02
P01/KS01
P00/KS00
P37/KSI7
P36/KSI6
P35/KSI5
P34/KSI4
P33/KSI3
P32/KSI2
P31/KSI1
P30/KSI0
P44/RC
P45/A20G
P42/OBF0
P43/OBF1
P75
P72
P76/SDA
P77/SCL
CNVSS
VSS
AVSS
VREF
P60/AN0
P61/AN1
P62/AN2
P63/AN3
P64/AN4
P65/AN5
P66/AN6
P67/AN7
P56/PWM01/DA1
P57/PWM11/DA2
CS(ACPI)
SCI
P71
P74
P73
P70
RESET
KBDCS
AD
P23
P22
P21
P20
P55
P54
P40
P41
KXI
KXO
SD7
SD6
SD5
SD4
SD3
SD2
SD1
SD0
XD7
XD6
XD5
XD4
XD3
XD2
XD1
XD0
IOW
IOR
SA2
FFRST#
VOLUP
VOLDN
KBSHI#
PWRSW#
HAKESCI#
KVREF
PCHSCI#
MODPME#
THRM#
AUDSCI#
BRADJ
CONADJ
BMCCS#
SCI#
MSDATA
MSCLK
TPSCLK
TPSDATA
KBRST#
A20G
KBIRQ
MSIRQ
KBCLK
KBDATA
SMDATA
SMCLK
SCR#
NUM#
CAP#
(LED-P#)
KACIN#
ACIN#
R164
4.7K
R148
R163
4.7K
Q37
2N7002
R135
R134
R147
20
R158
R130
R131
2K
C116
100PF
U20A
LM358
U20B
C111
100PF
RP13
10KX4
Q23
2N7002
RP15
10KX4
R129
20K
R130
20K
Q21
2N7002
Q22
2N7002
SHD-67
SHC-67
CN19
TOUCH PAD CONN.
6208-10P-S-8 ELCO
RP36
10K_8P4R
RP35
10K_8P4R
R160
47K
R161
47K
R162
47K
Q24
2N7002
Q26
2N7002
Q25
2N7002
LED-SCR#
LED-NUM#
LED-CAP#
GND
MPSV
RC4
RC5
RC6
RC7
RC8
RC9
RC NETWORKS
EZASS504SAJ
CN16
INT. KB CONN.
6208-24P-S-8 ELCO
INTERNAL KB CONN.
DUAL GROUP
Title
M38867 K/B CONTROLLER
Size
B
Document Number
REV
03
Date: August 24, 1998
Sheet 16 of 24

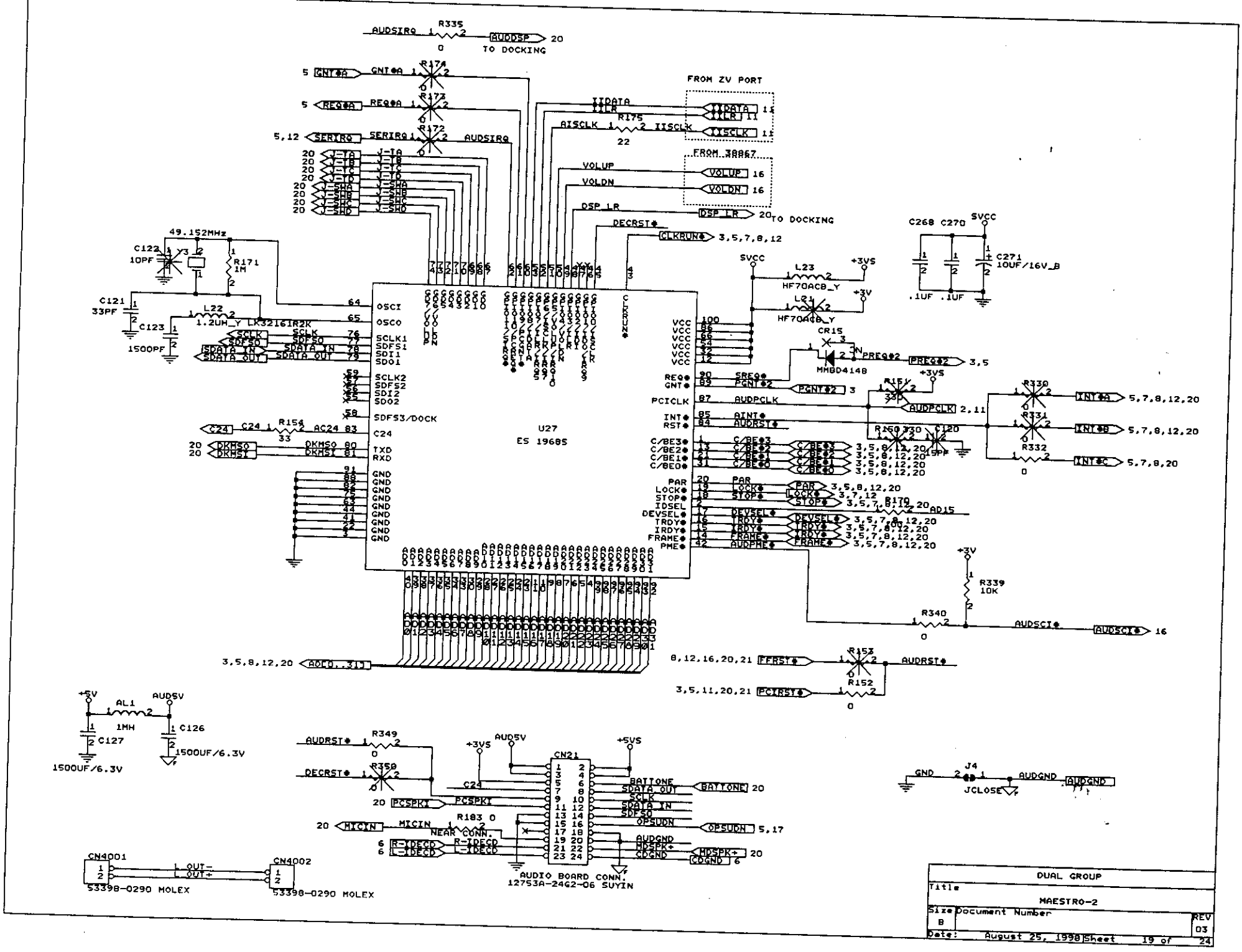
U27
ES 19685
TO DOCKING
FROM ZV PORT
FROM 38867
49.152MHz
AUDSIRQ
SERIRQ
VOLUP
VOLDN
DSP_LR
DECRST#
CLKRUN#
AUDPCLK
AUDRST#
AUDSCI#
AUDGND
AUDIO BOARD CONN.
12753A-24G2-06 SUYIN
NEAR CONN.
5339B-0290 MOLEX
DUAL GROUP
MAESTRO-2
Size B
Document Number
REV 03
Date: August 25, 1998
Sheet 19 of 24

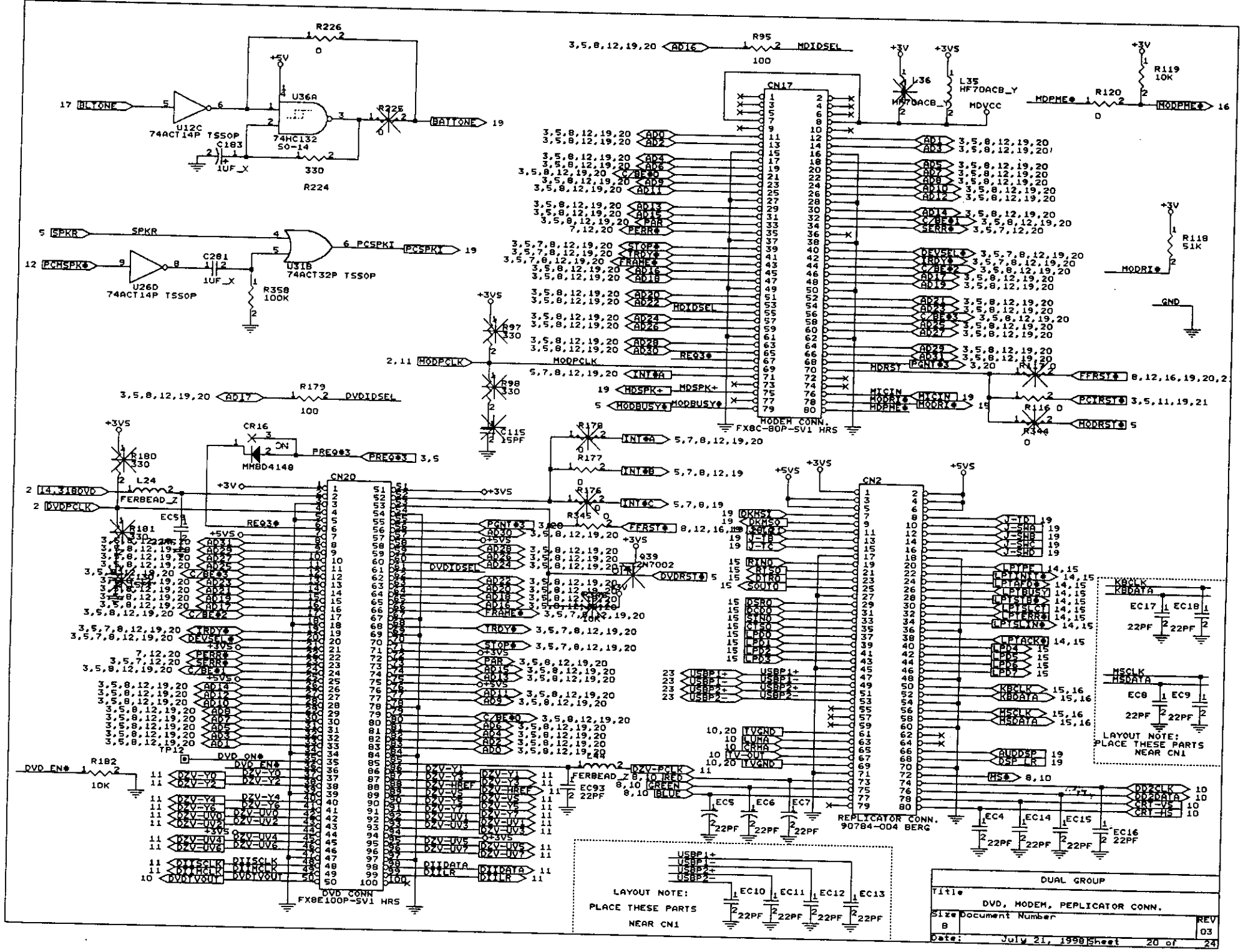
R226
0
+5V
U36A
74HC132
SO-14
R225
BATTONE
17 BLTONE
U12C
74ACT14P TSSOP
C183
1UF_X
330
R224
5 SPKR
SPKR
6 PCSPKI
PCSPKI
12 PCMSPK#
U26D
74ACT14P TSSOP
C281
1UF_X
U31B
74ACT32P TSSOP
R358
100K
R95
100
MDIDSEL
CN17
MODEM CONN.
FX8C-80P-SV1 HRS
L36
MM70ACB_Y
L35
HF70ACB_Y
MDVCC
MDPME#
R120
0
R119
10K
MODPME#
MODRI#
R118
51K
GND
R97
330
R98
330
C115
15PF
2,11 MODPCLK
MODPCLK
MDSPK+
MODBUSY#
MDRSY
MICIN
FFRST#
PCIRST#
MODRST#
R116 0
R344
0
R179
100
DVDIDSEL
CR16
MMBD4148
PREQ#3
R180
330
L24
FERBEAD_Z
14.318DVD
DVDPCLK
EC5
R181
330
CN20
DVD CONN
FX8E100P-SV1 HRS
R178
R177
R176
R345
Q39
2N7002
DVDRST#
R182
10K
DVD_EN#
DVD_ON#
TP12
FERBEAD_Z
EC93
22PF
CN2
REPLICATOR CONN.
90784-004 BERG
EC5
EC6
EC7
EC4
EC14
EC15
EC16
22PF
KBCLK
KBDATA
EC17
EC18
MSCLK
MSDATA
EC8
EC9
LAYOUT NOTE:
PLACE THESE PARTS
NEAR CN1
EC10
EC11
EC12
EC13
DUAL GROUP
Title
DVD, MODEM, PEPLICATOR CONN.
Size B
Document Number
REV 03
Date: July 21, 1998
Sheet 20 of 24

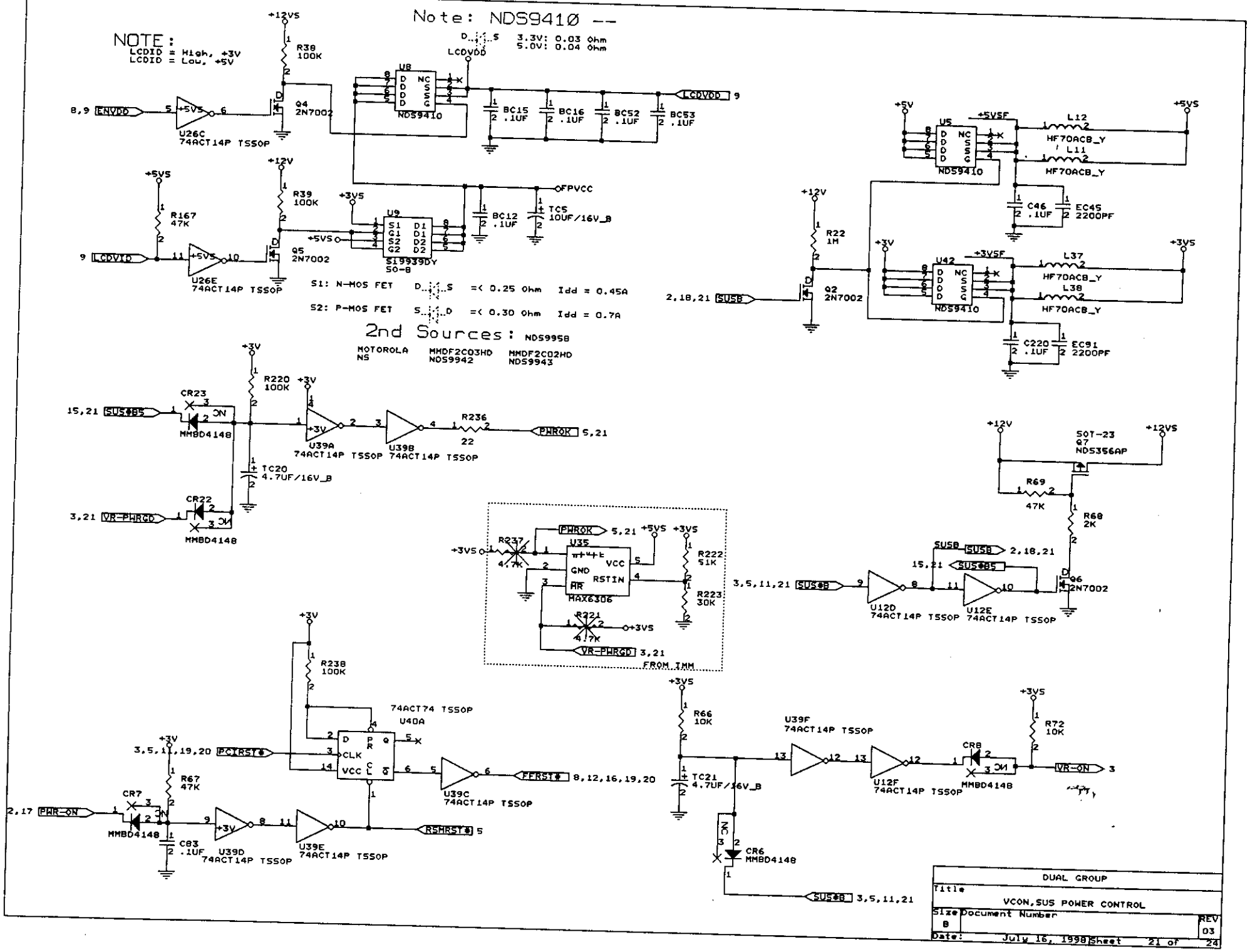
Note: NDS9410 --
NOTE:
LCDID = High, +3V
LCDID = Low, +5V
3.3V: 0.03 Ohm
5.0V: 0.04 Ohm
S1: N-MOS FET D S =< 0.25 Ohm Idd = 0.45A
S2: P-MOS FET S D =< 0.30 Ohm Idd = 0.7A
2nd Sources: NDS9958
MOTOROLA MMDF2C03HD NDS9942 MMDF2C02HD NDS9943
U26C 74ACT14P TSSOP
U26E 74ACT14P TSSOP
U8 NDS9410
U9 SI9939DY SO-8
U5 NDS9410
U42 NDS9410
U35 MAX6306
U39A 74ACT14P TSSOP
U39B 74ACT14P TSSOP
U39C 74ACT14P TSSOP
U39D 74ACT14P TSSOP
U39E 74ACT14P TSSOP
U39F 74ACT14P TSSOP
U12D 74ACT14P TSSOP
U12E 74ACT14P TSSOP
U12F 74ACT14P TSSOP
U40A 74ACT74 TSSOP
SOT-23 Q7 NDS356AP
FROM IMM
DUAL GROUP
Title
VCON,SUS POWER CONTROL
Size B
Document Number
REV 03
Date: July 16, 1998
Sheet 21 of 24

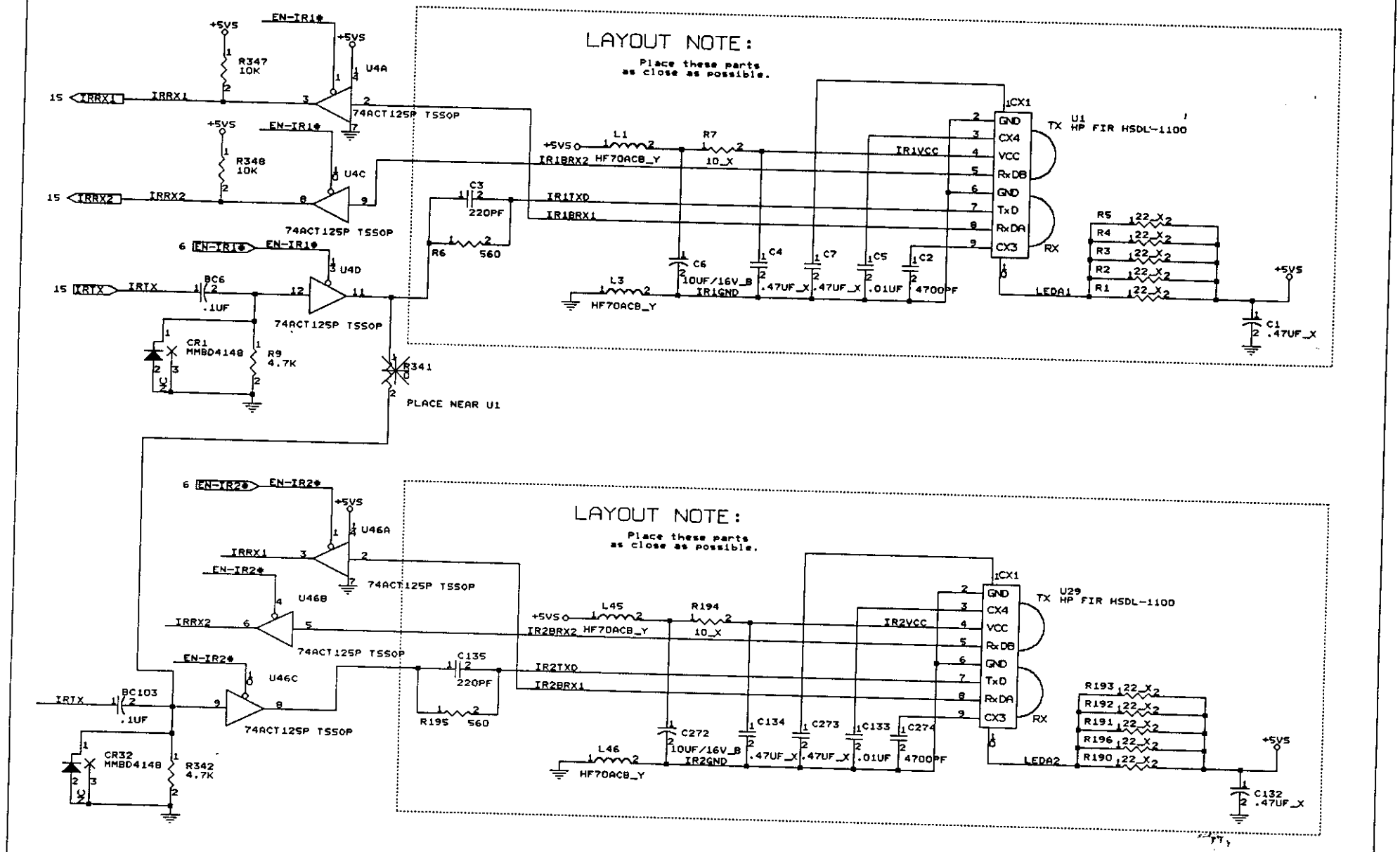

	DUAL GROUP
Title	IR MODULE
Size B	Document Number
	REV 04
Date: August 24, 1998	Sheet 22 of 24

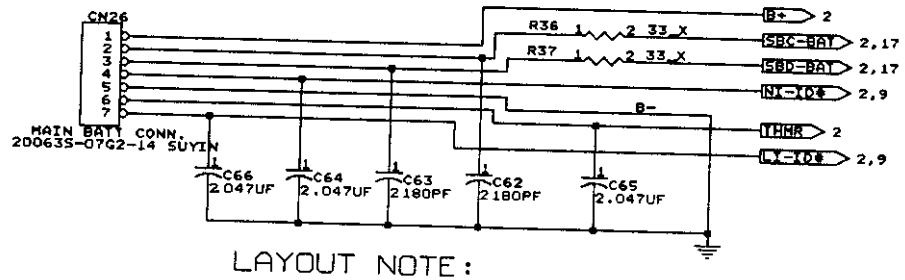

LAYOUT NOTE:

Place these parts as close as possible.

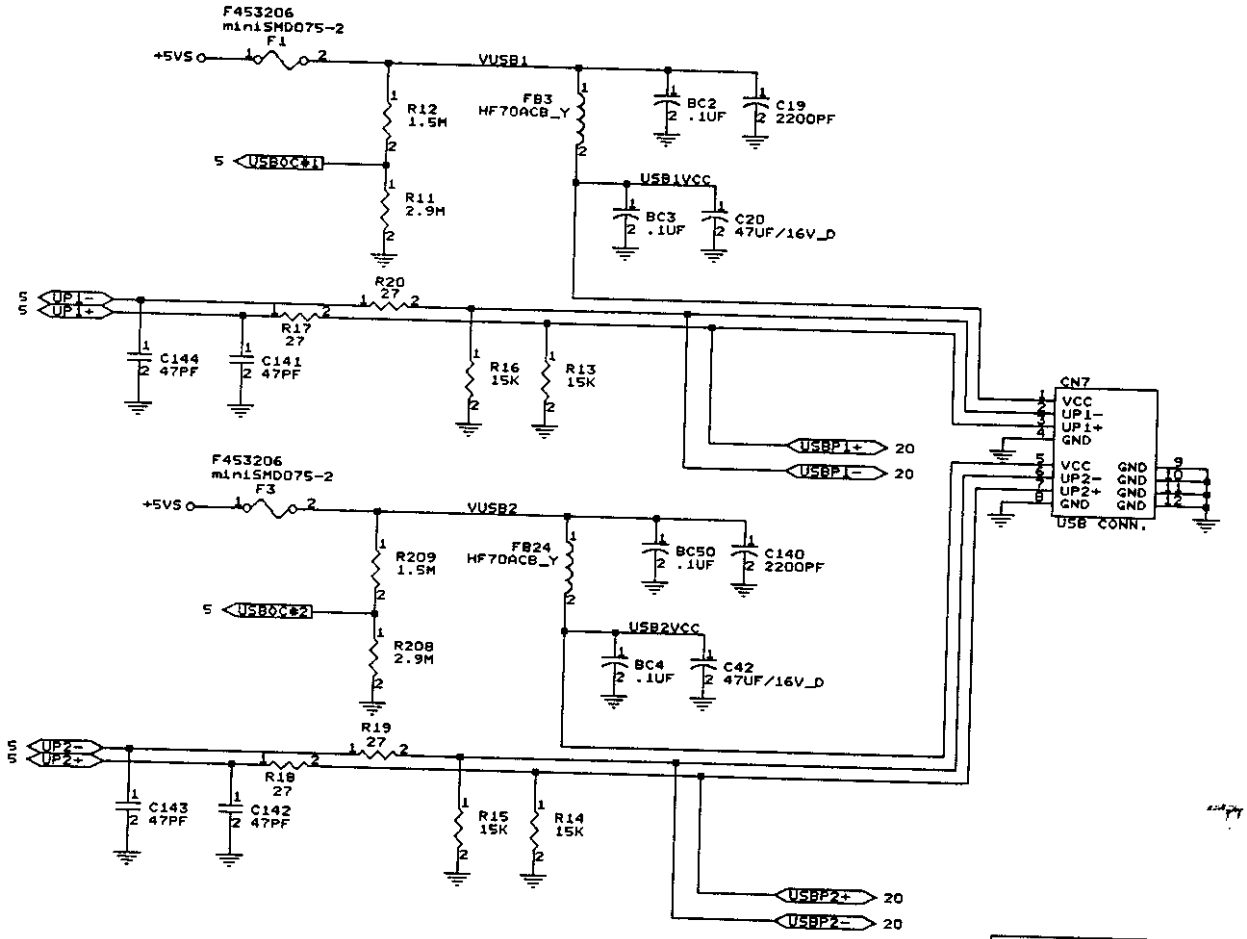

	DUAL GROUP
Title	USB & BATTERY CONN.
Size B	Document Number
	REV 03
Date: July 16, 1998	Sheet 23 of 24

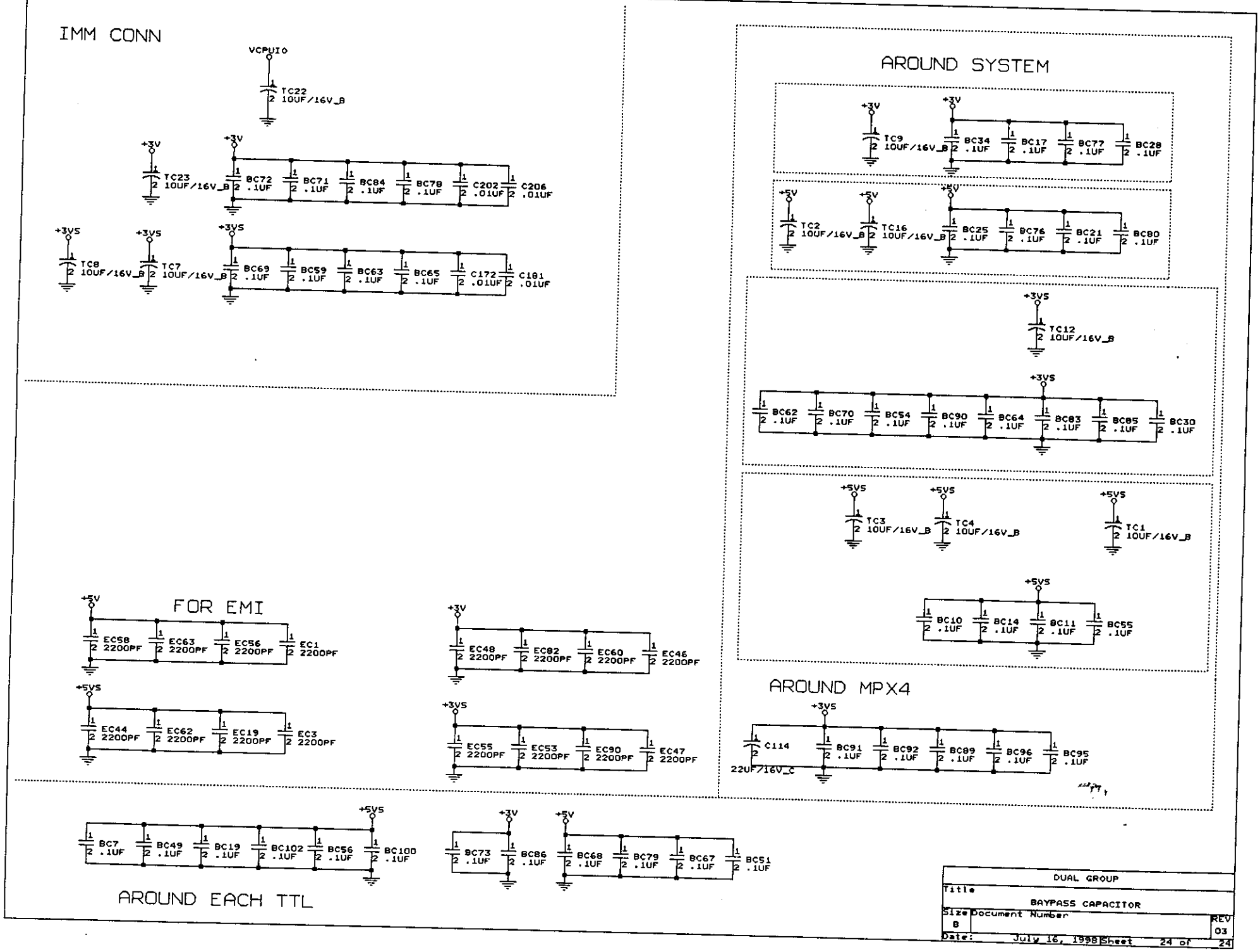
IMM CONN
VCPUIO
TC22 10UF/16V_B
+3V
TC23 10UF/16V_B
BC72 .1UF
BC71 .1UF
BC84 .1UF
BC78 .1UF
C202 .01UF
C206 .01UF
+3VS
TC8 10UF/16V_B
TC7 10UF/16V_B
BC69 .1UF
BC59 .1UF
BC63 .1UF
BC65 .1UF
C172 .01UF
C181 .01UF
AROUND SYSTEM
TC9 10UF/16V_B
BC34 .1UF
BC17 .1UF
BC77 .1UF
BC28 .1UF
+5V
TC2 10UF/16V_B
TC16 10UF/16V_B
BC25 .1UF
BC76 .1UF
BC21 .1UF
BC80 .1UF
TC12 10UF/16V_B
BC62 .1UF
BC70 .1UF
BC54 .1UF
BC90 .1UF
BC64 .1UF
BC83 .1UF
BC85 .1UF
BC30 .1UF
+5VS
TC3 10UF/16V_B
TC4 10UF/16V_B
TC1 10UF/16V_B
BC10 .1UF
BC14 .1UF
BC11 .1UF
BC55 .1UF
FOR EMI
EC58 2200PF
EC63 2200PF
EC56 2200PF
EC1 2200PF
EC44 2200PF
EC62 2200PF
EC19 2200PF
EC3 2200PF
EC48 2200PF
EC82 2200PF
EC60 2200PF
EC46 2200PF
EC55 2200PF
EC53 2200PF
EC90 2200PF
EC47 2200PF
AROUND MPX4
C114 22UF/16V_C
BC91 .1UF
BC92 .1UF
BC89 .1UF
BC96 .1UF
BC95 .1UF
BC7 .1UF
BC49 .1UF
BC19 .1UF
BC102 .1UF
BC56 .1UF
BC100 .1UF
BC73 .1UF
BC86 .1UF
BC68 .1UF
BC79 .1UF
BC67 .1UF
BC51 .1UF
AROUND EACH TTL
DUAL GROUP
Title
BAYPASS CAPACITOR
Size B
Document Number
REV 03
Date: July 16, 1998
Sheet 24 of 24

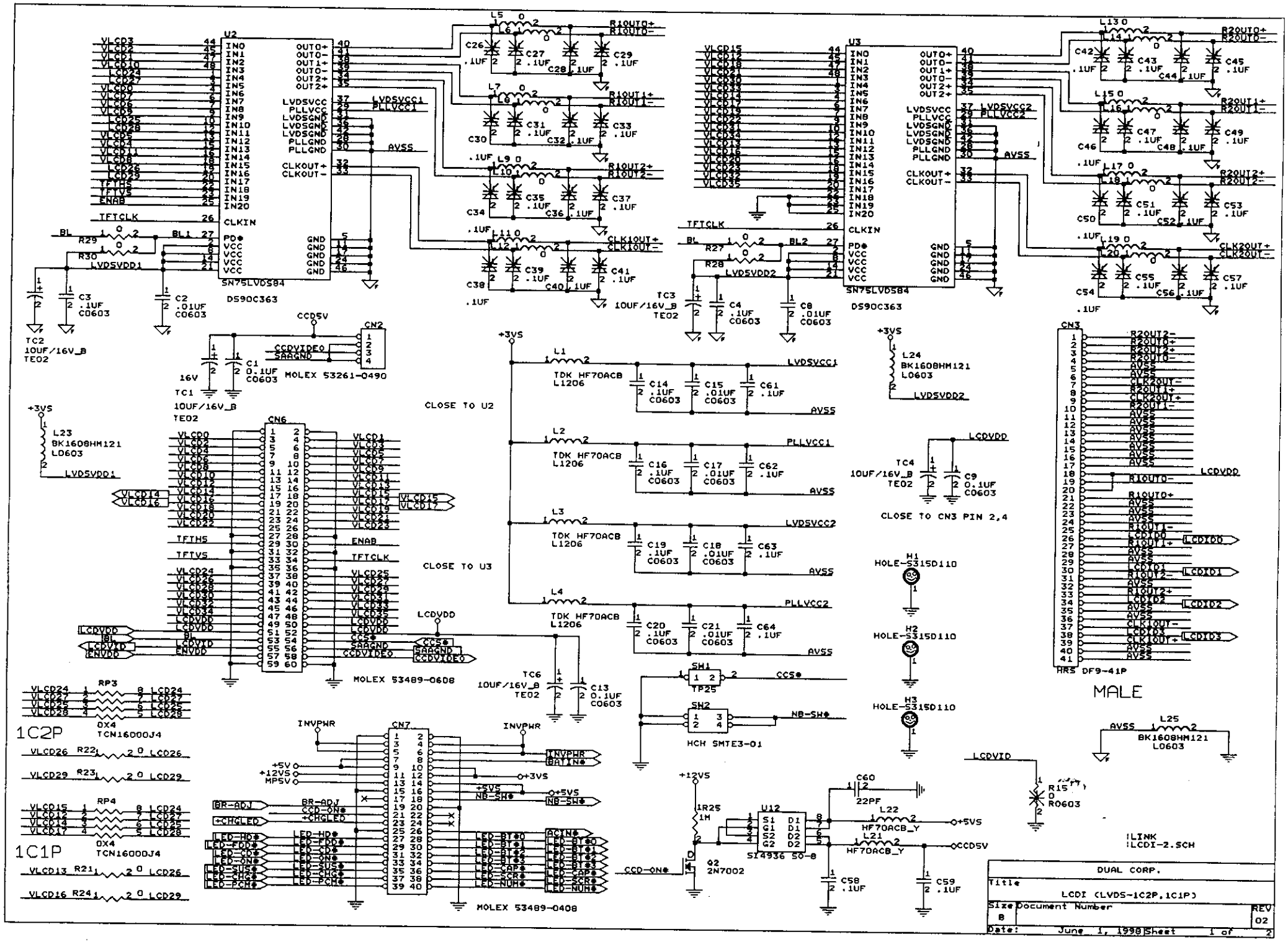
U2
SN75LVDS84
DS90C363
U3
SN75LVDS84
DS90C363
CN2
MOLEX 53261-0490
CN6
MOLEX 53489-0608
CN7
MOLEX 53489-0408
CN3
HRS DF9-41P
MALE
CLOSE TO U2
CLOSE TO U3
CLOSE TO CN3 PIN 2,4
RP3
1C2P
RP4
1C1P
U12
SI4936 SO-8
Q2
2N7002
SH1
TP25
SH2
HCH SMTE3-01
H1
HOLE-S315D110
H2
HOLE-S315D110
H3
HOLE-S315D110
!LINK
!LCDI-2.SCH
DUAL CORP.
Title
LCDI (LVDS-1C2P,1C1P)
Size
B
Document Number
REV
02
Date: June 1, 1998
Sheet 1 of 2

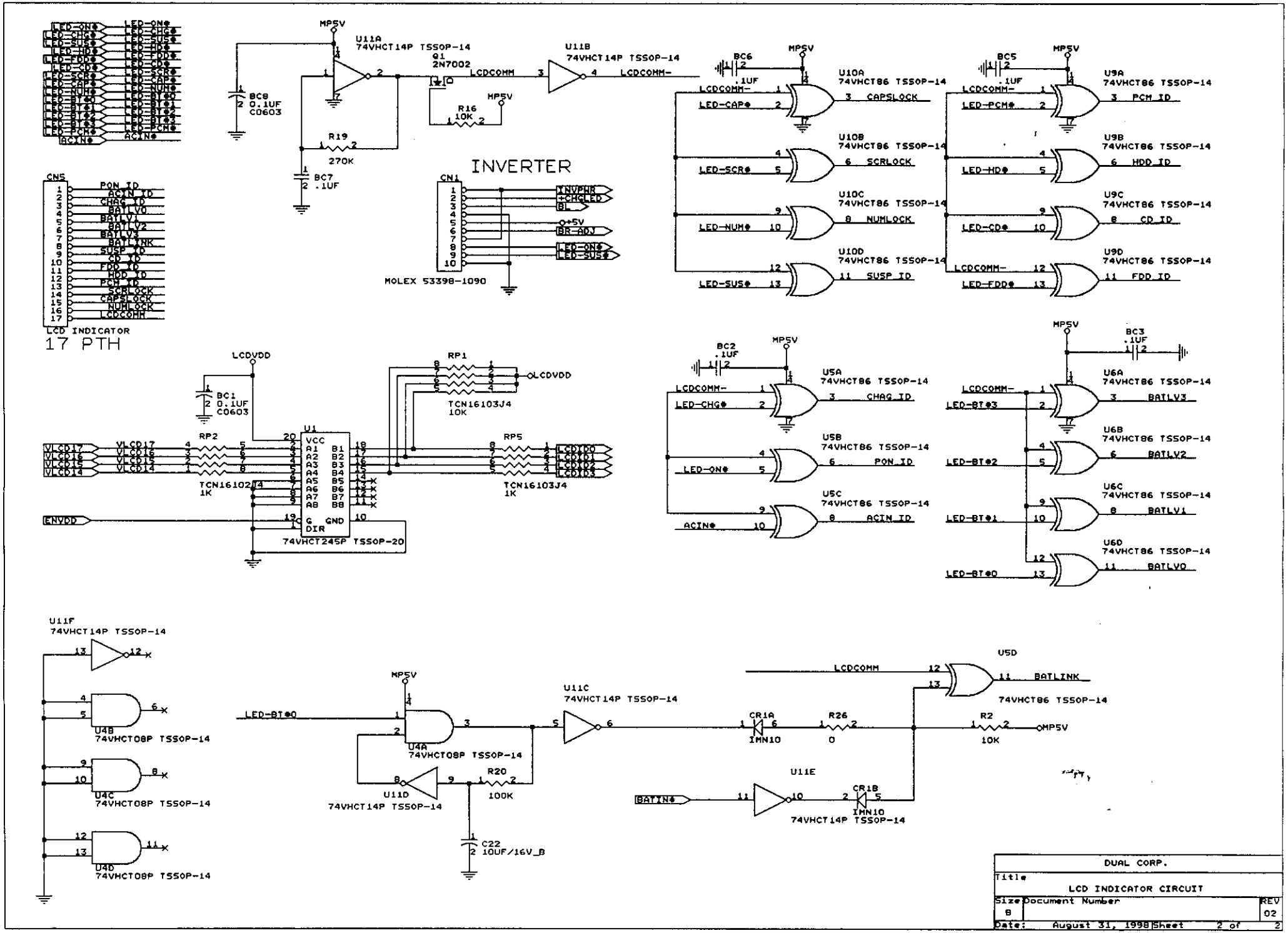
LED-ON#
LED-CHG#
LED-SUS#
LED-HD#
LED-FDD#
LED-CD#
LED-SCR#
LED-CAP#
LED-NUM#
LED-BT#0
LED-BT#1
LED-BT#2
LED-BT#3
LED-PCM#
ACIN#
MP5V
U11A
74VHCT14P TSSOP-14
Q1
2N7002
LCDCOMM
U11B
74VHCT14P TSSOP-14
LCDCOMM-
BC8
0.1UF
C0603
R16
10K
R19
270K
BC7
.1UF
INVERTER
CN1
INVPWR
+CHGLED
BL
+5V
BR-ADJ
LED-ON#
LED-SUS#
MOLEX 53398-1090
CN5
PON_ID
ACIN_ID
CHAG_ID
BATLV0
BATLV1
BATLV2
BATLV3
BATLINK
SUSP_ID
CD_ID
FDD_ID
HDD_ID
PCM_ID
SCRLOCK
CAPSLOCK
NUMLOCK
LCDCOMM
LCD INDICATOR
17 PTH
BC6
.1UF
U10A
74VHCT86 TSSOP-14
CAPSLOCK
U10B
74VHCT86 TSSOP-14
SCRLOCK
U10C
74VHCT86 TSSOP-14
NUMLOCK
U10D
74VHCT86 TSSOP-14
SUSP_ID
BC5
.1UF
U9A
74VHCT86 TSSOP-14
PCM_ID
U9B
74VHCT86 TSSOP-14
HDD_ID
U9C
74VHCT86 TSSOP-14
CD_ID
U9D
74VHCT86 TSSOP-14
FDD_ID
LCDVDD
BC1
0.1UF
C0603
RP1
TCN16103J4
10K
RP2
TCN16102J4
1K
U1
VCC
A1 B1
A2 B2
A3 B3
A4 B4
A5 B5
A6 B6
A7 B7
A8 B8
G GND
DIR
74VHCT245P TSSOP-20
RP5
TCN16103J4
1K
VLCD17
VLCD16
VLCD15
VLCD14
LCDID0
LCDID1
LCDID2
LCDID3
ENVDD
BC2
.1UF
U5A
74VHCT86 TSSOP-14
CHAG_ID
U5B
74VHCT86 TSSOP-14
PON_ID
U5C
74VHCT86 TSSOP-14
ACIN_ID
BC3
.1UF
U6A
74VHCT86 TSSOP-14
BATLV3
U6B
74VHCT86 TSSOP-14
BATLV2
U6C
74VHCT86 TSSOP-14
BATLV1
U6D
74VHCT86 TSSOP-14
BATLV0
U11F
74VHCT14P TSSOP-14
U4B
74VHCT08P TSSOP-14
U4C
74VHCT08P TSSOP-14
U4D
74VHCT08P TSSOP-14
U4A
74VHCT08P TSSOP-14
U11C
74VHCT14P TSSOP-14
U11D
74VHCT14P TSSOP-14
R20
100K
C22
10UF/16V_B
CR1A
1MN10
R26
0
U5D
74VHCT86 TSSOP-14
BATLINK
R2
10K
U11E
74VHCT14P TSSOP-14
BATIN#
CR1B
1MN10
DUAL CORP.
Title
LCD INDICATOR CIRCUIT
Size
B
Document Number
REV
02
Date: August 31, 1998
Sheet 2 of 2

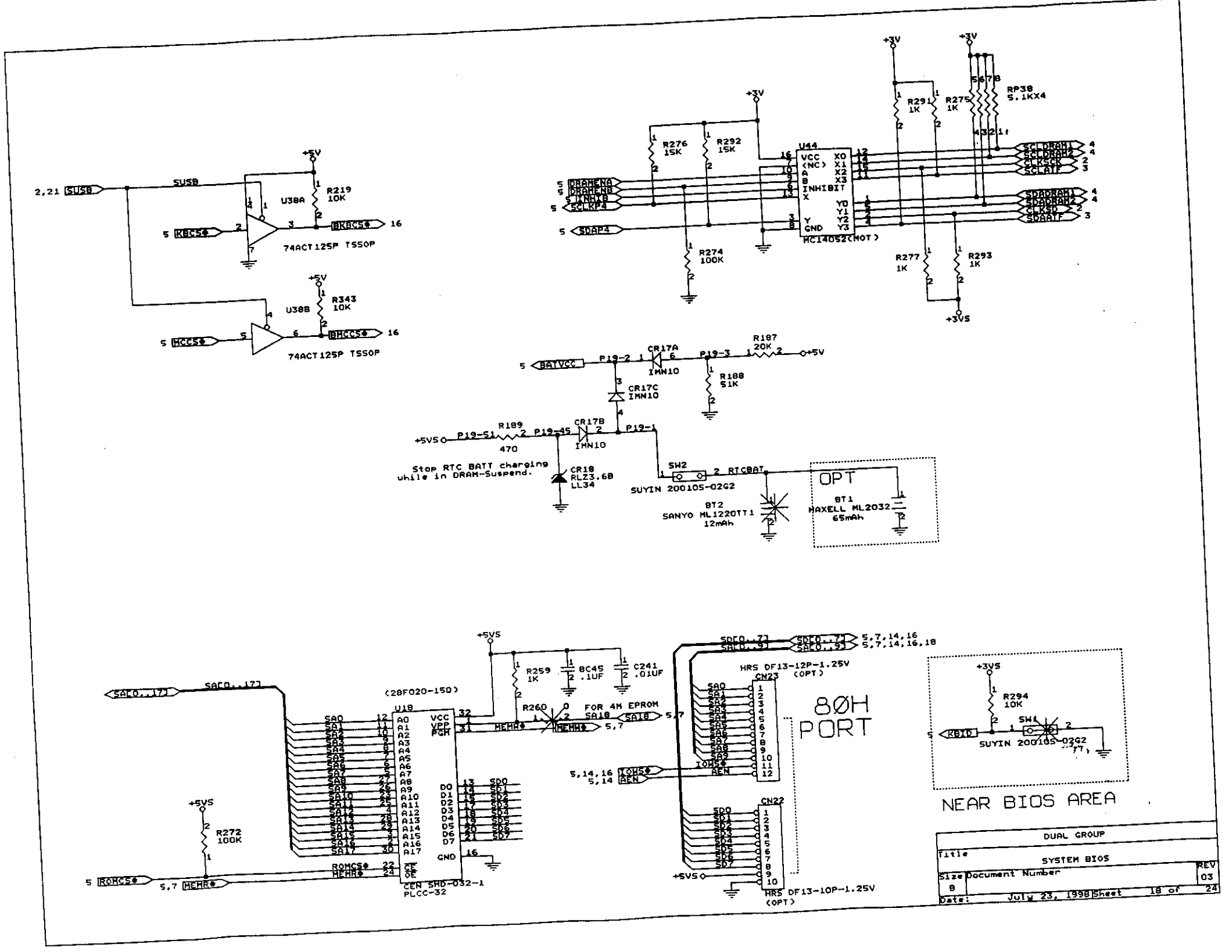
2,21 SUSB
SUSB
U38A
R219 10K
5 KBCS#
BKBCS# 16
74ACT125P TSSOP
U38B
R343 10K
5 MCCS#
BMCCS# 16
74ACT125P TSSOP
U44
VCC (NC) A B INHIBIT X Y GND
X0 X1 X2 X3 Y0 Y1 Y2 Y3
MC14052(MOT)
R276 15K
R292 15K
R274 100K
5 DRAMENA
5 DRAMENB
5 INHKB
5 SCLKP4
5 SDAP4
R291 1K
R275 1K
RP38 5.1KX4
R277 1K
R293 1K
+3VS
SCLDRAM1
SCLDRAM2
CLKSCK
SCLATF
SDADRAM1
SDADRAM2
CLKSD
SDAATF
5 BATVCC
P19-2
CR17A IMN10
P19-3
R187 20K
+5V
R188 51K
CR17C IMN10
+5VS
P19-51
R189 470
P19-45
CR17B IMN10
P19-1
Stop RTC BATT charging while in DRAM-Suspend.
CR18 RLZ3.6B LL34
SW2
SUYIN 200105-02G2
RTCBAT
BT2
SANYO ML1220TT1 12mAh
OPT
BT1
MAXELL ML2032 65mAh
SAC0..17
(28F020-150)
U18
VCC VPP PGM
A0 A1 A2 A3 A4 A5 A6 A7 A8 A9 A10 A11 A12 A13 A14 A15 A16 A17
D0 D1 D2 D3 D4 D5 D6 D7
GND
CE OE
ROMCS#
MEMR#
CEN SMD-032-1
PLCC-32
R259 1K
BC45 .1UF
C241 .01UF
R260
FOR 4M EPROM
SA18
MEMW#
5,7
R272 100K
5 ROMCS#
5,7 MEMR#
SDC0..7
SAC0..9
5,7,14,16
5,7,14,16,18
HRS DF13-12P-1.25V (OPT)
CN23
8ØH PORT
5,14,16 IOWS#
5,14 AEN
CN22
HRS DF13-10P-1.25V (OPT)
+3V
R294 10K
SW1
5 KBID
SUYIN 200105-02G2
NEAR BIOS AREA
DUAL GROUP
Title
SYSTEM BIOS
Size B
Document Number
REV 03
Date: July 23, 1998
Sheet 18 of 24

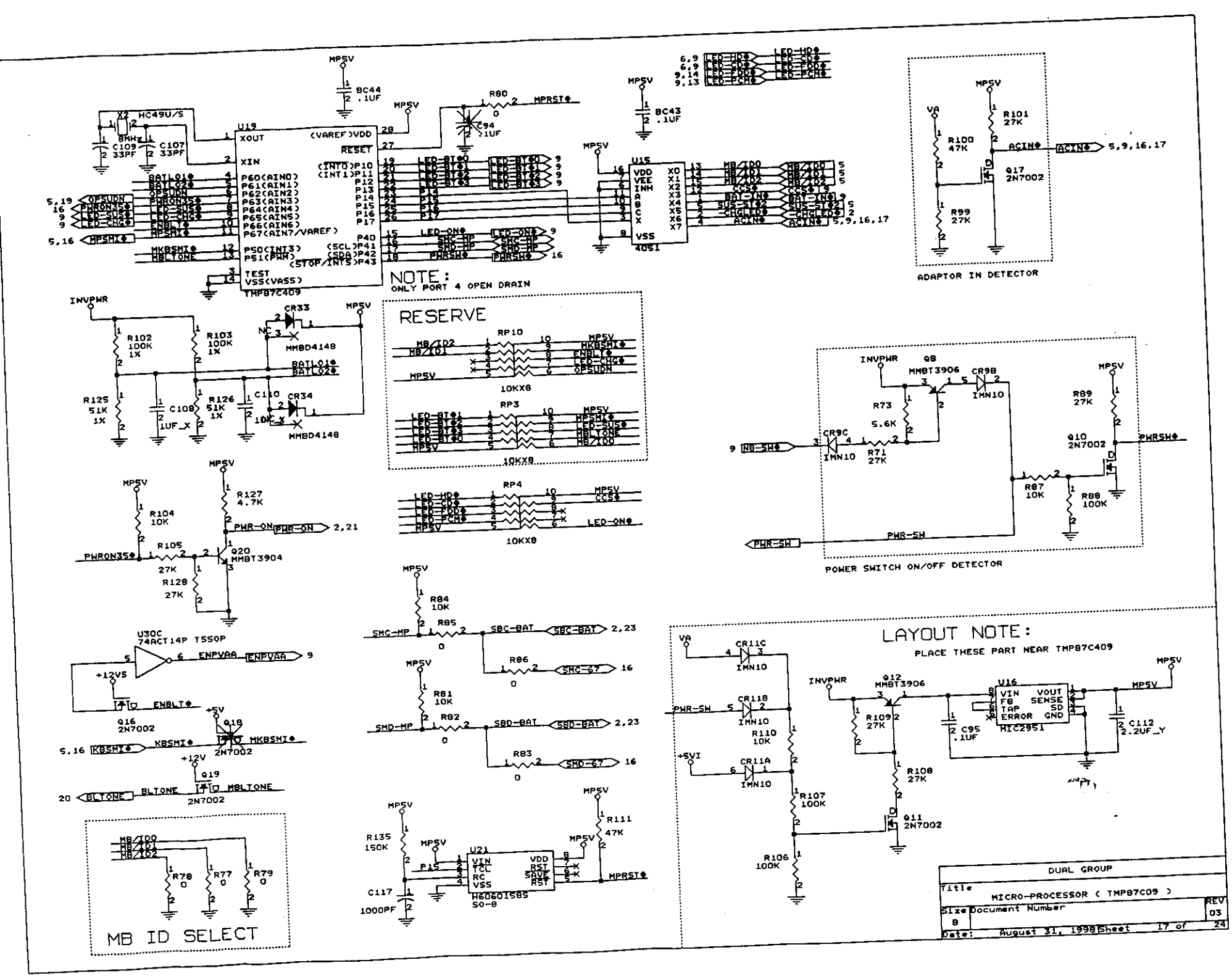
U19
TMP87C409
XOUT
XIN
TEST
VSS(VASS)
(VAREF)VDD
RESET
P60(AIN0)
P61(AIN1)
P62(AIN2)
P63(AIN3)
P64(AIN4)
P65(AIN5)
P66(AIN6)
P67(AIN7/VAREF)
P50(INT3)
P51(PWM)
(INT0)P10
(INT1)P11
P12
P13
P14
P15
P16
P17
P40
(SCL)P41
(SDA)P42
(STOP/INT5)P43
X2 HC49U/S
8MHz
C109 33PF
C107 33PF
BC44 .1UF
BC43 .1UF
C94 .1UF
R80 0
MPRSI#
U15
4051
VDD
VEE
INH
VSS
NOTE:
ONLY PORT 4 OPEN DRAIN
ADAPTOR IN DETECTOR
R101 27K
R100 47K
R99 27K
Q17 2N7002
ACIN#
RESERVE
RP10
10KX8
RP3
10KX8
RP4
10KX8
INVPWR
R102 100K 1%
R103 100K 1%
R125 51K 1%
R126 51K 1%
C108 1UF_X
C110 10UF_X
CR33 MMBD4148
CR34 MMBD4148
R104 10K
R105 27K
R128 27K
R127 4.7K
Q20 MMBT3904
PWR-ON
PWRON35#
U30C 74ACT14P TSSOP
ENPVAA
+12V5
Q16 2N7002
ENBLT#
Q18 2N7002
MKBSMI#
KBSMI#
Q19 2N7002
BLTONE
MBLTONE
R84 10K
R85 0
SMC-MP
SBC-BAT
R86 0
SMC-67
R81 10K
R82 0
SMD-MP
SBD-BAT
R83 0
SMD-67
R135 150K
C117 1000PF
U21
VIN
TCL
RC
VSS
VDD
RST
SAVE
RST
H60601585
SO-8
R111 47K
MPRSI#
MB ID SELECT
R78 0
R77 0
R79 0
POWER SWITCH ON/OFF DETECTOR
Q8 MMBT3906
CR9B IMN10
CR9C IMN10
R73 5.6K
R71 27K
R89 27K
Q10 2N7002
PWRSH#
R87 10K
R88 100K
PWR-SW
LAYOUT NOTE:
PLACE THESE PART NEAR TMP87C409
CR11C IMN10
CR11B IMN10
CR11A IMN10
R110 10K
R107 100K
R106 100K
Q12 MMBT3906
R109 27K
R108 27K
Q11 2N7002
U16
VIN
FB
TAP
ERROR
VOUT
SENSE
SD
GND
MIC2951
C95 .1UF
C112 2.2UF_Y
DUAL GROUP
Title
MICRO-PROCESSOR (TMP87C09)
Size B
Document Number
REV 03
Date: August 31, 1998
Sheet 17 of 24

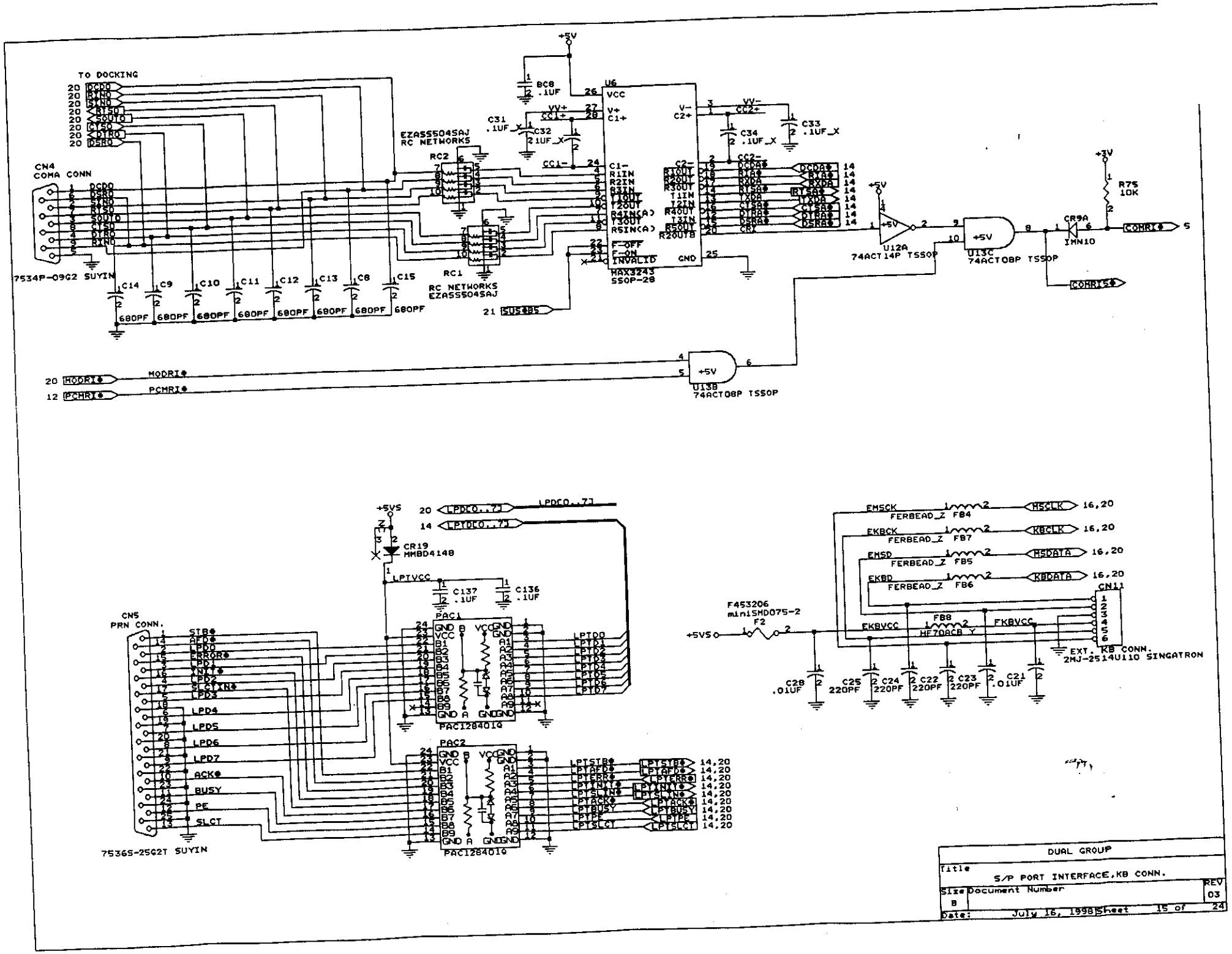
TO DOCKING
CN4
COMA CONN
7534P-09G2 SUYIN
EZA5S5045AJ
RC NETWORKS
RC2
RC1
RC NETWORKS
EZA5S5045AJ
U6
MAX3243
SSOP-28
U12A
74ACT14P TSSOP
U13C
74ACT08P TSSOP
U13B
74ACT08P TSSOP
R75
10K
CR9A
1MN10
COMRI#
COMRI5#
MODRI#
PCMRI#
CN5
PRN CONN.
7536S-25G2T SUYIN
PAC1
PAC2
PAC1284010
CR19
MMBD4148
LPTVCC
C137
.1UF
C136
.1UF
LPTD0..7
F453206
mini5MD075-2
F2
+5VS
EMSCK
FERBEAD_Z FB4
EKBCK
FERBEAD_Z FB7
EMSD
FERBEAD_Z FB5
EKBD
FERBEAD_Z FB6
EKBVCC
FB8
HF70ACB Y
FKBVCC
CN11
EXT. KB CONN.
2MJ-2514U110 SINGATRON
C28
.01UF
C25
220PF
C24
220PF
C22
220PF
C23
220PF
C21
.01UF
DUAL GROUP
Title
S/P PORT INTERFACE,KB CONN.
Size
B
Document Number
REV
03
Date: July 16, 1998
Sheet 15 of 24

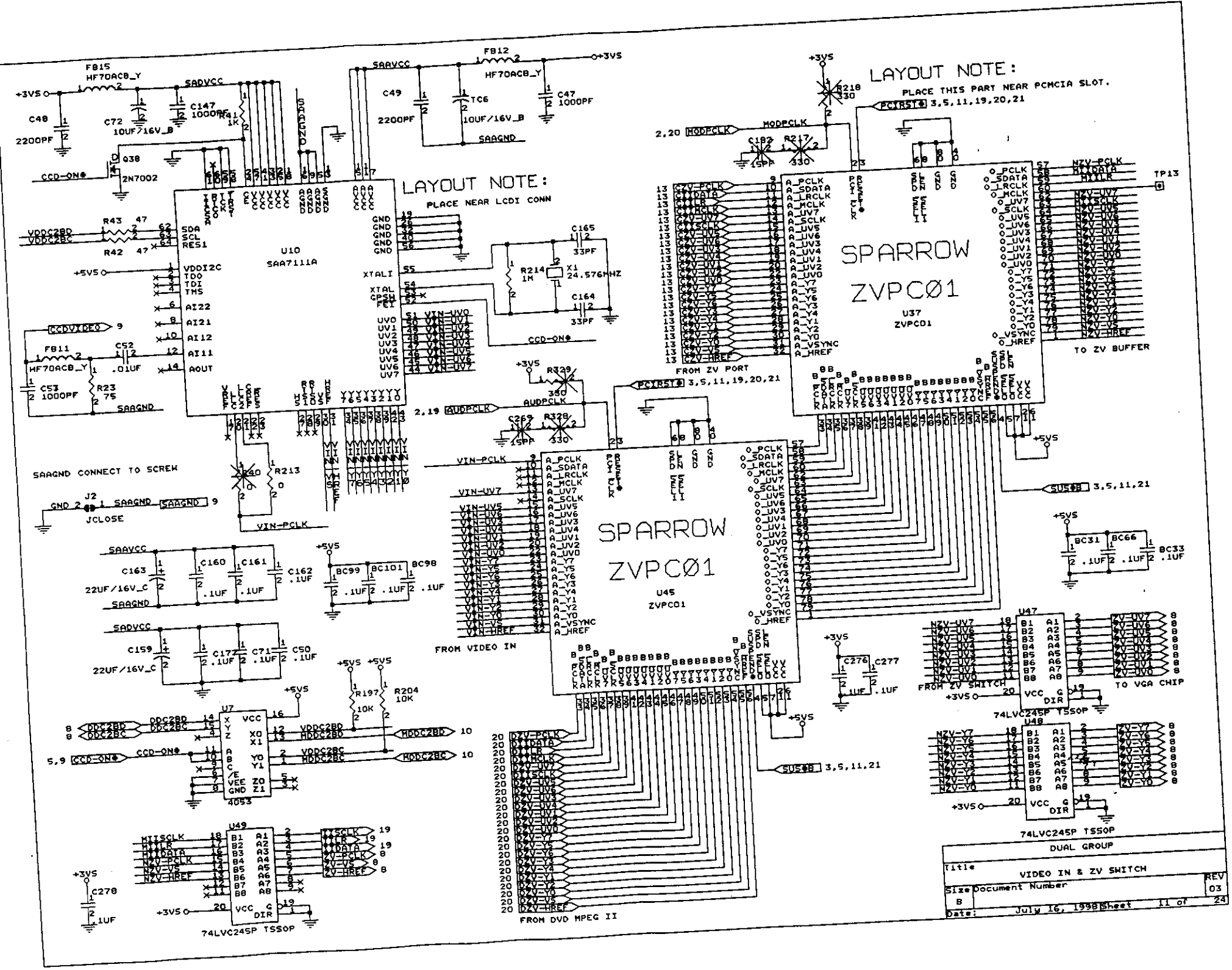
LAYOUT NOTE:
PLACE THIS PART NEAR PCMCIA SLOT.
LAYOUT NOTE:
PLACE NEAR LCDI CONN
SPARROW
ZVPC01
U37
ZVPC01
SPARROW
ZVPC01
U45
ZVPC01
U10
SAA7111A
FROM ZV PORT
TO ZV BUFFER
FROM VIDEO IN
FROM DVD MPEG II
FROM ZV SWITCH
TO VGA CHIP
74LVC245P TSSOP
4053
SAAGND CONNECT TO SCREW
JCLOSE
DUAL GROUP
Title
VIDEO IN & ZV SWITCH
Size
B
Document Number
REV
03
Date: July 16, 1998
Sheet 11 of 24