TEST REPORT

N°: 144014-691281-E **Version : 02**

Subject	**Radio spectrum matters** **tests according to standards:** **47 CFR Part 15.407 & RSS 247 Issue 1(DFS Only)**
Issued to	Technicolor 975, Avenue des Champs Blancs CS17616 35576 - Cesson-Sévigné Cedex France
FCC/IC registrated contact	5030 Sugarloaf Parkway Building 6 30044 - Lawrenceville United States

Apparatus under test

Product	OTT STB
Trade mark	**AirTV Player**
Manufacturer	**Technicolor (project ECHOSTAR)**
Model under test	**UIW4010ECH**
Serial number	**Sn 002**
FCC ID	**G95-UIW4010ECH**
IC ID	**431C-UIW4010ECH**

Test date	: September 28, 2016 to September 29, 2016
Test location	Fontenay Aux Roses
Composition of document	28 pages
Document issued on	October 19, 2016

Written by :
Mathieu CERISIER
Tests operator

Approved by :
Patrick TEIXEIRA
Technical manager

LABORATOIRE CENTRAL DES INDUSTRIES ELECTRIQUES
RCS Nanterre B 408 363 174
F - 92266 FONTENAY AUX ROSES

This document shall not be reproduced, except in full, without the written approval of the LCIE. This document contains results related only to the items tested. It does not imply the conformity of the whole production to the items tested. Unless otherwise specified, the decision of conformity takes into account the uncertainty of measurement. This document doesn't anticipate any certification decision.

PUBLICATION HISTORY

Version	Date	Author	Modification
01	October 6, 2016	Mathieu CERISIER	Creation of the document
02	October 19, 2016	Mathieu CERISIER	Correction of equipment information & channel tested information in page 26 & 30

SUMMARY

1. TEST PROGRAM 4
2. EQUIPMENT UNDER TEST: CONFIGURATION (DECLARED BY PROVIDER) 5
3. DFS DETECTION THRESHOLDS DETERMINATION, REFERENCE NOISE LEVEL & CHANNEL LOADING 15
4. DYNAMIC FREQUENCY SELECTION (DFS): CHANNEL CLOSING TRANSMISSION TIME & CHANNEL MOVE TIME 21
5. DYNAMIC FREQUENCY SELECTION (DFS): NON-OCCUPANCY PERIOD 24
6. ANNEX 3: RADAR TEST SIGNAL TYPE 5 & 0 27
7. UNCERTAINTIES CHART 28

1. TEST PROGRAM

References

- **47 CFR Part 15.407 (DFS requirements)**
- **RSS 247 Issue 1 (DFS requirements)**
- **KDB 905462 D02 UNII DFS Compliance Procedures New Rules v02**
- **KBD 905462 D04 Test Mode New Rules v01**
- **KDB 905462 D03 Client Without DFS New Rules v01r01**
- **KDB 905462 D06 802.11 Channel Plans New Rules v02**
- **KDB905462 D07 Overview UNII Rules v01**

Radio requirement:

Clause (47CFR Part 15.407 & RSS 247 Issue 1) Test Description	Test result - Comments			
Channel Availability Check Time & DFS Detection Threshold	☐ **PASS**	☐ **FAIL**	☑ **NA(1)(2)**	☐ **NP(3)**
U-NII Detection Bandwidth	☐ **PASS**	☐ **FAIL**	☑ **NA(1)**	☐ **NP(3)**
Statistical Performance Check & DFS Detection Threshold	☐ **PASS**	☐ **FAIL**	☑ **NA**	☐ **NP(3)**
Channel Closing Transmission Time & Channel Move Time	☑ **PASS**	☐ **FAIL**	☐ **NA**	☐ **NP(3)**
Non-occupancy period	☑ **PASS**	☐ **FAIL**	☐ **NA(1)**	☐ **NP(3)**
This table is a summary of test report, see conclusion of each clause of this test report for detail.				

(1): Client without radar detection
(2): Client with radar detection
(3): Limited program

2. EQUIPMENT UNDER TEST: CONFIGURATION (DECLARED BY PROVIDER)

2.1. HARDWARE IDENTIFICATION (EUT AND AUXILIARIES):

Equipment under test (EUT):
AirTV Player UIW4010ECH **Serial Number: Sn 002**

Inputs/outputs - Cable:

Access	Type	Length used (m)	Declared <3m	Shielded	Under test	Comments
1	Power Supply	-	☐	☐	☑	-
2	HDMI	1,8	☑	☐	☑	-

Auxiliary equipment used during test:

Type	Reference	Sn	Comments
Laptop	LCIE	-	Use to set the EUT

Equipment information:

Type:	WIFI			
Frequency band:	☑ 5150MHz-5250MHz	☑ 5250MHz-5350MHz	☑ 5470MHz-5725MHz	
	☑ 5725MHz-5850MHz			
Standard:	☐ 802.11a	☑ 802.11n HT20	☑ 802.11n HT40	
	☑ 802.11ac VHT20	☑ 802.11ac VHT40	☑ 802.11ac VHT80	
	☐ 802.11ac VHT160			
Spectrum Modulation:	☑ OFDM			
Channel bandwidth:	☑ 20MHz	☑ 40MHz	☑ 80MHz	☐ 160MHz
Antenna Type:	☑ Integral	☐ External	☐ Dedicated	
Antenna connector:	☑ Yes	☐ No	☐ Temporary for test	
Transmit chains:	☐ 1	☑ 2	☐ 3	☐ 4
	☐ 5	☐ 6	☐ 7	☐ 8
TPC:	☑ Yes		☐ No	
Receiver chains	☐ 1	☑ 2	☐ 3	☐ 4
	☐ 5	☐ 6	☐ 7	☐ 8
Type of equipment:	☑ Stand-alone	☐ Plug-in	☐ Combined	
Operating temperature range:	Tmin:	☐ -20°C	☑ 0°C	☐ X °C
	Tnom:	20°C		
	Tmax:	☐ 35°C	☐ 55°C	☑ 40 °C
Type of power source:	☑ AC power supply	☐ DC power supply	☐ Battery Battery Type	
Operating voltage range:	Vmin:	☐ X V/60Hz	☐ X Vdc	
	Vnom:	☑ 120V/60Hz	☐ X Vdc	
	Vmax	☐ X V/60Hz	☐ X Vdc	
Mode:	☐ Master	☐ Slave with radar detection	☑ Slave without radar detection	
Fixed outdoor P to P/M application:	☐ Yes	☑ No		
System architectures:	☑ IP based	☐ Frame based		
User access restriction:	☑ Yes (The manufacturer declares that information regarding the parameters of the detected Radar Waveforms is not available to the end user)	☐ No		

Antenna Characteristic			
Antenna assembly	**Gain (dBi)**	**Frequency Band (MHz)**	**Impedance(Ω)**
1	5	5.15-5.85GHz	50
2	6.3	5.15-5.85GHz	50
Accumulated	4,3	-	50

CHANNEL PLAN		
802.11a / 802.11n HT20/ 802.11ac VHT20		
Channel	**Frequency (MHz)**	**Available Channel**
C1=36	5180	☑
C2=40	5200	☑
44	5220	☑
C3=48	5240	☑
C4=52	5260	☑
56	5280	☑
C5=60	5300	☑
C6=64	5320	☑
C7=100	5500	☑
104	5520	☑
108	5540	☑
112	5560	☑
C8=116	5580	☑
120	5600	☐
124	5620	☐
128	5640	☐
132	5660	☑
136	5680	☑
C9=140	5700	☑
C10=144	5720	☐
C11=149	5745	☑
153	5765	☑
C12=157	5785	☑
161	5805	☑
C13=165	5825	☑

CHANNEL PLAN		
802.11n HT40/ 802.11ac VHT40		
Channel	Frequency (MHz)	Available Channel
C14=36+40	5190	☑
C15=44+48	5230	☑
C16=52+56	5270	☑
C17=60+64	5310	☑
C18=100+104	5510	☑
C19=108+112	5550	☑
116+120	5590	☐
124+128	5630	☐
C20=132+136	5670	☑
C21=140+144	5710	☐
C22=149+153	5755	☑
C23=157+161	5795	☑

CHANNEL PLAN		
802.11ac VHT80		
Channel	Frequency (MHz)	Available Channel
C24=36+40+44+48	5210	☑
C25=52+56+60+64	5290	☑
C26=100+104+108+112	5530	☑
C27=116+120+124+128	5610	☐
C28=132+136+140+144	5690	☐
C29=149+153+157+161	5775	☑

No DFS Channel
DFS Channel
Weather DFS Channel (Not Authorised for RSS-247)

DATA RATE									
802.11n HT20									
Available for EUT	MCS Index	Spatial streams	Modulation				Data Rate (Mbps)		Worst Case Modulation
							(GI = 800ns)	(GI = 400ns)	
☑	0	1	BPSK				6.5	7.2	☑
☑	1	1	QPSK				13	14.4	☐
☑	2	1	QPSK				19.5	21.7	☐
☑	3	1	16-QAM				26	28.9	☐
☑	4	1	16-QAM				39	43.3	☐
☑	5	1	64-QAM				52	57.8	☐
☑	6	1	64-QAM				58.5	65	☐
☑	7	1	64-QAM				65	72.2	☐
☑	8	2	BPSK				13	14.4	☑
☑	9	2	QPSK				26	28.9	☐
☑	10	2	QPSK				39	43.3	☐
☑	11	2	16-QAM				52	57.8	☐
☑	12	2	16-QAM				78	86.7	☐
☑	13	2	64-QAM				104	115.6	☐
☑	14	2	64-QAM				117	130.3	☐
☑	15	2	64-QAM				130	144.4	☐
☐	16	3	BPSK				19.5	21.7	☐
☐	17	3	QPSK				39	43.3	☐
☐	18	3	QPSK				58.5	65	☐
☐	19	3	16-QAM				78	86.7	☐
☐	20	3	16-QAM				117	130	☐
☐	21	3	64-QAM				156	173.3	☐
☐	22	3	64-QAM				175.5	195	☐
☐	23	3	64-QAM				195	216.7	☐
☐	24	4	BPSK				26	28.9	☐
☐	25	4	QPSK				52	57.8	☐
☐	26	4	QPSK				78	86.7	☐
☐	27	4	16-QAM				104	115.6	☐
☐	28	4	16-QAM				156	173.3	☐
☐	29	4	64-QAM				208	231.1	☐
☐	30	4	64-QAM				234	260	☐
☐	31	4	64-QAM				260	288.9	☐
☐	32	1	BPSK	-	-	-	-	-	☐
☐	33	2	16-QAM	QPSK	-	-	39	43.3	☐
☐	34	2	64-QAM	QPSK	-	-	52	57.8	☐
☐	35	2	64-QAM	16-QAM	-	-	65	72.2	☐
☐	36	2	16-QAM	QPSK	-	-	58.5	65	☐
☐	37	2	64-QAM	QPSK	-	-	78	86.7	☐
☐	38	2	64-QAM	16-QAM	-	-	97.5	108.3	☐
☐	39	3	16-QAM	QPSK	QPSK	-	52	57.8	☐
☐	40	3	16-QAM	16-QAM	QPSK	-	65	72.2	☐
☐	41	3	64-QAM	QPSK	QPSK	-	65	72.2	☐
☐	42	3	64-QAM	16-QAM	QPSK	-	78	86.7	☐
☐	43	3	64-QAM	16-QAM	16-QAM	-	91	101.1	☐
☐	44	3	64-QAM	64-QAM	QPSK	-	91	101.1	☐
☐	45	3	64-QAM	64-QAM	16-QAM	-	104	115.6	☐
☐	46	3	16-QAM	QPSK	QPSK	-	78	86.7	☐
☐	47	3	16-QAM	16-QAM	QPSK	-	97.5	108.3	☐
☐	48	3	64-QAM	QPSK	QPSK	-	97.5	108.3	☐
☐	49	3	64-QAM	16-QAM	QPSK	-	117	130	☐
☐	50	3	64-QAM	16-QAM	16-QAM	-	136.5	151.7	☐
☐	51	3	64-QAM	64-QAM	QPSK	-	136.5	151.7	☐
☐	52	3	64-QAM	64-QAM	16-QAM	-	156	173.3	☐
☐	53	4	16-QAM	QPSK	QPSK	QPSK	65	72.2	☐
☐	54	4	16-QAM	16-QAM	QPSK	QPSK	78	86.7	☐
☐	55	4	16-QAM	16-QAM	16-QAM	QPSK	91	101.1	☐
☐	56	4	64-QAM	QPSK	QPSK	QPSK	78	86.7	☐
☐	57	4	64-QAM	16-QAM	QPSK	QPSK	91	101.1	☐
☐	58	4	64-QAM	16-QAM	16-QAM	QPSK	104	115.6	☐
☐	59	4	64-QAM	16-QAM	16-QAM	16-QAM	117	130	☐
☐	60	4	64-QAM	QPSK	QPSK	QPSK	104	115.6	☐
☐	61	4	64-QAM	16-QAM	16-QAM	QPSK	117	130	☐
☐	62	4	64-QAM	16-QAM	16-QAM	16-QAM	130	144.4	☐
☐	63	4	64-QAM	64-QAM	64-QAM	QPSK	130	144.4	☐
☐	64	4	64-QAM	64-QAM	64-QAM	16-QAM	143	158.9	☐
☐	65	4	16-QAM	QPSK	QPSK	QPSK	97.5	108.3	☐
☐	66	4	16-QAM	16-QAM	QPSK	QPSK	117	130	☐
☐	67	4	16-QAM	16-QAM	16-QAM	QPSK	136.5	151.7	☐
☐	68	4	64-QAM	QPSK	QPSK	QPSK	117	130	☐
☐	69	4	64-QAM	16-QAM	QPSK	QPSK	136.5	151.7	☐
☐	70	4	64-QAM	16-QAM	16-QAM	QPSK	156	173.3	☐
☐	71	4	64-QAM	16-QAM	16-QAM	16-QAM	175.5	195	☐
☐	72	4	64-QAM	64-QAM	QPSK	QPSK	156	173.3	☐
☐	73	4	64-QAM	64-QAM	16-QAM	QPSK	175.5	195	☐
☐	74	4	64-QAM	64-QAM	16-QAM	16-QAM	195	216.7	☐
☐	75	4	64-QAM	64-QAM	64-QAM	QPSK	195	216.7	☐
☐	76	4	64-QAM	64-QAM	64-QAM	16-QAM	214.5	238.3	☐

DATA RATE									
802.11n HT40									
Available for EUT	MCS Index	Spatial streams	Modulation				Data Rate (Mbps)		Worst Case Modulation
							(GI = 800ns)	(GI = 400ns)	
☑	0	1	BPSK				13	15	☑
☑	1	1	QPSK				27	30	☐
☑	2	1	QPSK				40.5	45	☐
☑	3	1	16-QAM				54	60	☐
☑	4	1	16-QAM				81	90	☐
☑	5	1	64-QAM				108	120	☐
☑	6	1	64-QAM				121.5	135	☐
☑	7	1	64-QAM				135	150	☐
☑	8	2	BPSK				27	30	☑
☑	9	2	QPSK				54	60	☐
☑	10	2	QPSK				81	90	☐
☑	11	2	16-QAM				108	120	☐
☑	12	2	16-QAM				162	180	☐
☑	13	2	64-QAM				216	240	☐
☑	14	2	64-QAM				243	270	☐
☑	15	2	64-QAM				270	300	☐
☐	16	3	BPSK				40.5	45	☐
☐	17	3	QPSK				81	90	☐
☐	18	3	QPSK				121.5	135	☐
☐	19	3	16-QAM				162	180	☐
☐	20	3	16-QAM				243	270	☐
☐	21	3	64-QAM				324	360	☐
☐	22	3	64-QAM				364.5	405	☐
☐	23	3	64-QAM				405	450	☐
☐	24	4	BPSK				54	60	☐
☐	25	4	QPSK				108	120	☐
☐	26	4	QPSK				162	180	☐
☐	27	4	16-QAM				216	240	☐
☐	28	4	16-QAM				324	360	☐
☐	29	4	64-QAM				432	480	☐
☐	30	4	64-QAM				486	540	☐
☐	31	4	64-QAM				540	600	☐
☐	32	1	BPSK	-	-	-	6.0	6.7	☐
☐	33	2	16-QAM	QPSK	-	-	81	90.0	☐
☐	34	2	64-QAM	QPSK	-	-	108	120	☐
☐	35	2	64-QAM	16-QAM	-	-	135	150	☐
☐	36	2	16-QAM	QPSK	-	-	121.5	135	☐
☐	37	2	64-QAM	QPSK	-	-	162	180	☐
☐	38	2	64-QAM	16-QAM	-	-	202.5	225	☐
☐	39	3	16-QAM	QPSK	QPSK	-	108	120	☐
☐	40	3	16-QAM	16-QAM	QPSK	-	135	150	☐
☐	41	3	64-QAM	QPSK	QPSK	-	135	150	☐
☐	42	3	64-QAM	16-QAM	QPSK	-	162	180	☐
☐	43	3	64-QAM	16-QAM	16-QAM	-	189	210	☐
☐	44	3	64-QAM	64-QAM	QPSK	-	189	210	☐
☐	45	3	64-QAM	64-QAM	16-QAM	-	216	240	☐
☐	46	3	16-QAM	QPSK	QPSK	-	162	180	☐
☐	47	3	16-QAM	16-QAM	QPSK	-	202.5	225	☐
☐	48	3	64-QAM	QPSK	QPSK	-	202.5	225	☐
☐	49	3	64-QAM	16-QAM	QPSK	-	243	270	☐
☐	50	3	64-QAM	16-QAM	16-QAM	-	283.5	315	☐
☐	51	3	64-QAM	64-QAM	QPSK	-	283.5	315	☐
☐	52	3	64-QAM	64-QAM	16-QAM	-	324	360	☐
☐	53	4	16-QAM	QPSK	QPSK	QPSK	135	150	☐
☐	54	4	16-QAM	16-QAM	QPSK	QPSK	162	180	☐
☐	55	4	16-QAM	16-QAM	16-QAM	QPSK	189	210	☐
☐	56	4	64-QAM	QPSK	QPSK	QPSK	162	180	☐
☐	57	4	64-QAM	16-QAM	QPSK	QPSK	189	210	☐
☐	58	4	64-QAM	16-QAM	16-QAM	QPSK	216	240	☐
☐	59	4	64-QAM	16-QAM	16-QAM	16-QAM	243	270	☐
☐	60	4	64-QAM	QPSK	QPSK	QPSK	216	240	☐
☐	61	4	64-QAM	16-QAM	16-QAM	QPSK	243	270	☐
☐	62	4	64-QAM	16-QAM	16-QAM	16-QAM	270	300	☐
☐	63	4	64-QAM	64-QAM	64-QAM	QPSK	270	300	☐
☐	64	4	64-QAM	64-QAM	64-QAM	16-QAM	297	330	☐
☐	65	4	16-QAM	QPSK	QPSK	QPSK	202.5	225	☐
☐	66	4	16-QAM	16-QAM	QPSK	QPSK	243	270	☐
☐	67	4	16-QAM	16-QAM	16-QAM	QPSK	283.5	315	☐
☐	68	4	64-QAM	QPSK	QPSK	QPSK	243	270	☐
☐	69	4	64-QAM	16-QAM	QPSK	QPSK	283.5	315	☐
☐	70	4	64-QAM	16-QAM	16-QAM	QPSK	324	360	☐
☐	71	4	64-QAM	16-QAM	16-QAM	16-QAM	364.5	405	☐
☐	72	4	64-QAM	64-QAM	QPSK	QPSK	324	360	☐
☐	73	4	64-QAM	64-QAM	16-QAM	QPSK	364.5	405	☐
☐	74	4	64-QAM	64-QAM	16-QAM	16-QAM	405	450	☐
☐	75	4	64-QAM	64-QAM	64-QAM	QPSK	405	450	☐
☐	76	4	64-QAM	64-QAM	64-QAM	16-QAM	445.5	495	☐

DATA RATE: 802.11ac VHT20							
Available for EUT	MCS Index	Nbr of spatial streams	Modulation (Stream 1/2/3/4)	Coding rate	GI = 800ns	GI = 400ns	Worst Case Modulation
☑	0	1	BPSK	1/2	6,5	7,2	☑
☑	1	1	QPSK	1/2	13	14,4	☐
☑	2	1	QPSK	3/4	19,5	21,7	☐
☑	3	1	16-QAM	1/2	26	28,9	☐
☑	4	1	16-QAM	3/4	39	43,3	☐
☑	5	1	64-QAM	2/3	52	57,8	☐
☑	6	1	64-QAM	3/4	58,5	65	☐
☑	7	1	64-QAM	5/6	65	72,2	☐
☑	8	1	256-QAM	3/4	78	86,7	☐
☑	9	1	256-QAM	5/6	N/A	N/A	☐
☑	10	2	BPSK	1/2	13	14,4	☑
☑	11	2	QPSK	1/2	26	28,8	☐
☑	12	2	QPSK	3/4	39	43,4	☐
☑	13	2	16-QAM	1/2	52	57,8	☐
☑	14	2	16-QAM	3/4	78	86,6	☐
☑	15	2	64-QAM	2/3	104	115,6	☐
☑	16	2	64-QAM	3/4	117	130	☐
☑	17	2	64-QAM	5/6	130	144,4	☐
☑	18	2	256-QAM	3/4	156	173,4	☐
☑	19	2	256-QAM	5/6	N/A	N/A	☐
☐	20	3	BPSK	1/2	19,5	21,6	☐
☐	21	3	QPSK	1/2	39	43,2	☐
☐	22	3	QPSK	3/4	58,5	65,1	☐
☐	23	3	16-QAM	1/2	78	86,7	☐
☐	24	3	16-QAM	3/4	117	129,9	☐
☐	25	3	64-QAM	2/3	156	173,4	☐
☐	26	3	64-QAM	3/4	175,5	195	☐
☐	27	3	64-QAM	5/6	195	216,6	☐
☐	28	3	256-QAM	3/4	234	260,1	☐
☐	29	3	256-QAM	5/6	N/A	N/A	☐
☐	30	4	BPSK	1/2	26	28,8	☐
☐	31	4	QPSK	1/2	52	57,6	☐
☐	32	4	QPSK	3/4	78	86,8	☐
☐	33	4	16-QAM	1/2	104	115,6	☐
☐	34	4	16-QAM	3/4	156	173,2	☐
☐	35	4	64-QAM	2/3	208	231,2	☐
☐	36	4	64-QAM	3/4	234	260	☐
☐	37	4	64-QAM	5/6	260	288,8	☐
☐	38	4	256-QAM	3/4	312	346,8	☐
☐	39	4	256-QAM	5/6	N/A	N/A	☐
☐	40	5	BPSK	1/2	32,5	36	☐
☐	41	5	QPSK	1/2	65	72	☐
☐	42	5	QPSK	3/4	97,5	108,5	☐
☐	43	5	16-QAM	1/2	130	144,5	☐
☐	44	5	16-QAM	3/4	195	216,5	☐
☐	45	5	64-QAM	2/3	260	289	☐
☐	46	5	64-QAM	3/4	292,5	325	☐
☐	47	5	64-QAM	5/6	325	361	☐
☐	48	5	256-QAM	3/4	390	433,5	☐
☐	49	5	256-QAM	5/6	N/A	N/A	☐
☐	50	6	BPSK	1/2	39	43,2	☐
☐	51	6	QPSK	1/2	78	86,4	☐
☐	52	6	QPSK	3/4	117	130,2	☐
☐	53	6	16-QAM	1/2	156	173,4	☐
☐	54	6	16-QAM	3/4	234	259,8	☐
☐	55	6	64-QAM	2/3	312	346,8	☐
☐	56	6	64-QAM	3/4	351	390	☐
☐	57	6	64-QAM	5/6	390	433,2	☐
☐	58	6	256-QAM	3/4	468	520,2	☐
☐	59	6	256-QAM	5/6	N/A	N/A	☐
☐	60	7	BPSK	1/2	45,5	50,4	☐
☐	61	7	QPSK	1/2	91	100,8	☐
☐	62	7	QPSK	3/4	136,5	151,9	☐
☐	63	7	16-QAM	1/2	182	202,3	☐
☐	64	7	16-QAM	3/4	273	303,1	☐
☐	65	7	64-QAM	2/3	364	404,6	☐
☐	66	7	64-QAM	3/4	409,5	455	☐
☐	67	7	64-QAM	5/6	455	505,4	☐
☐	68	7	256-QAM	3/4	546	606,9	☐
☐	69	7	256-QAM	5/6	N/A	N/A	☐
☐	70	8	BPSK	1/2	52	57,6	☐
☐	71	8	QPSK	1/2	104	115,2	☐
☐	72	8	QPSK	3/4	156	173,6	☐
☐	73	8	16-QAM	1/2	208	231,2	☐
☐	74	8	16-QAM	3/4	312	346,4	☐
☐	75	8	64-QAM	2/3	416	462,4	☐
☐	76	8	64-QAM	3/4	468	520	☐
☐	77	8	64-QAM	5/6	520	577,6	☐
☐	78	8	256-QAM	3/4	624	693,6	☐
☐	79	8	256-QAM	5/6	N/A	N/A	☐

DATA RATE: 802.11ac VHT40							
Available for EUT	MCS Index	Nbr of spatial streams	Modulation (Stream 1/2/3/4)	Coding rate	GI = 800ns	GI = 400ns	Worst Case Modulation
☑	0	1	BPSK	1/2	13,5	15	☑
☑	1	1	QPSK	1/2	27	30	☐
☑	2	1	QPSK	3/4	40,5	45	☐
☑	3	1	16-QAM	1/2	54	60	☐
☑	4	1	16-QAM	3/4	81	90	☐
☑	5	1	64-QAM	2/3	108	120	☐
☑	6	1	64-QAM	3/4	121,5	135	☐
☑	7	1	64-QAM	5/6	135	150	☐
☑	8	1	256-QAM	3/4	162	180	☐
☑	9	1	256-QAM	5/6	180	200	☐
☑	10	2	BPSK	1/2	27	30	☑
☑	11	2	QPSK	1/2	54	60	☐
☑	12	2	QPSK	3/4	81	90	☐
☑	13	2	16-QAM	1/2	108	120	☐
☑	14	2	16-QAM	3/4	162	180	☐
☑	15	2	64-QAM	2/3	216	240	☐
☑	16	2	64-QAM	3/4	243	270	☐
☑	17	2	64-QAM	5/6	270	300	☐
☑	18	2	256-QAM	3/4	324	360	☐
☑	19	2	256-QAM	5/6	360	400	☐
☐	20	3	BPSK	1/2	40,5	45	☐
☐	21	3	QPSK	1/2	81	90	☐
☐	22	3	QPSK	3/4	121,5	135	☐
☐	23	3	16-QAM	1/2	162	180	☐
☐	24	3	16-QAM	3/4	243	270	☐
☐	25	3	64-QAM	2/3	324	360	☐
☐	26	3	64-QAM	3/4	364,5	405	☐
☐	27	3	64-QAM	5/6	405	450	☐
☐	28	3	256-QAM	3/4	486	540	☐
☐	29	3	256-QAM	5/6	540	600	☐
☐	30	4	BPSK	1/2	54	60	☐
☐	31	4	QPSK	1/2	108	120	☐
☐	32	4	QPSK	3/4	162	180	☐
☐	33	4	16-QAM	1/2	216	240	☐
☐	34	4	16-QAM	3/4	324	360	☐
☐	35	4	64-QAM	2/3	432	480	☐
☐	36	4	64-QAM	3/4	486	540	☐
☐	37	4	64-QAM	5/6	540	600	☐
☐	38	4	256-QAM	3/4	648	720	☐
☐	39	4	256-QAM	5/6	720	800	☐
☐	40	5	BPSK	1/2	67,5	75	☐
☐	41	5	QPSK	1/2	135	150	☐
☐	42	5	QPSK	3/4	202,5	225	☐
☐	43	5	16-QAM	1/2	270	300	☐
☐	44	5	16-QAM	3/4	405	450	☐
☐	45	5	64-QAM	2/3	540	600	☐
☐	46	5	64-QAM	3/4	607,5	675	☐
☐	47	5	64-QAM	5/6	675	750	☐
☐	48	5	256-QAM	3/4	810	900	☐
☐	49	5	256-QAM	5/6	900	1000	☐
☐	50	6	BPSK	1/2	81	90	☐
☐	51	6	QPSK	1/2	162	180	☐
☐	52	6	QPSK	3/4	243	270	☐
☐	53	6	16-QAM	1/2	324	360	☐
☐	54	6	16-QAM	3/4	486	540	☐
☐	55	6	64-QAM	2/3	648	720	☐
☐	56	6	64-QAM	3/4	729	810	☐
☐	57	6	64-QAM	5/6	810	900	☐
☐	58	6	256-QAM	3/4	972	1080	☐
☐	59	6	256-QAM	5/6	1080	1200	☐
☐	60	7	BPSK	1/2	94,5	105	☐
☐	61	7	QPSK	1/2	189	210	☐
☐	62	7	QPSK	3/4	283,5	315	☐
☐	63	7	16-QAM	1/2	378	420	☐
☐	64	7	16-QAM	3/4	567	630	☐
☐	65	7	64-QAM	2/3	756	840	☐
☐	66	7	64-QAM	3/4	850,5	945	☐
☐	67	7	64-QAM	5/6	945	1050	☐
☐	68	7	256-QAM	3/4	1134	1260	☐
☐	69	7	256-QAM	5/6	1260	1400	☐
☐	70	8	BPSK	1/2	108	120	☐
☐	71	8	QPSK	1/2	216	240	☐
☐	72	8	QPSK	3/4	324	360	☐
☐	73	8	16-QAM	1/2	432	480	☐
☐	74	8	16-QAM	3/4	648	720	☐
☐	75	8	64-QAM	2/3	864	960	☐
☐	76	8	64-QAM	3/4	972	1080	☐
☐	77	8	64-QAM	5/6	1080	1200	☐
☐	78	8	256-QAM	3/4	1296	1440	☐
☐	79	8	256-QAM	5/6	1440	1600	☐

DATA RATE: 802.11ac VHT80							
Available for EUT	MCS Index	Nbr of spatial streams	Modulation (Stream 1/2/3/4)	Coding rate	GI = 800ns	GI = 400ns	Worst Case Modulation
☑	0	1	BPSK	1/2	29.3	32.5	☑
☑	1	1	QPSK	1/2	58.5	65	☐
☑	2	1	QPSK	3/4	87.8	97.5	☐
☑	3	1	16-QAM	1/2	117	130	☐
☑	4	1	16-QAM	3/4	175.5	195	☐
☑	5	1	64-QAM	2/3	234	260	☐
☑	6	1	64-QAM	3/4	263.3	292.5	☐
☑	7	1	64-QAM	5/6	292.5	325	☐
☑	8	1	256-QAM	3/4	351	390	☐
☑	9	1	256-QAM	5/6	390	433.3	☐
☑	10	2	BPSK	1/2	58.6	65	☑
☑	11	2	QPSK	1/2	117	130	☐
☑	12	2	QPSK	3/4	175.6	195	☐
☑	13	2	16-QAM	1/2	234	260	☐
☑	14	2	16-QAM	3/4	351	390	☐
☑	15	2	64-QAM	2/3	468	520	☐
☑	16	2	64-QAM	3/4	526.6	585	☐
☑	17	2	64-QAM	5/6	585	650	☐
☑	18	2	256-QAM	3/4	702	780	☐
☑	19	2	256-QAM	5/6	780	866.6	☐
☐	20	3	BPSK	1/2	87.9	97.5	☐
☐	21	3	QPSK	1/2	175.5	195	☐
☐	22	3	QPSK	3/4	263.4	292.5	☐
☐	23	3	16-QAM	1/2	351	390	☐
☐	24	3	16-QAM	3/4	526.5	585	☐
☐	25	3	64-QAM	2/3	702	780	☐
☐	26	3	64-QAM	3/4	789.9	877.5	☐
☐	27	3	64-QAM	5/6	877.5	975	☐
☐	28	3	256-QAM	3/4	1053	1170	☐
☐	29	3	256-QAM	5/6	1170	1299.9	☐
☐	30	4	BPSK	1/2	117.2	130	☐
☐	31	4	QPSK	1/2	234	260	☐
☐	32	4	QPSK	3/4	351.2	390	☐
☐	33	4	16-QAM	1/2	468	520	☐
☐	34	4	16-QAM	3/4	702	780	☐
☐	35	4	64-QAM	2/3	936	1040	☐
☐	36	4	64-QAM	3/4	1053.2	1170	☐
☐	37	4	64-QAM	5/6	1170	1300	☐
☐	38	4	256-QAM	3/4	1404	1560	☐
☐	39	4	256-QAM	5/6	1560	1733.2	☐
☐	40	5	BPSK	1/2	146.5	162.5	☐
☐	41	5	QPSK	1/2	292.5	325	☐
☐	42	5	QPSK	3/4	439	487.5	☐
☐	43	5	16-QAM	1/2	585	650	☐
☐	44	5	16-QAM	3/4	877.5	975	☐
☐	45	5	64-QAM	2/3	1170	1300	☐
☐	46	5	64-QAM	3/4	1316.5	1462.5	☐
☐	47	5	64-QAM	5/6	1462.5	1625	☐
☐	48	5	256-QAM	3/4	1755	1950	☐
☐	49	5	256-QAM	5/6	1950	2166.5	☐
☐	50	6	BPSK	1/2	175.8	195	☐
☐	51	6	QPSK	1/2	351	390	☐
☐	52	6	QPSK	3/4	526.8	585	☐
☐	53	6	16-QAM	1/2	702	780	☐
☐	54	6	16-QAM	3/4	1053	1170	☐
☐	55	6	64-QAM	2/3	1404	1560	☐
☐	56	6	64-QAM	3/4	1579.8	1755	☐
☐	57	6	64-QAM	5/6	1755	1950	☐
☐	58	6	256-QAM	3/4	2106	2340	☐
☐	59	6	256-QAM	5/6	2340	2599.8	☐
☐	60	7	BPSK	1/2	205.1	227.5	☐
☐	61	7	QPSK	1/2	409.5	455	☐
☐	62	7	QPSK	3/4	614.6	682.5	☐
☐	63	7	16-QAM	1/2	819	910	☐
☐	64	7	16-QAM	3/4	1228.5	1365	☐
☐	65	7	64-QAM	2/3	1638	1820	☐
☐	66	7	64-QAM	3/4	1843.1	2047.5	☐
☐	67	7	64-QAM	5/6	2047.5	2275	☐
☐	68	7	256-QAM	3/4	2457	2730	☐
☐	69	7	256-QAM	5/6	2730	3033.1	☐
☐	70	8	BPSK	1/2	234.4	260	☐
☐	71	8	QPSK	1/2	468	520	☐
☐	72	8	QPSK	3/4	702.4	780	☐
☐	73	8	16-QAM	1/2	936	1040	☐
☐	74	8	16-QAM	3/4	1404	1560	☐
☐	75	8	64-QAM	2/3	1872	2080	☐
☐	76	8	64-QAM	3/4	2106.4	2340	☐
☐	77	8	64-QAM	5/6	2340	2600	☐
☐	78	8	256-QAM	3/4	2808	3120	☐
☐	79	8	256-QAM	5/6	3120	3466.4	☐

2.2. RUNNING MODE

The EUT is set in the following modes during tests:
- Emission-reception with a duty cycle above 17% in the data rate that produced the highest output power

The product is capable of simultaneous emission in WIFI (2.4GHz or 5GHz) and Bluetooth (EDR or LE).

Following commands with the specific test software “Teraterm” are used to set the product:
- See document :” LCIE_Radio tests_UIW4010ECH_v4.docx” for the commands used during test.

-System testings is performed with iperf test software in udp mode from the Master Device to the Client Device on the test channel. The data traffic is performed Laptop 2 to Laptop 1

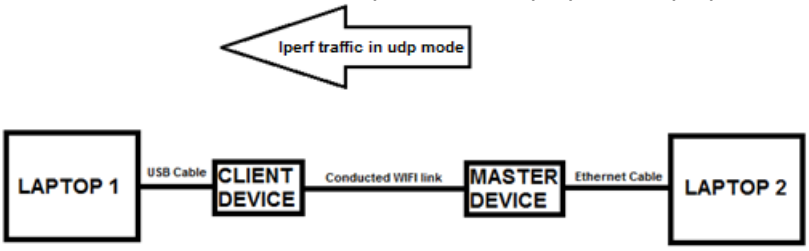

2.3. EQUIPMENT MODIFICATION

☑ None ☐ Modification:

3. DFS DETECTION THRESHOLDS DETERMINATION, REFERENCE NOISE LEVEL & CHANNEL LOADING

3.1. TEST CONDITIONS

Test performed by : Mathieu CERISIER
Date of test : September 28, 2016
Ambient temperature : 29 °C
Relative humidity : 42 %

3.2. TEST SETUP

- The Equipment Under Test is:
☑ On a table
☐ In an anechoic chamber

- Measurement is performed with a spectrum analyzer:
☑ On the EUT conducted access
☐ On the EUT with a test fixture

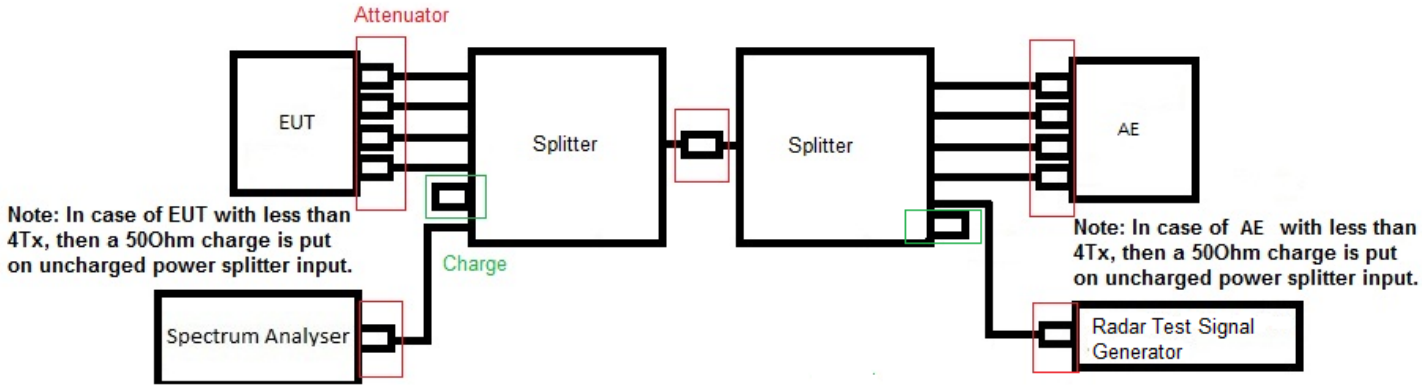

3.3. TEST EQUIPMENT LIST

DESCRIPTION	MANUFACTURER	MODEL	N° LCIE	Cal_Date	Cal_Due
Multi-meter	KEITHLEY	2000	A1241084	2016/05	2018/05
EMI receiver/ Spectrum analyzer	ROHDE & SCHWARZ	ESR 7	A2642023	2016/05	2018/05
RF cable	Télédyne	920-0202-024	A5329663	2016/05	2018/05
RF cable	Télédyne	920-0202-024	A5329664	2016/05	2018/05
RF cable	Télédyne	920-0202-024	A5329665	2016/05	2018/05
RF cable	Télédyne	920-0202-024	A5329668	2016/05	2018/05
RF cable	Télédyne	920-0202-024	A5329669	2016/05	2018/05
RF cable	Télédyne	920-0202-024	A5329670	2016/05	2018/05
RF cable	Télédyne	920-0202-024	A5329672	2016/05	2018/05
RF cable	Télédyne	920-0202-024	A5329673	2016/05	2018/05
Vector signal generator	ROHDE & SCHWARZ	SMJ100A	A5444007	Verified with calibrated EMI receiver/ Spectrum analyzer before testing	
Programmable AC/DC power supply	KIKUSUI	PCR500M	A7040079	Verified with calibrated multimeter before testing	
Attenuator 10dB	MINI CIRCUITS	BW-S10W2+	A7122229	2016/05	2018/05
Attenuator 10dB	MINI CIRCUITS	BW-S10W2+	A7122230	2016/05	2018/05
RF cable & Attenuator 20dB	Télédyne & MINI CIRCUITS	920-0202-024 & FW-20+	A5329661	2016/05	2018/05
RF cable & Attenuator 20dB	Télédyne & MINI CIRCUITS	920-0202-024 & FW-20+	A5329676	2016/05	2018/05
RF cable & Attenuator 20dB	Télédyne & MINI CIRCUITS	920-0202-024 & FW-20+	A5329674	2016/05	2018/05
RF cable & Attenuator 20dB	Télédyne & MINI CIRCUITS	920-0202-024 & FW-20+	A5329675	2016/05	2018/05
Attenuator 3dB	MINI CIRCUITS	BW-S3W2+	A7122238	2016/05	2018/05
Attenuator 3dB	MINI CIRCUITS	BW-S3W2+	A7122239	2016/05	2018/05
Attenuator 3dB	MINI CIRCUITS	BW-S3W2+	A7122240	2016/05	2018/05
Attenuator 3dB	MINI CIRCUITS	BW-S3W2+	A7122241	2016/05	2018/05
Attenuator 3dB	MINI CIRCUITS	BW-S3W2+	A7122242	2016/05	2018/05
Attenuator 3dB	MINI CIRCUITS	BW-S3W2+	A7122243	2016/05	2018/05
Power splitter	Mini-Circuits	ZN6PD-63W-S+	A7132040	2016/05	2018/05
Power splitter	Mini-Circuits	ZN6PD-63W-S+	A7132041	2016/05	2018/05
Load 50 ohms	Fairview Microwave	ST0635F	A7152075	2016/05	2018/05
Load 50 ohms	Fairview Microwave	ST0635F	A7152076	2016/05	2018/05
Load 50 ohms	Fairview Microwave	ST0635F	A7152077	2016/05	2018/05
Load 50 ohms	Fairview Microwave	ST0635F	A7152078	2016/05	2018/05

3.4. RESULTS

DFS Detection Thersholds Calibration
Channel C25
Type 0

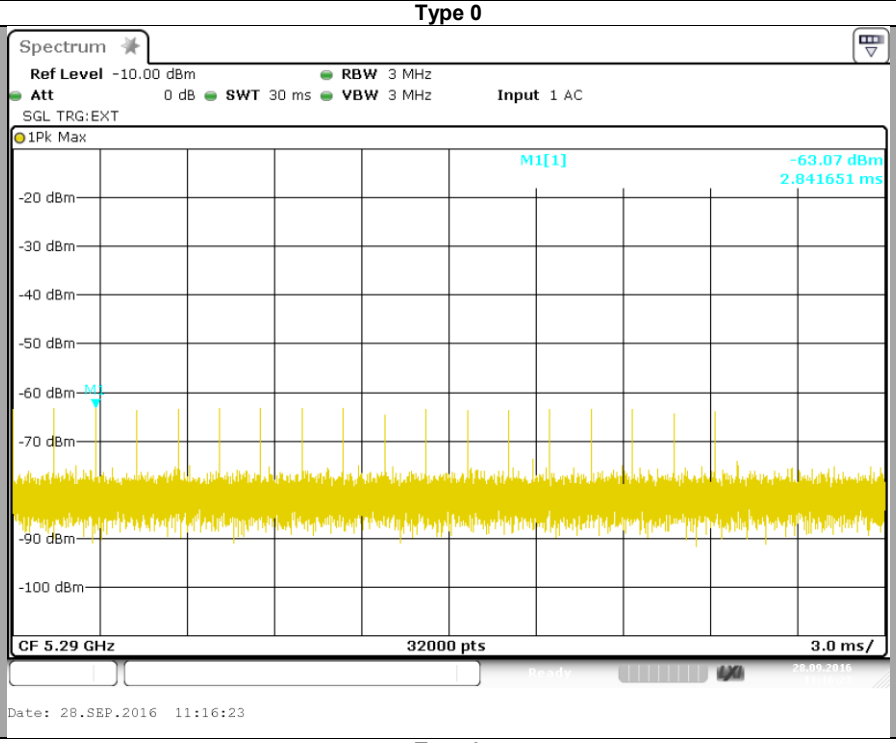

Type 0

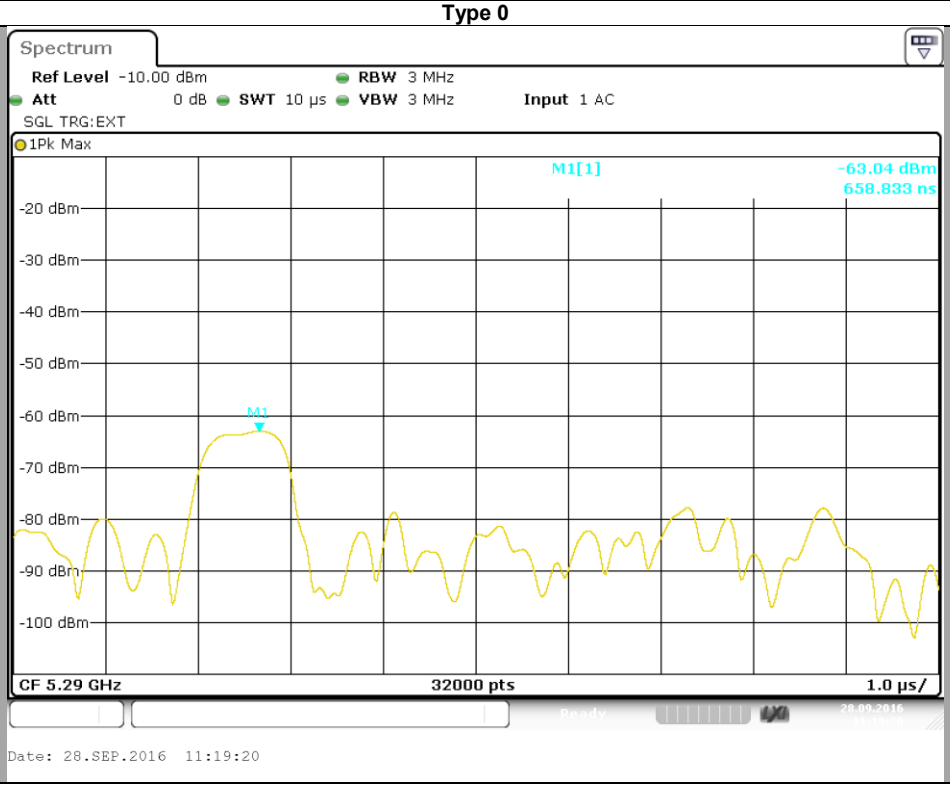

Reference Noise Level

Channel C25

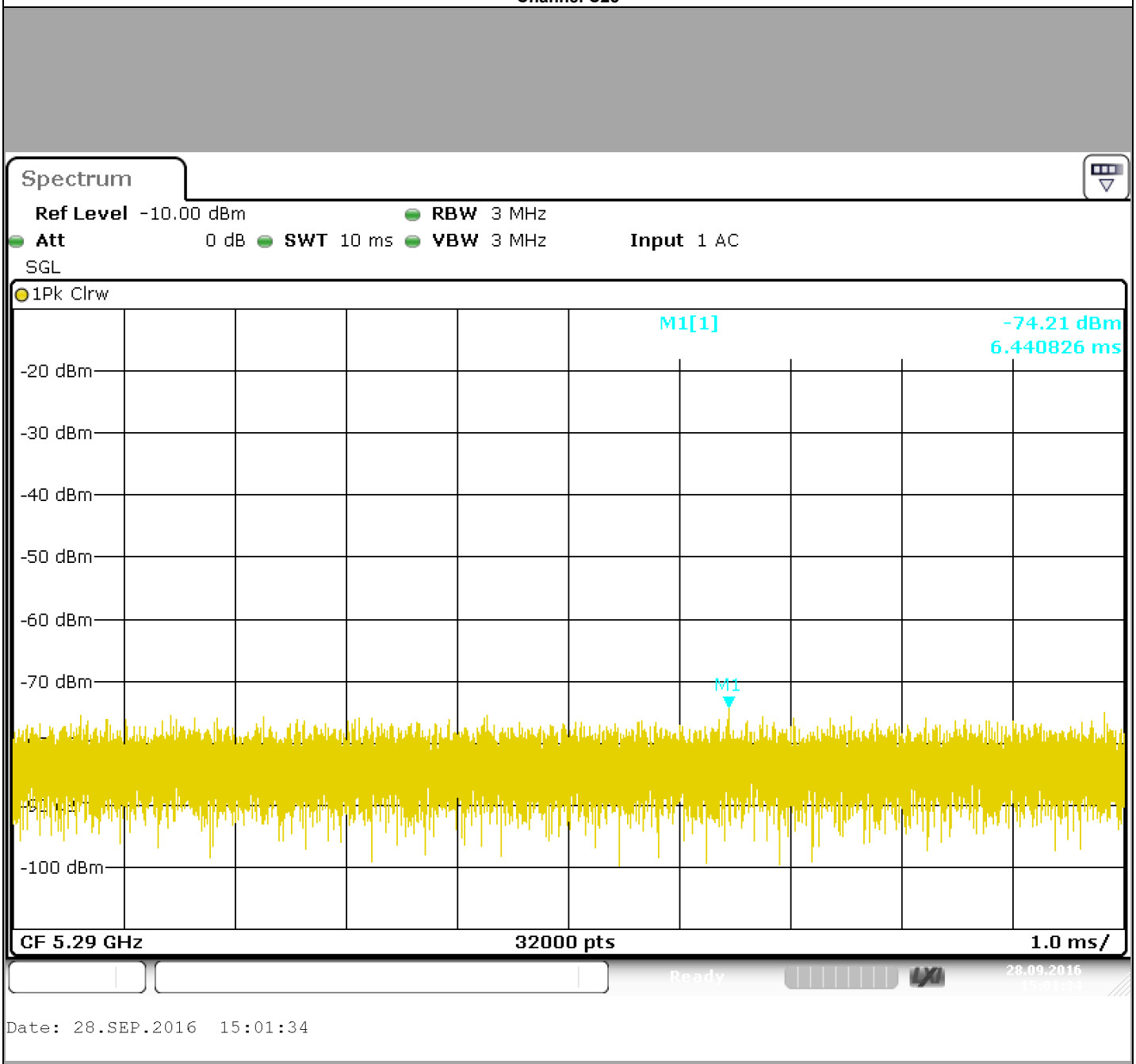

Client Level
Channel C25

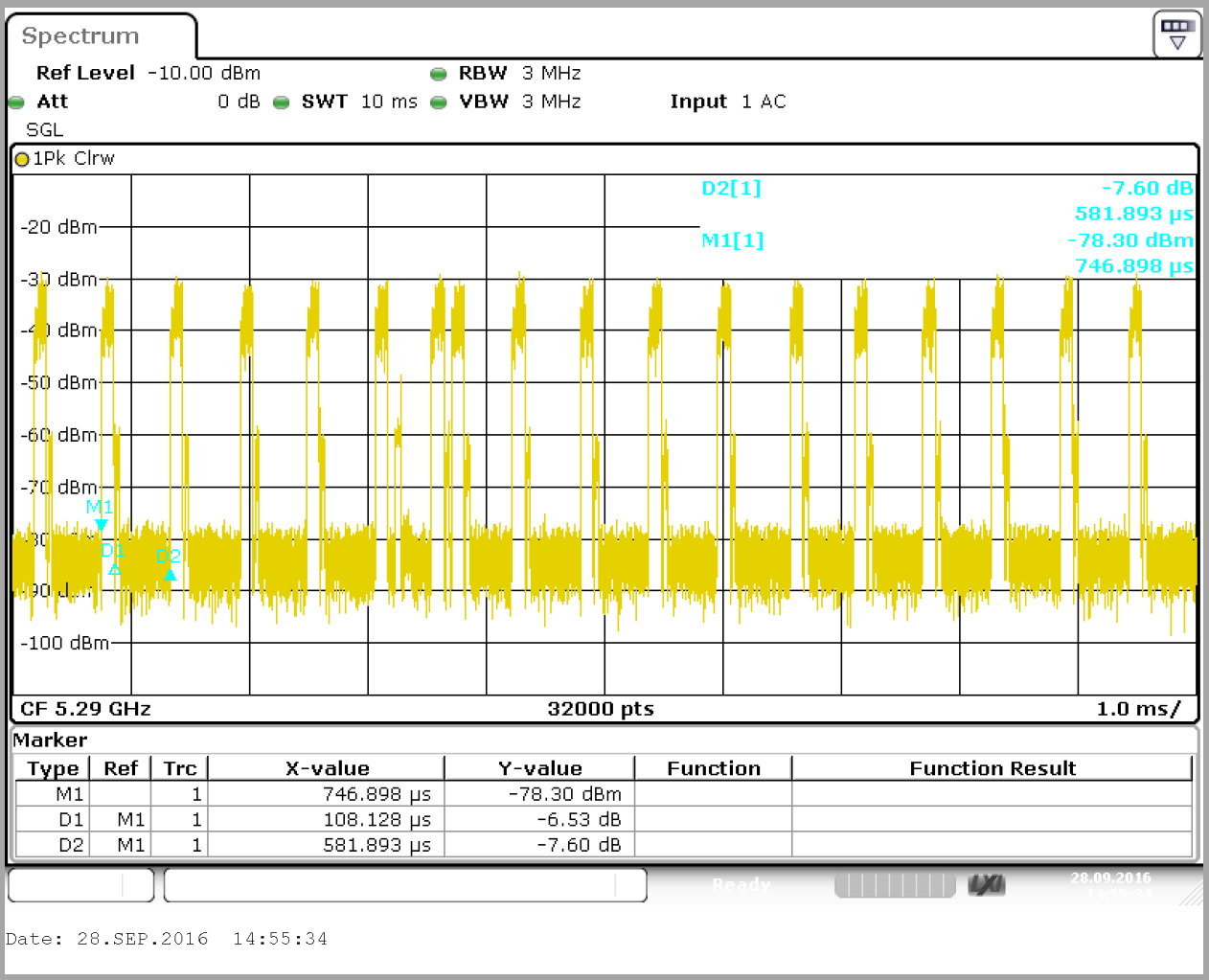

Temperature	**Tnom**
Voltage	**Vnom**
Channel	C25
Duty Cycle (%)	Over 17

Channel	**Channel**
EIRP (See test report from FCC ID: RRK2012060056-1)	338,065mW
DFS Detection thresholds applied	-64dBm
Additional Level (dB)	1
DFS Detection thresholds applied	-63dBm

4. DYNAMIC FREQUENCY SELECTION (DFS): CHANNEL CLOSING TRANSMISSION TIME & CHANNEL MOVE TIME

4.1. TEST CONDITIONS

Test performed by : Mathieu CERISIER
Date of test : September 29, 2016
Ambient temperature : 23 °C
Relative humidity : 44 %

4.2. TEST SETUP

- The Equipment Under Test is:
☑ On a table
☐ In an anechoic chamber

- Measurement is performed with a spectrum analyzer:
☑ On the EUT conducted access
☐ On the EUT with a test fixture

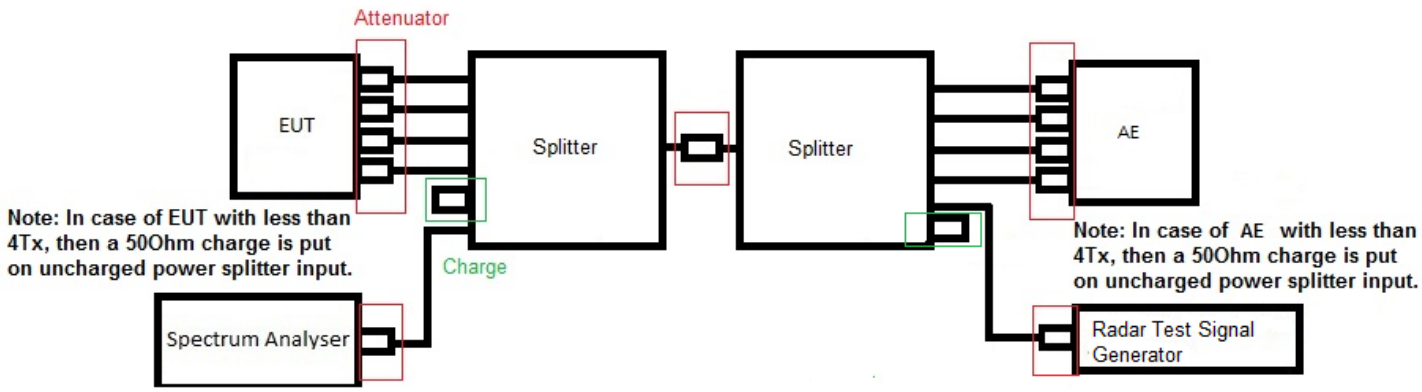

4.3. LIMIT

Channel Closing Transmission Time shall not exceed 0.26second
Channel Move Time shall not exceed 10seconds

4.4. TEST EQUIPMENT LIST

DESCRIPTION	MANUFACTURER	MODEL	N° LCIE	Cal_Date	Cal_Due
Multi-meter	KEITHLEY	2000	A1241084	2016/05	2018/05
EMI receiver/ Spectrum analyzer	ROHDE & SCHWARZ	ESR 7	A2642023	2016/05	2018/05
RF cable	Télédyne	920-0202-024	A5329663	2016/05	2018/05
RF cable	Télédyne	920-0202-024	A5329664	2016/05	2018/05
RF cable	Télédyne	920-0202-024	A5329665	2016/05	2018/05
RF cable	Télédyne	920-0202-024	A5329668	2016/05	2018/05
RF cable	Télédyne	920-0202-024	A5329669	2016/05	2018/05
RF cable	Télédyne	920-0202-024	A5329670	2016/05	2018/05
RF cable	Télédyne	920-0202-024	A5329672	2016/05	2018/05
RF cable	Télédyne	920-0202-024	A5329673	2016/05	2018/05
Vector signal generator	ROHDE & SCHWARZ	SMJ100A	A5444007	Verified with calibrated EMI receiver/ Spectrum analyzer before testing	
Programmable AC/DC power supply	KIKUSUI	PCR500M	A7040079	Verified with calibrated multimeter before testing	
Attenuator 10dB	MINI CIRCUITS	BW-S10W2+	A7122229	2016/05	2018/05
Attenuator 10dB	MINI CIRCUITS	BW-S10W2+	A7122230	2016/05	2018/05
RF cable & Attenuator 20dB	Télédyne & MINI CIRCUITS	920-0202-024 & FW-20+	A5329661	2016/05	2018/05
RF cable & Attenuator 20dB	Télédyne & MINI CIRCUITS	920-0202-024 & FW-20+	A5329676	2016/05	2018/05
RF cable & Attenuator 20dB	Télédyne & MINI CIRCUITS	920-0202-024 & FW-20+	A5329674	2016/05	2018/05
RF cable & Attenuator 20dB	Télédyne & MINI CIRCUITS	920-0202-024 & FW-20+	A5329675	2016/05	2018/05
Attenuator 3dB	MINI CIRCUITS	BW-S3W2+	A7122238	2016/05	2018/05
Attenuator 3dB	MINI CIRCUITS	BW-S3W2+	A7122239	2016/05	2018/05
Attenuator 3dB	MINI CIRCUITS	BW-S3W2+	A7122240	2016/05	2018/05
Attenuator 3dB	MINI CIRCUITS	BW-S3W2+	A7122241	2016/05	2018/05
Attenuator 3dB	MINI CIRCUITS	BW-S3W2+	A7122242	2016/05	2018/05
Attenuator 3dB	MINI CIRCUITS	BW-S3W2+	A7122243	2016/05	2018/05
Power splitter	Mini-Circuits	ZN6PD-63W-S+	A7132040	2016/05	2018/05
Power splitter	Mini-Circuits	ZN6PD-63W-S+	A7132041	2016/05	2018/05
Load 50 ohms	Fairview Microwave	ST0635F	A7152075	2016/05	2018/05
Load 50 ohms	Fairview Microwave	ST0635F	A7152076	2016/05	2018/05
Load 50 ohms	Fairview Microwave	ST0635F	A7152077	2016/05	2018/05
Load 50 ohms	Fairview Microwave	ST0635F	A7152078	2016/05	2018/05

4.5. DIVERGENCE, ADDITION OR SUPPRESSION ON THE TEST SPECIFICATION

☑ None ☐ Divergence:

4.6. RESULTS

Channel Closing Transmission Time & Channel Move Time	
802.11ac VHT80	
C5	

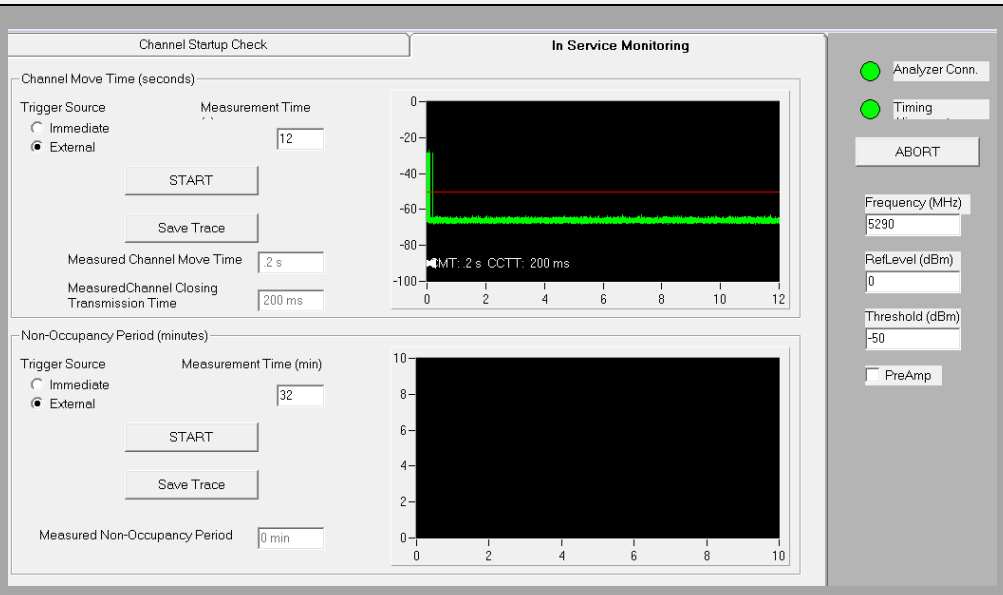

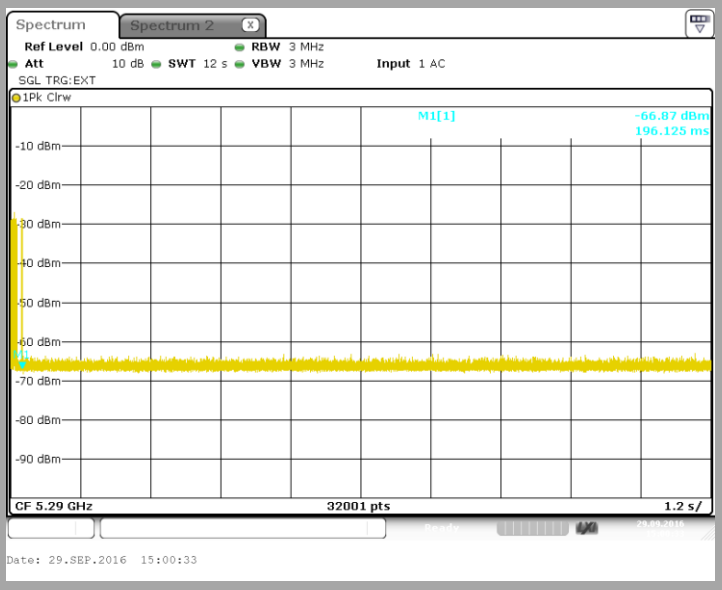

Channel Closing Transmission Time (s)	0.2
Channel Move Time (s)	0.2

4.7. CONCLUSION

Channel Closing Transmission Time & Channel Move Time measurement performed on the sample of the product **AirTV Player UIW4010ECH**, SN: **Sn 002**, in configuration and description presented in this test report, show levels **compliant** to the 47 CFR PART 15.407 & RSS 247 ISSUE 1 limits.

5. DYNAMIC FREQUENCY SELECTION (DFS): NON-OCCUPANCY PERIOD

5.1. TEST CONDITIONS

Test performed by : Mathieu CERISIER
Date of test : September 28, 2016
Ambient temperature : 26 °C
Relative humidity : 44 %

5.2. TEST SETUP

- The Equipment Under Test is:
☑ On a table
☐ In an anechoic chamber

- Measurement is performed with a spectrum analyzer:
☑ On the EUT conducted access
☐ On the EUT with a test fixture

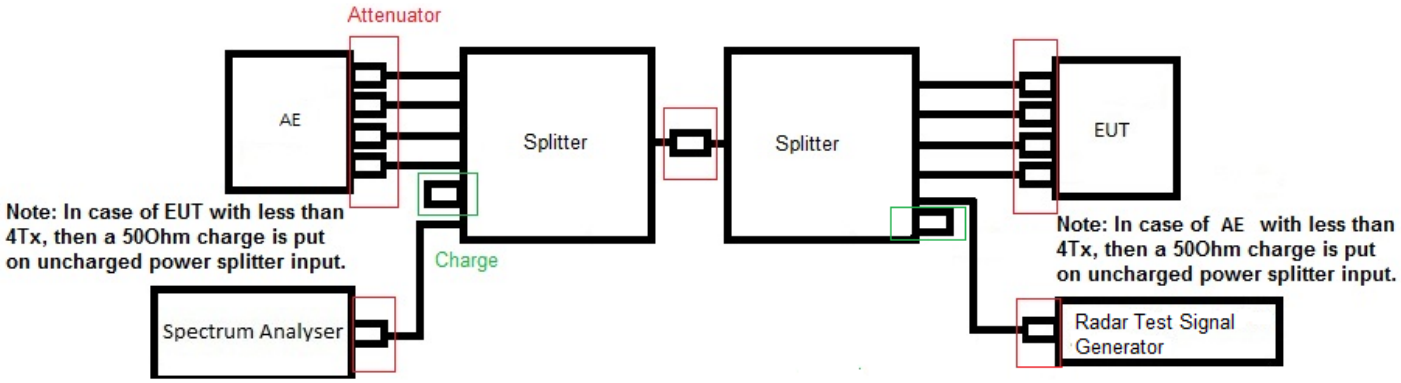

5.3. LIMIT

Non-Occupancy Period shall exceed 1800 seconds

5.4. TEST EQUIPMENT LIST

DESCRIPTION	MANUFACTURER	MODEL	N° LCIE	Cal_Date	Cal_Due
Multi-meter	KEITHLEY	2000	A1241084	2016/05	2018/05
EMI receiver/ Spectrum analyzer	ROHDE & SCHWARZ	ESR 7	A2642023	2016/05	2018/05
RF cable	Télédyne	920-0202-024	A5329663	2016/05	2018/05
RF cable	Télédyne	920-0202-024	A5329664	2016/05	2018/05
RF cable	Télédyne	920-0202-024	A5329665	2016/05	2018/05
RF cable	Télédyne	920-0202-024	A5329668	2016/05	2018/05
RF cable	Télédyne	920-0202-024	A5329669	2016/05	2018/05
RF cable	Télédyne	920-0202-024	A5329670	2016/05	2018/05
RF cable	Télédyne	920-0202-024	A5329672	2016/05	2018/05
RF cable	Télédyne	920-0202-024	A5329673	2016/05	2018/05
Vector signal generator	ROHDE & SCHWARZ	SMJ100A	A5444007	Verified with calibrated EMI receiver/ Spectrum analyzer before testing	
Programmable AC/DC power supply	KIKUSUI	PCR500M	A7040079	Verified with calibrated multimeter before testing	
Attenuator 10dB	MINI CIRCUITS	BW-S10W2+	A7122229	2016/05	2018/05
Attenuator 10dB	MINI CIRCUITS	BW-S10W2+	A7122230	2016/05	2018/05
RF cable & Attenuator 20dB	Télédyne & MINI CIRCUITS	920-0202-024 & FW-20+	A5329661	2016/05	2018/05
RF cable & Attenuator 20dB	Télédyne & MINI CIRCUITS	920-0202-024 & FW-20+	A5329676	2016/05	2018/05
RF cable & Attenuator 20dB	Télédyne & MINI CIRCUITS	920-0202-024 & FW-20+	A5329674	2016/05	2018/05
RF cable & Attenuator 20dB	Télédyne & MINI CIRCUITS	920-0202-024 & FW-20+	A5329675	2016/05	2018/05
Attenuator 3dB	MINI CIRCUITS	BW-S3W2+	A7122238	2016/05	2018/05
Attenuator 3dB	MINI CIRCUITS	BW-S3W2+	A7122239	2016/05	2018/05
Attenuator 3dB	MINI CIRCUITS	BW-S3W2+	A7122240	2016/05	2018/05
Attenuator 3dB	MINI CIRCUITS	BW-S3W2+	A7122241	2016/05	2018/05
Attenuator 3dB	MINI CIRCUITS	BW-S3W2+	A7122242	2016/05	2018/05
Attenuator 3dB	MINI CIRCUITS	BW-S3W2+	A7122243	2016/05	2018/05
Power splitter	Mini-Circuits	ZN6PD-63W-S+	A7132040	2016/05	2018/05
Power splitter	Mini-Circuits	ZN6PD-63W-S+	A7132041	2016/05	2018/05
Load 50 ohms	Fairview Microwave	ST0635F	A7152075	2016/05	2018/05
Load 50 ohms	Fairview Microwave	ST0635F	A7152076	2016/05	2018/05
Load 50 ohms	Fairview Microwave	ST0635F	A7152077	2016/05	2018/05
Load 50 ohms	Fairview Microwave	ST0635F	A7152078	2016/05	2018/05

5.5. DIVERGENCE, ADDITION OR SUPPRESSION ON THE TEST SPECIFICATION

☑ None ☐ Divergence:

5.6. RESULTS

Non Occupancy Period	
802.11ac VHT80	
C5	

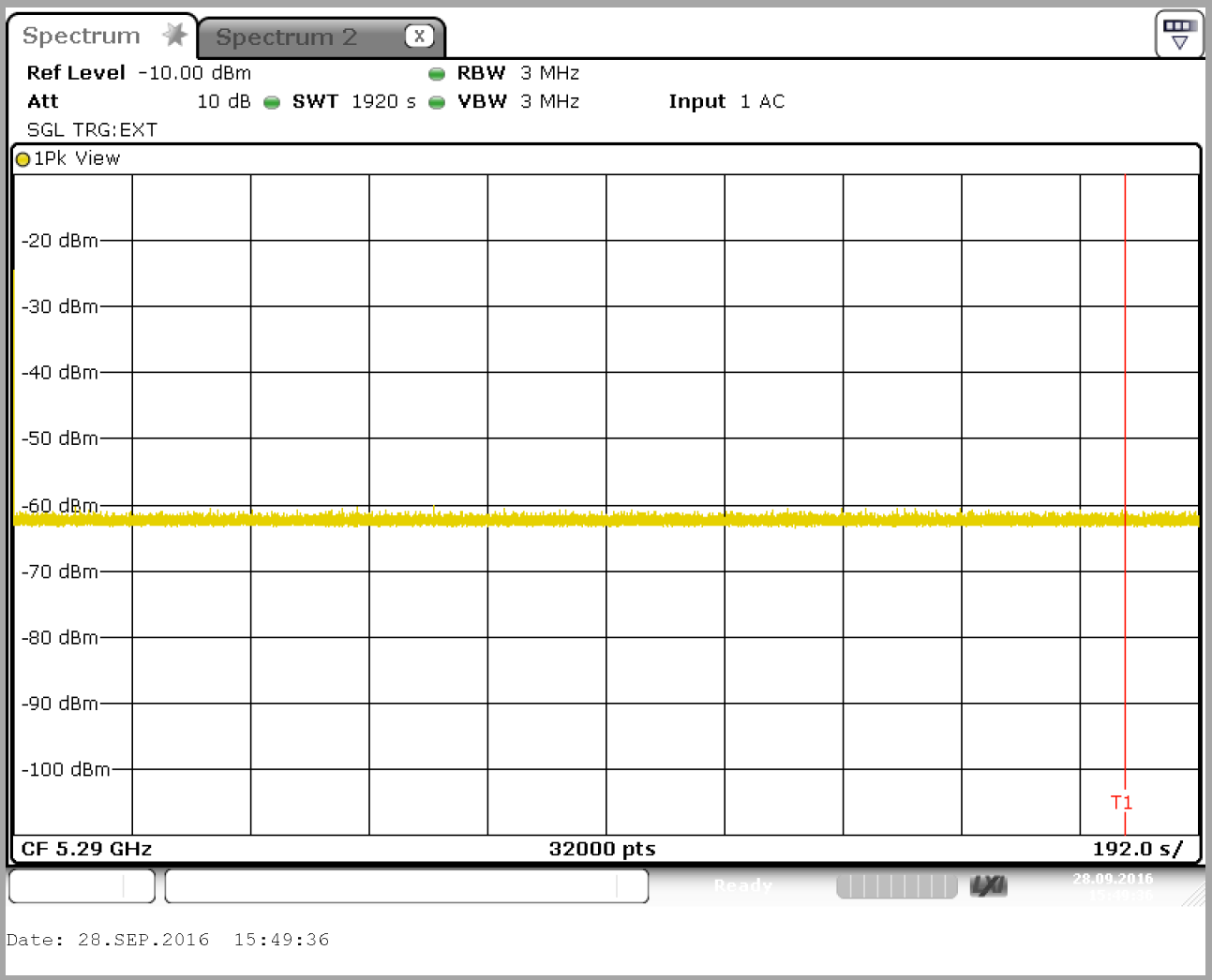

Non occupancy period (s)	>1800

5.7. CONCLUSION

Non-Occupancy period measurement performed on the sample of the product **AirTV Player UIW4010ECH**, SN: **Sn 002**, in configuration and description presented in this test report, show levels **compliant** to the 47 CFR PART 15.407 & RSS 247 ISSUE 1 limits.

6. ANNEX 3: RADAR TEST SIGNAL TYPE 5 & 0

TYPE 0		
Pulses per Burst	**Pulse Width (µsec)**	**PRI (µs)**
18	1	1428

7. UNCERTAINTIES CHART

47 CFR Part 15.209 & 15.207 Kind of test	Wide uncertainty laboratory (k=2) ±x(dB) / (Hz)/ ms	Uncertainty limit
Measurement of conducted disturbances in voltage on the AC power port (9 kHz – 150 kHz)	2,67	3.8
Measurement of conducted disturbances in voltage on the AC power port (150 kHz – 30 MHz)	2,67	3.4
Measurement of conducted disturbances in voltage on the telecommunication port. (AAN)	3,67	5.0
Measurement of conducted disturbances in current (current clamp)	2,73	2.9
Measurement of disturbance power	2,67	4.5
Measurement of radiated magnetic field from 10kHz to 30MHz in SAC V01	4,48	/
Measurement of radiated magnetic field from 10kHz to 30MHz in SAC C01	4,48	/
Measurement of radiated electric field from 30 to 1000MHz in horizontal position on the OATS (Ecuelles)	4,88	6.3
Measurement of radiated electric field from 1 to 18GHz on the Ecuelles site	5.16	/
Measurement of radiated electric field from 30 to 1000MHz in vertical position on the OATS (Ecuelles)	4,99	6.3
Measurement of radiated electric field from 30 to 1000MHz in horizontal position in SAC C01	5,08	6.3
Measurement of radiated electric field from 30 to 1000MHz in vertical position in SAC C01	5,16	6.3
Measurement of radiated electric field from 30 to 1000MHz in horizontal position in SAC V01	5,08	6.3
Measurement of radiated electric field from 30 to 1000MHz in vertical position in SAC V01	5,15	6.3
Measurement of radiated electric field from 1 to 6 GHz C01	5,1	5.2
Measurement of radiated electric field from 1 to 6 GHz V01	4,85	5.2
Measurement of radiated magnetic field from 10kHz to 30MHz on the OATS (Ecuelles)	4,48	/

The uncertainty values calculated by the laboratory are lower than limit uncertainty values defined by the CISPR. The conformity of the sample is directly established by the applicable limits values. This table includes all uncertainties maximum feasible for testing in the laboratory, whether or not made in this report