Wireless Device Over the Air Performance Data Summary

DATA NO.	:	**OQ483017B**
APPLICANT	:	**Vantiva USA LLC**
BRAND NAME	:	**Vantiva**
MODEL NAME	:	**VTER11QELxyzn (xyz: each character cab be a-z or A-Z; n: 1-4 or blank)**
ANTENNA TYPE	:	**Dipole Antenna**
TEST DATE(S)	:	**Sep. 30, 2024 ~ Nov. 07, 2024**

Reviewed by:

Feynman Liu

Feynman Liu / Vice Manager

Approved by:

Kevin Chu

Kevin Chu / Manager

Sporton International Inc. (Kunshan)

No. 1098, Pengxi North Road, Kunshan Economic Development Zone Jiangsu Province 215300 People's Republic of China

Table of Contents

Revision History ---------- **3**

1. Administration Data ---------- **4**

1.1 Testing Laboratory---------- 4

1.2 Applicant---------- 4

1.3 Manufacturer---------- 4

2. Basic Measurement Procedure ---------- **5**

3. Test Equipment List ---------- **6**

4. Summary of WLAN Uncorrelated gains ---------- **7**

5. Summary of WLAN Antenna Gain Test Results ---------- **7**

6. FS Pattern ---------- **8**

Appendix A. Test Results of Detailed Raw Data ----------**28**

Revision History

DATA NO.	VERSION	DESCRIPTION	ISSUED DATE
OQ483017B	1.0	Initial issue of data summary	Dec. 09, 2024

1. Administration Data

1.1 Testing Laboratory

Test Site	Sporton International Inc. (Kunshan)
Test Site Location	No. 1098, Pengxi North Road, Kunshan Economic Development Zone Jiangsu Province 215300 People's Republic of China TEL: +86-0512-5790-0158
Chamber	□ OTA01-KS □ OTA02-KS □ OTA03-KS ■ OTA04-KS □ OTA05-KS

■: Indicates the chamber(s) used in this test report.

1.2 Applicant

Company Name	Vantiva USA LLC
Address	4855 Peachtree Industrial Blvd. Suite 200 Norcross, Georgia 30092

1.3 Manufacturer

Company Name	Vantiva USA LLC
Address	4855 Peachtree Industrial Blvd. Suite 200 Norcross, Georgia 30092

2. Basic Measurement Procedure

The radiation pattern and antenna gain have been tested with a conventional far field anechoic chamber. There are two main parts to the measurement procedure; the phi-axis test and the theta-axis test.

For a far field anechoic chamber, the gain measurements shall be made within an RF anechoic chamber with at least 3-meter separation from the receive antenna to the device under test (DUT). The RF anechoic chamber must be lined with absorptive material rated as a minimum frequency range from 2.4GHz to 5.8GHz. The DUT with the antenna assemblies installed shall be placed on a non-conductive structure at a sufficient height to be in the 'quiet zone' of the chamber. All test equipment including horn antennas, adapters, cables, network analyzers, and receivers shall be calibrated per ISO17025's minimum calibration requirements. Detail setup for test chamber as below

Chamber diagram

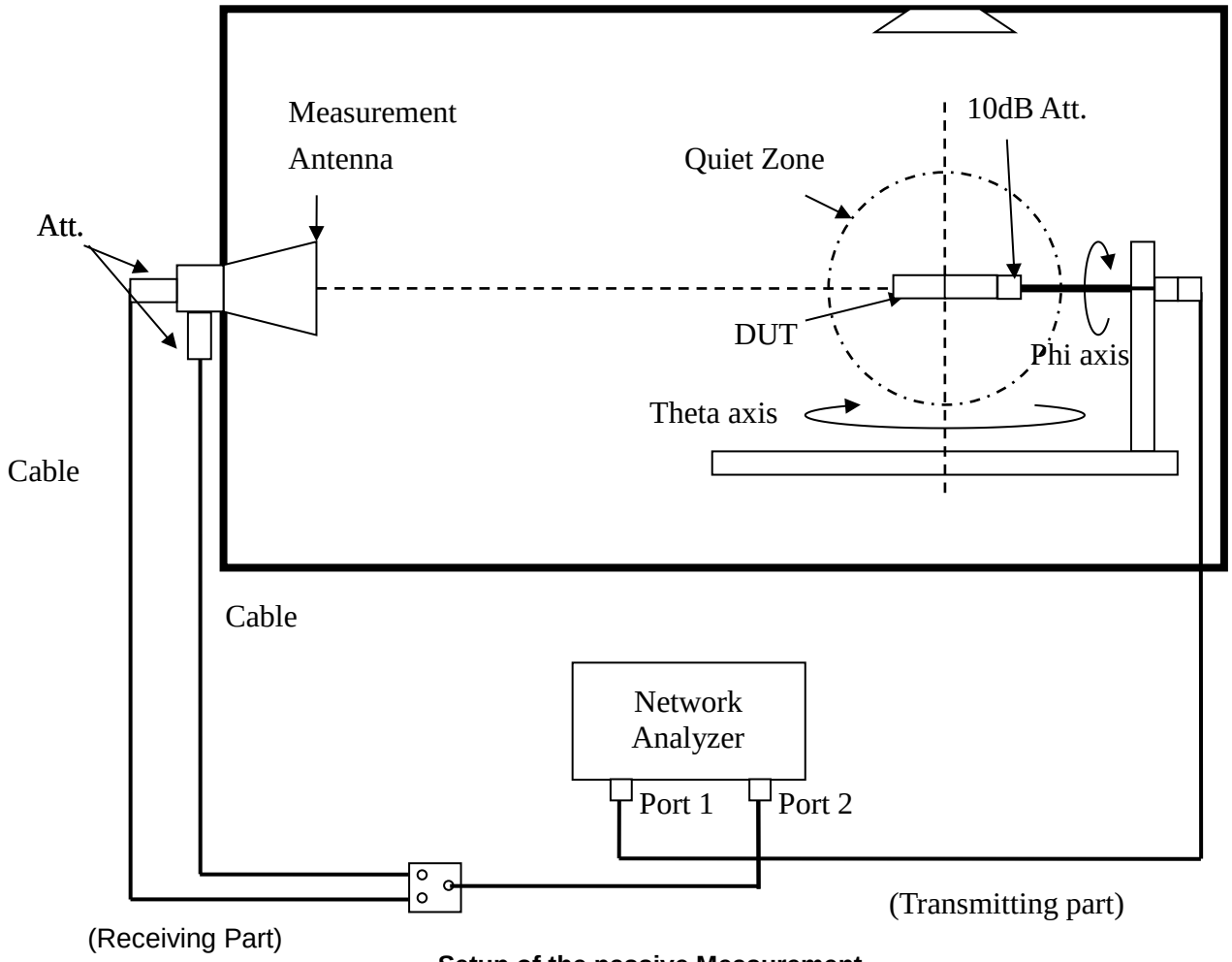

Setup of the passive Measurement

3. Test Equipment List

Name	Manufacturer	Type/Model	Serial Number	Calibration	
				Last Cal.	Due Date
Network Analyzer	Agilent	E5071C	MY46317418	2024/01/03	2025/01/02
Switch Control	ETS-Lindgren	EMCenter	00160100	NCR	NCR
Diagonal Dual Polarized Horn	ETS-Lindgren	3164-08	00099205	NCR	NCR
Multi-Devices Controller	ETS-Lindgren	2090-OPT1	00066604	NCR	NCR
Medium Duty Holder	ETS-Lindgren	2015	N/A	NCR	NCR

Note: Antenna gain was measured in the anechoic chamber (Measurement System: ETS-Lindgren AMS-8500, SW Version: EMQuest 100 V1.08).

4. Summary of WLAN Uncorrelated gains

Band	DG(4S4T)dBi
WLAN 2.4GHz	0.01
WLAN 5GHz 5150-5250	0.62
WLAN 5GHz 5250-5350	0.62
WLAN 5GHz 5470-5725	1.68
WLAN 5GHz 5725-5850	0.87

Remark:

1. The gain of each antenna is measured across all test angles.
2. Uncorrelated gains are calculated using the formulas specified in KDB662911 D01 (d) (ii) for all angles.
3. The composite antenna gains are examined for all angles to identify the maximum gain and its corresponding position.

5. Summary of WLAN Antenna Gain Test Results

Remark: For detailed raw data please refer to Appendix A.

Summary of WLAN 2.4/5G Test Results

Model	DB1														
Test / Position	Gain / Free Space														
Frequency (MHz)	2412	2442	2462	5180	5220	5240	5260	5300	5320	5500	5580	5700	5745	5785	5825
Peak Gain	3.08	3.22	3.15	2.91	3.39	3.35	2.51	2.79	2.95	3.70	3.67	2.69	3.27	3.14	2.24
Model	DB2														
Test / Position	Gain / Free Space														
Frequency (MHz)	2412	2442	2462	5180	5220	5240	5260	5300	5320	5500	5580	5700	5745	5785	5825
Peak Gain	2.95	3.36	3.45	3.99	3.88	3.63	3.63	3.71	3.72	4.13	4.43	4.31	3.52	3.54	3.26
Model	DB3														
Test / Position	Gain / Free Space														
Frequency (MHz)	2412	2442	2462	5180	5220	5240	5260	5300	5320	5500	5580	5700	5745	5785	5825
Peak Gain	3.48	3.74	3.72	3.10	3.38	3.36	3.17	3.06	3.05	3.28	3.24	2.91	2.75	2.95	3.25
Model	DB4														
Test / Position	Gain / Free Space														
Frequency (MHz)	2412	2442	2462	5180	5220	5240	5260	5300	5320	5500	5580	5700	5745	5785	5825
Peak Gain	3.89	3.66	3.41	3.60	3.93	3.65	3.64	3.99	4.13	4.12	4.23	4.09	3.77	3.84	4.05

6. FS Pattern

WLAN 2.4GHz DB1

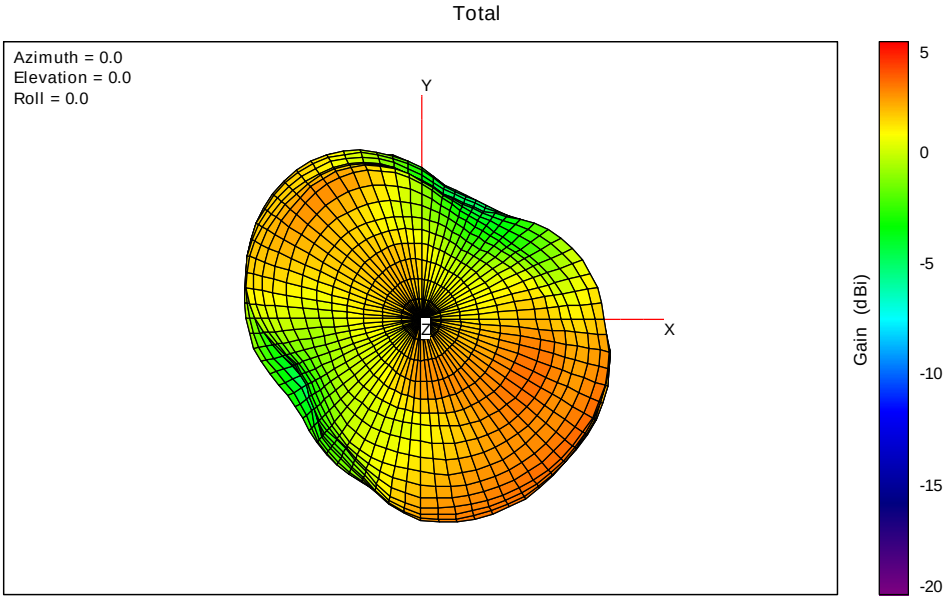

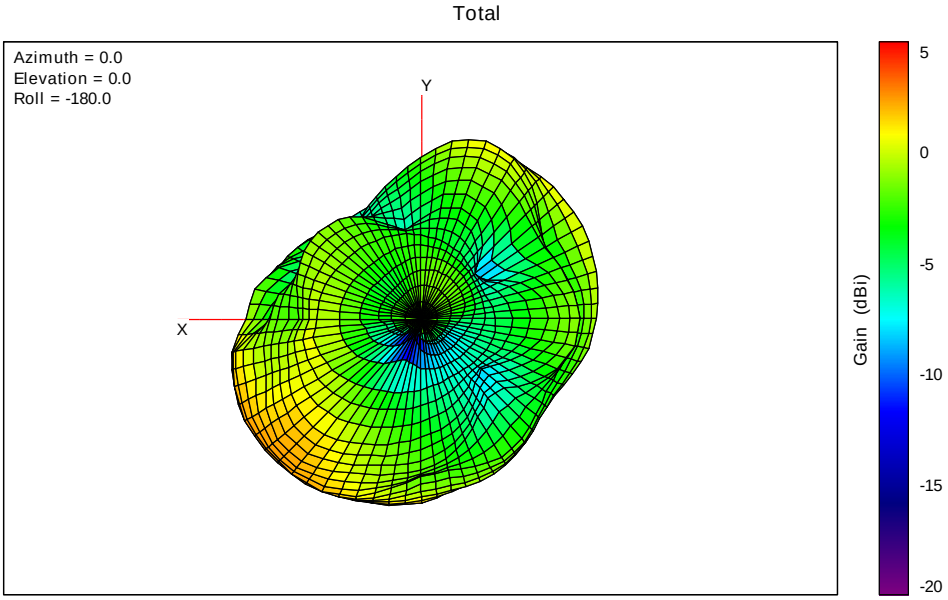

3D Free Space Gain Pattern

WLAN 5.2GHz DB1

Total

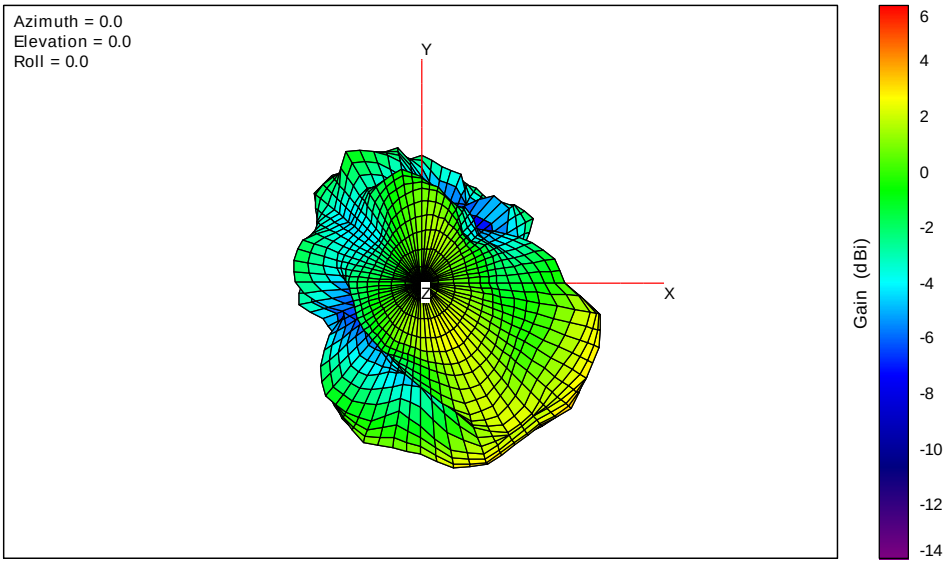

Total

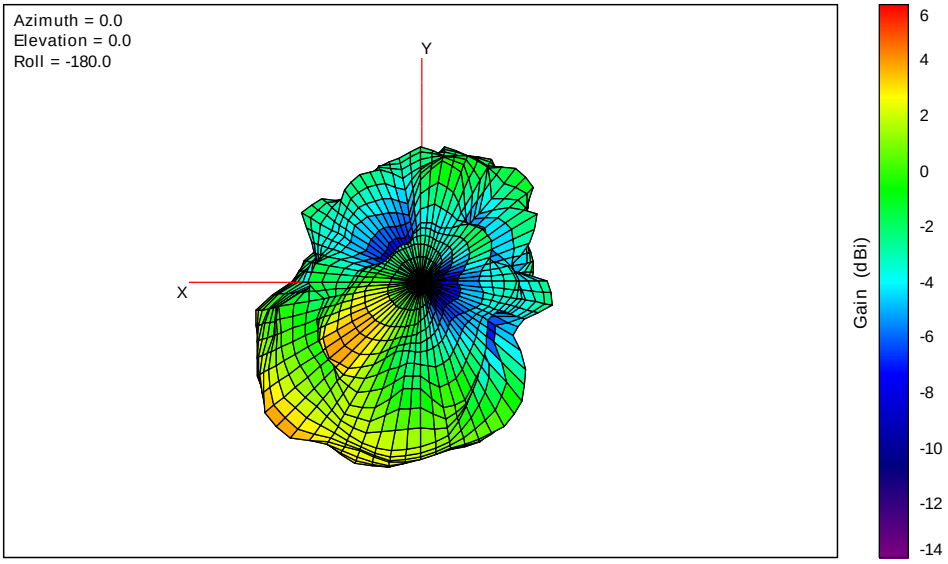

3D Free Space Gain Pattern

WLAN 5.3GHz DB1

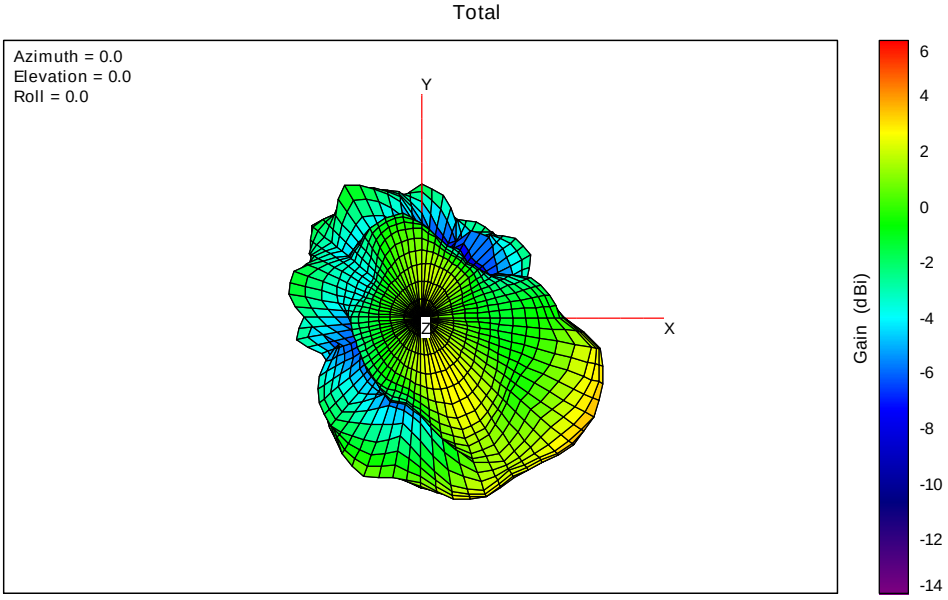

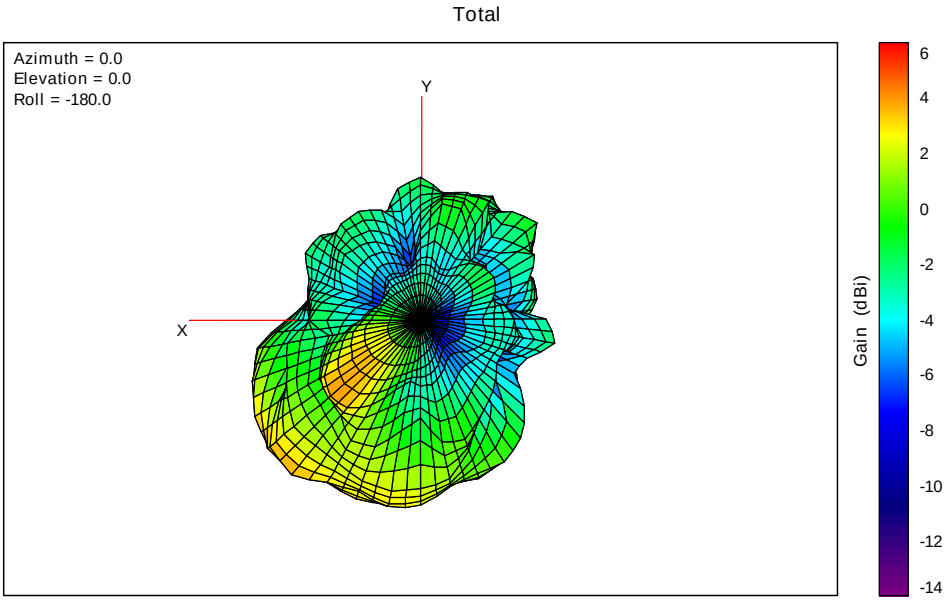

3D Free Space Gain Pattern

WLAN 5.5GHz DB1

Total

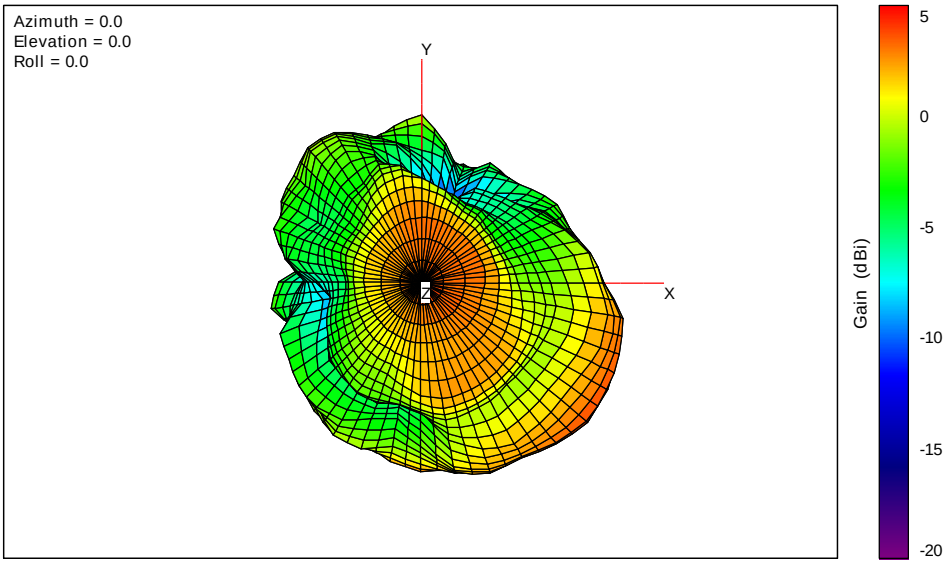

Total

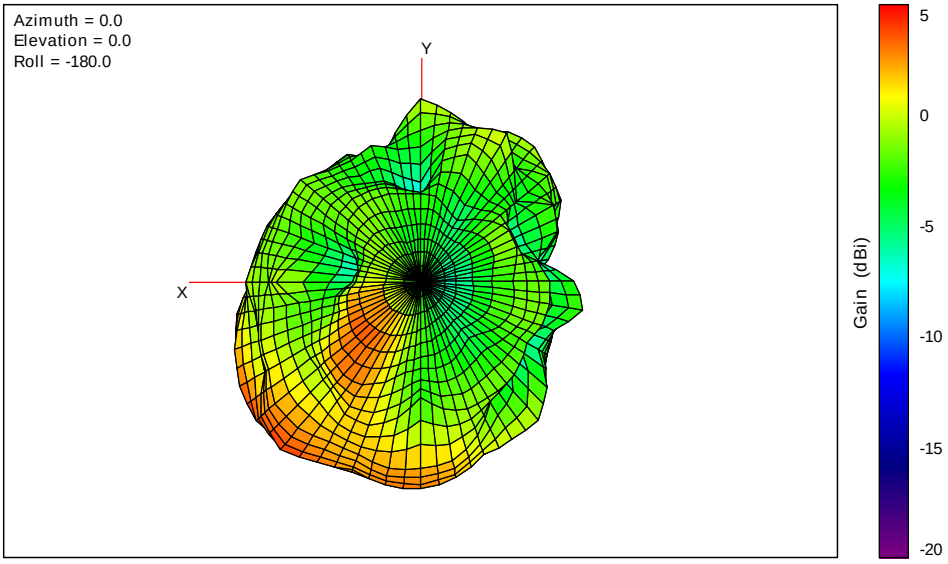

3D Free Space Gain Pattern

WLAN 5.8GHz DB1

Total

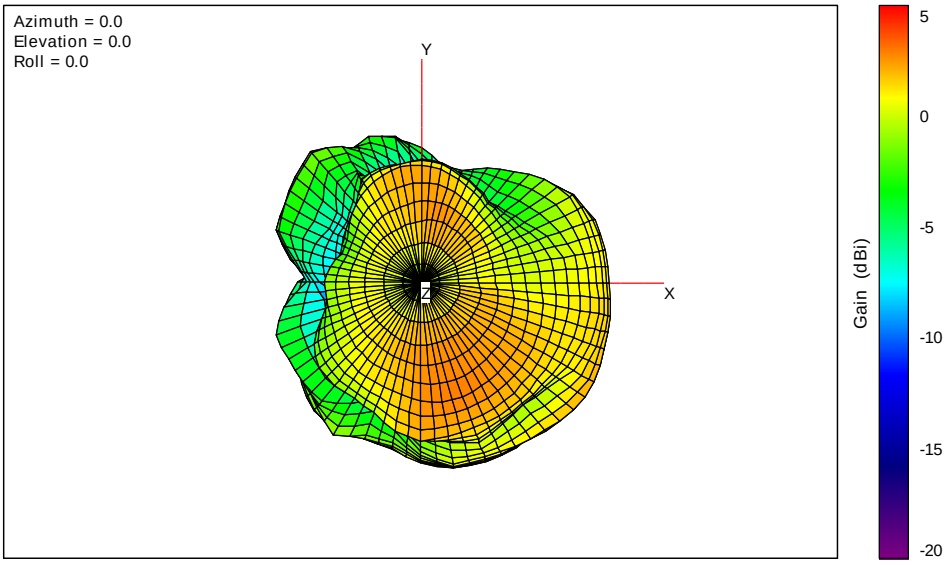

Total

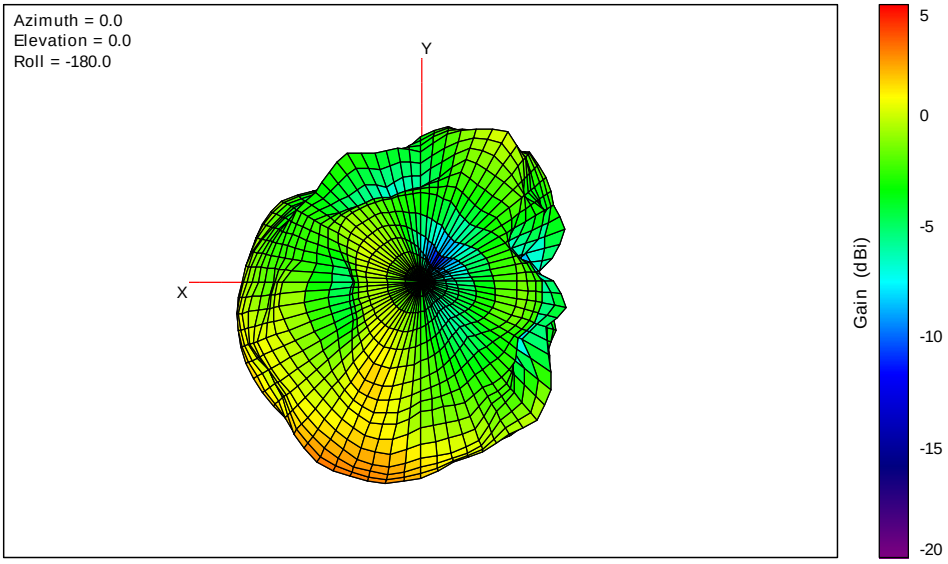

3D Free Space Gain Pattern

WLAN 2.4GHz DB2

Total

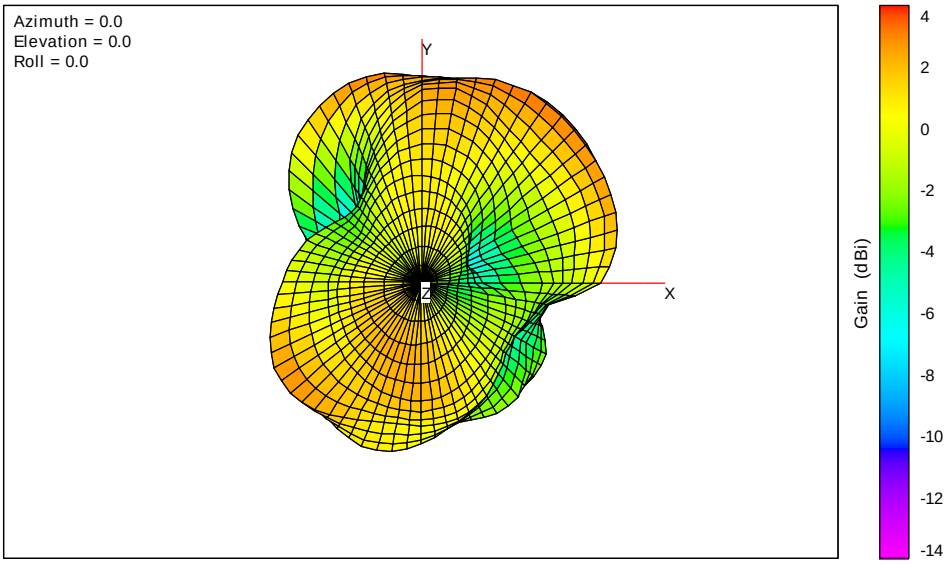

Total

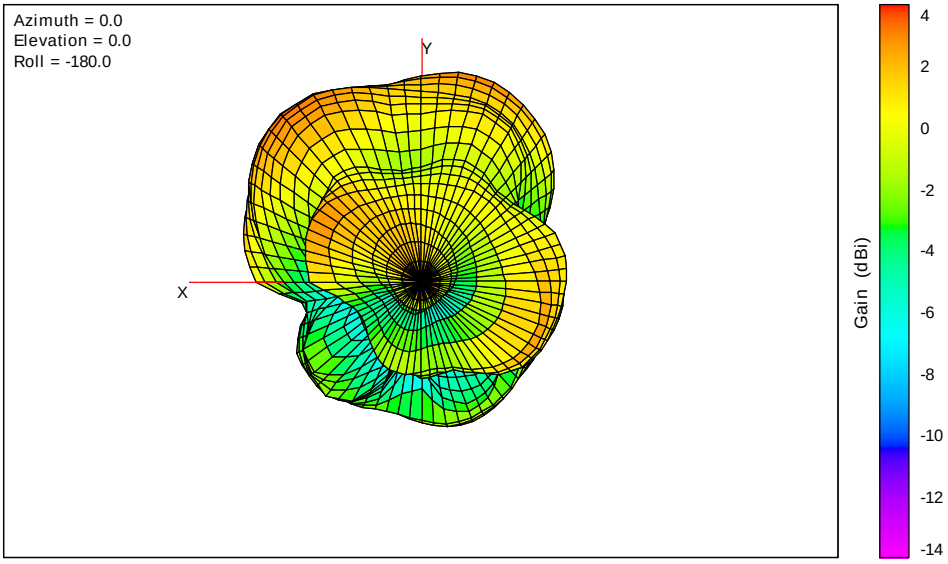

3D Free Space Gain Pattern

WLAN 5.2GHz DB2

Total

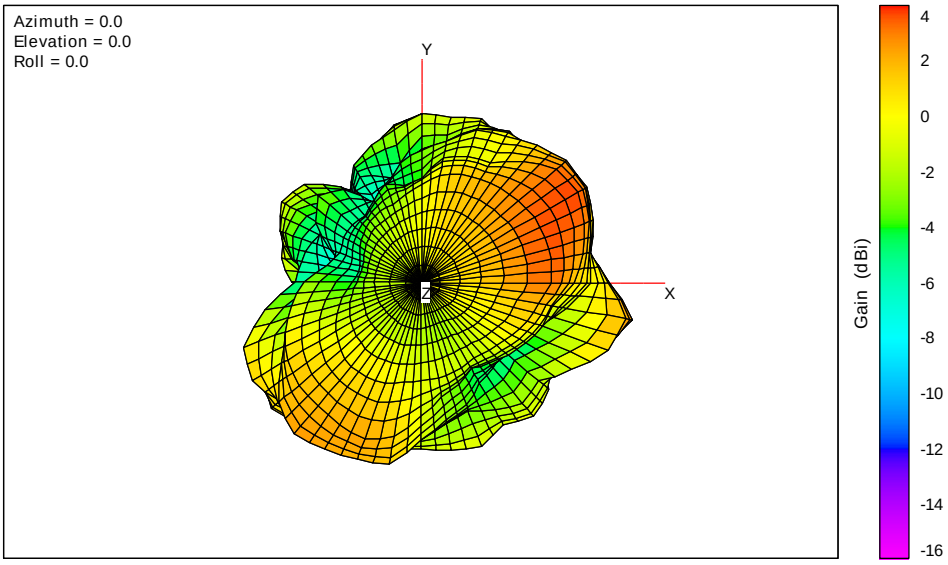

Total

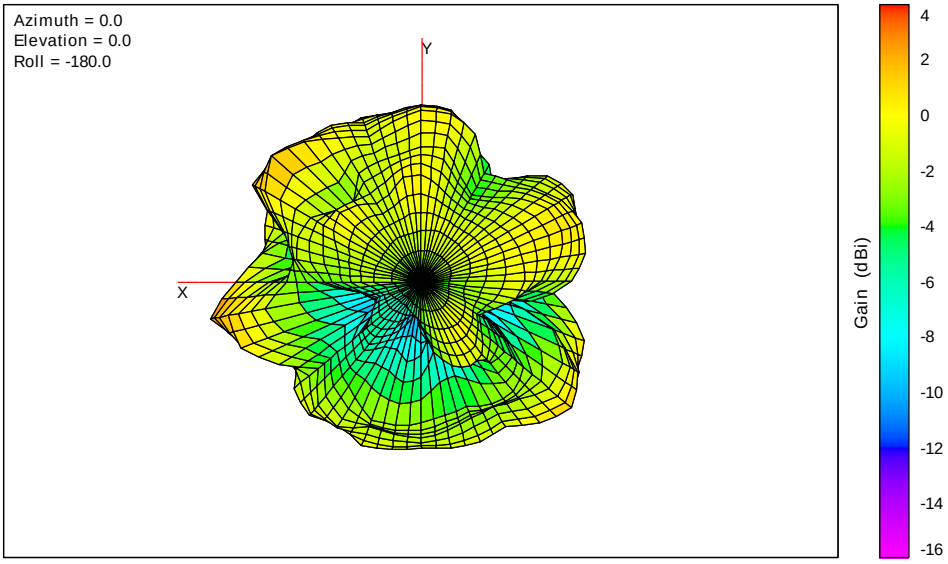

3D Free Space Gain Pattern

WLAN 5.3GHz DB2

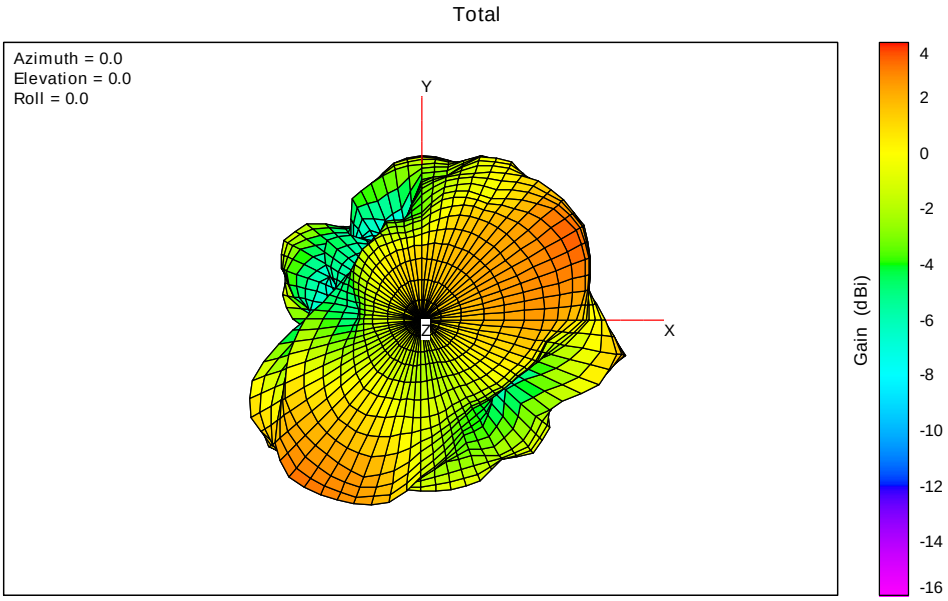

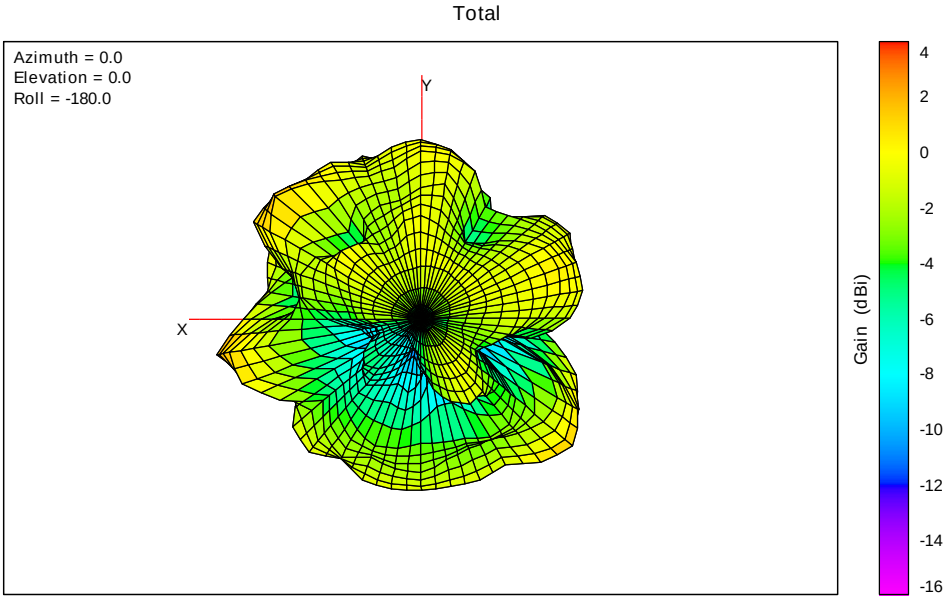

3D Free Space Gain Pattern

WLAN 5.5GHz DB2

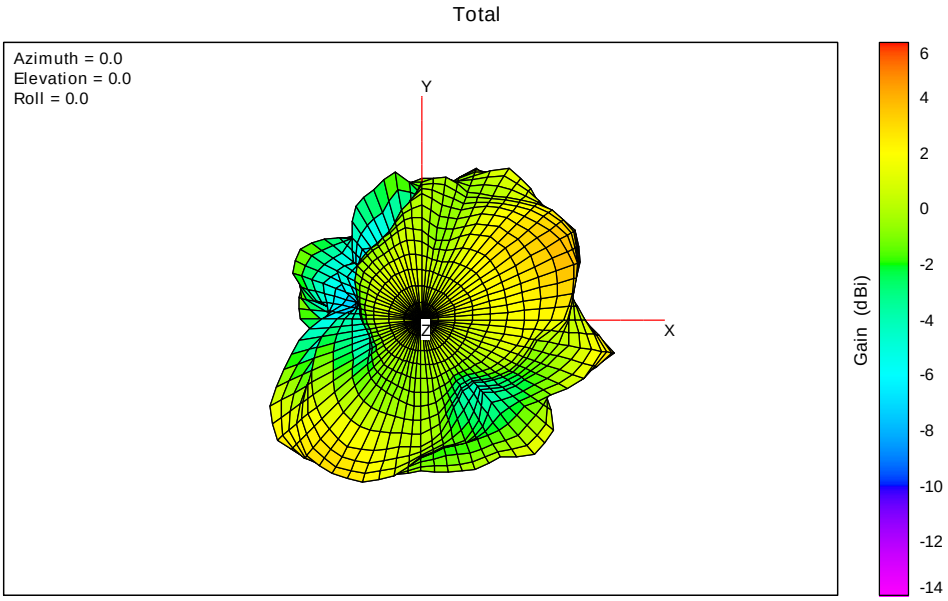

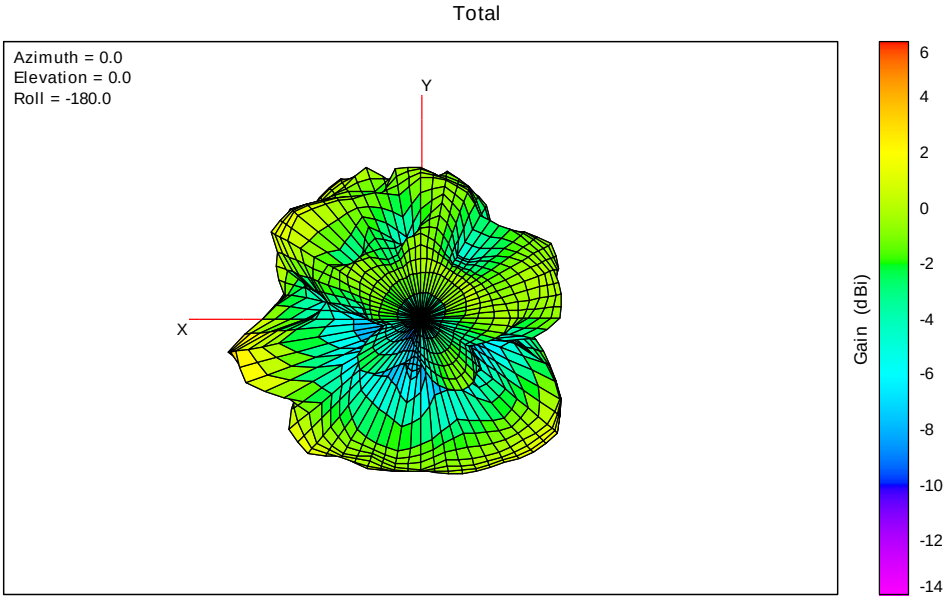

3D Free Space Gain Pattern

WLAN 5.8GHz DB2

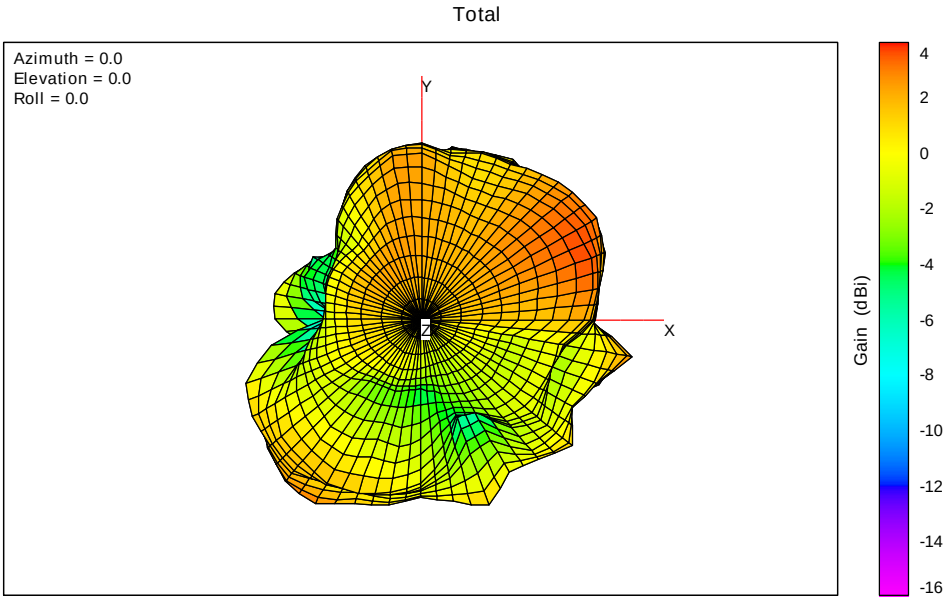

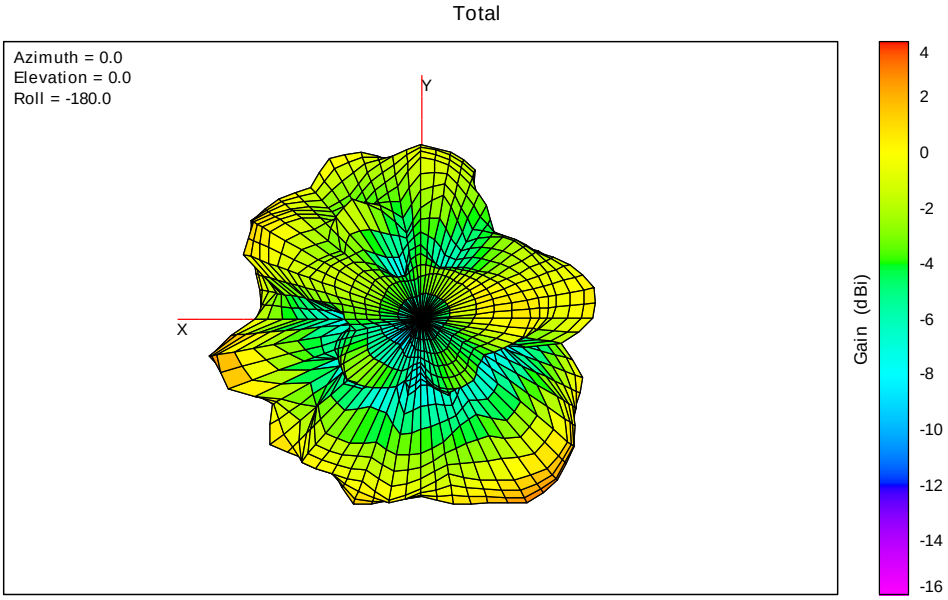

3D Free Space Gain Pattern

WLAN 2.4GHz DB3

Total

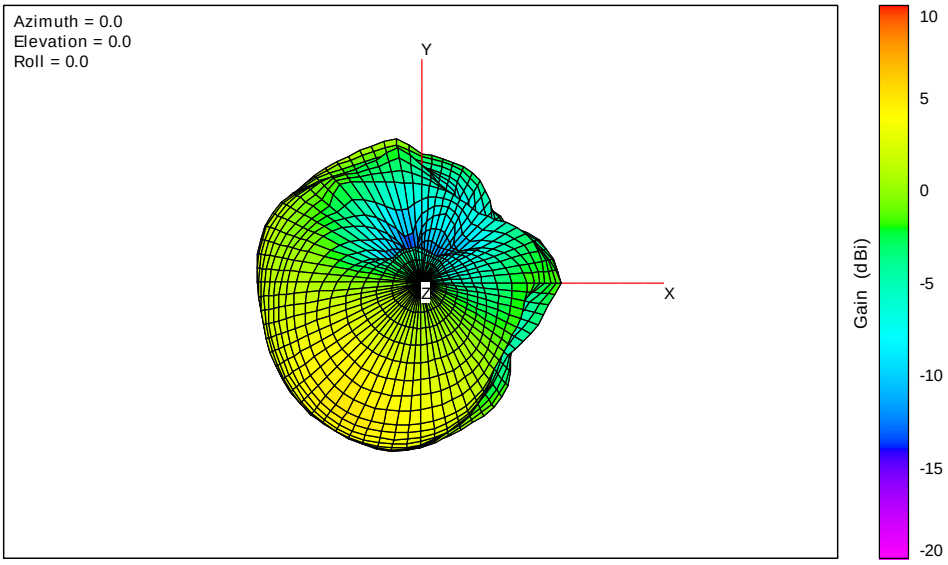

Total

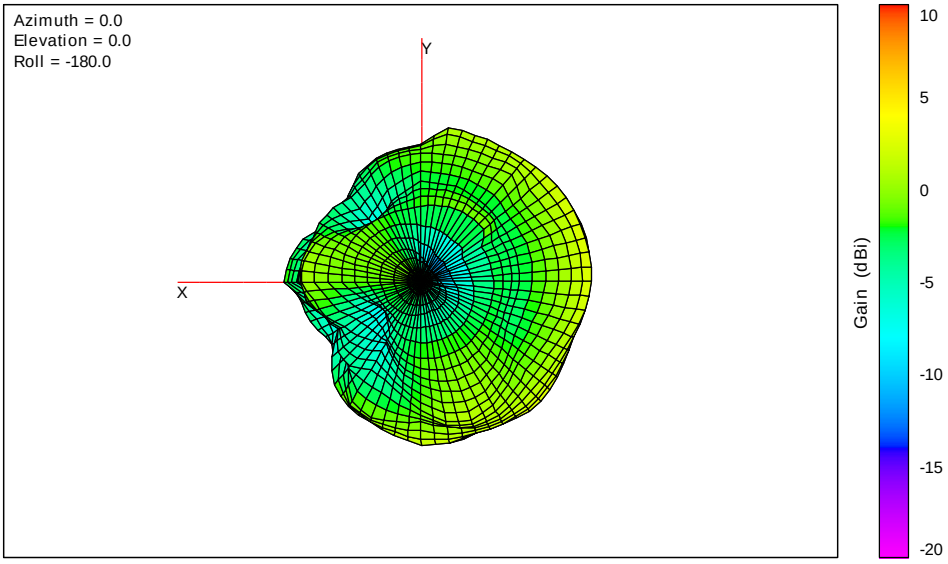

3D Free Space Gain Pattern

WLAN 5.2GHz DB3

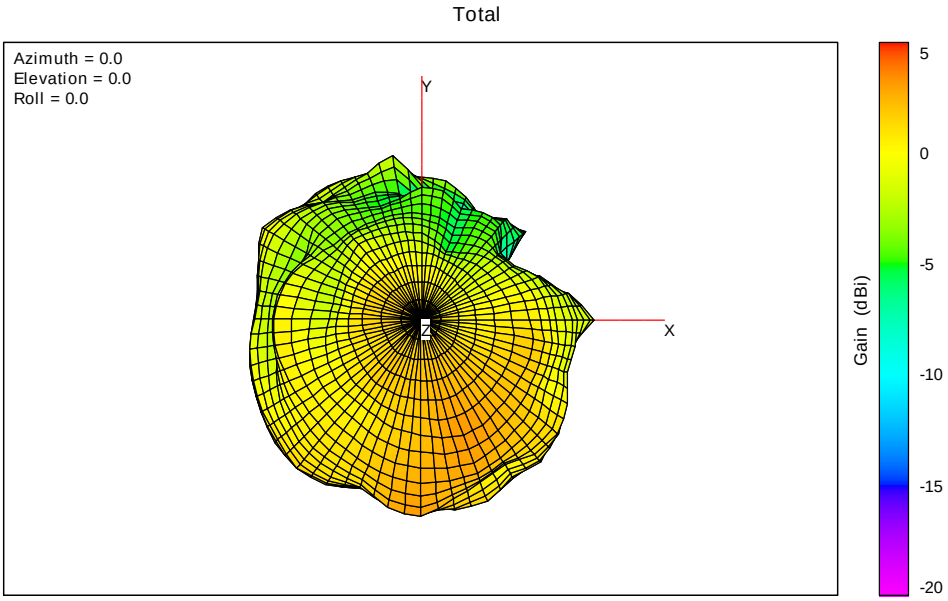

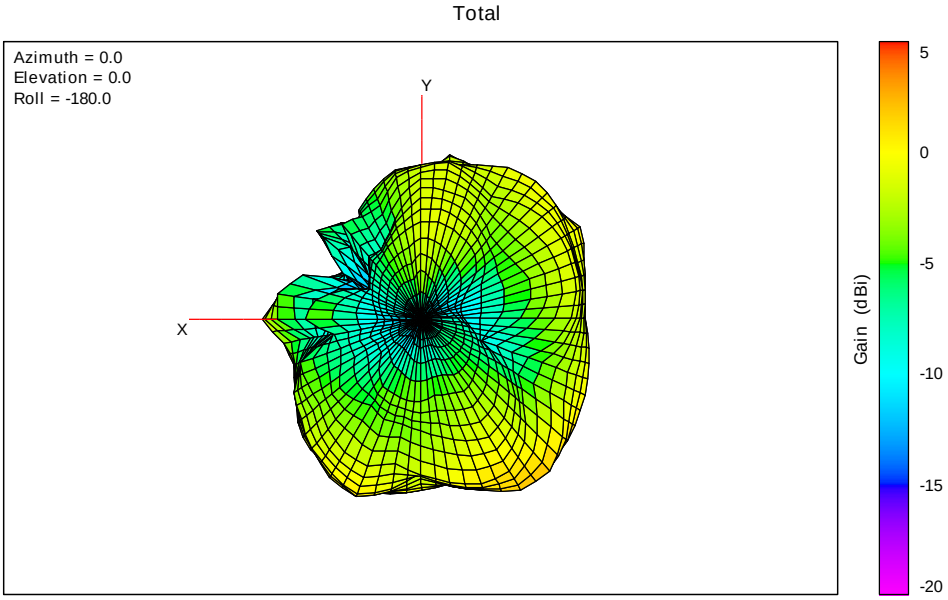

3D Free Space Gain Pattern

WLAN 5.3GHz DB3

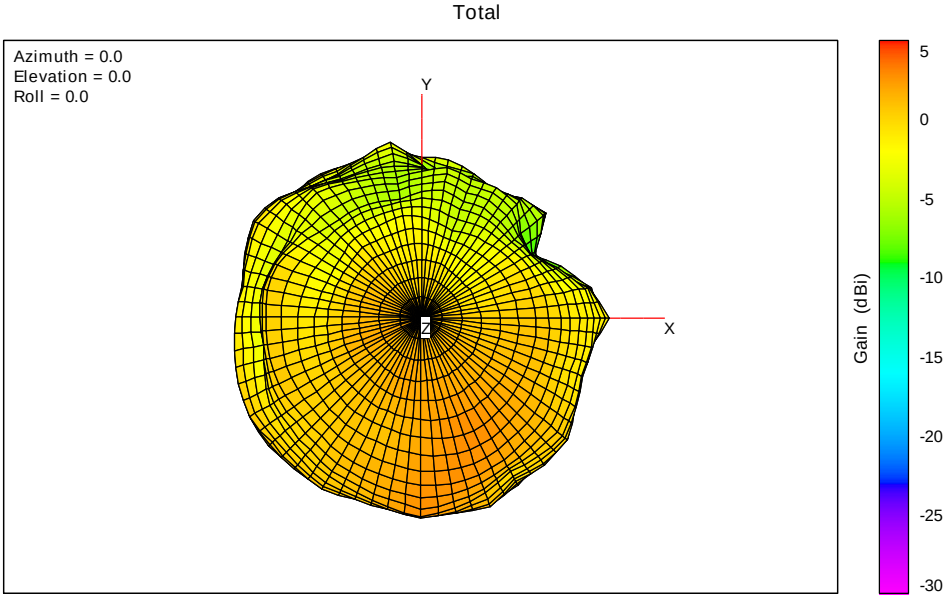

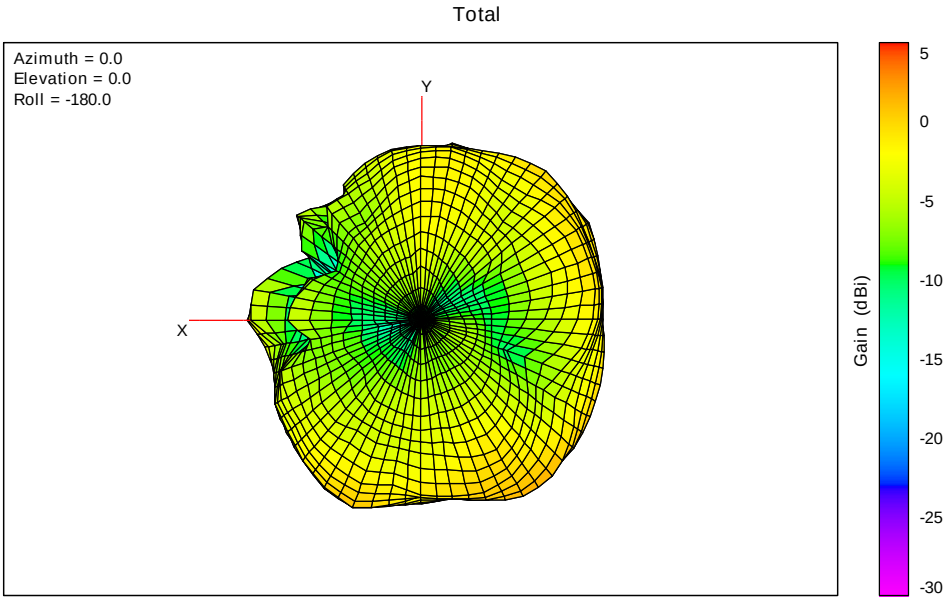

3D Free Space Gain Pattern

WLAN 5.5GHz DB3

Total

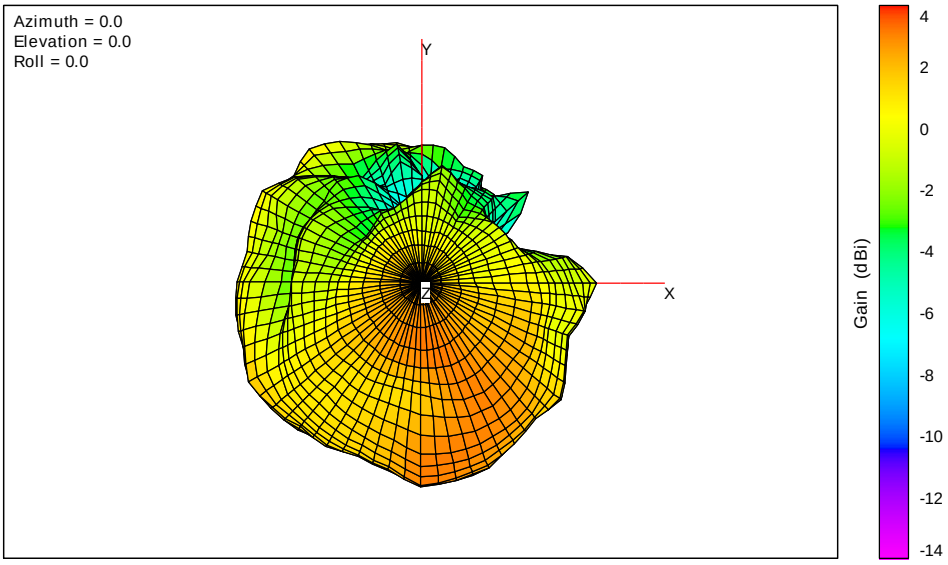

Total

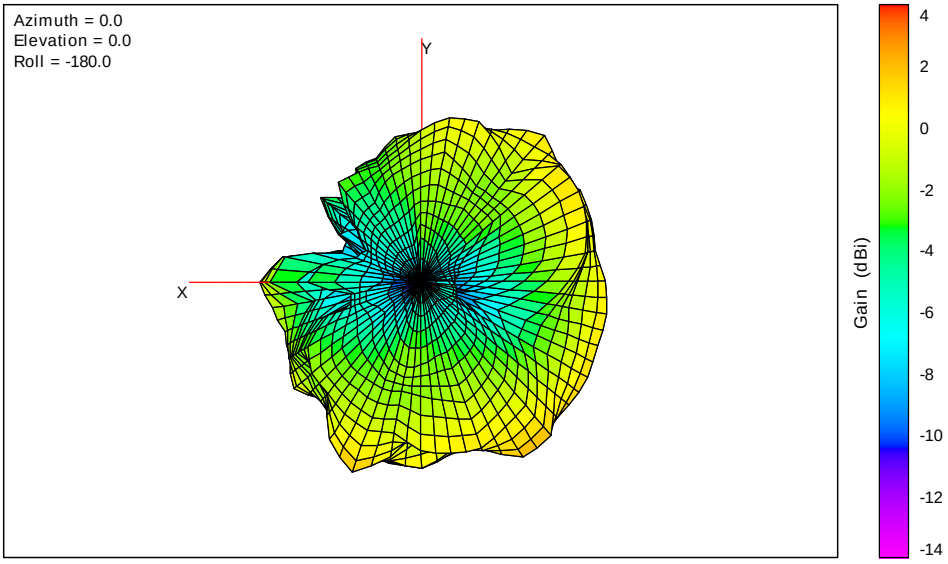

3D Free Space Gain Pattern

WLAN 5.8GHz DB3

Total

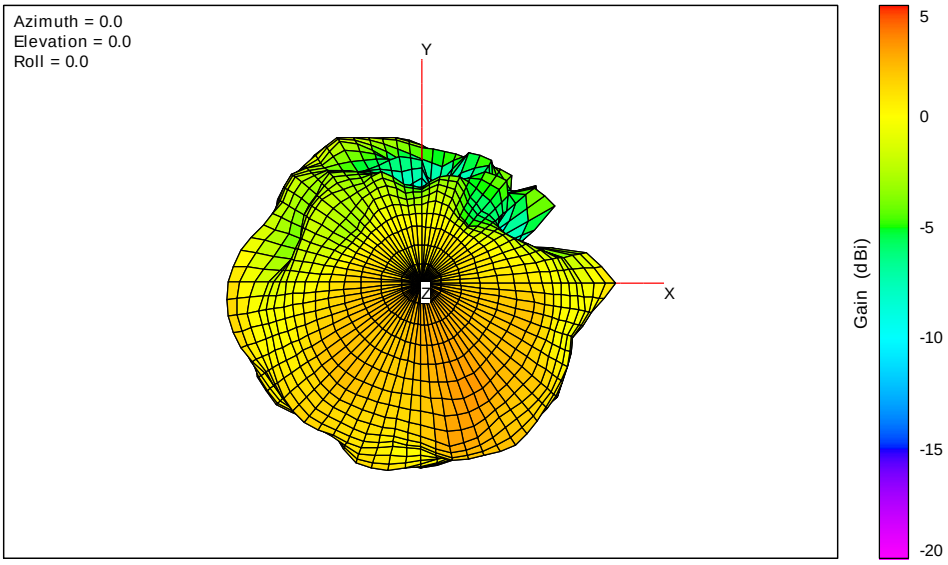

Total

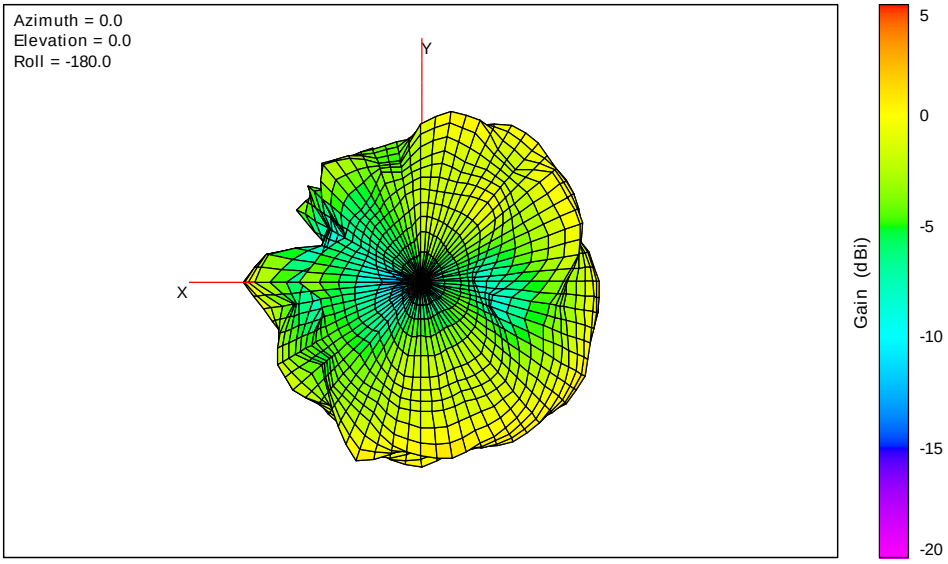

3D Free Space Gain Pattern

WLAN 2.4GHz DB4

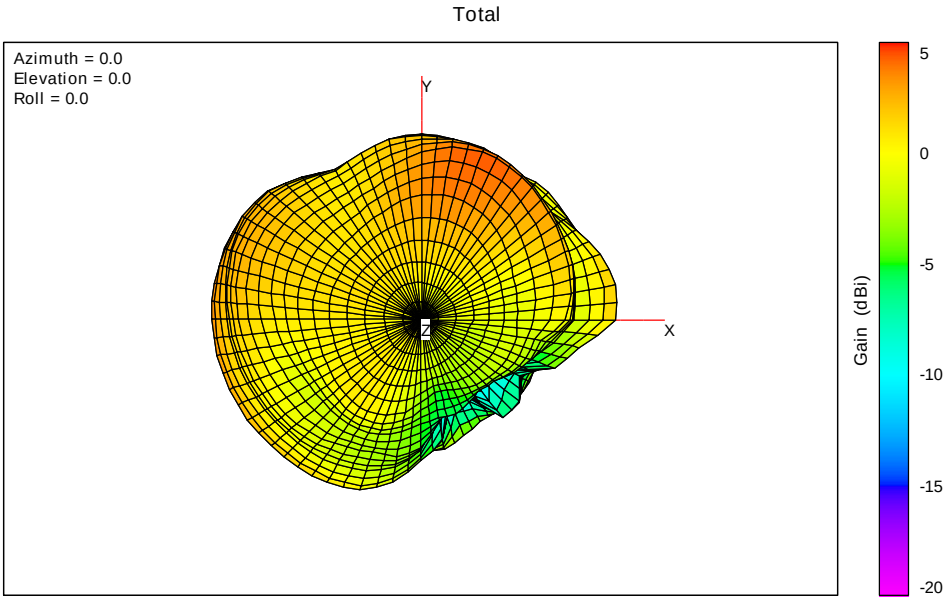

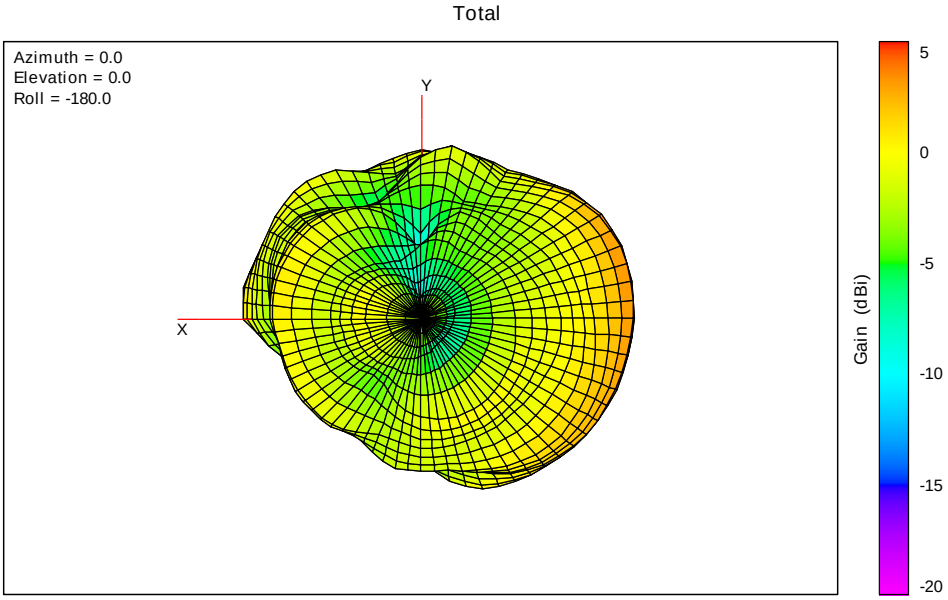

3D Free Space Gain Pattern

WLAN 5.2GHz DB4

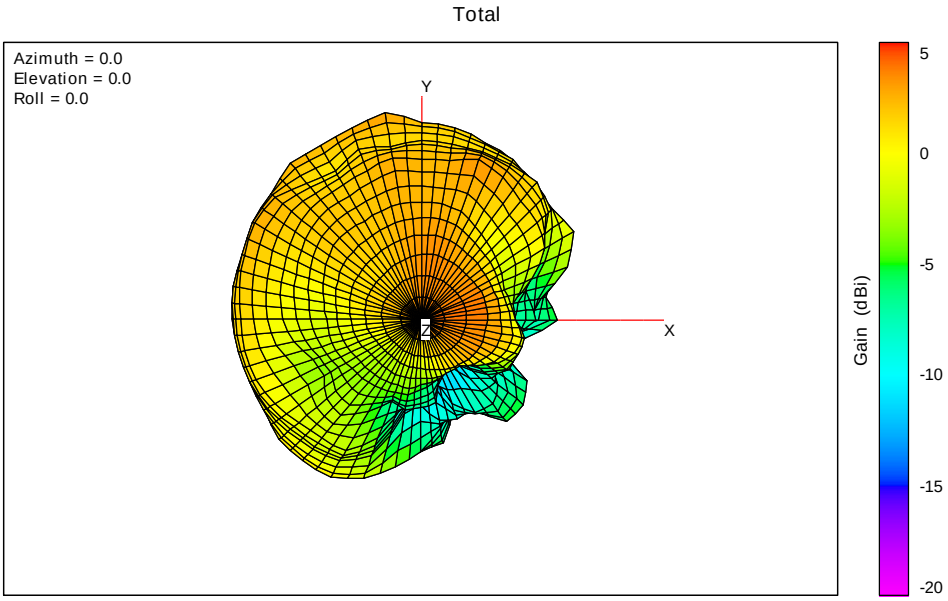

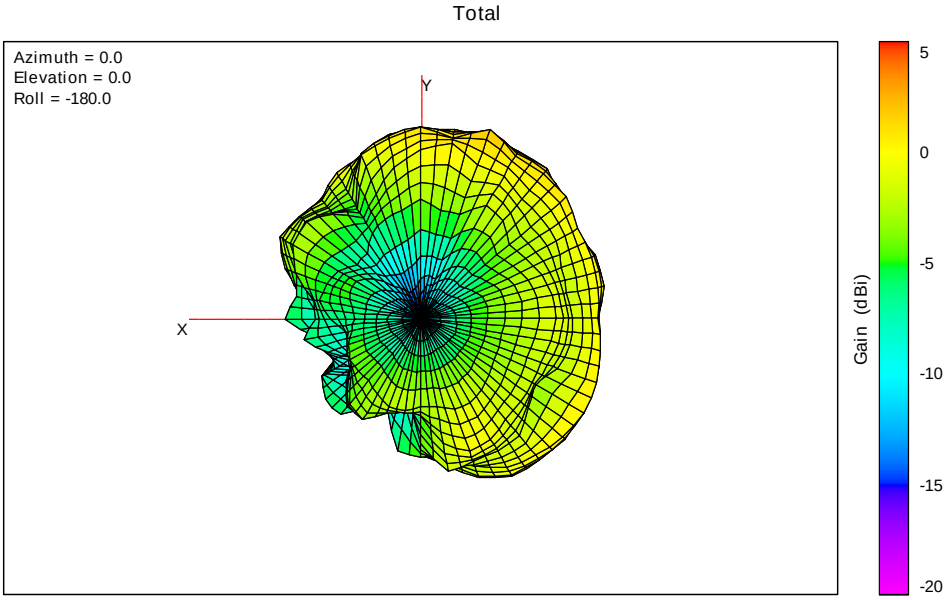

3D Free Space Gain Pattern

WLAN 5.3GHz DB4

Total

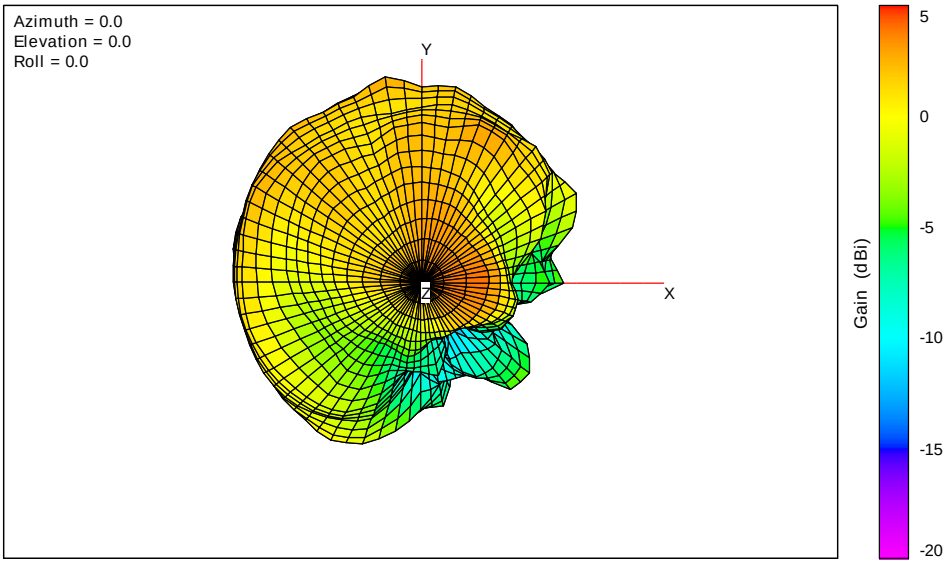

Total

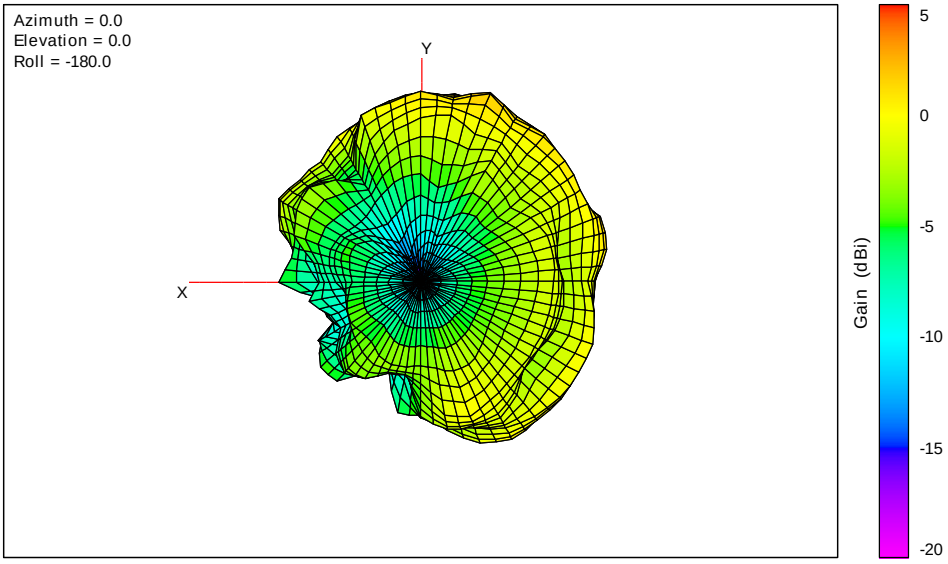

3D Free Space Gain Pattern

WLAN 5.5GHz DB4

Total

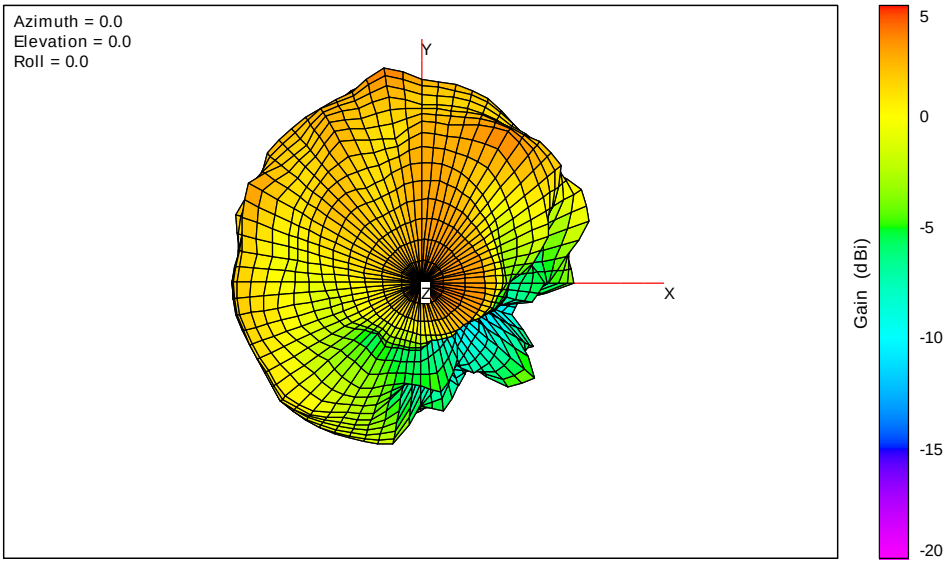

Total

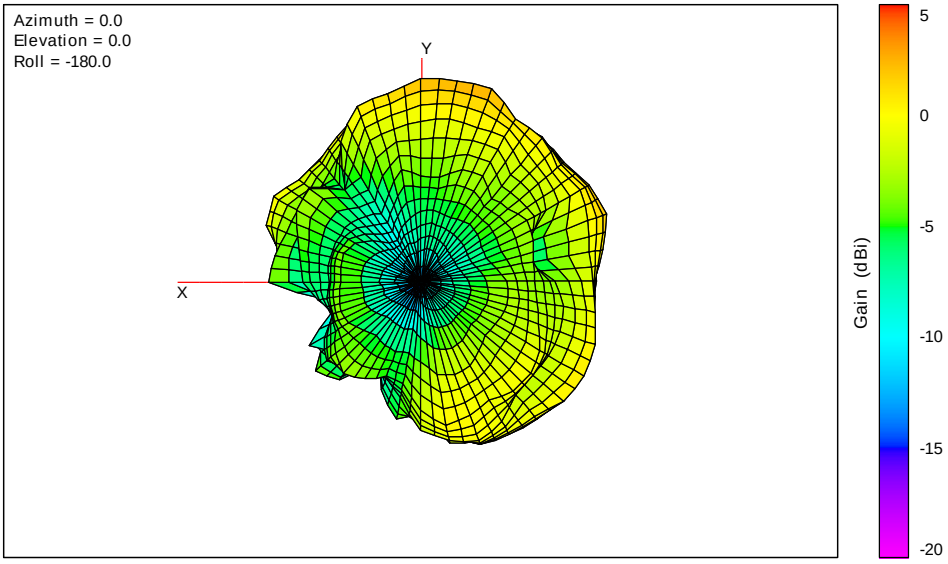

3D Free Space Gain Pattern

WLAN 5.8GHz DB4

Total

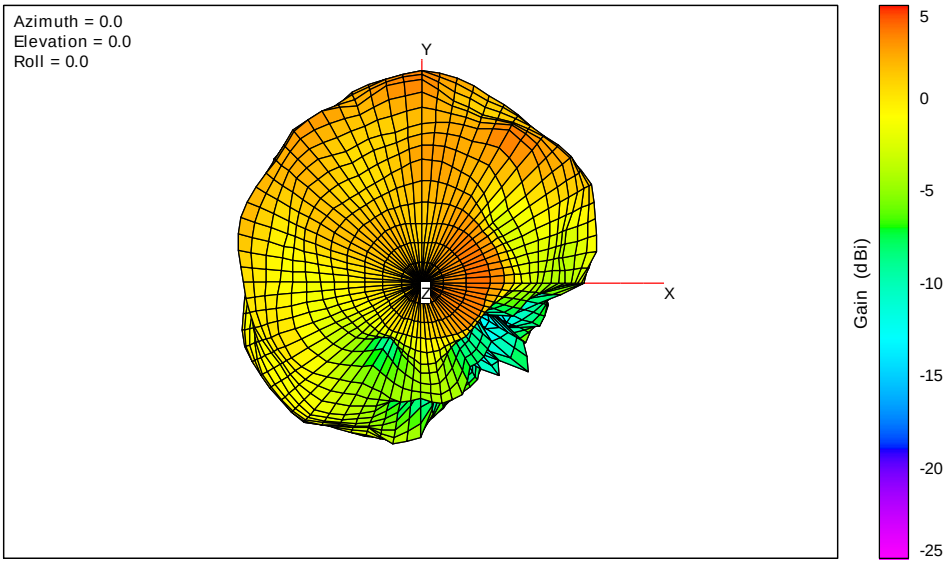

Total

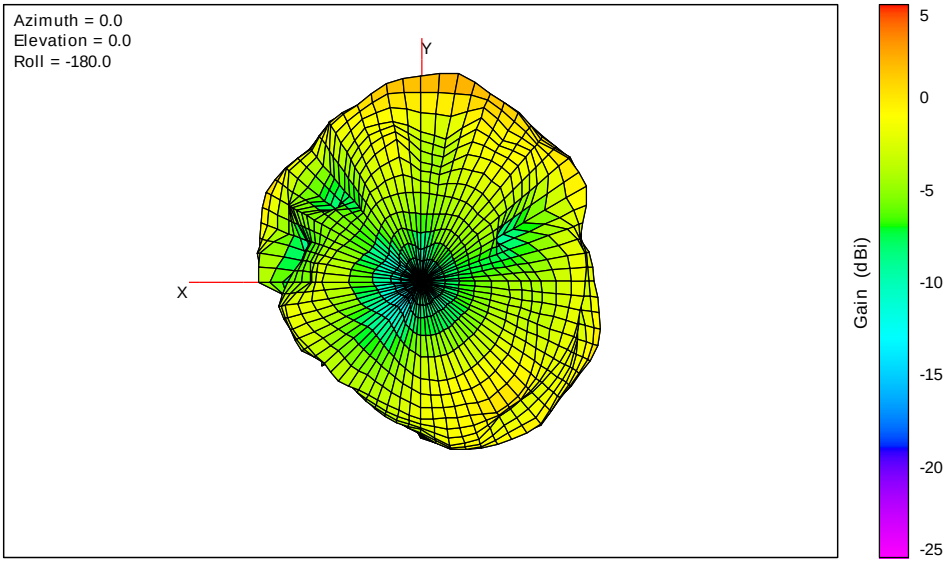

3D Free Space Gain Pattern

Appendix A. Test Results of Detailed Raw Data

The detailed raw data tables are shown as follows.

2412MHz

Theta Plorization							Phi Plorization						
Angle (θ)	Angle (ψ)	Max Gain(dBi)				N_{ANT}	Angle (θ)	Angle (ψ)	Max Gain(dBi)				N_{ANT}
		Ant 1(G1)	Ant 2(G2)	Ant 3(G3)	Ant 4(G4)				Ant 1(G1)	Ant 2(G2)	Ant 3(G3)	Ant 4(G4)	
0.00	0.00	-0.91	-0.77	-12.43	-7.21	4	0.00	0.00	-10.48	-2.22	-3.39	-1.75	4
0.00	10.00	-1.00	-0.31	-10.68	-8.53	4	0.00	10.00	-8.85	-3	-3.72	-1.51	4
0.00	20.00	-1.35	0.46	-8.25	-12.13	4	0.00	20.00	-6.06	-4.89	-4.7	-1.18	4
0.00	30.00	-2.05	1.00	-6.38	-20.40	4	0.00	30.00	-4.23	-7.8	-6.13	-1.25	4
0.00	40.00	-3.11	1.10	-5.05	-23.94	4	0.00	40.00	-2.93	-11.6	-8.04	-1.67	4
0.00	50.00	-4.63	0.89	-4.22	-13.16	4	0.00	50.00	-2.05	-13.94	-10.42	-2.37	4
0.00	60.00	-6.68	0.35	-3.67	-8.81	4	0.00	60.00	-1.45	-10.76	-13.37	-3.23	4
0.00	70.00	-9.63	-0.39	-3.34	-6.15	4	0.00	70.00	-1.02	-6.67	-18.23	-4.28	4
0.00	80.00	-13.05	-1.34	-3.31	-4.42	4	0.00	80.00	-0.82	-3.77	-29.98	-5.65	4
0.00	90.00	-12.99	-2.58	-3.49	-3.13	4	0.00	90.00	-0.79	-1.57	-18.58	-7.28	4
0.00	100.00	-9.82	-4.30	-3.85	-2.15	4	0.00	100.00	-1.15	-0.05	-12.36	-9.22	4
0.00	110.00	-6.73	-6.51	-4.63	-1.55	4	0.00	110.00	-1.94	0.93	-8.78	-11.24	4
0.00	120.00	-4.51	-9.49	-5.80	-1.32	4	0.00	120.00	-3.25	1.49	-6.58	-11.91	4
0.00	130.00	-2.83	-11.90	-7.07	-1.52	4	0.00	130.00	-5.04	1.64	-4.93	-9.99	4
0.00	140.00	-1.67	-10.78	-8.82	-2.02	4	0.00	140.00	-7.68	1.51	-3.93	-7.59	4
0.00	150.00	-0.81	-7.46	-10.68	-2.72	4	0.00	150.00	-11.72	1.13	-2.9	-5.69	4
0.00	160.00	-0.30	-4.61	-14.08	-3.42	4	0.00	160.00	-16.86	0.51	-2.34	-4.48	4
0.00	170.00	-0.09	-2.56	-19.94	-4.27	4	0.00	170.00	-14.47	-0.26	-1.72	-3.55	4
0.00	180.00	-0.14	-1.11	-24.55	-5.48	4	0.00	180.00	-9.62	-1.32	-1.26	-2.56	4
0.00	190.00	-0.53	-0.09	-13.41	-6.97	4	0.00	190.00	-6.3	-2.69	-1.16	-1.53	4
0.00	200.00	-1.31	0.49	-8.23	-9.35	4	0.00	200.00	-4.2	-4.58	-1.4	-0.59	4
0.00	210.00	-2.42	0.78	-5.25	-10.78	4	0.00	210.00	-2.81	-7.36	-2.27	-0.24	4
0.00	220.00	-4.03	0.86	-3.27	-10.38	4	0.00	220.00	-1.83	-10.97	-3.48	-0.25	4
0.00	230.00	-6.18	0.75	-2.00	-8.44	4	0.00	230.00	-1.09	-12.47	-4.97	-0.61	4
0.00	240.00	-8.87	0.44	-1.11	-6.35	4	0.00	240.00	-0.58	-8.86	-6.58	-1.25	4
0.00	250.00	-12.01	-0.05	-0.61	-4.70	4	0.00	250.00	-0.2	-5.41	-9.07	-2.24	4
0.00	260.00	-13.84	-0.83	-0.40	-3.42	4	0.00	260.00	-0.1	-3.15	-12.78	-3.74	4
0.00	270.00	-11.98	-1.86	-0.53	-2.37	4	0.00	270.00	-0.2	-1.56	-14.65	-5.66	4
0.00	280.00	-8.89	-3.30	-0.85	-1.63	4	0.00	280.00	-0.67	-0.62	-11.7	-8.4	4
0.00	290.00	-6.49	-5.15	-1.49	-1.19	4	0.00	290.00	-1.45	0.03	-8.52	-12.04	4
0.00	300.00	-4.64	-7.37	-2.42	-1.05	4	0.00	300.00	-2.68	0.42	-4.89	-18.37	4
0.00	310.00	-3.33	-9.63	-3.69	-1.07	4	0.00	310.00	-4.31	0.6	-3.48	-23.27	4
0.00	320.00	-2.45	-10.14	-5.33	-1.34	4	0.00	320.00	-6.66	0.6	-2.57	-13.68	4
0.00	330.00	-1.78	-8.27	-7.64	-1.87	4	0.00	330.00	-9.66	0.42	-2.01	-8.56	4
0.00	340.00	-1.38	-5.71	-10.60	-2.65	4	0.00	340.00	-13.84	0.05	-1.7	-5.37	4
0.00	350.00	-1.09	-3.46	-12.92	-3.83	4	0.00	350.00	-16.03	-0.53	-1.74	-3.33	4
15.00	0.00	-5.11	-2.45	-11.63	-5.05	4	15.00	0.00	-14.4	-1.47	-5.2	-3.93	4
15.00	10.00	-5.45	-1.46	-10.51	-6.36	4	15.00	10.00	-11	-2.77	-6.62	-2.42	4
15.00	20.00	-5.35	-0.71	-9.16	-7.34	4	15.00	20.00	-8.07	-4.42	-8.72	-1.41	4
15.00	30.00	-5.15	-0.39	-8.15	-7.23	4	15.00	30.00	-5.83	-6.77	-12.19	-0.97	4
15.00	40.00	-5.27	-0.38	-7.52	-5.95	4	15.00	40.00	-4	-9.39	-16.75	-0.93	4
15.00	50.00	-5.99	-0.53	-7.10	-4.27	4	15.00	50.00	-2.42	-9.93	-21.68	-1.29	4
15.00	60.00	-7.48	-0.73	-7.03	-2.79	4	15.00	60.00	-1.25	-6.96	-24.15	-2.09	4
15.00	70.00	-10.02	-1.04	-7.12	-1.54	4	15.00	70.00	-0.4	-3.75	-31.02	-3.46	4
15.00	80.00	-13.35	-1.66	-7.24	-0.53	4	15.00	80.00	0.07	-1.59	-21.88	-5.76	4
15.00	90.00	-13.74	-2.74	-6.35	0.19	4	15.00	90.00	0.11	-0.12	-13.08	-9.35	4
15.00	100.00	-9.88	-4.67	-6.30	0.58	4	15.00	100.00	-0.28	0.84	-8.66	-13.33	4

15.00	110.00	-6.36	-7.66	-7.25	0.65	4	15.00	110.00	-1.23	1.39	-7.46	-13.51	4
15.00	120.00	-3.91	-12.43	-8.51	0.58	4	15.00	120.00	-2.7	1.57	-6.67	-11.12	4
15.00	130.00	-2.15	-15.30	-9.63	0.35	4	15.00	130.00	-4.86	1.4	-6.02	-8.76	4
15.00	140.00	-1.03	-10.49	-10.89	0.02	4	15.00	140.00	-8.17	0.92	-5.26	-6.82	4
15.00	150.00	-0.32	-6.60	-12.59	-0.44	4	15.00	150.00	-14.42	0.14	-4.28	-5.27	4
15.00	160.00	-0.06	-4.01	-15.47	-1.09	4	15.00	160.00	-24.94	-0.96	-3.14	-4.08	4
15.00	170.00	-0.08	-2.25	-17.70	-1.95	4	15.00	170.00	-12.37	-2.4	-1.99	-3.02	4
15.00	180.00	-0.43	-0.99	-13.35	-2.97	4	15.00	180.00	-7.22	-4.2	-0.9	-1.96	4
15.00	190.00	-1.11	-0.30	-9.41	-4.27	4	15.00	190.00	-4.1	-6.08	-0.2	-1.05	4
15.00	200.00	-2.10	0.08	-6.31	-5.56	4	15.00	200.00	-2.03	-7.96	-0.11	-0.41	4
15.00	210.00	-3.54	0.12	-3.73	-6.78	4	15.00	210.00	-0.52	-9.54	-0.57	-0.13	4
15.00	220.00	-5.43	0.00	-1.64	-7.20	4	15.00	220.00	0.62	-10.03	-1.64	-0.19	4
15.00	230.00	-7.79	-0.34	-0.09	-6.97	4	15.00	230.00	1.47	-8.69	-3.35	-0.66	4
15.00	240.00	-10.20	-0.80	0.85	-6.27	4	15.00	240.00	2.06	-6.14	-5.57	-1.54	4
15.00	250.00	-10.36	-1.47	1.27	-5.48	4	15.00	250.00	2.27	-3.71	-9.09	-2.81	4
15.00	260.00	-7.93	-2.34	1.38	-4.76	4	15.00	260.00	2.08	-1.74	-14.57	-4.45	4
15.00	270.00	-5.49	-3.51	1.14	-4.13	4	15.00	270.00	1.48	-0.21	-17.9	-6.2	4
15.00	280.00	-3.63	-4.84	0.57	-3.49	4	15.00	280.00	0.44	0.79	-12.21	-8.13	4
15.00	290.00	-2.50	-6.22	-0.18	-2.93	4	15.00	290.00	-1.04	1.39	-8.69	-10	4
15.00	300.00	-1.95	-7.35	-1.70	-2.53	4	15.00	300.00	-2.94	1.6	-5.49	-12.02	4
15.00	310.00	-1.87	-7.85	-3.26	-2.33	4	15.00	310.00	-5.33	1.56	-4.17	-14.45	4
15.00	320.00	-2.16	-7.67	-5.34	-2.40	4	15.00	320.00	-8.05	1.3	-3.46	-15.55	4
15.00	330.00	-2.70	-6.74	-7.88	-2.72	4	15.00	330.00	-11.56	0.96	-3.31	-12.81	4
15.00	340.00	-3.44	-5.64	-10.16	-3.19	4	15.00	340.00	-14.56	0.53	-3.43	-9.62	4
15.00	350.00	-3.88	-4.93	-11.03	-3.57	4	15.00	350.00	-15.83	0.25	-3.49	-8.18	4
30.00	0.00	-5.71	-4.74	-12.49	-7.99	4	30.00	0.00	-13.37	-0.17	-6.19	-1.65	4
30.00	10.00	-6.82	-4.49	-12.82	-8.38	4	30.00	10.00	-12.62	-0.85	-6.86	-1.42	4
30.00	20.00	-9.85	-3.79	-12.75	-8.05	4	30.00	20.00	-11.24	-2.38	-8.86	-1.29	4
30.00	30.00	-13.31	-3.21	-12.55	-6.45	4	30.00	30.00	-9.3	-4.89	-12.43	-1.18	4
30.00	40.00	-12.39	-2.65	-12.72	-4.16	4	30.00	40.00	-7.15	-8.64	-19.11	-0.91	4
30.00	50.00	-9.53	-2.21	-13.80	-1.76	4	30.00	50.00	-5.04	-13.2	-33.93	-0.7	4
30.00	60.00	-7.65	-2.05	-15.10	0.46	4	30.00	60.00	-3.01	-11.8	-20.89	-0.96	4
30.00	70.00	-7.16	-2.18	-14.87	2.13	4	30.00	70.00	-1.35	-8.23	-17.58	-2.12	4
30.00	80.00	-7.93	-2.64	-14.03	3.11	4	30.00	80.00	-0.24	-5.55	-16.11	-4.45	4
30.00	90.00	-9.43	-3.75	-14.21	3.30	4	30.00	90.00	0.39	-3.18	-14.29	-8.06	4
30.00	100.00	-11.26	-5.64	-16.09	2.81	4	30.00	100.00	0.42	-1.17	-11.87	-12.98	4
30.00	110.00	-12.43	-8.46	-18.00	1.88	4	30.00	110.00	-0.06	0.25	-10.13	-18.28	4
30.00	120.00	-10.45	-12.18	-14.48	0.95	4	30.00	120.00	-1.28	1.13	-9.93	-19.86	4
30.00	130.00	-7.56	-18.01	-12.26	0.39	4	30.00	130.00	-3.3	1.64	-12.92	-23.35	4
30.00	140.00	-5.45	-32.75	-13.98	0.13	4	30.00	140.00	-6.26	1.8	-11.84	-27.24	4
30.00	150.00	-3.93	-13.79	-14.59	-0.04	4	30.00	150.00	-10.32	1.47	-8.15	-13.55	4
30.00	160.00	-2.94	-7.86	-15.33	-0.41	4	30.00	160.00	-12.64	0.63	-4.99	-8.2	4
30.00	170.00	-2.60	-4.63	-15.00	-1.04	4	30.00	170.00	-9.86	-0.8	-2.8	-5.35	4
30.00	180.00	-2.79	-2.55	-13.27	-2.01	4	30.00	180.00	-6.24	-3.03	-0.89	-3.39	4
30.00	190.00	-3.68	-1.31	-10.22	-3.28	4	30.00	190.00	-3.56	-6.39	0.67	-1.96	4
30.00	200.00	-4.86	-0.69	-6.71	-4.93	4	30.00	200.00	-1.62	-13.11	1.57	-1.13	4
30.00	210.00	-6.53	-0.54	-3.48	-6.77	4	30.00	210.00	-0.13	-21.2	2.05	-0.83	4
30.00	220.00	-7.68	-0.84	-0.73	-8.70	4	30.00	220.00	0.76	-10.64	1.68	-0.59	4
30.00	230.00	-7.64	-1.55	1.12	-10.82	4	30.00	230.00	1.22	-6.18	0.71	-0.63	4
30.00	240.00	-6.78	-2.60	2.07	-12.85	4	30.00	240.00	1.4	-3.85	-0.98	-1.1	4
30.00	250.00	-5.68	-3.66	2.58	-14.52	4	30.00	250.00	1.44	-2.6	-3.71	-2.17	4
30.00	260.00	-4.41	-4.82	2.66	-14.69	4	30.00	260.00	1.32	-1.79	-7.7	-4.18	4
30.00	270.00	-3.11	-6.49	2.54	-13.24	4	30.00	270.00	0.79	-0.9	-14.49	-6.94	4
30.00	280.00	-1.86	-9.52	2.15	-10.29	4	30.00	280.00	-0.25	0.01	-29	-9.29	4
30.00	290.00	-0.84	-13.49	1.49	-7.33	4	30.00	290.00	-2.06	0.73	-12.41	-10.18	4
30.00	300.00	-0.26	-12.91	0.29	-5.22	4	30.00	300.00	-4.8	1.17	-7.54	-10.85	4

30.00	310.00	-0.16	-9.96	-1.68	-4.19	4	30.00	310.00	-8.58	1.46	-5.02	-11.53	4
30.00	320.00	-0.38	-8.01	-4.59	-3.98	4	30.00	320.00	-13.93	1.7	-4	-9.27	4
30.00	330.00	-0.80	-7.05	-8.35	-4.33	4	30.00	330.00	-20.16	1.88	-3.66	-5.93	4
30.00	340.00	-1.37	-6.40	-11.82	-5.10	4	30.00	340.00	-18.95	1.85	-3.85	-3.43	4
30.00	350.00	-2.27	-5.92	-13.11	-6.23	4	30.00	350.00	-16.1	1.45	-4.38	-1.91	4
45.00	0.00	-3.08	-5.55	-3.70	-5.08	4	45.00	0.00	-6.82	-0.94	-6.23	-2.39	4
45.00	10.00	-4.21	-4.64	-4.73	-3.69	4	45.00	10.00	-6.14	-2.65	-7.29	-1.64	4
45.00	20.00	-5.92	-3.87	-6.56	-2.37	4	45.00	20.00	-5.83	-4.89	-8.62	-1.24	4
45.00	30.00	-7.46	-3.30	-9.42	-1.22	4	45.00	30.00	-5.29	-8.12	-10.01	-1.02	4
45.00	40.00	-7.84	-3.28	-13.81	-0.14	4	45.00	40.00	-4.05	-13.64	-10.19	-0.73	4
45.00	50.00	-6.95	-3.96	-17.34	1.17	4	45.00	50.00	-2.54	-24.9	-9.57	-0.53	4
45.00	60.00	-5.78	-5.07	-12.69	2.53	4	45.00	60.00	-1.22	-17.04	-9.63	-1.05	4
45.00	70.00	-4.71	-6.54	-9.35	3.54	4	45.00	70.00	-0.21	-8.51	-10.74	-2.71	4
45.00	80.00	-4.85	-9.06	-8.36	3.89	4	45.00	80.00	0.5	-3.9	-12.76	-5.68	4
45.00	90.00	-6.53	-10.41	-9.03	3.37	4	45.00	90.00	0.47	-1.24	-17.3	-9.74	4
45.00	100.00	-8.92	-8.84	-12.77	2.35	4	45.00	100.00	-0.58	0.33	-22.19	-12.83	4
45.00	110.00	-8.99	-8.43	-14.39	1.18	4	45.00	110.00	-2.77	1.4	-19.76	-14.45	4
45.00	120.00	-7.04	-10.66	-15.17	0.47	4	45.00	120.00	-6.31	2.1	-13	-18.27	4
45.00	130.00	-5.30	-17.39	-14.32	0.35	4	45.00	130.00	-12.17	2.29	-8.57	-14.31	4
45.00	140.00	-3.93	-14.98	-12.41	0.39	4	45.00	140.00	-21.18	2.03	-5.51	-8.09	4
45.00	150.00	-3.10	-7.89	-10.10	0.13	4	45.00	150.00	-13.08	1.35	-3.28	-4.62	4
45.00	160.00	-2.87	-4.20	-7.82	-0.51	4	45.00	160.00	-8.15	0.37	-1.76	-3.04	4
45.00	170.00	-3.42	-2.30	-5.84	-1.46	4	45.00	170.00	-5.11	-1	-0.78	-2.34	4
45.00	180.00	-5.15	-1.40	-4.00	-2.78	4	45.00	180.00	-2.66	-3.27	-0.26	-2.27	4
45.00	190.00	-8.23	-1.22	-2.57	-4.35	4	45.00	190.00	-0.72	-7.29	0.03	-2.61	4
45.00	200.00	-14.25	-1.57	-1.28	-5.72	4	45.00	200.00	0.85	-14.89	0.37	-3.25	4
45.00	210.00	-23.90	-2.24	0.05	-6.85	4	45.00	210.00	1.87	-13.84	0.8	-3.69	4
45.00	220.00	-15.28	-2.97	1.46	-7.66	4	45.00	220.00	2.18	-7.12	1.06	-3.73	4
45.00	230.00	-11.48	-4.03	2.66	-8.81	4	45.00	230.00	1.82	-3.19	0.8	-3.36	4
45.00	240.00	-8.92	-5.35	3.36	-10.41	4	45.00	240.00	1.01	-0.87	-0.19	-2.94	4
45.00	250.00	-6.56	-6.99	3.48	-12.80	4	45.00	250.00	0.06	0.19	-1.99	-2.84	4
45.00	260.00	-4.30	-8.99	3.29	-15.14	4	45.00	260.00	-0.76	0.54	-4.52	-3.54	4
45.00	270.00	-2.47	-12.05	3.05	-15.94	4	45.00	270.00	-1.54	0.97	-9.39	-4.93	4
45.00	280.00	-1.25	-19.06	2.68	-13.02	4	45.00	280.00	-2.67	1.69	-28.69	-6.01	4
45.00	290.00	-0.73	-27.39	1.72	-9.63	4	45.00	290.00	-4.37	2.12	-11.58	-7.12	4
45.00	300.00	-0.83	-16.23	-0.34	-7.81	4	45.00	300.00	-7.15	2.13	-6.05	-9.62	4
45.00	310.00	-1.44	-14.20	-3.36	-7.35	4	45.00	310.00	-11.1	1.97	-4.22	-12.36	4
45.00	320.00	-2.14	-14.07	-6.35	-7.37	4	45.00	320.00	-17.68	1.88	-3.85	-10.55	4
45.00	330.00	-2.59	-12.57	-6.75	-7.50	4	45.00	330.00	-28.85	1.65	-4.31	-7.62	4
45.00	340.00	-2.66	-9.99	-5.77	-7.35	4	45.00	340.00	-14.7	1.26	-5.08	-5.82	4
45.00	350.00	-2.65	-8.66	-5.38	-7.16	4	45.00	350.00	-11.44	0.9	-5.59	-5.36	4
60.00	0.00	-2.96	-4.28	-3.68	-13.25	4	60.00	0.00	-7.66	-0.32	-7.23	-3.18	4
60.00	10.00	-2.95	-3.92	-3.96	-12.51	4	60.00	10.00	-6.15	-1.03	-6.9	-2.88	4
60.00	20.00	-3.10	-3.64	-4.84	-8.72	4	60.00	20.00	-3.87	-2.63	-6.08	-2.74	4
60.00	30.00	-3.88	-3.70	-7.58	-4.91	4	60.00	30.00	-2.39	-5.09	-5.18	-3.39	4
60.00	40.00	-4.57	-3.99	-15.11	-2.53	4	60.00	40.00	-1.67	-9.28	-4.89	-4.97	4
60.00	50.00	-4.16	-4.73	-19.10	-1.36	4	60.00	50.00	-1.49	-19.1	-5.79	-6.02	4
60.00	60.00	-2.84	-6.08	-9.73	-0.94	4	60.00	60.00	-1.23	-19.73	-8.89	-4.83	4
60.00	70.00	-1.40	-8.82	-7.44	-0.68	4	60.00	70.00	-0.27	-10.99	-14.3	-3.62	4
60.00	80.00	-1.30	-15.79	-7.23	0.08	4	60.00	80.00	0.89	-6.81	-13.88	-4.24	4
60.00	90.00	-3.10	-19.69	-6.79	1.20	4	60.00	90.00	1.2	-4.24	-12.49	-7.5	4
60.00	100.00	-6.07	-11.58	-5.43	1.83	4	60.00	100.00	-0.14	-2.39	-14.8	-14.19	4
60.00	110.00	-7.85	-10.66	-3.99	1.44	4	60.00	110.00	-2.71	-0.88	-23	-19.32	4
60.00	120.00	-9.00	-12.03	-2.83	0.60	4	60.00	120.00	-5.78	0.21	-21.51	-11.01	4
60.00	130.00	-10.48	-15.90	-1.65	0.21	4	60.00	130.00	-9.55	0.91	-12.81	-5.62	4
60.00	140.00	-10.84	-21.93	-3.78	0.16	4	60.00	140.00	-14.34	1.31	-9.46	-2.96	4

60.00	150.00	-10.41	-15.03	-4.02	0.12	4	60.00	150.00	-17.18	1.45	-6.45	-1.5	4
60.00	160.00	-10.32	-10.26	-3.46	-0.08	4	60.00	160.00	-13.46	1.17	-4.7	-0.68	4
60.00	170.00	-10.82	-8.12	-2.48	-0.40	4	60.00	170.00	-9.9	0.4	-3.58	-0.52	4
60.00	180.00	-12.23	-6.81	-1.71	-0.89	4	60.00	180.00	-6.76	-1.15	-2.73	-0.8	4
60.00	190.00	-13.67	-5.70	-0.98	-1.31	4	60.00	190.00	-4.32	-3.68	-1.97	-1.42	4
60.00	200.00	-13.93	-4.62	-0.30	-1.68	4	60.00	200.00	-2.5	-7.2	-1.12	-2.6	4
60.00	210.00	-13.56	-3.89	0.42	-2.09	4	60.00	210.00	-1.9	-8.7	-0.41	-4.02	4
60.00	220.00	-13.97	-3.69	1.08	-2.75	4	60.00	220.00	-1.82	-6.43	0.14	-5.79	4
60.00	230.00	-15.44	-4.33	1.63	-3.74	4	60.00	230.00	-1.64	-4.47	0.13	-7.3	4
60.00	240.00	-19.64	-6.03	1.95	-5.63	4	60.00	240.00	-0.74	-3.28	-0.43	-7.09	4
60.00	250.00	-24.44	-8.25	1.95	-8.97	4	60.00	250.00	0.12	-1.84	-1.49	-5.2	4
60.00	260.00	-14.75	-9.94	1.74	-12.05	4	60.00	260.00	0.18	0.01	-2.35	-4.13	4
60.00	270.00	-9.50	-10.19	1.58	-12.66	4	60.00	270.00	-0.83	1.14	-3.64	-5.19	4
60.00	280.00	-7.07	-10.15	1.00	-14.60	4	60.00	280.00	-2.58	1.58	-7.05	-7.96	4
60.00	290.00	-6.32	-11.19	-0.21	-16.37	4	60.00	290.00	-4.32	2.08	-14.52	-10.89	4
60.00	300.00	-6.29	-13.87	-2.53	-17.59	4	60.00	300.00	-5.54	2.61	-19.13	-16.67	4
60.00	310.00	-6.35	-17.97	-5.64	-19.96	4	60.00	310.00	-6.69	2.87	-14	-22.54	4
60.00	320.00	-6.31	-24.70	-8.95	-19.40	4	60.00	320.00	-8.66	2.95	-12.76	-15.82	4
60.00	330.00	-5.61	-18.35	-9.71	-17.34	4	60.00	330.00	-12.4	2.9	-11.52	-13.02	4
60.00	340.00	-4.25	-11.82	-8.53	-16.06	4	60.00	340.00	-19.75	2.52	-9.47	-9.43	4
60.00	350.00	-3.32	-7.96	-7.33	-16.23	4	60.00	350.00	-21.4	1.77	-8.23	-6.07	4
75.00	0.00	-1.01	-5.95	-1.42	-16.55	4	75.00	0.00	-7.72	-2.47	-8	0.73	4
75.00	10.00	-0.67	-5.63	-2.74	-16.28	4	75.00	10.00	-2.86	-3.8	-7.62	1.05	4
75.00	20.00	-0.82	-5.22	-5.07	-22.83	4	75.00	20.00	-0.62	-5.63	-7.61	0.59	4
75.00	30.00	-1.19	-4.98	-8.58	-15.21	4	75.00	30.00	0.49	-9.04	-8.32	-0.57	4
75.00	40.00	-1.90	-5.20	-13.9	-8.44	4	75.00	40.00	1.23	-16.54	-10.21	-2.37	4
75.00	50.00	-2.83	-5.98	-21.79	-5.52	4	75.00	50.00	1.93	-16.33	-14.29	-4.06	4
75.00	60.00	-3.72	-8.71	-16.97	-4.31	4	75.00	60.00	2.38	-9.67	-15.54	-4.51	4
75.00	70.00	-4.41	-15.78	-12.32	-3.60	4	75.00	70.00	2.23	-7.32	-11.6	-4.46	4
75.00	80.00	-3.69	-32.76	-10.16	-1.79	4	75.00	80.00	1.48	-5.54	-10.32	-5.88	4
75.00	90.00	-2.13	-19.41	-6.68	-0.06	4	75.00	90.00	0.52	-3.42	-11.04	-8.64	4
75.00	100.00	-1.65	-13.22	-3.36	-0.27	4	75.00	100.00	-0.52	-1.86	-7.3	-9.79	4
75.00	110.00	-2.9	-10.44	-3.56	-1.86	4	75.00	110.00	-2.15	-0.42	-12.1	-9.38	4
75.00	120.00	-5.28	-9.99	-3.94	-2.65	4	75.00	120.00	-5.17	0.74	-11.75	-6.55	4
75.00	130.00	-8.13	-9.88	-3.95	-1.98	4	75.00	130.00	-9.71	1.24	-6.78	-3.04	4
75.00	140.00	-10.60	-10.25	-3.13	-1.37	4	75.00	140.00	-13.53	1.31	-4.98	-0.47	4
75.00	150.00	-12.51	-12.44	-1.91	-1.33	4	75.00	150.00	-12.6	1.1	-4.41	0.79	4
75.00	160.00	-13.82	-19.19	-1.07	-1.82	4	75.00	160.00	-10.06	0.49	-4.01	1	4
75.00	170.00	-14.75	-17.80	-0.66	-2.41	4	75.00	170.00	-8.14	-0.69	-3.42	0.58	4
75.00	180.00	-15.13	-10.88	-0.66	-3.19	4	75.00	180.00	-7.4	-2.1	-2.64	-0.05	4
75.00	190.00	-14.73	-8.32	-0.74	-3.91	4	75.00	190.00	-7.63	-3.72	-1.82	-0.67	4
75.00	200.00	-13.39	-7.84	-0.59	-4.25	4	75.00	200.00	-8.11	-5.67	-1.28	-1.35	4
75.00	210.00	-12.32	-8.84	-0.05	-3.88	4	75.00	210.00	-7.16	-6.76	-1.21	-2.35	4
75.00	220.00	-12.39	-10.95	0.65	-3.31	4	75.00	220.00	-5.34	-5.14	-1.79	-3.35	4
75.00	230.00	-14.56	-14.33	1.12	-3.62	4	75.00	230.00	-4.06	-2.86	-2.61	-3.79	4
75.00	240.00	-17.21	-21.75	1.29	-5.69	4	75.00	240.00	-3.54	-1.77	-2.87	-3.37	4
75.00	250.00	-15.10	-22.93	1.40	-9.37	4	75.00	250.00	-3.12	-1.02	-2.15	-3.44	4
75.00	260.00	-13.78	-13.29	1.40	-10.55	4	75.00	260.00	-2.74	0.38	-2.22	-4.97	4
75.00	270.00	-13.59	-10.27	0.77	-12.34	4	75.00	270.00	-3	1.6	-4.25	-7.41	4
75.00	280.00	-12.26	-10.18	-0.55	-17.25	4	75.00	280.00	-3.58	2.07	-7.93	-11.85	4
75.00	290.00	-9.62	-11.55	-1.92	-22.53	4	75.00	290.00	-3.67	2.27	-10.39	-31.96	4
75.00	300.00	-8.44	-14.82	-3.39	-23.66	4	75.00	300.00	-3	2.39	-9.83	-11.24	4
75.00	310.00	-9.92	-20.24	-5.24	-18.04	4	75.00	310.00	-2.4	2.27	-8.75	-9.42	4
75.00	320.00	-13.03	-14.38	-6.58	-15.00	4	75.00	320.00	-2.89	1.9	-8.34	-13.42	4
75.00	330.00	-9.73	-9.21	-5.27	-12.52	4	75.00	330.00	-5.17	1.28	-8.77	-12.88	4
75.00	340.00	-5.75	-7.03	-3.58	-12.54	4	75.00	340.00	-9.47	0.51	-9.17	-5.86	4

75.00	350.00	-4.25	-6.21	-2.91	-13.20	4	75.00	350.00	-13.86	-0.06	-9.59	-3.54	4
90.00	0.00	-4.70	-7.51	-3.31	-11.36	4	90.00	0.00	-10.52	-1.55	-4.96	-1.64	4
90.00	10.00	-4.25	-8.18	-3.63	-13.25	4	90.00	10.00	-7.04	-2.41	-4.99	-1.3	4
90.00	20.00	-3.58	-9.57	-4.42	-18.06	4	90.00	20.00	-2.72	-4.77	-6.03	-0.89	4
90.00	30.00	-3.69	-11.32	-6.06	-32.88	4	90.00	30.00	0.41	-9.17	-8.41	-0.61	4
90.00	40.00	-4.86	-13.42	-9.43	-16.70	4	90.00	40.00	2.25	-17.77	-10.7	-0.45	4
90.00	50.00	-6.63	-15.61	-13.73	-10.08	4	90.00	50.00	3.08	-24.34	-10.59	-0.61	4
90.00	60.00	-6.96	-16.08	-10.33	-8.03	4	90.00	60.00	2.67	-14.72	-10.79	-1.46	4
90.00	70.00	-5	-15.26	-7.15	-8.58	4	90.00	70.00	1.02	-12.19	-13.74	-3.23	4
90.00	80.00	-2.35	-13.28	-6.17	-8.25	4	90.00	80.00	-0.5	-8.71	-16.17	-5.22	4
90.00	90.00	-0.88	-12.08	-5.68	-4.97	4	90.00	90.00	-0.44	-5.28	-14.71	-6.67	4
90.00	100.00	-0.37	-12.21	-5.13	-2.31	4	90.00	100.00	0.24	-3.1	-12.96	-9.09	4
90.00	110.00	0.11	-12.60	-4.21	-1.04	4	90.00	110.00	-0.26	-0.89	-11.3	-11.58	4
90.00	120.00	0.54	-12.13	-2.85	-0.85	4	90.00	120.00	-2.24	0.38	-12.68	-10.2	4
90.00	130.00	0.27	-10.63	-1.27	-1.33	4	90.00	130.00	-5.21	0.54	-11.78	-5.4	4
90.00	140.00	-1.13	-9.34	-1.15	-2.23	4	90.00	140.00	-8.55	0.33	-4.62	-1.23	4
90.00	150.00	-3.57	-8.95	-0.51	-3.31	4	90.00	150.00	-11.02	-0.01	-1.9	0.93	4
90.00	160.00	-7.06	-9.52	-0.51	-4.19	4	90.00	160.00	-11.75	-0.52	-0.81	2.07	4
90.00	170.00	-10.74	-10.59	-0.72	-4.08	4	90.00	170.00	-11.17	-0.99	-0.77	2.52	4
90.00	180.00	-15.36	-11.25	-0.66	-3.30	4	90.00	180.00	-10.17	-1.27	-1.55	2.42	4
90.00	190.00	-21.01	-10.74	-0.32	-2.32	4	90.00	190.00	-9.59	-1.97	-2.66	2.01	4
90.00	200.00	-24.21	-9.93	-0.13	-1.87	4	90.00	200.00	-10.57	-2.97	-3.02	1.24	4
90.00	210.00	-25.73	-8.70	0.01	-2.03	4	90.00	210.00	-10.94	-4.19	-2.43	0.69	4
90.00	220.00	-21.98	-7.88	-0.24	-2.66	4	90.00	220.00	-8.91	-4.5	-1.41	0.14	4
90.00	230.00	-21.38	-6.82	-0.72	-3.67	4	90.00	230.00	-6.03	-4.11	-1.49	-0.05	4
90.00	240.00	-18.81	-6.12	-1.28	-5.86	4	90.00	240.00	-4	-3.31	-2.45	0.15	4
90.00	250.00	-14.88	-5.88	-1.33	-9.78	4	90.00	250.00	-3.91	-2.7	-2.31	-0.12	4
90.00	260.00	-14.50	-5.97	-0.17	-11.71	4	90.00	260.00	-6.95	-2.6	-1.92	-2.25	4
90.00	270.00	-20.68	-5.68	0.70	-12.47	4	90.00	270.00	-12.99	-2.42	-3.6	-6.52	4
90.00	280.00	-21.63	-6.27	0.50	-14.03	4	90.00	280.00	-10.94	-1.15	-7.64	-8.1	4
90.00	290.00	-12.99	-8.85	-0.16	-13.39	4	90.00	290.00	-6.47	0.15	-10.24	-15.07	4
90.00	300.00	-11.22	-13.30	-1.61	-17.55	4	90.00	300.00	-4.56	0.95	-6.75	-13.18	4
90.00	310.00	-12.07	-15.61	-5.06	-15.17	4	90.00	310.00	-3.96	1.36	-4.57	-6.71	4
90.00	320.00	-13.35	-12.77	-11.03	-9.95	4	90.00	320.00	-3.5	1.66	-4.91	-8.29	4
90.00	330.00	-12.35	-10.19	-13.24	-7.97	4	90.00	330.00	-3.72	1.69	-7.58	-21.28	4
90.00	340.00	-10.06	-8.90	-9.39	-7.34	4	90.00	340.00	-5.87	1.17	-12.71	-9.43	4
90.00	350.00	-8.22	-8.03	-6.77	-7.72	4	90.00	350.00	-10.45	0.32	-9.17	-4.49	4
105.00	0.00	-4.22	-16.25	-7.80	-9.84	4	105.00	0.00	-8.61	-3.65	-4.67	-4.13	4
105.00	10.00	-5.36	-15.89	-8.72	-11.63	4	105.00	10.00	-3.68	-6.63	-4.81	-3.08	4
105.00	20.00	-6.82	-13.91	-12.43	-13.49	4	105.00	20.00	-1.25	-9.93	-5.58	-2.08	4
105.00	30.00	-6.48	-12.09	-22.38	-14.51	4	105.00	30.00	0.14	-16.46	-6.59	-1.77	4
105.00	40.00	-4.50	-11.03	-11.64	-11.81	4	105.00	40.00	1.05	-17.54	-8.45	-2.61	4
105.00	50.00	-2.49	-10.01	-6.18	-8.99	4	105.00	50.00	1.42	-11.15	-12.94	-4.87	4
105.00	60.00	-1.58	-9.64	-3.97	-8.01	4	105.00	60.00	1.18	-10.16	-23.38	-8.39	4
105.00	70.00	-1.37	-10.35	-3.35	-7.93	4	105.00	70.00	0.27	-8.21	-14.86	-11.11	4
105.00	80.00	-1.43	-11.36	-2.67	-6.50	4	105.00	80.00	-1.41	-6.2	-12.57	-10.65	4
105.00	90.00	-1.4	-12.39	-1.13	-2.99	4	105.00	90.00	-2.87	-3.64	-18.57	-10.47	4
105.00	100.00	-1.25	-13.40	1.28	-1.03	4	105.00	100.00	-3.74	-0.87	-8.68	-7.57	4
105.00	110.00	-1.03	-14.70	1.23	-1.45	4	105.00	110.00	-4.6	0.24	-9.32	-8.56	4
105.00	120.00	-1.18	-15.87	1.01	-3.18	4	105.00	120.00	-6.52	-0.14	-8.32	-9.97	4
105.00	130.00	-2.27	-17.05	0.70	-4.31	4	105.00	130.00	-8.71	-1.63	-4.93	-6.09	4
105.00	140.00	-4.05	-16.05	0.48	-4.25	4	105.00	140.00	-9.39	-3.83	-2.45	-2.13	4
105.00	150.00	-5.44	-14.08	0.38	-3.47	4	105.00	150.00	-8.28	-5.44	-1.37	0.39	4
105.00	160.00	-5.79	-12.15	0.49	-2.33	4	105.00	160.00	-7.16	-5.02	-1.13	1.42	4
105.00	170.00	-6.02	-10.96	0.42	-1.26	4	105.00	170.00	-6.61	-4.26	-1.1	1.45	4
105.00	180.00	-6.74	-10.03	0.04	-0.26	4	105.00	180.00	-6.45	-4.28	-1.13	0.86	4

105.00	190.00	-7.99	-9.30	-0.55	0.42	4	105.00	190.00	-6.54	-4.92	-1.81	-0.06	4
105.00	200.00	-10.14	-8.29	-1.12	0.71	4	105.00	200.00	-6.42	-6.29	-3.12	-0.97	4
105.00	210.00	-15.29	-6.80	-1.64	0.43	4	105.00	210.00	-5.91	-8.1	-4.01	-1.59	4
105.00	220.00	-28.33	-5.33	-2.16	-0.70	4	105.00	220.00	-5.36	-9.03	-3.72	-1.82	4
105.00	230.00	-14.65	-4.32	-2.52	-3.14	4	105.00	230.00	-4.99	-8.49	-3.24	-1.56	4
105.00	240.00	-9.41	-3.95	-2.76	-6.91	4	105.00	240.00	-5.06	-7.99	-3.02	-1.53	4
105.00	250.00	-7.09	-4.65	-2.60	-9.24	4	105.00	250.00	-5.71	-7.6	-3.74	-3.27	4
105.00	260.00	-7.05	-6.61	-2.34	-9.36	4	105.00	260.00	-7.26	-6.32	-6.44	-6.1	4
105.00	270.00	-8.36	-9.18	-1.87	-10.27	4	105.00	270.00	-11.55	-4.51	-9.39	-5.78	4
105.00	280.00	-9.50	-11.46	-0.95	-10.36	4	105.00	280.00	-19.21	-2.17	-10.92	-7.46	4
105.00	290.00	-10.58	-12.35	-0.87	-11.68	4	105.00	290.00	-8.14	0.04	-10.7	-18.85	4
105.00	300.00	-12.03	-12.53	-2.81	-12.90	4	105.00	300.00	-4.28	1.2	-6.83	-11.35	4
105.00	310.00	-11.98	-12.26	-7.06	-9.64	4	105.00	310.00	-3.42	1.6	-7.47	-8.16	4
105.00	320.00	-10.40	-11.63	-13.22	-7.17	4	105.00	320.00	-4.35	1.77	-12.65	-10.5	4
105.00	330.00	-7.93	-11.09	-13.97	-6.75	4	105.00	330.00	-6.51	1.76	-12.64	-22.77	4
105.00	340.00	-5.92	-11.14	-11.89	-7.29	4	105.00	340.00	-10.42	1.26	-9.51	-11.77	4
105.00	350.00	-4.98	-11.48	-11.61	-7.64	4	105.00	350.00	-14.57	0.68	-8.36	-8.42	4
120.00	0.00	-6.33	-7.88	-7.75	-5.89	4	120.00	0.00	-15.62	-2.91	-4.32	-5.35	4
120.00	10.00	-6.02	-8.10	-7.49	-6.37	4	120.00	10.00	-13.09	-3.86	-4.26	-4.6	4
120.00	20.00	-5.36	-9.53	-7.89	-7.53	4	120.00	20.00	-7.69	-5.94	-4.36	-3.56	4
120.00	30.00	-5.28	-11.90	-9.19	-9.63	4	120.00	30.00	-3.1	-7.54	-4.44	-2.8	4
120.00	40.00	-6.53	-13.63	-9.50	-14.77	4	120.00	40.00	-0.26	-7.78	-5.57	-2.65	4
120.00	50.00	-9.31	-13.18	-7.41	-20.04	4	120.00	50.00	1.42	-8.67	-9.13	-3.75	4
120.00	60.00	-11.03	-11.19	-4.72	-10.74	4	120.00	60.00	1.92	-10.56	-13.31	-6.41	4
120.00	70.00	-7.45	-9.82	-3.29	-6.81	4	120.00	70.00	0.87	-11.36	-8.87	-9.96	4
120.00	80.00	-3.81	-9.60	-2.88	-5.39	4	120.00	80.00	-1.58	-10.43	-6.3	-10.52	4
120.00	90.00	-1.67	-10.54	-2.59	-5.13	4	120.00	90.00	-4.04	-6.65	-6.15	-8.9	4
120.00	100.00	-0.98	-12.96	-1.74	-5.47	4	120.00	100.00	-4.3	-3.45	-8.04	-8.5	4
120.00	110.00	-1.16	-15.94	-0.64	-6.06	4	120.00	110.00	-2.98	-2.01	-12.53	-9.43	4
120.00	120.00	-2.02	-16.57	0.12	-4.84	4	120.00	120.00	-2.6	-1.9	-19.25	-8.79	4
120.00	130.00	-3.48	-16.12	0.82	-3.32	4	120.00	130.00	-3.93	-2.76	-13.46	-8.3	4
120.00	140.00	-5.13	-14.62	-2.23	-2.81	4	120.00	140.00	-6.72	-3.71	-8.79	-6.55	4
120.00	150.00	-5.99	-12.36	-2.44	-2.74	4	120.00	150.00	-11.18	-4.1	-7.77	-4.38	4
120.00	160.00	-5.34	-10.08	-1.84	-3.00	4	120.00	160.00	-17.72	-3.75	-6.8	-3.25	4
120.00	170.00	-3.88	-8.37	-1.67	-3.61	4	120.00	170.00	-19.45	-3.09	-6.43	-2.51	4
120.00	180.00	-2.28	-7.05	-1.74	-3.83	4	120.00	180.00	-13.67	-2.56	-6.95	-1.81	4
120.00	190.00	-1.44	-6.65	-1.93	-2.76	4	120.00	190.00	-11.27	-2.74	-8.31	-1.61	4
120.00	200.00	-1.95	-7.85	-2.31	-1.29	4	120.00	200.00	-10.07	-3.92	-9.68	-1.93	4
120.00	210.00	-3.04	-9.08	-2.55	-0.78	4	120.00	210.00	-10.57	-6.04	-9.61	-2.47	4
120.00	220.00	-4.65	-10.49	-2.63	-0.81	4	120.00	220.00	-10.69	-8.73	-8.84	-2.94	4
120.00	230.00	-5.45	-10.03	-2.40	-1.61	4	120.00	230.00	-10.03	-10.88	-6.38	-3.11	4
120.00	240.00	-5.73	-7.99	-2.29	-2.93	4	120.00	240.00	-10.09	-10.83	-3.74	-3.12	4
120.00	250.00	-6.47	-5.77	-2.75	-3.87	4	120.00	250.00	-10.35	-9.95	-2.3	-4.12	4
120.00	260.00	-8.32	-4.03	-4.10	-3.98	4	120.00	260.00	-9.21	-10.1	-3.26	-6.09	4
120.00	270.00	-12.24	-3.34	-5.16	-4.14	4	120.00	270.00	-7.6	-9.23	-6.34	-5.77	4
120.00	280.00	-12.24	-4.29	-4.88	-4.67	4	120.00	280.00	-7.74	-5.82	-8.24	-5.2	4
120.00	290.00	-7.86	-7.21	-5.05	-4.90	4	120.00	290.00	-12.26	-2.54	-10.22	-8.87	4
120.00	300.00	-6.18	-11.30	-5.82	-4.24	4	120.00	300.00	-17.95	0.02	-12.26	-18.58	4
120.00	310.00	-6.49	-13.71	-7.03	-3.88	4	120.00	310.00	-7.71	1.59	-7.1	-12.16	4
120.00	320.00	-7.81	-15.32	-9.46	-3.77	4	120.00	320.00	-4.58	1.98	-5.51	-9.57	4
120.00	330.00	-9.31	-24.17	-13.93	-3.74	4	120.00	330.00	-4.56	1.16	-6.35	-8.75	4
120.00	340.00	-9.94	-17.69	-11.41	-3.75	4	120.00	340.00	-7.22	-0.25	-6.24	-10.44	4
120.00	350.00	-9.80	-10.04	-7.75	-4.20	4	120.00	350.00	-11.73	-1.26	-5.05	-11.43	4
135.00	0.00	-7.60	-8.13	-7.61	-5.44	4	135.00	0.00	-6.7	-4.51	-0.08	-0.69	4
135.00	10.00	-6.36	-5.96	-5.73	-9.16	4	135.00	10.00	-4.59	-5.02	-0.65	0	4
135.00	20.00	-6.07	-4.70	-5.33	-16.14	4	135.00	20.00	-3.93	-5.1	-2.38	0.22	4

135.00	30.00	-6.93	-4.16	-6.20	-23.03	4	135.00	30.00	-3.42	-5.28	-5.46	0.06	4
135.00	40.00	-9.29	-4.21	-8.52	-11.62	4	135.00	40.00	-2.05	-5.97	-9.28	-0.58	4
135.00	50.00	-14.48	-4.69	-11.73	-7.30	4	135.00	50.00	-1.02	-7.62	-10.53	-1.8	4
135.00	60.00	-22.13	-5.78	-15.22	-6.13	4	135.00	60.00	-1.27	-11.86	-7.89	-3.58	4
135.00	70.00	-15.30	-7.88	-14.02	-7.63	4	135.00	70.00	-2.56	-32.21	-5.8	-5.53	4
135.00	80.00	-9.92	-11.12	-8.43	-11.29	4	135.00	80.00	-3.86	-12.49	-5.75	-8.28	4
135.00	90.00	-6.26	-13.85	-2.27	-11.55	4	135.00	90.00	-4.99	-7.26	-15.12	-11.51	4
135.00	100.00	-3.84	-12.87	-2.62	-9.55	4	135.00	100.00	-5.76	-5.1	-16.82	-7.24	4
135.00	110.00	-2.60	-12.30	-2.65	-7.20	4	135.00	110.00	-6.59	-4.43	-12.78	-5.19	4
135.00	120.00	-2.20	-13.52	-3.04	-6.22	4	135.00	120.00	-8.8	-5.35	-10.2	-5.77	4
135.00	130.00	-2.04	-17.90	-3.72	-6.37	4	135.00	130.00	-14.13	-7.97	-8.53	-6.85	4
135.00	140.00	-1.47	-20.55	-4.66	-6.83	4	135.00	140.00	-19.8	-13.53	-7.31	-6.43	4
135.00	150.00	-0.55	-12.51	-5.41	-6.98	4	135.00	150.00	-15.88	-13.76	-6.73	-5.41	4
135.00	160.00	0.18	-8.05	-5.57	-6.68	4	135.00	160.00	-13.85	-8.16	-7.07	-4.43	4
135.00	170.00	0.48	-5.66	-5.33	-6.11	4	135.00	170.00	-13.99	-5.58	-8.17	-3.7	4
135.00	180.00	0.32	-4.51	-4.97	-5.67	4	135.00	180.00	-14.71	-5.13	-10.22	-3.32	4
135.00	190.00	-0.15	-4.34	-4.63	-5.45	4	135.00	190.00	-13.98	-6.68	-12.97	-3.51	4
135.00	200.00	-0.54	-4.92	-4.59	-5.53	4	135.00	200.00	-11.15	-10.38	-13.58	-3.94	4
135.00	210.00	-0.64	-6.07	-4.53	-5.80	4	135.00	210.00	-9.23	-17.41	-10.9	-4.07	4
135.00	220.00	-0.69	-7.25	-4.07	-6.00	4	135.00	220.00	-9.23	-23.97	-7.93	-4.06	4
135.00	230.00	-1.24	-7.57	-3.32	-5.25	4	135.00	230.00	-12.04	-19.73	-5.58	-4.32	4
135.00	240.00	-2.39	-6.85	-3.09	-3.80	4	135.00	240.00	-20.02	-17.87	-4.33	-5.66	4
135.00	250.00	-4.43	-5.67	-3.39	-2.66	4	135.00	250.00	-11.62	-18.84	-4.54	-8.08	4
135.00	260.00	-7.16	-4.90	-4.01	-2.38	4	135.00	260.00	-6.67	-17.07	-5.87	-8.79	4
135.00	270.00	-11.15	-4.71	-4.78	-2.98	4	135.00	270.00	-5.11	-10.44	-7.14	-7.82	4
135.00	280.00	-17.23	-6.06	-6.28	-3.63	4	135.00	280.00	-6.12	-5.55	-7.81	-9.84	4
135.00	290.00	-26.80	-9.33	-8.62	-3.07	4	135.00	290.00	-10	-2.64	-10.36	-15.88	4
135.00	300.00	-19.72	-15.02	-9.96	-1.77	4	135.00	300.00	-14.51	-0.6	-14.88	-11.98	4
135.00	310.00	-17.28	-15.94	-8.59	-0.92	4	135.00	310.00	-10.64	0.5	-13.77	-7.93	4
135.00	320.00	-15.90	-14.15	-7.53	-0.83	4	135.00	320.00	-8.48	0.8	-10.31	-6.06	4
135.00	330.00	-13.55	-15.17	-8.87	-1.32	4	135.00	330.00	-9.05	0.3	-6.16	-4.74	4
135.00	340.00	-11.43	-17.06	-11.15	-1.87	4	135.00	340.00	-10.7	-0.77	-2.82	-3.48	4
135.00	350.00	-9.88	-16.70	-11.29	-2.33	4	135.00	350.00	-10.41	-1.52	-1.36	-2.75	4
150.00	0.00	-5.48	-9.06	-5.59	-9.66	4	150.00	0.00	0.4	-0.95	-3.2	-3.45	4
150.00	10.00	-4.84	-8.16	-4.72	-11.68	4	150.00	10.00	0.9	-1.15	-3.23	-3.19	4
150.00	20.00	-4.14	-6.56	-3.17	-18.43	4	150.00	20.00	1.62	-2.04	-4.1	-3.13	4
150.00	30.00	-3.99	-5.26	-1.98	-24.33	4	150.00	30.00	1.88	-3.44	-6.41	-3.84	4
150.00	40.00	-4.55	-4.18	-1.50	-14.73	4	150.00	40.00	1.45	-5.57	-10.65	-5.53	4
150.00	50.00	-5.61	-3.52	-1.54	-11.73	4	150.00	50.00	0.52	-8.68	-15.37	-7.73	4
150.00	60.00	-6.54	-3.37	-1.92	-11.83	4	150.00	60.00	-0.59	-13.85	-13.54	-9.19	4
150.00	70.00	-6.19	-3.72	-2.35	-15.08	4	150.00	70.00	-1.69	-22.94	-10.67	-8.83	4
150.00	80.00	-4.49	-4.52	-2.16	-17.92	4	150.00	80.00	-3.02	-19.64	-10.31	-8.24	4
150.00	90.00	-2.63	-5.24	-1.51	-10.65	4	150.00	90.00	-5.29	-14.7	-12.67	-8.5	4
150.00	100.00	-1.27	-5.78	-0.76	-6.79	4	150.00	100.00	-9.59	-12.14	-19.74	-10.5	4
150.00	110.00	-0.68	-6.58	-0.44	-6.03	4	150.00	110.00	-14.88	-10.72	-14.09	-12.6	4
150.00	120.00	-0.59	-7.60	-0.77	-8.40	4	150.00	120.00	-12.07	-9.78	-7.81	-8.43	4
150.00	130.00	-0.91	-8.98	-1.79	-12.23	4	150.00	130.00	-8.73	-9.47	-4.81	-5.22	4
150.00	140.00	-1.28	-10.16	-2.71	-11.86	4	150.00	140.00	-7.08	-9.34	-3.59	-4.01	4
150.00	150.00	-1.54	-11.94	-15.49	-9.36	4	150.00	150.00	-6.09	-8.87	-2.86	-3.9	4
150.00	160.00	-1.23	-13.90	-14.69	-7.58	4	150.00	160.00	-5.05	-8.22	-2.74	-4.29	4
150.00	170.00	-0.59	-16.93	-10.41	-6.59	4	150.00	170.00	-3.91	-7.46	-3.12	-4.64	4
150.00	180.00	0.05	-21.15	-6.94	-6.61	4	150.00	180.00	-2.65	-7.03	-4.04	-4.3	4
150.00	190.00	0.53	-26.46	-4.64	-7.52	4	150.00	190.00	-1.82	-7.13	-5.72	-3.4	4
150.00	200.00	0.78	-28.40	-3.12	-8.68	4	150.00	200.00	-1.39	-7.13	-8.75	-2.62	4
150.00	210.00	0.81	-24.78	-2.12	-9.09	4	150.00	210.00	-1.57	-7.63	-14.16	-2.28	4
150.00	220.00	0.61	-22.65	-1.72	-8.11	4	150.00	220.00	-2.4	-8.12	-16.88	-1.98	4

150.00	230.00	0.20	-18.11	-1.95	-5.63	4	150.00	230.00	-4.1	-8.68	-11.03	-2.29	4
150.00	240.00	-0.34	-13.57	-2.70	-3.35	4	150.00	240.00	-6.97	-9.69	-7.34	-3.3	4
150.00	250.00	-1.12	-10.33	-3.77	-1.80	4	150.00	250.00	-9.67	-11.19	-5.29	-5.27	4
150.00	260.00	-2.19	-8.30	-4.68	-1.12	4	150.00	260.00	-7.46	-13.76	-4.53	-7.94	4
150.00	270.00	-3.61	-7.00	-5.46	-1.35	4	150.00	270.00	-4.11	-17.88	-4.8	-10.4	4
150.00	280.00	-5.34	-6.25	-6.36	-2.53	4	150.00	280.00	-2.13	-20.27	-5.83	-11.5	4
150.00	290.00	-7.31	-6.21	-7.63	-4.10	4	150.00	290.00	-1.47	-13.78	-7.64	-13.51	4
150.00	300.00	-9.05	-6.83	-9.87	-5.07	4	150.00	300.00	-1.75	-8.6	-9.19	-19.58	4
150.00	310.00	-10.06	-8.43	-14.09	-4.79	4	150.00	310.00	-2.67	-5.23	-10.2	-17.68	4
150.00	320.00	-10.38	-11.36	-23.23	-4.19	4	150.00	320.00	-3.75	-2.86	-10.13	-11.77	4
150.00	330.00	-9.99	-17.06	-20.08	-4.04	4	150.00	330.00	-4.54	-1.15	-9.16	-8.66	4
150.00	340.00	-9.05	-24.73	-14.00	-4.56	4	150.00	340.00	-4.33	-0.17	-7.4	-6.59	4
150.00	350.00	-7.78	-15.75	-10.68	-5.66	4	150.00	350.00	-2.97	0.17	-5.29	-5.12	4
165.00	0.00	-5.20	-7.17	-8.18	-9.08	4	165.00	0.00	-5.57	-7.45	-2.71	-0.44	4
165.00	10.00	-3.60	-6.34	-5.30	-13.82	4	165.00	10.00	-4.52	-8.73	-3.3	-0.17	4
165.00	20.00	-2.08	-5.89	-3.22	-19.06	4	165.00	20.00	-4.04	-10.87	-4.52	-0.27	4
165.00	30.00	-0.82	-5.55	-1.97	-15.02	4	165.00	30.00	-3.86	-14.76	-6.33	-0.91	4
165.00	40.00	0.11	-5.29	-1.39	-10.91	4	165.00	40.00	-4.03	-21.29	-9.19	-2.2	4
165.00	50.00	0.83	-4.83	-1.44	-8.81	4	165.00	50.00	-4.61	-22.51	-14.19	-4.27	4
165.00	60.00	1.33	-4.07	-2.14	-8.18	4	165.00	60.00	-5.97	-16.47	-25.13	-7.52	4
165.00	70.00	1.53	-3.29	-3.37	-8.78	4	165.00	70.00	-8.57	-13.37	-20.63	-12.08	4
165.00	80.00	1.43	-2.62	-5.38	-10.63	4	165.00	80.00	-14	-11.55	-14.89	-17.11	4
165.00	90.00	1.01	-2.26	-9.49	-13.00	4	165.00	90.00	-29.51	-10.45	-9.08	-14.03	4
165.00	100.00	0.27	-2.22	-11.98	-15.48	4	165.00	100.00	-16.61	-9.43	-10.2	-10.52	4
165.00	110.00	-0.78	-2.55	-15.56	-17.79	4	165.00	110.00	-11.27	-8.58	-11.37	-8.24	4
165.00	120.00	-2.02	-3.04	-18.42	-18.41	4	165.00	120.00	-8.69	-7.76	-12.37	-7.18	4
165.00	130.00	-3.27	-3.88	-19.91	-17.10	4	165.00	130.00	-7.47	-6.91	-12.87	-6.83	4
165.00	140.00	-4.48	-5.01	-20.18	-15.90	4	165.00	140.00	-7.04	-5.97	-13.26	-7.13	4
165.00	150.00	-5.65	-6.52	-19.70	-15.41	4	165.00	150.00	-6.89	-5.51	-14.13	-7.85	4
165.00	160.00	-6.59	-8.43	-18.16	-15.43	4	165.00	160.00	-7.02	-5.45	-15.25	-8.49	4
165.00	170.00	-7.53	-10.92	-16.10	-15.13	4	165.00	170.00	-7.61	-5.78	-16.67	-8.91	4
165.00	180.00	-8.19	-14.02	-13.78	-15.03	4	165.00	180.00	-8.34	-6.64	-15.24	-9.22	4
165.00	190.00	-8.64	-16.45	-12.38	-13.90	4	165.00	190.00	-9.39	-7.84	-12.32	-9.51	4
165.00	200.00	-9.00	-16.12	-11.26	-12.01	4	165.00	200.00	-10.69	-9.86	-9.88	-10.76	4
165.00	210.00	-9.31	-13.69	-10.33	-10.97	4	165.00	210.00	-12.47	-12.84	-8.39	-11.69	4
165.00	220.00	-9.38	-11.83	-9.41	-9.52	4	165.00	220.00	-14.6	-15.63	-8.26	-14.35	4
165.00	230.00	-9.49	-10.92	-8.42	-8.21	4	165.00	230.00	-15.49	-16.58	-9.32	-19.86	4
165.00	240.00	-10.05	-11.19	-7.75	-7.42	4	165.00	240.00	-13.72	-15.56	-10.45	-28.24	4
165.00	250.00	-10.72	-12.05	-7.76	-7.18	4	165.00	250.00	-11.2	-14.37	-9.92	-22.32	4
165.00	260.00	-11.08	-14.12	-8.37	-7.28	4	165.00	260.00	-9.23	-14.02	-8.04	-17.22	4
165.00	270.00	-10.71	-17.09	-9.54	-7.04	4	165.00	270.00	-8.09	-14.71	-6.32	-14.69	4
165.00	280.00	-9.53	-21.33	-11.57	-6.28	4	165.00	280.00	-7.96	-17.36	-5.13	-13.08	4
165.00	290.00	-8.35	-24.52	-14.33	-5.25	4	165.00	290.00	-8.69	-21.97	-4.28	-11.79	4
165.00	300.00	-7.43	-21.08	-17.28	-4.19	4	165.00	300.00	-10.38	-23.28	-3.79	-9.49	4
165.00	310.00	-7.01	-17.77	-20.83	-3.42	4	165.00	310.00	-11.96	-16.59	-3.32	-7.09	4
165.00	320.00	-7.10	-15.17	-26.00	-3.20	4	165.00	320.00	-11.69	-12.54	-2.92	-5.03	4
165.00	330.00	-7.37	-13.11	-24.76	-3.55	4	165.00	330.00	-9.57	-9.79	-2.61	-3.57	4
165.00	340.00	-7.64	-11.21	-17.86	-4.43	4	165.00	340.00	-7.62	-8.64	-2.55	-2.5	4
165.00	350.00	-7.60	-10.31	-15.08	-5.21	4	165.00	350.00	-6.23	-8.32	-2.56	-2.09	4
180.00	0.00	-4.58	-16.69	-6.21	-12.88	4	180.00	0.00	0.92	-2.49	-3.19	-4.47	4
180.00	10.00	-4.54	-13.64	-5.39	-13.24	4	180.00	10.00	0.87	-2.54	-3.69	-4.59	4
180.00	20.00	-3.95	-9.49	-3.94	-12.76	4	180.00	20.00	0.64	-2.93	-4.63	-4.46	4
180.00	30.00	-2.91	-6.68	-2.72	-10.85	4	180.00	30.00	0.29	-3.77	-5.76	-4.47	4
180.00	40.00	-1.77	-4.86	-1.83	-8.74	4	180.00	40.00	-0.29	-5	-7.42	-4.69	4
180.00	50.00	-0.82	-3.69	-1.15	-6.82	4	180.00	50.00	-1.02	-6.81	-9.99	-5.36	4
180.00	60.00	-0.12	-2.91	-0.80	-5.14	4	180.00	60.00	-1.89	-9.13	-14.79	-6.38	4

180.00	70.00	0.38	-2.49	-0.63	-3.78	4	180.00	70.00	-2.99	-12.85	-29.13	-7.81	4
180.00	80.00	0.75	-2.34	-0.77	-2.79	4	180.00	80.00	-4.08	-17.16	-19.56	-9.54	4
180.00	90.00	0.84	-2.53	-1.22	-2.17	4	180.00	90.00	-4.85	-17.25	-12.15	-11.54	4
180.00	100.00	0.73	-2.92	-1.82	-1.90	4	180.00	100.00	-4.75	-12.59	-8.38	-12.57	4
180.00	110.00	0.54	-3.47	-2.69	-1.94	4	180.00	110.00	-4.07	-9.16	-5.82	-11.53	4
180.00	120.00	0.20	-4.14	-3.89	-2.40	4	180.00	120.00	-2.95	-6.87	-4.02	-9.54	4
180.00	130.00	-0.28	-5.14	-5.59	-3.07	4	180.00	130.00	-1.79	-5.34	-2.64	-7.93	4
180.00	140.00	-0.99	-6.61	-8.43	-3.89	4	180.00	140.00	-0.73	-4.39	-1.47	-6.66	4
180.00	150.00	-1.93	-8.79	-20.19	-4.91	4	180.00	150.00	0.18	-3.65	-2.85	-5.73	4
180.00	160.00	-2.92	-11.89	-13.83	-6.26	4	180.00	160.00	0.96	-3.16	-3.33	-5.13	4
180.00	170.00	-3.75	-15.63	-9.81	-7.46	4	180.00	170.00	1.59	-2.83	-3.76	-4.78	4
180.00	180.00	-4.45	-16.77	-7.04	-8.34	4	180.00	180.00	1.97	-2.69	-4.25	-4.47	4
180.00	190.00	-4.53	-12.92	-5.19	-9.05	4	180.00	190.00	2.13	-2.85	-5.02	-4.1	4
180.00	200.00	-3.87	-9.88	-4.06	-9.06	4	180.00	200.00	2.11	-2.83	-6.32	-3.87	4
180.00	210.00	-2.79	-7.21	-3.17	-8.27	4	180.00	210.00	1.84	-3.22	-8.72	-4.21	4
180.00	220.00	-1.61	-5.16	-2.39	-7.47	4	180.00	220.00	1.38	-3.9	-12.81	-4.51	4
180.00	230.00	-0.47	-3.62	-1.87	-6.53	4	180.00	230.00	0.7	-4.85	-21.9	-5	4
180.00	240.00	0.58	-2.44	-1.78	-5.73	4	180.00	240.00	-0.27	-6.38	-19.97	-5.49	4
180.00	250.00	1.43	-1.65	-2.19	-5.26	4	180.00	250.00	-1.53	-8.76	-11.18	-6.12	4
180.00	260.00	1.95	-1.17	-3.04	-4.86	4	180.00	260.00	-2.94	-12.3	-7.3	-6.7	4
180.00	270.00	2.26	-1.00	-4.36	-4.64	4	180.00	270.00	-4.3	-17.06	-5.07	-7.32	4
180.00	280.00	2.33	-1.10	-6.18	-4.48	4	180.00	280.00	-5.01	-16.54	-3.77	-7.8	4
180.00	290.00	2.17	-1.44	-8.70	-4.58	4	180.00	290.00	-4.65	-11.77	-2.88	-8.12	4
180.00	300.00	1.80	-2.01	-12.52	-4.97	4	180.00	300.00	-3.5	-8.4	-2.22	-8.07	4
180.00	310.00	1.17	-2.91	-19.53	-5.73	4	180.00	310.00	-2.21	-6.18	-1.88	-7.74	4
180.00	320.00	0.35	-4.13	-28.29	-6.65	4	180.00	320.00	-1.11	-4.68	-1.72	-7.26	4
180.00	330.00	-0.70	-5.93	-15.53	-7.62	4	180.00	330.00	-0.25	-3.63	-1.81	-6.73	4
180.00	340.00	-1.98	-8.75	-10.90	-8.66	4	180.00	340.00	0.32	-2.91	-2.22	-6.26	4
180.00	350.00	-3.23	-13.97	-8.13	-9.81	4	180.00	350.00	0.64	-2.53	-2.78	-5.83	4

2442MHz

Theta Plorization							Phi Plorization						
Angle (θ)	Angle (ψ)	Max Gain(dBi)				N_{ANT}	Angle (θ)	Angle (ψ)	Max Gain(dBi)				N_{ANT}
		Ant 1(G1)	Ant 2(G2)	Ant 3(G3)	Ant 4(G4)				Ant 1(G1)	Ant 2(G2)	Ant 3(G3)	Ant 4(G4)	
0.00	0.00	-1.07	-1.49	-15.57	-7.16	4	0.00	0.00	-9.56	-2.03	-2.99	-2.23	4
0.00	10.00	-1.22	-0.95	-13.35	-8.56	4	0.00	10.00	-8.12	-2.86	-3.19	-1.99	4
0.00	20.00	-1.86	-0.06	-10.08	-12.50	4	0.00	20.00	-5.62	-4.95	-3.75	-1.83	4
0.00	30.00	-2.82	0.72	-7.83	-20.09	4	0.00	30.00	-4.06	-7.88	-4.52	-1.98	4
0.00	40.00	-4.12	1.17	-6.15	-22.04	4	0.00	40.00	-2.86	-11.02	-5.54	-2.42	4
0.00	50.00	-5.92	1.31	-5.02	-13.55	4	0.00	50.00	-2.07	-11.47	-6.88	-2.87	4
0.00	60.00	-8.42	1.04	-4.20	-9.40	4	0.00	60.00	-1.46	-9.04	-9.06	-3.38	4
0.00	70.00	-11.85	0.37	-3.62	-6.82	4	0.00	70.00	-1.01	-6.21	-13.56	-4.06	4
0.00	80.00	-16.34	-0.53	-3.47	-4.95	4	0.00	80.00	-0.79	-3.76	-24.41	-4.88	4
0.00	90.00	-16.07	-1.80	-3.51	-3.44	4	0.00	90.00	-0.83	-1.81	-19.94	-5.95	4
0.00	100.00	-11.62	-3.32	-3.79	-2.27	4	0.00	100.00	-1.2	-0.29	-11.91	-7.13	4
0.00	110.00	-8.17	-5.20	-4.44	-1.48	4	0.00	110.00	-1.93	0.7	-8.22	-8.51	4
0.00	120.00	-5.66	-7.48	-5.32	-1.12	4	0.00	120.00	-3.08	1.3	-5.91	-9.15	4
0.00	130.00	-4.00	-9.24	-6.44	-1.21	4	0.00	130.00	-4.7	1.54	-4.4	-8.08	4
0.00	140.00	-2.72	-8.90	-8.22	-1.61	4	0.00	140.00	-6.81	1.49	-3.4	-6.41	4
0.00	150.00	-1.83	-6.74	-10.20	-2.18	4	0.00	150.00	-9.36	1.19	-2.4	-5.07	4
0.00	160.00	-1.24	-4.65	-13.06	-2.71	4	0.00	160.00	-11.27	0.62	-1.81	-4.11	4
0.00	170.00	-0.89	-3.11	-16.29	-3.44	4	0.00	170.00	-10.29	-0.18	-1.2	-3.48	4
0.00	180.00	-0.79	-1.89	-19.25	-4.46	4	0.00	180.00	-7.77	-1.27	-0.84	-3.04	4
0.00	190.00	-1.01	-1.03	-15.44	-5.78	4	0.00	190.00	-5.35	-2.85	-0.72	-2.55	4
0.00	200.00	-1.62	-0.35	-10.25	-7.99	4	0.00	200.00	-3.5	-4.95	-0.76	-1.65	4
0.00	210.00	-2.61	0.23	-6.78	-9.50	4	0.00	210.00	-2.19	-7.94	-1.35	-1	4
0.00	220.00	-4.00	0.64	-4.50	-9.51	4	0.00	220.00	-1.4	-10.54	-2.42	-0.64	4
0.00	230.00	-5.98	0.90	-3.00	-8.08	4	0.00	230.00	-0.95	-9.36	-3.86	-0.62	4
0.00	240.00	-8.48	0.87	-2.03	-6.49	4	0.00	240.00	-0.67	-6.53	-5.62	-0.88	4
0.00	250.00	-11.76	0.58	-1.44	-5.02	4	0.00	250.00	-0.56	-4.18	-8	-1.44	4
0.00	260.00	-14.21	-0.07	-1.25	-3.81	4	0.00	260.00	-0.64	-2.54	-10.84	-2.56	4
0.00	270.00	-12.71	-1.06	-1.35	-2.82	4	0.00	270.00	-0.93	-1.47	-12.89	-4.22	4
0.00	280.00	-9.55	-2.49	-1.78	-2.01	4	0.00	280.00	-1.51	-0.68	-10.53	-6.64	4
0.00	290.00	-7.11	-4.24	-2.42	-1.35	4	0.00	290.00	-2.38	-0.15	-7.4	-10.54	4
0.00	300.00	-5.23	-6.42	-3.36	-1.00	4	0.00	300.00	-3.72	0.34	-4.21	-17.89	4
0.00	310.00	-3.93	-8.57	-4.66	-0.89	4	0.00	310.00	-5.48	0.68	-2.76	-21.1	4
0.00	320.00	-2.95	-9.66	-6.45	-0.95	4	0.00	320.00	-7.66	0.85	-1.81	-11.82	4
0.00	330.00	-2.26	-8.42	-9.12	-1.26	4	0.00	330.00	-10.85	0.88	-1.29	-7.35	4
0.00	340.00	-1.72	-6.31	-12.64	-1.98	4	0.00	340.00	-14.72	0.63	-1.11	-4.68	4
0.00	350.00	-1.32	-4.17	-16.80	-3.17	4	0.00	350.00	-15.3	0.03	-1.27	-3.14	4
15.00	0.00	-4.67	-3.11	-14.44	-5.25	4	15.00	0.00	-10.93	-0.95	-5.78	-2.59	4
15.00	10.00	-5.09	-1.79	-12.23	-6.47	4	15.00	10.00	-7.51	-2.46	-7.77	-1.56	4
15.00	20.00	-5.22	-0.77	-10.34	-7.51	4	15.00	20.00	-5.27	-4.44	-10.12	-1	4
15.00	30.00	-5.51	-0.15	-9.07	-7.40	4	15.00	30.00	-3.53	-6.71	-11.92	-0.81	4
15.00	40.00	-6.07	0.09	-8.07	-6.03	4	15.00	40.00	-2.09	-9.16	-12.54	-0.91	4
15.00	50.00	-7.22	-0.10	-7.57	-4.34	4	15.00	50.00	-0.93	-9.79	-13.42	-1.21	4
15.00	60.00	-9.26	-0.54	-7.40	-2.84	4	15.00	60.00	-0.01	-7.58	-16.06	-1.86	4
15.00	70.00	-12.74	-1.15	-7.00	-1.48	4	15.00	70.00	0.63	-4.59	-25.63	-3.16	4
15.00	80.00	-17.50	-1.90	-6.70	-0.38	4	15.00	80.00	0.88	-2.18	-22.05	-5.26	4
15.00	90.00	-15.44	-3.03	-6.52	0.50	4	15.00	90.00	0.73	-0.4	-12.99	-7.98	4
15.00	100.00	-10.02	-4.72	-6.56	0.89	4	15.00	100.00	0.1	0.85	-9.05	-10.26	4
15.00	110.00	-6.38	-7.45	-7.19	0.96	4	15.00	110.00	-1.04	1.54	-7.44	-10.91	4
15.00	120.00	-3.91	-11.34	-8.36	0.87	4	15.00	120.00	-2.66	1.86	-6.06	-9.77	4
15.00	130.00	-2.23	-13.76	-9.59	0.68	4	15.00	130.00	-5.05	1.82	-5.12	-8.07	4
15.00	140.00	-1.06	-10.67	-10.77	0.41	4	15.00	140.00	-8.81	1.47	-4.53	-6.47	4

15.00	150.00	-0.28	-6.85	-11.69	0.03	4	15.00	150.00	-14.33	0.81	-3.84	-5.1	4
15.00	160.00	0.07	-4.28	-12.74	-0.51	4	15.00	160.00	-14.3	-0.11	-2.97	-3.96	4
15.00	170.00	0.14	-2.48	-14.26	-1.33	4	15.00	170.00	-8.76	-1.31	-1.96	-3.11	4
15.00	180.00	-0.16	-1.33	-13.69	-2.47	4	15.00	180.00	-5.17	-2.85	-0.86	-2.38	4
15.00	190.00	-0.81	-0.66	-10.09	-3.79	4	15.00	190.00	-2.68	-4.62	0.04	-1.63	4
15.00	200.00	-1.86	-0.26	-7.04	-5.13	4	15.00	200.00	-0.99	-7.04	0.56	-0.89	4
15.00	210.00	-3.48	-0.03	-4.81	-6.27	4	15.00	210.00	0.31	-10.09	0.43	-0.28	4
15.00	220.00	-5.63	0.04	-3.00	-6.92	4	15.00	220.00	1.2	-11.32	-0.36	0.02	4
15.00	230.00	-8.65	0.08	-1.50	-7.02	4	15.00	230.00	1.81	-8.76	-1.85	-0.11	4
15.00	240.00	-12.17	-0.08	-0.36	-6.59	4	15.00	240.00	2.25	-5.17	-3.97	-0.64	4
15.00	250.00	-12.86	-0.40	0.38	-6.05	4	15.00	250.00	2.34	-2.46	-7.4	-1.52	4
15.00	260.00	-9.48	-1.06	0.71	-5.26	4	15.00	260.00	2.06	-0.41	-12.61	-2.62	4
15.00	270.00	-6.53	-2.09	0.69	-4.39	4	15.00	270.00	1.42	0.91	-19.14	-4.08	4
15.00	280.00	-4.54	-3.42	0.34	-3.62	4	15.00	280.00	0.32	1.75	-12.84	-5.91	4
15.00	290.00	-3.33	-5.02	-0.38	-3.12	4	15.00	290.00	-1.14	2.14	-8.37	-8.16	4
15.00	300.00	-2.66	-6.61	-1.91	-2.70	4	15.00	300.00	-3.07	2.28	-4.92	-11.16	4
15.00	310.00	-2.40	-8.13	-3.54	-2.51	4	15.00	310.00	-5.6	2.21	-3.61	-15.9	4
15.00	320.00	-2.55	-8.99	-5.87	-2.61	4	15.00	320.00	-9.04	2.03	-2.94	-16.9	4
15.00	330.00	-2.99	-8.34	-8.81	-3.02	4	15.00	330.00	-14.56	1.74	-2.76	-11	4
15.00	340.00	-3.58	-7.03	-12.25	-3.62	4	15.00	340.00	-25.7	1.28	-2.93	-7.45	4
15.00	350.00	-3.95	-6.29	-13.54	-4.11	4	15.00	350.00	-34.77	1.02	-3.23	-5.96	4
30.00	0.00	-5.91	-5.13	-10.96	-9.75	4	30.00	0.00	-12.35	1.04	-6.34	-1.83	4
30.00	10.00	-7.15	-4.54	-11.06	-10.14	4	30.00	10.00	-11.3	0.41	-6.76	-1.55	4
30.00	20.00	-10.10	-3.72	-10.58	-9.58	4	30.00	20.00	-9.66	-0.97	-8.01	-1.14	4
30.00	30.00	-12.16	-3.05	-10.32	-7.44	4	30.00	30.00	-7.92	-3.1	-9.89	-0.71	4
30.00	40.00	-10.44	-2.90	-10.58	-4.64	4	30.00	40.00	-6.05	-6.03	-13.39	-0.15	4
30.00	50.00	-8.24	-2.95	-11.38	-1.92	4	30.00	50.00	-4.24	-9.64	-19.17	0.15	4
30.00	60.00	-7.20	-3.08	-13.13	0.44	4	30.00	60.00	-2.4	-10.58	-23.17	-0.17	4
30.00	70.00	-7.49	-3.03	-14.05	2.13	4	30.00	70.00	-0.91	-7.82	-18.45	-1.47	4
30.00	80.00	-9.06	-3.15	-13.82	3.05	4	30.00	80.00	0.14	-5.29	-16.12	-3.89	4
30.00	90.00	-12.10	-3.74	-14.38	3.16	4	30.00	90.00	0.7	-3.04	-14.69	-7.48	4
30.00	100.00	-17.30	-5.50	-17.20	2.62	4	30.00	100.00	0.73	-1.31	-13.67	-11.6	4
30.00	110.00	-22.39	-8.64	-21.37	1.80	4	30.00	110.00	0.24	0.07	-13.08	-14.77	4
30.00	120.00	-12.69	-13.34	-15.10	1.12	4	30.00	120.00	-1.01	0.97	-14.32	-16.73	4
30.00	130.00	-7.96	-20.48	-11.99	0.83	4	30.00	130.00	-3.17	1.56	-21.01	-21.76	4
30.00	140.00	-5.27	-21.84	-16.14	0.80	4	30.00	140.00	-6.15	1.78	-14.38	-17.91	4
30.00	150.00	-3.51	-12.90	-17.71	0.62	4	30.00	150.00	-10	1.49	-8.81	-9.8	4
30.00	160.00	-2.49	-8.17	-18.02	0.21	4	30.00	160.00	-11.8	0.6	-4.81	-5.83	4
30.00	170.00	-2.09	-5.16	-16.84	-0.58	4	30.00	170.00	-9.58	-0.97	-2.17	-3.88	4
30.00	180.00	-2.25	-3.15	-13.97	-1.73	4	30.00	180.00	-6.52	-3.47	-0.09	-2.88	4
30.00	190.00	-3.08	-1.85	-10.13	-3.23	4	30.00	190.00	-4.21	-7.26	1.37	-2.2	4
30.00	200.00	-4.14	-0.98	-6.79	-4.93	4	30.00	200.00	-2.5	-14.45	2.39	-1.42	4
30.00	210.00	-5.46	-0.58	-4.04	-6.94	4	30.00	210.00	-1.17	-20.61	2.91	-0.63	4
30.00	220.00	-6.51	-0.69	-1.40	-8.97	4	30.00	220.00	-0.22	-10.13	2.6	0.04	4
30.00	230.00	-6.83	-1.20	0.67	-11.02	4	30.00	230.00	0.41	-6.13	1.67	0.44	4
30.00	240.00	-6.77	-1.94	1.98	-12.86	4	30.00	240.00	0.89	-3.99	0.11	0.43	4
30.00	250.00	-6.34	-2.80	2.64	-13.92	4	30.00	250.00	1.25	-2.9	-2.41	-0.3	4
30.00	260.00	-5.48	-3.78	2.79	-13.61	4	30.00	260.00	1.41	-1.99	-5.95	-1.78	4
30.00	270.00	-4.24	-5.35	2.65	-12.28	4	30.00	270.00	1.13	-0.78	-11.66	-4.18	4
30.00	280.00	-2.97	-7.92	2.36	-10.23	4	30.00	280.00	0.25	0.42	-30.36	-6.8	4
30.00	290.00	-1.91	-10.11	1.87	-7.60	4	30.00	290.00	-1.44	1.39	-14.12	-8.51	4
30.00	300.00	-1.22	-9.22	0.84	-5.40	4	30.00	300.00	-4.02	1.99	-7.81	-9.48	4
30.00	310.00	-0.86	-7.55	-0.83	-4.24	4	30.00	310.00	-7.6	2.4	-5.15	-9.41	4
30.00	320.00	-0.81	-6.87	-3.45	-3.85	4	30.00	320.00	-12.24	2.74	-4.02	-7.61	4
30.00	330.00	-0.97	-6.87	-7.01	-4.15	4	30.00	330.00	-17.41	2.93	-3.74	-5.26	4
30.00	340.00	-1.34	-6.92	-10.80	-5.16	4	30.00	340.00	-17.5	2.87	-4.01	-3.48	4

30.00	350.00	-2.17	-6.82	-12.86	-6.81	4	30.00	350.00	-14.89	2.5	-4.6	-2.33	4
45.00	0.00	-3.01	-5.19	-4.51	-5.23	4	45.00	0.00	-6.6	-0.06	-4.3	-1.13	4
45.00	10.00	-4.44	-4.47	-5.26	-3.53	4	45.00	10.00	-5.66	-1.66	-5.83	-0.38	4
45.00	20.00	-6.59	-4.05	-6.77	-2.15	4	45.00	20.00	-5.18	-3.9	-8.28	-0.12	4
45.00	30.00	-8.90	-3.67	-9.51	-1.06	4	45.00	30.00	-4.36	-7.57	-11.79	0.04	4
45.00	40.00	-9.25	-3.41	-15.33	-0.07	4	45.00	40.00	-3.07	-15.13	-13.26	0.38	4
45.00	50.00	-8.10	-3.58	-18.30	1.12	4	45.00	50.00	-1.73	-26.9	-11.62	0.54	4
45.00	60.00	-6.81	-4.12	-11.22	2.52	4	45.00	60.00	-0.67	-13.58	-10.7	-0.23	4
45.00	70.00	-5.73	-5.16	-8.64	3.49	4	45.00	70.00	0.22	-8.36	-11.53	-2.27	4
45.00	80.00	-5.80	-7.63	-8.82	3.66	4	45.00	80.00	0.87	-4.04	-14.07	-5.48	4
45.00	90.00	-7.62	-11.37	-10.15	2.92	4	45.00	90.00	0.93	-1.19	-21.98	-9.12	4
45.00	100.00	-10.42	-11.47	-15.12	1.78	4	45.00	100.00	0.21	0.6	-26.32	-10.83	4
45.00	110.00	-10.13	-10.44	-17.01	0.81	4	45.00	110.00	-1.42	1.83	-21.4	-11.39	4
45.00	120.00	-7.46	-11.94	-17.18	0.45	4	45.00	120.00	-4.22	2.63	-12.41	-13.38	4
45.00	130.00	-5.43	-15.51	-15.76	0.57	4	45.00	130.00	-8.06	2.83	-8.1	-11.06	4
45.00	140.00	-4.00	-13.06	-12.89	0.71	4	45.00	140.00	-12.22	2.5	-4.9	-6.33	4
45.00	150.00	-3.05	-8.20	-9.82	0.49	4	45.00	150.00	-10.48	1.76	-2.59	-3.67	4
45.00	160.00	-2.75	-4.96	-7.28	-0.17	4	45.00	160.00	-6.69	0.64	-1.07	-2.53	4
45.00	170.00	-3.20	-3.07	-5.31	-1.13	4	45.00	170.00	-3.74	-0.91	-0.34	-2.28	4
45.00	180.00	-4.86	-2.17	-3.53	-2.31	4	45.00	180.00	-1.34	-3.38	-0.07	-2.42	4
45.00	190.00	-7.99	-1.96	-2.03	-3.66	4	45.00	190.00	0.62	-7.55	0.05	-2.69	4
45.00	200.00	-13.82	-2.18	-0.88	-5.06	4	45.00	200.00	2.11	-16.77	0.37	-3.05	4
45.00	210.00	-23.02	-2.65	0.30	-6.33	4	45.00	210.00	3.02	-17.93	0.89	-3.39	4
45.00	220.00	-15.00	-3.06	1.50	-7.27	4	45.00	220.00	3.1	-8.79	1.34	-3.28	4
45.00	230.00	-10.98	-3.73	2.60	-8.36	4	45.00	230.00	2.44	-4.17	1.26	-2.9	4
45.00	240.00	-8.71	-4.77	3.39	-10.28	4	45.00	240.00	1.31	-1.49	0.47	-2.67	4
45.00	250.00	-6.59	-6.13	3.72	-13.65	4	45.00	250.00	0.05	-0.22	-1.1	-2.78	4
45.00	260.00	-4.77	-7.94	3.74	-16.82	4	45.00	260.00	-0.98	0.4	-3.54	-3.76	4
45.00	270.00	-3.08	-10.97	3.64	-19.16	4	45.00	270.00	-1.9	1.15	-8.07	-5.04	4
45.00	280.00	-1.96	-16.28	3.25	-15.98	4	45.00	280.00	-3.12	2.03	-21.66	-5.84	4
45.00	290.00	-1.40	-17.45	2.29	-11.12	4	45.00	290.00	-5.06	2.43	-12.23	-6.62	4
45.00	300.00	-1.50	-13.88	0.31	-8.57	4	45.00	300.00	-7.91	2.46	-6.04	-9.2	4
45.00	310.00	-2.05	-13.62	-2.68	-7.81	4	45.00	310.00	-11.94	2.49	-3.85	-12.64	4
45.00	320.00	-2.59	-15.57	-5.67	-8.12	4	45.00	320.00	-20.19	2.5	-3.13	-10.17	4
45.00	330.00	-2.74	-14.19	-6.85	-8.38	4	45.00	330.00	-23.54	2.37	-3.06	-6.79	4
45.00	340.00	-2.62	-10.57	-6.47	-8.36	4	45.00	340.00	-13.52	2.01	-3.22	-4.76	4
45.00	350.00	-2.60	-8.89	-6.03	-8.19	4	45.00	350.00	-10.63	1.68	-3.5	-4	4
60.00	0.00	-2.77	-3.72	-3.24	-13.85	4	60.00	0.00	-5.67	0.27	-7.66	-1.99	4
60.00	10.00	-2.83	-3.28	-3.66	-12.59	4	60.00	10.00	-4.44	-0.45	-7.13	-1.69	4
60.00	20.00	-3.23	-2.93	-4.68	-8.52	4	60.00	20.00	-2.69	-1.91	-6.32	-1.61	4
60.00	30.00	-4.03	-3.03	-7.55	-4.90	4	60.00	30.00	-1.6	-4.24	-5.85	-2.48	4
60.00	40.00	-4.66	-3.41	-15.93	-2.74	4	60.00	40.00	-1.21	-7.87	-5.77	-4.05	4
60.00	50.00	-4.11	-4.08	-17.19	-1.62	4	60.00	50.00	-1.27	-16.21	-6.81	-4.88	4
60.00	60.00	-2.83	-4.98	-8.65	-1.19	4	60.00	60.00	-1.17	-20.46	-10.28	-3.5	4
60.00	70.00	-1.58	-6.51	-6.45	-0.79	4	60.00	70.00	-0.26	-10.21	-16.99	-2.31	4
60.00	80.00	-1.57	-10.58	-6.12	0.04	4	60.00	80.00	0.86	-5.76	-15.49	-3.08	4
60.00	90.00	-3.57	-24.96	-6.00	1.14	4	60.00	90.00	1.18	-3.35	-14.43	-6.35	4
60.00	100.00	-7.03	-16.00	-5.17	1.62	4	60.00	100.00	0.02	-1.66	-18.42	-12.23	4
60.00	110.00	-9.66	-12.89	-4.05	1.01	4	60.00	110.00	-2.15	-0.31	-34.13	-15.58	4
60.00	120.00	-12.01	-13.41	-2.91	0.10	4	60.00	120.00	-4.62	0.69	-17.19	-9.5	4
60.00	130.00	-14.38	-17.54	-1.57	-0.02	4	60.00	130.00	-6.86	1.32	-11.59	-5.02	4
60.00	140.00	-13.64	-37.31	-3.50	0.10	4	60.00	140.00	-9.66	1.66	-9.01	-2.61	4
60.00	150.00	-11.72	-15.13	-3.50	0.09	4	60.00	150.00	-11.92	1.75	-5.72	-1.21	4
60.00	160.00	-11.28	-10.36	-2.89	-0.30	4	60.00	160.00	-10.4	1.48	-3.84	-0.45	4
60.00	170.00	-11.73	-8.15	-2.08	-1.01	4	60.00	170.00	-7.68	0.72	-2.94	-0.38	4
60.00	180.00	-13.20	-7.08	-1.33	-1.80	4	60.00	180.00	-4.96	-1	-2.5	-0.78	4

60.00	190.00	-15.95	-6.24	-0.55	-2.54	4	60.00	190.00	-2.79	-4.08	-2.17	-1.28	4
60.00	200.00	-17.87	-5.25	0.07	-2.65	4	60.00	200.00	-1.1	-8.92	-1.54	-2.27	4
60.00	210.00	-17.14	-4.60	0.80	-2.64	4	60.00	210.00	-0.5	-11.9	-1.11	-3.12	4
60.00	220.00	-17.03	-4.64	1.48	-2.70	4	60.00	220.00	-0.39	-7.88	-0.77	-4.35	4
60.00	230.00	-18.61	-5.50	2.12	-3.30	4	60.00	230.00	-0.17	-5.22	-0.39	-5.54	4
60.00	240.00	-20.46	-7.12	2.52	-4.85	4	60.00	240.00	0.48	-3.57	-0.45	-5.66	4
60.00	250.00	-17.03	-8.06	2.49	-7.74	4	60.00	250.00	0.95	-1.38	-0.93	-4.61	4
60.00	260.00	-12.05	-7.95	2.09	-11.02	4	60.00	260.00	0.57	0.95	-1.6	-3.88	4
60.00	270.00	-8.70	-7.94	1.56	-12.23	4	60.00	270.00	-0.61	2.05	-2.69	-5.09	4
60.00	280.00	-7.04	-8.59	1.27	-14.86	4	60.00	280.00	-2.37	2.31	-5.57	-8.07	4
60.00	290.00	-6.65	-10.60	0.31	-17.09	4	60.00	290.00	-4.05	2.61	-13.13	-12.2	4
60.00	300.00	-6.67	-13.92	-1.59	-18.45	4	60.00	300.00	-5.6	3.02	-23.25	-20.62	4
60.00	310.00	-6.63	-17.67	-4.42	-19.86	4	60.00	310.00	-7.4	3.25	-14.45	-20.72	4
60.00	320.00	-6.41	-24.08	-7.34	-19.34	4	60.00	320.00	-10.06	3.36	-13.33	-13.65	4
60.00	330.00	-5.50	-19.72	-9.03	-16.72	4	60.00	330.00	-15.39	3.35	-12.47	-10.08	4
60.00	340.00	-4.22	-11.82	-9.07	-15.86	4	60.00	340.00	-32.21	2.98	-10.32	-6.54	4
60.00	350.00	-3.36	-7.63	-7.67	-17.21	4	60.00	350.00	-16.28	2.22	-8.82	-3.9	4
75.00	0.00	-0.68	-5.58	-2.10	-16.74	4	75.00	0.00	-5.61	-2.23	-8.01	1.74	4
75.00	10.00	-0.52	-5.09	-3.46	-16.71	4	75.00	10.00	-1.77	-3.42	-8.52	2.02	4
75.00	20.00	-0.88	-4.58	-5.89	-25.42	4	75.00	20.00	0.09	-4.8	-8.72	1.36	4
75.00	30.00	-1.43	-4.42	-9.54	-14.22	4	75.00	30.00	1.04	-7.57	-8.98	-0.15	4
75.00	40.00	-2.15	-4.57	-16.56	-8.02	4	75.00	40.00	1.63	-14.01	-10.41	-2.22	4
75.00	50.00	-2.87	-5.24	-20.65	-5.47	4	75.00	50.00	2.21	-17.27	-15.82	-4.08	4
75.00	60.00	-3.38	-7.20	-13.61	-4.56	4	75.00	60.00	2.59	-9.17	-16.93	-4.21	4
75.00	70.00	-3.89	-11.89	-10.29	-3.90	4	75.00	70.00	2.37	-6.2	-10.93	-3.79	4
75.00	80.00	-3.59	-20.18	-8.4	-1.76	4	75.00	80.00	1.48	-4.74	-10.13	-5.32	4
75.00	90.00	-2.53	-25.98	-4.75	-0.02	4	75.00	90.00	0.42	-2.95	-11.88	-7.98	4
75.00	100.00	-2.43	-16.22	-2.13	-0.60	4	75.00	100.00	-0.61	-1.59	-8.3	-8.98	4
75.00	110.00	-4.02	-12.77	-2.54	-2.41	4	75.00	110.00	-2.02	-0.15	-14.85	-8.26	4
75.00	120.00	-6.94	-12.69	-3.23	-2.91	4	75.00	120.00	-4.47	1.01	-9.44	-5.71	4
75.00	130.00	-10.18	-12.27	-3.13	-1.86	4	75.00	130.00	-7.51	1.54	-5.85	-2.65	4
75.00	140.00	-12.50	-12.05	-2.23	-1.27	4	75.00	140.00	-10.27	1.53	-4.86	-0.36	4
75.00	150.00	-13.52	-14.09	-1.11	-1.56	4	75.00	150.00	-10.66	1.22	-4.79	0.71	4
75.00	160.00	-14.25	-19.23	-0.24	-2.24	4	75.00	160.00	-8.92	0.41	-4.73	0.88	4
75.00	170.00	-14.96	-15.75	0.06	-3.07	4	75.00	170.00	-7.14	-0.98	-4.33	0.58	4
75.00	180.00	-15.65	-10.37	0.04	-3.69	4	75.00	180.00	-6.03	-2.74	-3.59	0.16	4
75.00	190.00	-15.31	-8.34	-0.09	-4.24	4	75.00	190.00	-5.74	-4.68	-2.64	-0.28	4
75.00	200.00	-14.38	-8.34	-0.07	-4.56	4	75.00	200.00	-5.53	-6.94	-1.79	-0.81	4
75.00	210.00	-13.28	-9.68	0.42	-4.58	4	75.00	210.00	-4.58	-7.84	-1.43	-1.73	4
75.00	220.00	-13.51	-12.20	1.13	-4.24	4	75.00	220.00	-3.11	-5.5	-1.77	-2.68	4
75.00	230.00	-15.34	-15.64	1.71	-4.31	4	75.00	230.00	-2.11	-2.93	-2.71	-3.28	4
75.00	240.00	-15.53	-24.52	1.85	-5.73	4	75.00	240.00	-1.76	-1.86	-3.36	-3.07	4
75.00	250.00	-13.09	-20.87	1.81	-8.16	4	75.00	250.00	-1.72	-0.97	-2.6	-3.07	4
75.00	260.00	-11.99	-12.68	1.57	-9.31	4	75.00	260.00	-1.71	0.84	-2.06	-4.27	4
75.00	270.00	-12.19	-9.75	0.78	-11.09	4	75.00	270.00	-2.19	2.24	-3.57	-6.59	4
75.00	280.00	-11.36	-9.38	-0.78	-16.12	4	75.00	280.00	-2.87	2.74	-7.21	-11.46	4
75.00	290.00	-9.30	-10.29	-2.10	-21.33	4	75.00	290.00	-3.08	2.91	-10.56	-25.54	4
75.00	300.00	-8.74	-12.62	-3.20	-27.62	4	75.00	300.00	-2.64	2.98	-11.08	-10.73	4
75.00	310.00	-10.82	-17.35	-4.87	-20.55	4	75.00	310.00	-2.38	2.73	-10.11	-9.61	4
75.00	320.00	-13.49	-14.78	-6.37	-17.43	4	75.00	320.00	-3.31	2.27	-9.39	-14.28	4
75.00	330.00	-8.70	-9.78	-5.64	-13.86	4	75.00	330.00	-6.11	1.63	-8.87	-11.12	4
75.00	340.00	-4.93	-7.37	-4.36	-13.54	4	75.00	340.00	-11.39	0.82	-8.22	-4.36	4
75.00	350.00	-3.63	-6.52	-3.81	-14.52	4	75.00	350.00	-17.63	0.19	-8.18	-2.17	4
90.00	0.00	-4.27	-7.35	-3.23	-12.47	4	90.00	0.00	-10.34	-1.11	-6.24	-1.3	4
90.00	10.00	-3.77	-7.90	-3.70	-14.79	4	90.00	10.00	-6.69	-1.81	-6.56	-0.91	4
90.00	20.00	-3.24	-9.27	-4.66	-19.90	4	90.00	20.00	-2.22	-4	-7.9	-0.44	4

90.00	30.00	-3.51	-11.37	-6.74	-23.24	4	90.00	30.00	0.86	-8.38	-10.78	-0.08	4
90.00	40.00	-4.78	-13.62	-10.48	-14.91	4	90.00	40.00	2.53	-17.49	-15.1	0.12	4
90.00	50.00	-6.42	-15.08	-12.28	-9.68	4	90.00	50.00	3.22	-21.82	-14.84	-0.15	4
90.00	60.00	-6.82	-14.45	-8.33	-8.17	4	90.00	60.00	2.87	-12.78	-13.44	-1.36	4
90.00	70.00	-5.23	-13.01	-5.99	-9.06	4	90.00	70.00	1.51	-11.25	-15.65	-3.6	4
90.00	80.00	-2.9	-11.16	-5.26	-7.33	4	90.00	80.00	0.5	-9.94	-17.21	-5.92	4
90.00	90.00	-1.5	-9.83	-4.97	-3.71	4	90.00	90.00	0.72	-6.25	-14.35	-7.38	4
90.00	100.00	-0.98	-9.95	-4.66	-1.58	4	90.00	100.00	1.33	-3.62	-12.03	-10.01	4
90.00	110.00	-0.33	-10.71	-4.18	-0.90	4	90.00	110.00	0.85	-1.04	-11.13	-12.72	4
90.00	120.00	0.23	-11.33	-3.17	-1.12	4	90.00	120.00	-0.92	0.43	-14.97	-9.79	4
90.00	130.00	0.16	-11.09	-1.79	-1.45	4	90.00	130.00	-3.35	0.72	-13.36	-3.76	4
90.00	140.00	-0.92	-10.45	-2.02	-1.60	4	90.00	140.00	-5.96	0.78	-4.05	-0.11	4
90.00	150.00	-2.81	-10.13	-1.17	-2.20	4	90.00	150.00	-8.43	0.71	-1.13	1.63	4
90.00	160.00	-5.36	-10.13	-0.95	-2.99	4	90.00	160.00	-10.63	0.34	-0.06	2.48	4
90.00	170.00	-7.85	-10.42	-0.93	-3.30	4	90.00	170.00	-11.34	-0.1	-0.14	2.73	4
90.00	180.00	-10.85	-10.50	-0.85	-2.79	4	90.00	180.00	-10.63	-0.57	-1.02	2.51	4
90.00	190.00	-13.94	-9.82	-0.40	-2.02	4	90.00	190.00	-10.05	-1.36	-2.27	1.94	4
90.00	200.00	-15.72	-9.25	-0.18	-1.54	4	90.00	200.00	-11.05	-2.61	-2.66	1.14	4
90.00	210.00	-19.26	-8.43	0.06	-1.40	4	90.00	210.00	-12.8	-3.84	-1.86	0.48	4
90.00	220.00	-21.74	-7.77	0.14	-1.77	4	90.00	220.00	-11.7	-4.09	-0.61	-0.13	4
90.00	230.00	-21.39	-6.87	0.05	-2.74	4	90.00	230.00	-8.2	-3.35	-0.34	-0.26	4
90.00	240.00	-18.53	-6.10	-0.23	-4.96	4	90.00	240.00	-5.26	-2.47	-1.39	0.1	4
90.00	250.00	-16.17	-5.75	-0.54	-9.78	4	90.00	250.00	-4.58	-1.95	-2.21	0.09	4
90.00	260.00	-17.06	-5.79	-0.05	-14.92	4	90.00	260.00	-7.01	-1.84	-1.69	-1.52	4
90.00	270.00	-29.18	-5.57	0.52	-14.36	4	90.00	270.00	-11.64	-1.37	-2.75	-4.55	4
90.00	280.00	-17.48	-6.17	0.20	-16.41	4	90.00	280.00	-9.49	0	-6.15	-6.61	4
90.00	290.00	-11.47	-8.66	-0.37	-15.77	4	90.00	290.00	-5.51	1.32	-8.95	-14.06	4
90.00	300.00	-10.19	-11.91	-1.53	-17.34	4	90.00	300.00	-3.63	1.94	-6.71	-12.77	4
90.00	310.00	-11.48	-12.40	-4.64	-12.52	4	90.00	310.00	-2.92	2.31	-4.86	-6.48	4
90.00	320.00	-13.30	-10.24	-10.60	-8.88	4	90.00	320.00	-2.42	2.54	-5.18	-8.09	4
90.00	330.00	-12.04	-8.68	-14.24	-7.46	4	90.00	330.00	-2.73	2.54	-7.97	-22.35	4
90.00	340.00	-9.24	-8.15	-9.92	-7.09	4	90.00	340.00	-4.91	1.98	-11.96	-8.91	4
90.00	350.00	-7.29	-7.83	-6.74	-7.65	4	90.00	350.00	-9.98	1.09	-8.98	-4.12	4
105.00	0.00	-4.10	-20.48	-7.77	-8.61	4	105.00	0.00	-8.51	-3.35	-4.8	-4.67	4
105.00	10.00	-5.01	-19.56	-8.82	-10.29	4	105.00	10.00	-3.32	-5.85	-5.4	-3.42	4
105.00	20.00	-6.09	-15.57	-12.84	-12.15	4	105.00	20.00	-0.89	-8.41	-6.67	-2.23	4
105.00	30.00	-5.84	-12.47	-22.23	-13.15	4	105.00	30.00	0.61	-13.32	-7.85	-1.73	4
105.00	40.00	-4.29	-10.75	-10.31	-11.93	4	105.00	40.00	1.65	-18.35	-9.35	-2.54	4
105.00	50.00	-2.82	-9.49	-5.19	-9.62	4	105.00	50.00	2.07	-11.77	-13.21	-4.96	4
105.00	60.00	-2.12	-8.82	-3.07	-8.69	4	105.00	60.00	1.71	-10.25	-19.62	-8.88	4
105.00	70.00	-2.02	-8.70	-2.55	-8.05	4	105.00	70.00	0.71	-7.72	-12.81	-11.04	4
105.00	80.00	-1.87	-9.07	-2.39	-5.81	4	105.00	80.00	-0.83	-5.1	-10.72	-10.08	4
105.00	90.00	-1.54	-9.64	-1.52	-2.33	4	105.00	90.00	-2	-2.53	-16.41	-10.79	4
105.00	100.00	-1.1	-10.88	0.93	-1.02	4	105.00	100.00	-2.55	0.02	-9.16	-8.02	4
105.00	110.00	-0.59	-12.45	0.75	-2.01	4	105.00	110.00	-3.43	1.05	-9.14	-8.74	4
105.00	120.00	-0.67	-13.83	0.56	-3.57	4	105.00	120.00	-5.12	0.56	-7.03	-7.89	4
105.00	130.00	-1.59	-15.49	0.19	-3.53	4	105.00	130.00	-6.73	-0.82	-3.7	-3.87	4
105.00	140.00	-3.36	-17.09	-0.09	-2.74	4	105.00	140.00	-6.99	-2.86	-1.51	-0.64	4
105.00	150.00	-5.31	-16.58	-0.17	-1.96	4	105.00	150.00	-6.58	-4.43	-0.52	1.3	4
105.00	160.00	-6.66	-13.70	0.07	-1.27	4	105.00	160.00	-6.59	-4.22	-0.33	1.87	4
105.00	170.00	-7.54	-11.16	0.29	-0.56	4	105.00	170.00	-6.83	-3.58	-0.31	1.65	4
105.00	180.00	-9.09	-9.77	0.24	0.17	4	105.00	180.00	-7.28	-3.65	-0.31	0.85	4
105.00	190.00	-11.26	-8.76	-0.20	0.71	4	105.00	190.00	-7.24	-4.37	-0.92	-0.27	4
105.00	200.00	-14.77	-7.67	-0.72	1.03	4	105.00	200.00	-6.84	-5.69	-2.16	-1.44	4
105.00	210.00	-23.76	-6.18	-1.22	1.00	4	105.00	210.00	-6	-7.36	-3.05	-2.26	4
105.00	220.00	-21.20	-4.79	-1.58	0.19	4	105.00	220.00	-5.21	-8.01	-2.78	-2.31	4

105.00	230.00	-12.82	-3.86	-1.85	-1.83	4	105.00	230.00	-4.75	-7.4	-1.94	-1.68	4
105.00	240.00	-9.26	-3.67	-1.90	-5.71	4	105.00	240.00	-4.8	-6.88	-1.36	-1.36	4
105.00	250.00	-7.44	-4.44	-1.79	-9.85	4	105.00	250.00	-5.5	-6.49	-2.13	-2.56	4
105.00	260.00	-7.27	-6.14	-1.73	-10.17	4	105.00	260.00	-7.4	-5.37	-5.07	-4.7	4
105.00	270.00	-8.83	-8.37	-1.79	-10.42	4	105.00	270.00	-12.37	-3.57	-9.13	-5.05	4
105.00	280.00	-10.91	-9.77	-1.10	-10.28	4	105.00	280.00	-17.89	-1.33	-11.47	-7.11	4
105.00	290.00	-12.92	-9.91	-0.76	-11.13	4	105.00	290.00	-6.82	0.77	-11.17	-18.26	4
105.00	300.00	-14.05	-9.90	-2.44	-11.84	4	105.00	300.00	-3.05	1.91	-7.24	-11.88	4
105.00	310.00	-13.04	-10.33	-6.92	-8.98	4	105.00	310.00	-2.24	2.21	-8.21	-8.09	4
105.00	320.00	-10.65	-11.07	-13.55	-6.63	4	105.00	320.00	-2.99	2.35	-14.02	-9.7	4
105.00	330.00	-7.88	-12.71	-14.82	-6.13	4	105.00	330.00	-5.18	2.27	-12.48	-21.21	4
105.00	340.00	-5.93	-13.97	-13.52	-6.56	4	105.00	340.00	-9	1.67	-9.49	-13.7	4
105.00	350.00	-5.07	-14.47	-14.03	-6.85	4	105.00	350.00	-13.07	0.99	-8.67	-9.53	4
120.00	0.00	-5.14	-7.62	-7.84	-6.09	4	120.00	0.00	-14.74	-2.92	-4.29	-4.61	4
120.00	10.00	-4.95	-7.91	-7.60	-6.46	4	120.00	10.00	-11.24	-3.9	-4.36	-3.97	4
120.00	20.00	-4.56	-9.32	-8.24	-7.27	4	120.00	20.00	-5.79	-6.13	-4.2	-3.04	4
120.00	30.00	-4.83	-11.28	-9.16	-9.13	4	120.00	30.00	-1.63	-7.28	-3.82	-2.25	4
120.00	40.00	-6.40	-12.61	-8.82	-14.45	4	120.00	40.00	0.76	-7.24	-4.32	-2.05	4
120.00	50.00	-9.21	-11.59	-6.51	-21.72	4	120.00	50.00	2.02	-8.04	-7.1	-3.21	4
120.00	60.00	-10.31	-9.29	-4.37	-10.96	4	120.00	60.00	2.24	-9.57	-9.97	-5.99	4
120.00	70.00	-6.78	-7.54	-3.27	-6.77	4	120.00	70.00	1	-9.98	-7.81	-9.43	4
120.00	80.00	-3.36	-7.00	-3.17	-5.54	4	120.00	80.00	-1.62	-9.04	-5.89	-9.93	4
120.00	90.00	-1.35	-7.17	-2.98	-5.40	4	120.00	90.00	-4.04	-5.63	-5.95	-8.31	4
120.00	100.00	-0.65	-8.81	-2.16	-5.90	4	120.00	100.00	-4.03	-2.55	-7.7	-7.95	4
120.00	110.00	-0.85	-11.02	-1.24	-6.89	4	120.00	110.00	-2.74	-1.07	-11.94	-9.37	4
120.00	120.00	-1.75	-12.07	-0.54	-5.74	4	120.00	120.00	-2.58	-1.07	-17.09	-9.03	4
120.00	130.00	-3.12	-11.89	0.30	-4.12	4	120.00	130.00	-4.22	-2.01	-12.4	-7.99	4
120.00	140.00	-4.71	-11.46	-2.48	-3.36	4	120.00	140.00	-7.64	-3.08	-7.08	-5.27	4
120.00	150.00	-6.05	-10.42	-2.32	-3.08	4	120.00	150.00	-13.78	-3.35	-6.4	-3.22	4
120.00	160.00	-5.92	-9.29	-1.45	-3.39	4	120.00	160.00	-26.15	-2.93	-5.84	-2.34	4
120.00	170.00	-4.64	-8.18	-1.31	-4.12	4	120.00	170.00	-17.47	-2.37	-5.32	-1.74	4
120.00	180.00	-3.21	-7.42	-1.37	-4.05	4	120.00	180.00	-12.01	-2.01	-5.4	-1.22	4
120.00	190.00	-2.27	-7.21	-1.64	-2.85	4	120.00	190.00	-9.76	-2.36	-6.67	-1.21	4
120.00	200.00	-2.80	-8.30	-2.12	-1.28	4	120.00	200.00	-8.68	-3.77	-8.17	-1.65	4
120.00	210.00	-3.93	-9.50	-2.58	-0.51	4	120.00	210.00	-9.44	-6.09	-8.16	-2.18	4
120.00	220.00	-5.64	-10.75	-2.60	-0.32	4	120.00	220.00	-10.01	-8.92	-7.7	-2.7	4
120.00	230.00	-6.83	-9.88	-2.13	-0.85	4	120.00	230.00	-9.75	-10.94	-5.44	-3.1	4
120.00	240.00	-7.26	-7.71	-1.69	-2.13	4	120.00	240.00	-10.3	-11.16	-2.85	-3.23	4
120.00	250.00	-8.07	-5.46	-1.91	-3.55	4	120.00	250.00	-10.6	-10.57	-1.3	-3.69	4
120.00	260.00	-9.72	-3.54	-2.89	-3.99	4	120.00	260.00	-9.13	-10.78	-1.69	-5.08	4
120.00	270.00	-12.31	-2.62	-4.29	-3.94	4	120.00	270.00	-7.27	-8.76	-4.13	-5.44	4
120.00	280.00	-11.31	-3.21	-5.14	-4.12	4	120.00	280.00	-7.82	-4.99	-7.34	-4.98	4
120.00	290.00	-8.21	-5.49	-5.82	-4.20	4	120.00	290.00	-14.26	-1.85	-10.78	-8.13	4
120.00	300.00	-6.81	-9.06	-6.17	-3.90	4	120.00	300.00	-15.09	0.53	-11.43	-17.59	4
120.00	310.00	-6.95	-12.01	-6.69	-3.78	4	120.00	310.00	-5.6	1.98	-6.48	-13.43	4
120.00	320.00	-7.93	-15.19	-8.72	-3.96	4	120.00	320.00	-2.85	2.2	-5.46	-9.82	4
120.00	330.00	-8.66	-20.02	-13.03	-4.04	4	120.00	330.00	-3.02	1.21	-6.65	-8.25	4
120.00	340.00	-8.76	-15.89	-11.01	-4.05	4	120.00	340.00	-5.63	-0.42	-6.04	-9.09	4
120.00	350.00	-8.23	-9.93	-7.52	-4.46	4	120.00	350.00	-11.08	-1.42	-4.53	-9.49	4
135.00	0.00	-8.83	-8.09	-8.28	-6.02	4	135.00	0.00	-8.95	-3.95	0.2	0.05	4
135.00	10.00	-7.58	-5.73	-6.22	-9.56	4	135.00	10.00	-6.05	-4.38	-0.31	0.76	4
135.00	20.00	-7.29	-4.29	-5.68	-16.60	4	135.00	20.00	-4.86	-4.21	-1.91	0.97	4
135.00	30.00	-8.34	-3.50	-6.85	-23.20	4	135.00	30.00	-3.43	-3.99	-4.44	0.71	4
135.00	40.00	-11.41	-3.21	-9.51	-11.73	4	135.00	40.00	-1.3	-4.43	-7.7	-0.09	4
135.00	50.00	-18.86	-3.41	-13.64	-7.54	4	135.00	50.00	-0.15	-5.81	-9.24	-1.46	4
135.00	60.00	-23.79	-4.06	-16.99	-6.48	4	135.00	60.00	-0.47	-9.61	-7.18	-3.31	4

135.00	70.00	-13.13	-5.55	-14.88	-8.66	4	135.00	70.00	-1.99	-21.52	-5.34	-5.15	4
135.00	80.00	-8.62	-8.35	-9.60	-14.71	4	135.00	80.00	-3.53	-12.34	-5.27	-7.9	4
135.00	90.00	-5.34	-12.21	-2.59	-16.04	4	135.00	90.00	-4.94	-6.55	-14.77	-11.98	4
135.00	100.00	-3.07	-14.35	-3.04	-12.28	4	135.00	100.00	-5.94	-4.17	-12.03	-7.19	4
135.00	110.00	-1.92	-14.27	-3.11	-9.17	4	135.00	110.00	-7	-3.3	-9.78	-4.95	4
135.00	120.00	-1.73	-14.61	-3.55	-8.20	4	135.00	120.00	-10.51	-4.02	-8.81	-5.19	4
135.00	130.00	-1.92	-16.45	-4.25	-8.26	4	135.00	130.00	-20.74	-6.43	-7.8	-5.61	4
135.00	140.00	-1.67	-15.33	-4.75	-8.42	4	135.00	140.00	-17.67	-11.38	-6.99	-4.84	4
135.00	150.00	-0.87	-10.71	-4.99	-8.09	4	135.00	150.00	-10.9	-13.07	-6.63	-3.62	4
135.00	160.00	-0.03	-7.27	-4.74	-7.66	4	135.00	160.00	-8.95	-7.91	-6.78	-2.58	4
135.00	170.00	0.40	-5.28	-4.33	-6.77	4	135.00	170.00	-9.07	-5.37	-7.7	-1.9	4
135.00	180.00	0.37	-4.54	-3.98	-5.63	4	135.00	180.00	-9.93	-5.06	-9.31	-1.71	4
135.00	190.00	0.03	-4.67	-3.95	-5.01	4	135.00	190.00	-10.47	-6.74	-11.23	-1.88	4
135.00	200.00	-0.34	-5.73	-4.06	-4.91	4	135.00	200.00	-9.32	-10.65	-11.55	-2.35	4
135.00	210.00	-0.63	-7.33	-4.03	-5.16	4	135.00	210.00	-8.31	-17.12	-9.24	-2.85	4
135.00	220.00	-0.99	-8.45	-3.57	-5.67	4	135.00	220.00	-8.63	-31.38	-6.46	-3.03	4
135.00	230.00	-1.92	-7.67	-2.89	-5.47	4	135.00	230.00	-12.15	-28.01	-4.45	-3.33	4
135.00	240.00	-3.50	-6.16	-2.40	-4.23	4	135.00	240.00	-21.14	-22.07	-3.16	-4.41	4
135.00	250.00	-5.82	-4.88	-2.52	-2.97	4	135.00	250.00	-10.39	-19.76	-3.2	-6.73	4
135.00	260.00	-9.07	-4.11	-3.15	-2.40	4	135.00	260.00	-5.73	-15.26	-4.45	-8.72	4
135.00	270.00	-13.86	-4.03	-4.10	-2.58	4	135.00	270.00	-4.33	-9.11	-6.13	-8.16	4
135.00	280.00	-20.85	-5.22	-5.65	-2.97	4	135.00	280.00	-5.69	-4.71	-7.09	-9.71	4
135.00	290.00	-21.57	-8.24	-7.67	-2.57	4	135.00	290.00	-10.47	-1.86	-9.45	-15.07	4
135.00	300.00	-17.63	-13.85	-9.00	-1.58	4	135.00	300.00	-14.38	0.04	-12.78	-12.95	4
135.00	310.00	-16.10	-17.88	-8.12	-0.92	4	135.00	310.00	-9.01	1.17	-11.24	-8.53	4
135.00	320.00	-15.12	-17.72	-7.65	-1.04	4	135.00	320.00	-7.04	1.47	-8.76	-6.32	4
135.00	330.00	-12.91	-20.00	-9.71	-1.62	4	135.00	330.00	-7.9	0.99	-5.57	-4.49	4
135.00	340.00	-11.18	-22.38	-13.44	-2.32	4	135.00	340.00	-11.01	-0.09	-2.51	-3.05	4
135.00	350.00	-9.89	-19.72	-13.68	-2.88	4	135.00	350.00	-13.01	-0.81	-1.16	-2.23	4
150.00	0.00	-5.26	-10.73	-5.96	-9.66	4	150.00	0.00	0.52	-0.12	-2.67	-3.03	4
150.00	10.00	-4.59	-9.43	-5.07	-11.78	4	150.00	10.00	1.13	-0.32	-2.83	-2.68	4
150.00	20.00	-3.94	-7.36	-3.40	-19.14	4	150.00	20.00	1.9	-1.17	-3.64	-2.5	4
150.00	30.00	-3.88	-5.52	-2.12	-21.54	4	150.00	30.00	2.28	-2.53	-5.82	-3.22	4
150.00	40.00	-4.51	-4.17	-1.58	-13.65	4	150.00	40.00	1.93	-4.55	-9.57	-4.89	4
150.00	50.00	-5.64	-3.10	-1.61	-11.29	4	150.00	50.00	1.06	-7.44	-13.62	-6.99	4
150.00	60.00	-6.32	-2.58	-1.98	-12.19	4	150.00	60.00	-0.11	-12.38	-13.45	-8.32	4
150.00	70.00	-5.56	-2.48	-2.40	-17.21	4	150.00	70.00	-1.32	-20.41	-11.45	-7.88	4
150.00	80.00	-3.57	-3.00	-2.44	-16.07	4	150.00	80.00	-2.86	-16.86	-11.12	-7.07	4
150.00	90.00	-1.73	-3.97	-1.99	-8.45	4	150.00	90.00	-5.63	-11.88	-13.53	-7.45	4
150.00	100.00	-0.31	-5.15	-1.30	-4.98	4	150.00	100.00	-11.45	-9.5	-19.83	-9.67	4
150.00	110.00	0.25	-6.58	-0.98	-4.40	4	150.00	110.00	-18.94	-7.96	-13.35	-12.15	4
150.00	120.00	0.27	-8.09	-1.30	-6.62	4	150.00	120.00	-10.71	-7.4	-7.61	-8.22	4
150.00	130.00	-0.16	-9.51	-2.17	-10.43	4	150.00	130.00	-7.25	-7.43	-4.89	-4.9	4
150.00	140.00	-0.75	-10.74	-2.48	-11.91	4	150.00	140.00	-5.48	-7.79	-3.82	-3.59	4
150.00	150.00	-1.24	-11.94	-16.84	-9.58	4	150.00	150.00	-4.63	-7.67	-3.08	-3.23	4
150.00	160.00	-1.28	-13.59	-12.89	-7.39	4	150.00	160.00	-3.75	-6.92	-3.07	-3.35	4
150.00	170.00	-0.82	-15.47	-8.64	-6.31	4	150.00	170.00	-2.8	-5.88	-3.58	-3.35	4
150.00	180.00	-0.24	-17.71	-5.71	-6.73	4	150.00	180.00	-1.78	-5.24	-4.89	-2.97	4
150.00	190.00	0.27	-19.26	-3.90	-7.95	4	150.00	190.00	-1.02	-5.1	-7.2	-2.09	4
150.00	200.00	0.55	-23.21	-2.71	-9.30	4	150.00	200.00	-0.64	-5.15	-11.02	-1.32	4
150.00	210.00	0.56	-26.65	-2.07	-9.62	4	150.00	210.00	-0.87	-5.62	-17.54	-0.98	4
150.00	220.00	0.36	-26.68	-1.84	-8.04	4	150.00	220.00	-1.68	-6.12	-16.37	-0.74	4
150.00	230.00	-0.10	-18.05	-2.08	-5.62	4	150.00	230.00	-3.43	-6.92	-9.61	-1	4
150.00	240.00	-0.80	-12.78	-2.81	-3.41	4	150.00	240.00	-6.38	-7.95	-6.22	-1.98	4
150.00	250.00	-1.71	-9.52	-3.92	-1.84	4	150.00	250.00	-8.9	-9.44	-4.4	-4	4
150.00	260.00	-2.95	-7.56	-4.87	-1.12	4	150.00	260.00	-6.77	-11.58	-3.51	-7.04	4

150.00	270.00	-4.63	-6.27	-5.74	-1.26	4	150.00	270.00	-3.67	-13.46	-3.44	-10.1	4
150.00	280.00	-6.66	-5.56	-6.45	-2.19	4	150.00	280.00	-1.82	-13.44	-4	-11.19	4
150.00	290.00	-8.83	-5.40	-7.37	-3.79	4	150.00	290.00	-1.32	-10.22	-5.14	-12.77	4
150.00	300.00	-10.80	-5.96	-9.19	-5.18	4	150.00	300.00	-1.82	-6.82	-6.7	-17.55	4
150.00	310.00	-11.66	-7.28	-12.87	-5.44	4	150.00	310.00	-3.04	-4	-8.11	-18.02	4
150.00	320.00	-11.42	-9.53	-20.95	-4.83	4	150.00	320.00	-4.18	-1.86	-8.51	-12.12	4
150.00	330.00	-10.51	-13.64	-21.91	-4.36	4	150.00	330.00	-4.95	-0.23	-7.99	-8.97	4
150.00	340.00	-9.02	-23.25	-14.80	-4.54	4	150.00	340.00	-4.58	0.71	-6.43	-6.82	4
150.00	350.00	-7.55	-21.22	-11.19	-5.44	4	150.00	350.00	-2.99	1.11	-4.63	-5.18	4
165.00	0.00	-5.61	-7.31	-7.36	-8.87	4	165.00	0.00	-5.74	-6.23	-2.55	-0.03	4
165.00	10.00	-4.03	-6.10	-4.93	-13.37	4	165.00	10.00	-4.68	-7.39	-3.1	0.32	4
165.00	20.00	-2.45	-5.33	-3.27	-18.52	4	165.00	20.00	-4.1	-9.51	-4.26	0.23	4
165.00	30.00	-1.21	-4.82	-2.31	-14.86	4	165.00	30.00	-3.84	-13.89	-6.13	-0.45	4
165.00	40.00	-0.23	-4.72	-1.93	-10.76	4	165.00	40.00	-3.89	-22.76	-9.18	-1.82	4
165.00	50.00	0.54	-4.65	-2.07	-8.71	4	165.00	50.00	-4.4	-22.47	-14.43	-3.89	4
165.00	60.00	1.04	-4.51	-2.80	-8.21	4	165.00	60.00	-5.67	-15.08	-28.21	-6.9	4
165.00	70.00	1.33	-3.92	-4.20	-8.87	4	165.00	70.00	-8.06	-11.99	-19.58	-11.19	4
165.00	80.00	1.33	-3.21	-6.40	-11.17	4	165.00	80.00	-13.08	-10.2	-13.37	-17.28	4
165.00	90.00	1.00	-2.67	-11.56	-13.65	4	165.00	90.00	-27.59	-9.08	-10.52	-14.26	4
165.00	100.00	0.33	-2.44	-13.61	-16.03	4	165.00	100.00	-16.45	-8.15	-11.56	-9.99	4
165.00	110.00	-0.69	-2.53	-16.86	-18.64	4	165.00	110.00	-10.76	-7.36	-12.77	-7.86	4
165.00	120.00	-1.83	-2.94	-19.65	-20.64	4	165.00	120.00	-8.34	-6.45	-14.23	-6.64	4
165.00	130.00	-2.98	-3.62	-20.26	-21.56	4	165.00	130.00	-7.2	-5.71	-15.09	-6.34	4
165.00	140.00	-4.17	-4.60	-18.67	-21.17	4	165.00	140.00	-6.99	-4.8	-15.04	-6.27	4
165.00	150.00	-5.08	-5.93	-16.29	-20.71	4	165.00	150.00	-7.13	-4.39	-15.07	-6.39	4
165.00	160.00	-5.78	-7.81	-14.59	-19.97	4	165.00	160.00	-7.51	-4.23	-16.07	-6.64	4
165.00	170.00	-6.34	-10.68	-13.75	-17.73	4	165.00	170.00	-7.96	-4.49	-17.08	-7.21	4
165.00	180.00	-6.76	-15.34	-12.97	-15.90	4	165.00	180.00	-8.87	-5.16	-15.41	-7.83	4
165.00	190.00	-7.11	-21.13	-12.44	-14.59	4	165.00	190.00	-9.96	-6.29	-11.76	-8.43	4
165.00	200.00	-7.29	-16.98	-12.34	-12.73	4	165.00	200.00	-11.67	-7.88	-9.22	-9.75	4
165.00	210.00	-7.36	-12.41	-11.99	-11.87	4	165.00	210.00	-13.71	-10.23	-7.58	-10.6	4
165.00	220.00	-7.60	-10.32	-11.11	-10.90	4	165.00	220.00	-15.93	-12.68	-6.84	-11.76	4
165.00	230.00	-7.80	-9.46	-9.85	-9.72	4	165.00	230.00	-15.98	-14.66	-7.05	-14.11	4
165.00	240.00	-8.47	-9.60	-8.85	-8.30	4	165.00	240.00	-13.06	-15.55	-7.96	-19.72	4
165.00	250.00	-9.15	-10.49	-8.41	-7.23	4	165.00	250.00	-10.47	-15.59	-8.59	-22.28	4
165.00	260.00	-9.52	-12.23	-8.97	-6.45	4	165.00	260.00	-8.71	-15.8	-7.77	-18.1	4
165.00	270.00	-9.21	-14.73	-10.40	-5.88	4	165.00	270.00	-7.73	-17.35	-6.07	-15.18	4
165.00	280.00	-8.15	-17.87	-12.97	-5.22	4	165.00	280.00	-7.64	-21.38	-4.58	-13.76	4
165.00	290.00	-6.94	-19.99	-17.27	-4.49	4	165.00	290.00	-8.73	-33.42	-3.58	-12.2	4
165.00	300.00	-6.00	-19.10	-24.47	-3.76	4	165.00	300.00	-10.98	-23.4	-3.13	-10.26	4
165.00	310.00	-5.59	-17.12	-26.54	-3.21	4	165.00	310.00	-13.59	-16.16	-2.79	-7.64	4
165.00	320.00	-5.88	-15.20	-21.95	-3.12	4	165.00	320.00	-13.69	-12.16	-2.54	-5.44	4
165.00	330.00	-6.65	-13.27	-17.65	-3.54	4	165.00	330.00	-10.59	-9.75	-2.37	-3.58	4
165.00	340.00	-7.23	-11.60	-13.89	-4.42	4	165.00	340.00	-8.23	-8.26	-2.46	-2.35	4
165.00	350.00	-7.57	-10.68	-12.11	-5.13	4	165.00	350.00	-6.55	-8.1	-2.41	-1.82	4
180.00	0.00	-5.06	-16.45	-5.45	-13.22	4	180.00	0.00	1.42	-1.56	-3.16	-4.03	4
180.00	10.00	-5.14	-13.97	-4.66	-13.47	4	180.00	10.00	1.38	-1.58	-3.66	-4.1	4
180.00	20.00	-4.78	-9.93	-3.43	-12.77	4	180.00	20.00	1.24	-1.88	-4.53	-4.08	4
180.00	30.00	-3.73	-6.83	-2.40	-10.93	4	180.00	30.00	0.88	-2.57	-5.94	-4.31	4
180.00	40.00	-2.47	-4.81	-1.67	-8.74	4	180.00	40.00	0.37	-3.72	-8.1	-4.81	4
180.00	50.00	-1.27	-3.39	-1.19	-6.82	4	180.00	50.00	-0.31	-5.32	-11.97	-5.58	4
180.00	60.00	-0.34	-2.32	-0.92	-5.28	4	180.00	60.00	-1.18	-7.74	-20.15	-6.61	4
180.00	70.00	0.40	-1.72	-0.95	-3.93	4	180.00	70.00	-2.34	-11.28	-23.71	-8.02	4
180.00	80.00	0.88	-1.45	-1.31	-2.98	4	180.00	80.00	-3.73	-15.36	-13.74	-9.79	4
180.00	90.00	1.13	-1.56	-1.86	-2.28	4	180.00	90.00	-5.09	-14.79	-9.5	-12.01	4
180.00	100.00	1.21	-1.98	-2.60	-1.87	4	180.00	100.00	-5.68	-10.61	-7.03	-13.33	4

180.00	110.00	1.07	-2.57	-3.54	-1.86	4	180.00	110.00	-5.02	-7.6	-5.07	-11.64	4
180.00	120.00	0.77	-3.38	-4.83	-2.18	4	180.00	120.00	-3.63	-5.55	-3.69	-9.01	4
180.00	130.00	0.27	-4.62	-6.65	-2.71	4	180.00	130.00	-2.04	-4.1	-2.59	-7.03	4
180.00	140.00	-0.49	-6.19	-9.67	-3.50	4	180.00	140.00	-0.6	-3.2	-1.52	-5.61	4
180.00	150.00	-1.51	-8.41	-15.52	-4.66	4	180.00	150.00	0.5	-2.56	-2.85	-4.53	4
180.00	160.00	-2.73	-10.99	-11.82	-5.93	4	180.00	160.00	1.43	-2.1	-3.48	-3.79	4
180.00	170.00	-4.10	-13.21	-8.79	-7.22	4	180.00	170.00	2.14	-1.75	-4.29	-3.55	4
180.00	180.00	-5.21	-13.61	-6.53	-7.87	4	180.00	180.00	2.54	-1.61	-5.41	-3.73	4
180.00	190.00	-5.40	-11.06	-4.89	-8.50	4	180.00	190.00	2.74	-1.67	-6.84	-3.44	4
180.00	200.00	-4.41	-8.24	-4.01	-8.77	4	180.00	200.00	2.77	-1.68	-8.46	-3.35	4
180.00	210.00	-2.89	-5.76	-3.45	-8.08	4	180.00	210.00	2.52	-2.26	-11.3	-3.8	4
180.00	220.00	-1.41	-3.81	-3.07	-7.16	4	180.00	220.00	2.07	-3	-16.74	-4.3	4
180.00	230.00	-0.16	-2.42	-2.85	-6.05	4	180.00	230.00	1.41	-4.15	-32.03	-4.91	4
180.00	240.00	0.92	-1.41	-2.87	-5.02	4	180.00	240.00	0.45	-5.76	-16.32	-5.46	4
180.00	250.00	1.79	-0.78	-3.21	-4.19	4	180.00	250.00	-0.84	-8.03	-10.08	-5.97	4
180.00	260.00	2.36	-0.36	-4.10	-3.75	4	180.00	260.00	-2.33	-10.92	-6.61	-6.4	4
180.00	270.00	2.72	-0.27	-5.73	-3.70	4	180.00	270.00	-3.85	-13.54	-4.49	-6.65	4
180.00	280.00	2.82	-0.42	-7.80	-4.05	4	180.00	280.00	-4.9	-12.43	-3.24	-6.97	4
180.00	290.00	2.64	-0.81	-11.10	-4.52	4	180.00	290.00	-4.78	-9.49	-2.53	-7.2	4
180.00	300.00	2.24	-1.45	-16.57	-5.32	4	180.00	300.00	-3.78	-6.99	-2.18	-7.25	4
180.00	310.00	1.60	-2.40	-33.13	-6.26	4	180.00	310.00	-2.35	-4.99	-2.15	-7.13	4
180.00	320.00	0.76	-3.71	-18.44	-7.40	4	180.00	320.00	-1.1	-3.64	-2.35	-6.62	4
180.00	330.00	-0.35	-5.56	-12.57	-8.49	4	180.00	330.00	-0.16	-2.56	-2.63	-6.02	4
180.00	340.00	-1.64	-8.29	-9.36	-9.79	4	180.00	340.00	0.54	-1.88	-3	-5.49	4
180.00	350.00	-3.07	-12.76	-7.18	-10.93	4	180.00	350.00	0.92	-1.55	-3.29	-5.06	4

2462MHz

Theta Plorization							Phi Plorization						
Angle (θ)	Angle (ψ)	Max Gain(dBi)				N_{ANT}	Angle (θ)	Angle (ψ)	Max Gain(dBi)				N_{ANT}
		Ant 1(G1)	Ant 2(G2)	Ant 3(G3)	Ant 4(G4)				Ant 1(G1)	Ant 2(G2)	Ant 3(G3)	Ant 4(G4)	
0.00	0.00	-1.53	-2.53	-17.67	-7.17	4	0.00	0.00	-10.44	-1.66	-2.59	-3.24	4
0.00	10.00	-1.77	-1.99	-14.75	-8.57	4	0.00	10.00	-9.08	-2.37	-2.72	-3.03	4
0.00	20.00	-2.39	-0.99	-10.84	-11.82	4	0.00	20.00	-6.61	-4.05	-2.93	-2.73	4
0.00	30.00	-3.42	-0.10	-8.27	-17.85	4	0.00	30.00	-4.83	-6.25	-3.31	-2.67	4
0.00	40.00	-4.74	0.63	-6.51	-20.84	4	0.00	40.00	-3.47	-8.15	-4.15	-2.7	4
0.00	50.00	-6.60	0.97	-5.17	-14.37	4	0.00	50.00	-2.47	-8.61	-5.51	-2.87	4
0.00	60.00	-9.06	0.96	-4.38	-10.45	4	0.00	60.00	-1.63	-7.57	-8	-3.16	4
0.00	70.00	-12.81	0.55	-3.82	-7.78	4	0.00	70.00	-1.08	-5.77	-12.96	-3.58	4
0.00	80.00	-18.75	-0.16	-3.52	-5.86	4	0.00	80.00	-0.73	-4	-25.3	-4.08	4
0.00	90.00	-19.40	-1.20	-3.54	-4.31	4	0.00	90.00	-0.63	-2.4	-18.39	-4.82	4
0.00	100.00	-13.09	-2.55	-3.73	-3.03	4	0.00	100.00	-0.84	-1.03	-11.41	-5.83	4
0.00	110.00	-9.08	-4.19	-4.25	-2.08	4	0.00	110.00	-1.34	0.02	-8.22	-6.95	4
0.00	120.00	-6.45	-6.08	-5.05	-1.59	4	0.00	120.00	-2.16	0.7	-6.06	-7.78	4
0.00	130.00	-4.55	-7.77	-5.94	-1.45	4	0.00	130.00	-3.44	1.07	-4.57	-7.39	4
0.00	140.00	-3.23	-7.81	-7.57	-1.70	4	0.00	140.00	-5	1.17	-3.44	-6.72	4
0.00	150.00	-2.36	-6.55	-9.65	-2.05	4	0.00	150.00	-7.01	0.95	-2.33	-5.83	4
0.00	160.00	-1.78	-4.87	-13.47	-2.48	4	0.00	160.00	-8.87	0.5	-1.58	-5.04	4
0.00	170.00	-1.54	-3.61	-17.70	-3.07	4	0.00	170.00	-9.66	-0.14	-0.94	-4.09	4
0.00	180.00	-1.47	-2.47	-17.49	-3.83	4	0.00	180.00	-8.64	-1.12	-0.63	-3.36	4
0.00	190.00	-1.64	-1.49	-13.88	-4.94	4	0.00	190.00	-6.8	-2.57	-0.58	-2.84	4
0.00	200.00	-2.24	-0.61	-10.78	-7.00	4	0.00	200.00	-4.66	-4.33	-0.72	-2.28	4
0.00	210.00	-2.99	0.21	-7.91	-8.46	4	0.00	210.00	-3.25	-6.38	-1.3	-1.74	4
0.00	220.00	-4.17	0.77	-5.65	-8.75	4	0.00	220.00	-2.36	-7.34	-2.39	-1.18	4
0.00	230.00	-5.85	1.10	-4.00	-7.81	4	0.00	230.00	-1.79	-6.67	-4.09	-1	4
0.00	240.00	-8.12	1.11	-2.97	-6.36	4	0.00	240.00	-1.5	-5.02	-6.08	-1.16	4
0.00	250.00	-11.60	0.70	-2.35	-4.90	4	0.00	250.00	-1.33	-3.54	-8.55	-1.65	4
0.00	260.00	-15.76	-0.01	-2.12	-3.78	4	0.00	260.00	-1.39	-2.44	-11.66	-2.66	4
0.00	270.00	-15.35	-1.03	-2.16	-2.86	4	0.00	270.00	-1.66	-1.56	-12.7	-4.31	4
0.00	280.00	-11.18	-2.41	-2.46	-2.08	4	0.00	280.00	-2.12	-0.89	-9.89	-6.97	4
0.00	290.00	-7.97	-4.09	-2.99	-1.49	4	0.00	290.00	-2.95	-0.2	-7.04	-11.18	4
0.00	300.00	-5.93	-5.98	-4.01	-1.13	4	0.00	300.00	-4.02	0.41	-4.08	-18.06	4
0.00	310.00	-4.31	-7.72	-5.17	-1.01	4	0.00	310.00	-5.6	0.9	-2.69	-16.3	4
0.00	320.00	-3.22	-8.63	-6.88	-1.08	4	0.00	320.00	-7.62	1.25	-1.89	-10.65	4
0.00	330.00	-2.49	-8.08	-9.36	-1.40	4	0.00	330.00	-10.45	1.28	-1.49	-7.23	4
0.00	340.00	-1.87	-6.50	-12.80	-2.13	4	0.00	340.00	-13.68	1	-1.4	-5.16	4
0.00	350.00	-1.47	-4.93	-18.08	-3.34	4	0.00	350.00	-14.17	0.36	-1.48	-3.95	4
15.00	0.00	-4.81	-3.92	-16.34	-5.12	4	15.00	0.00	-8.65	-0.7	-5.46	-2.61	4
15.00	10.00	-5.25	-2.56	-13.97	-6.44	4	15.00	10.00	-6.16	-2.18	-6.64	-1.72	4
15.00	20.00	-5.58	-1.43	-11.62	-7.60	4	15.00	20.00	-4.42	-4.08	-7.32	-1.16	4
15.00	30.00	-6.03	-0.65	-9.88	-7.63	4	15.00	30.00	-2.99	-6.35	-7.64	-0.92	4
15.00	40.00	-6.85	-0.16	-8.63	-6.30	4	15.00	40.00	-1.74	-8.64	-8.31	-0.9	4
15.00	50.00	-8.12	-0.11	-7.87	-4.65	4	15.00	50.00	-0.72	-9.91	-9.89	-1.17	4
15.00	60.00	-10.45	-0.32	-7.08	-3.09	4	15.00	60.00	0.09	-8.41	-13.58	-1.77	4
15.00	70.00	-14.35	-0.88	-6.35	-1.73	4	15.00	70.00	0.65	-5.63	-23.65	-2.9	4
15.00	80.00	-21.12	-1.68	-6.02	-0.59	4	15.00	80.00	0.81	-2.92	-21.89	-4.57	4
15.00	90.00	-15.82	-2.91	-6.35	0.28	4	15.00	90.00	0.57	-0.93	-12.56	-6.78	4
15.00	100.00	-10.07	-4.74	-6.26	0.63	4	15.00	100.00	-0.09	0.49	-9.3	-8.54	4
15.00	110.00	-6.56	-7.32	-6.73	0.69	4	15.00	110.00	-1.18	1.31	-7.59	-9.48	4
15.00	120.00	-4.18	-11.10	-7.60	0.64	4	15.00	120.00	-2.7	1.72	-6.06	-9.32	4
15.00	130.00	-2.59	-13.44	-8.88	0.61	4	15.00	130.00	-4.93	1.76	-4.96	-8.53	4
15.00	140.00	-1.48	-10.34	-10.37	0.48	4	15.00	140.00	-8.12	1.49	-3.98	-7.32	4

15.00	150.00	-0.75	-6.82	-11.69	0.19	4	15.00	150.00	-12.27	0.86	-3.05	-5.87	4
15.00	160.00	-0.36	-4.36	-12.50	-0.25	4	15.00	160.00	-12.95	-0.01	-2.23	-4.24	4
15.00	170.00	-0.26	-2.74	-12.74	-0.90	4	15.00	170.00	-9.18	-1.15	-1.51	-2.96	4
15.00	180.00	-0.51	-1.63	-12.30	-1.87	4	15.00	180.00	-5.76	-2.71	-0.76	-2.05	4
15.00	190.00	-1.05	-0.91	-9.78	-3.14	4	15.00	190.00	-3.3	-4.6	-0.05	-1.46	4
15.00	200.00	-2.09	-0.39	-6.99	-4.50	4	15.00	200.00	-1.5	-7.32	0.43	-1.05	4
15.00	210.00	-3.70	0.10	-4.74	-5.69	4	15.00	210.00	-0.14	-10.4	0.5	-0.64	4
15.00	220.00	-5.94	0.44	-3.14	-6.47	4	15.00	220.00	0.84	-10.99	-0.12	-0.44	4
15.00	230.00	-9.18	0.63	-1.90	-6.63	4	15.00	230.00	1.51	-7.48	-1.51	-0.64	4
15.00	240.00	-13.48	0.57	-1.00	-6.50	4	15.00	240.00	1.94	-3.91	-3.51	-1.16	4
15.00	250.00	-13.37	0.16	-0.26	-6.00	4	15.00	250.00	2	-1.43	-6.83	-2.01	4
15.00	260.00	-9.33	-0.61	0.15	-5.39	4	15.00	260.00	1.7	0.33	-11.72	-3.08	4
15.00	270.00	-6.36	-1.73	0.23	-4.57	4	15.00	270.00	1.01	1.4	-19.3	-4.55	4
15.00	280.00	-4.45	-3.14	-0.03	-3.74	4	15.00	280.00	-0.07	2.08	-13.28	-6.5	4
15.00	290.00	-3.31	-4.89	-0.62	-3.11	4	15.00	290.00	-1.59	2.37	-8.64	-9.15	4
15.00	300.00	-2.72	-6.73	-2.14	-2.64	4	15.00	300.00	-3.67	2.48	-4.91	-13.15	4
15.00	310.00	-2.61	-8.38	-3.87	-2.42	4	15.00	310.00	-6.56	2.43	-3.69	-17.92	4
15.00	320.00	-2.82	-9.04	-6.33	-2.46	4	15.00	320.00	-10.73	2.28	-3.07	-14.23	4
15.00	330.00	-3.43	-8.52	-9.39	-2.82	4	15.00	330.00	-18.91	1.9	-3.04	-8.97	4
15.00	340.00	-3.96	-7.52	-13.17	-3.34	4	15.00	340.00	-25.65	1.46	-3.33	-6.16	4
15.00	350.00	-4.34	-6.93	-15.09	-3.82	4	15.00	350.00	-18.29	1.17	-3.61	-5.03	4
30.00	0.00	-6.14	-5.67	-10.83	-11.22	4	30.00	0.00	-12.45	1.43	-6.36	-1.73	4
30.00	10.00	-7.31	-4.82	-10.62	-12.31	4	30.00	10.00	-10.99	0.85	-6.73	-1.33	4
30.00	20.00	-9.97	-3.57	-10.15	-11.97	4	30.00	20.00	-8.99	-0.47	-7.67	-1	4
30.00	30.00	-11.66	-2.56	-9.49	-8.96	4	30.00	30.00	-7.38	-2.42	-9.41	-0.38	4
30.00	40.00	-10.42	-2.18	-9.67	-5.37	4	30.00	40.00	-5.82	-5.07	-12.88	0.27	4
30.00	50.00	-8.66	-2.33	-10.94	-2.15	4	30.00	50.00	-4.21	-8.74	-20.42	0.65	4
30.00	60.00	-8.06	-2.71	-13.28	0.40	4	30.00	60.00	-2.5	-10.98	-23.1	0.29	4
30.00	70.00	-8.94	-3.11	-14.15	2.16	4	30.00	70.00	-0.99	-8.61	-16.57	-1.01	4
30.00	80.00	-11.62	-3.22	-13.35	3.11	4	30.00	80.00	0.09	-5.87	-15.06	-3.46	4
30.00	90.00	-16.22	-3.55	-13.61	3.26	4	30.00	90.00	0.67	-3.44	-16.08	-6.68	4
30.00	100.00	-26.69	-4.95	-16.29	2.74	4	30.00	100.00	0.63	-1.57	-17.8	-10.13	4
30.00	110.00	-19.50	-7.70	-21.06	1.92	4	30.00	110.00	0.05	-0.15	-18.64	-12.74	4
30.00	120.00	-11.43	-11.87	-14.73	1.35	4	30.00	120.00	-1.21	0.79	-20.9	-14.99	4
30.00	130.00	-7.35	-17.28	-11.69	1.18	4	30.00	130.00	-3.18	1.44	-21.61	-19.53	4
30.00	140.00	-4.91	-18.37	-17.13	1.22	4	30.00	140.00	-5.92	1.7	-14.07	-15.29	4
30.00	150.00	-3.31	-12.68	-16.91	1.14	4	30.00	150.00	-9.53	1.47	-9.1	-8.2	4
30.00	160.00	-2.39	-8.35	-16.31	0.72	4	30.00	160.00	-11.74	0.64	-5.29	-4.48	4
30.00	170.00	-1.84	-5.44	-15.47	-0.11	4	30.00	170.00	-9.88	-0.77	-2.64	-2.56	4
30.00	180.00	-1.87	-3.29	-14.03	-1.33	4	30.00	180.00	-6.9	-3.01	-0.29	-1.62	4
30.00	190.00	-2.39	-1.83	-10.76	-2.90	4	30.00	190.00	-4.53	-6.43	1.53	-1.41	4
30.00	200.00	-3.34	-0.86	-7.02	-4.70	4	30.00	200.00	-3	-11.45	2.62	-1.25	4
30.00	210.00	-4.72	-0.49	-4.10	-6.65	4	30.00	210.00	-1.8	-15.51	3.27	-0.92	4
30.00	220.00	-5.92	-0.67	-1.60	-8.82	4	30.00	220.00	-0.9	-9.89	3.03	-0.31	4
30.00	230.00	-6.69	-1.23	0.33	-11.10	4	30.00	230.00	-0.27	-6.34	2.07	0.16	4
30.00	240.00	-7.00	-1.89	1.74	-13.28	4	30.00	240.00	0.34	-4.51	0.51	0.32	4
30.00	250.00	-7.11	-2.51	2.56	-14.65	4	30.00	250.00	0.91	-3.48	-1.96	-0.15	4
30.00	260.00	-6.51	-3.23	2.79	-13.98	4	30.00	260.00	1.23	-2.4	-5.23	-1.38	4
30.00	270.00	-5.24	-4.61	2.61	-12.33	4	30.00	270.00	1.15	-0.83	-10.06	-3.52	4
30.00	280.00	-3.91	-6.66	2.27	-10.09	4	30.00	280.00	0.4	0.63	-21.8	-5.83	4
30.00	290.00	-2.70	-7.86	1.74	-7.71	4	30.00	290.00	-1.02	1.71	-16.82	-7.4	4
30.00	300.00	-1.87	-7.30	0.84	-5.66	4	30.00	300.00	-3.26	2.41	-9.1	-8.29	4
30.00	310.00	-1.35	-6.61	-0.66	-4.51	4	30.00	310.00	-6.38	2.89	-5.81	-8.39	4
30.00	320.00	-1.11	-6.65	-3.02	-4.17	4	30.00	320.00	-10.24	3.25	-4.33	-7.27	4
30.00	330.00	-1.15	-7.27	-6.34	-4.66	4	30.00	330.00	-14.93	3.45	-3.94	-5.52	4
30.00	340.00	-1.43	-8.02	-10.16	-5.91	4	30.00	340.00	-17.18	3.36	-4.28	-3.93	4

30.00	350.00	-2.31	-8.11	-12.71	-7.98	4	30.00	350.00	-16.16	2.99	-5.05	-2.61	4
45.00	0.00	-3.13	-4.98	-5.21	-5.17	4	45.00	0.00	-6.16	0	-3.53	-0.69	4
45.00	10.00	-4.72	-4.02	-5.95	-3.66	4	45.00	10.00	-5.35	-1.41	-5.26	-0.07	4
45.00	20.00	-7.30	-3.71	-7.68	-2.43	4	45.00	20.00	-4.96	-3.25	-8.12	0.19	4
45.00	30.00	-9.93	-3.72	-10.78	-1.50	4	45.00	30.00	-4.17	-6.4	-13.29	0.41	4
45.00	40.00	-9.95	-3.74	-16.58	-0.53	4	45.00	40.00	-2.93	-12.78	-18.31	0.87	4
45.00	50.00	-8.54	-4.07	-15.79	0.82	4	45.00	50.00	-1.71	-31.87	-14.61	0.94	4
45.00	60.00	-7.60	-4.35	-10.31	2.34	4	45.00	60.00	-0.67	-13.18	-12.94	-0.01	4
45.00	70.00	-6.74	-4.85	-8.51	3.34	4	45.00	70.00	0.07	-8.2	-13.59	-2.22	4
45.00	80.00	-6.83	-6.62	-9.09	3.41	4	45.00	80.00	0.7	-4.21	-16.64	-5.39	4
45.00	90.00	-8.90	-10.20	-10.43	2.58	4	45.00	90.00	0.85	-1.39	-30.14	-8.39	4
45.00	100.00	-12.03	-11.76	-15.31	1.54	4	45.00	100.00	0.31	0.39	-26.43	-9.28	4
45.00	110.00	-10.52	-10.88	-15.91	0.78	4	45.00	110.00	-1.02	1.68	-20.25	-10.03	4
45.00	120.00	-7.56	-11.35	-16.04	0.55	4	45.00	120.00	-3.44	2.59	-12.47	-11.53	4
45.00	130.00	-5.46	-13.39	-14.97	0.90	4	45.00	130.00	-6.92	2.91	-8.15	-8.84	4
45.00	140.00	-4.15	-13.23	-12.81	1.17	4	45.00	140.00	-10.55	2.61	-4.86	-4.74	4
45.00	150.00	-3.31	-9.27	-10.01	0.92	4	45.00	150.00	-10.13	1.81	-2.51	-2.46	4
45.00	160.00	-3.05	-5.90	-7.57	0.14	4	45.00	160.00	-7.01	0.61	-0.96	-1.59	4
45.00	170.00	-3.53	-3.80	-5.48	-0.93	4	45.00	170.00	-4.24	-0.97	-0.2	-1.66	4
45.00	180.00	-5.17	-2.69	-3.78	-2.29	4	45.00	180.00	-1.76	-3.34	0	-2.23	4
45.00	190.00	-8.57	-2.28	-2.25	-3.62	4	45.00	190.00	0.29	-7.03	0	-3.01	4
45.00	200.00	-14.68	-2.28	-0.89	-4.95	4	45.00	200.00	1.99	-13.99	0.15	-3.49	4
45.00	210.00	-18.78	-2.38	0.37	-6.10	4	45.00	210.00	2.98	-25.54	0.64	-3.7	4
45.00	220.00	-12.82	-2.61	1.59	-6.89	4	45.00	220.00	3.15	-10.7	1.17	-3.47	4
45.00	230.00	-9.79	-3.10	2.72	-7.80	4	45.00	230.00	2.48	-4.78	1.24	-2.93	4
45.00	240.00	-8.32	-4.06	3.46	-9.75	4	45.00	240.00	1.22	-1.66	0.61	-2.55	4
45.00	250.00	-6.77	-5.54	3.70	-13.14	4	45.00	250.00	-0.07	-0.26	-0.81	-2.85	4
45.00	260.00	-5.23	-7.31	3.72	-17.58	4	45.00	260.00	-1.05	0.44	-3.14	-4.19	4
45.00	270.00	-3.70	-10.16	3.69	-20.63	4	45.00	270.00	-1.9	1.31	-7.52	-5.91	4
45.00	280.00	-2.56	-15.11	3.47	-16.43	4	45.00	280.00	-3.17	2.2	-20.67	-6.64	4
45.00	290.00	-2.00	-15.34	2.60	-10.99	4	45.00	290.00	-5.17	2.56	-12.12	-7.25	4
45.00	300.00	-2.03	-12.96	0.66	-8.27	4	45.00	300.00	-8.21	2.52	-5.79	-9.9	4
45.00	310.00	-2.39	-13.26	-2.32	-7.30	4	45.00	310.00	-12.93	2.54	-3.55	-13.27	4
45.00	320.00	-2.71	-15.78	-5.47	-7.41	4	45.00	320.00	-22.94	2.57	-2.76	-10.26	4
45.00	330.00	-2.68	-14.71	-6.87	-7.89	4	45.00	330.00	-20.5	2.41	-2.49	-6.44	4
45.00	340.00	-2.59	-10.82	-6.71	-8.12	4	45.00	340.00	-12.7	2.02	-2.43	-4.33	4
45.00	350.00	-2.53	-8.98	-6.67	-8.06	4	45.00	350.00	-10	1.64	-2.54	-3.49	4
60.00	0.00	-2.85	-3.70	-2.96	-13.22	4	60.00	0.00	-5.31	0.22	-7.64	-1.52	4
60.00	10.00	-2.95	-3.23	-3.22	-12.11	4	60.00	10.00	-4.14	-0.44	-7.09	-1.22	4
60.00	20.00	-3.36	-2.72	-4.41	-8.31	4	60.00	20.00	-2.65	-1.83	-6.53	-1.14	4
60.00	30.00	-4.21	-2.70	-7.80	-4.83	4	60.00	30.00	-1.72	-3.8	-6.48	-1.99	4
60.00	40.00	-4.78	-3.01	-17.17	-2.72	4	60.00	40.00	-1.51	-6.79	-6.55	-3.58	4
60.00	50.00	-4.19	-3.64	-15.19	-1.71	4	60.00	50.00	-1.55	-13.7	-7.52	-4.29	4
60.00	60.00	-2.93	-4.54	-7.59	-1.35	4	60.00	60.00	-1.42	-26.9	-10.99	-2.74	4
60.00	70.00	-1.77	-5.85	-5.69	-1.00	4	60.00	70.00	-0.48	-11.05	-17.11	-1.52	4
60.00	80.00	-1.89	-9.20	-5.91	-0.13	4	60.00	80.00	0.69	-5.81	-14.26	-2.36	4
60.00	90.00	-4.11	-18.66	-6.21	1.03	4	60.00	90.00	1.09	-3.08	-13.08	-5.76	4
60.00	100.00	-8.25	-20.28	-5.54	1.51	4	60.00	100.00	0.09	-1.34	-16.54	-11.18	4
60.00	110.00	-11.87	-14.50	-4.29	0.93	4	60.00	110.00	-1.82	0.04	-32.16	-12.56	4
60.00	120.00	-15.72	-14.52	-2.97	0.07	4	60.00	120.00	-3.79	1.04	-19.15	-7.27	4
60.00	130.00	-16.55	-18.14	-1.46	0.00	4	60.00	130.00	-5.72	1.51	-12.94	-3.58	4
60.00	140.00	-12.46	-29.03	-3.37	0.18	4	60.00	140.00	-8.22	1.71	-9.88	-1.74	4
60.00	150.00	-10.70	-15.28	-3.41	0.20	4	60.00	150.00	-10.26	1.66	-6.1	-0.63	4
60.00	160.00	-10.30	-10.26	-2.80	-0.29	4	60.00	160.00	-9.45	1.36	-3.84	-0.17	4
60.00	170.00	-10.91	-8.16	-2.13	-1.05	4	60.00	170.00	-7.28	0.7	-2.87	-0.27	4
60.00	180.00	-12.51	-7.34	-1.41	-2.07	4	60.00	180.00	-4.65	-0.86	-2.68	-0.57	4

60.00	190.00	-15.88	-6.80	-0.64	-3.15	4	60.00	190.00	-2.33	-3.91	-2.63	-1.07	4
60.00	200.00	-18.96	-6.02	0.03	-3.63	4	60.00	200.00	-0.62	-8.82	-2.05	-1.97	4
60.00	210.00	-20.63	-5.51	0.74	-3.61	4	60.00	210.00	0.02	-13.94	-1.57	-2.6	4
60.00	220.00	-20.82	-5.49	1.44	-3.33	4	60.00	220.00	0.08	-8.74	-1.37	-3.69	4
60.00	230.00	-23.02	-6.23	2.16	-3.31	4	60.00	230.00	0.18	-5.41	-1.22	-4.87	4
60.00	240.00	-22.42	-7.11	2.60	-4.31	4	60.00	240.00	0.76	-3.43	-1.07	-5.45	4
60.00	250.00	-15.52	-7.27	2.66	-6.70	4	60.00	250.00	1.08	-0.91	-1.24	-4.59	4
60.00	260.00	-10.88	-7.03	2.29	-10.30	4	60.00	260.00	0.64	1.32	-1.44	-3.78	4
60.00	270.00	-8.03	-7.46	1.71	-12.44	4	60.00	270.00	-0.73	2.17	-2.25	-4.87	4
60.00	280.00	-6.87	-8.73	1.27	-15.09	4	60.00	280.00	-2.47	2.22	-5.09	-7.96	4
60.00	290.00	-6.79	-11.63	0.51	-17.07	4	60.00	290.00	-4.26	2.57	-12.31	-12.29	4
60.00	300.00	-7.20	-15.69	-1.33	-16.68	4	60.00	300.00	-6.02	2.99	-24.8	-21.23	4
60.00	310.00	-7.36	-18.95	-3.88	-16.99	4	60.00	310.00	-8.2	3.21	-13.69	-22.24	4
60.00	320.00	-7.02	-26.40	-6.46	-15.88	4	60.00	320.00	-11.58	3.41	-12.45	-13.62	4
60.00	330.00	-6.00	-19.99	-8.10	-14.51	4	60.00	330.00	-18.36	3.4	-12.61	-9.3	4
60.00	340.00	-4.59	-11.78	-8.03	-14.70	4	60.00	340.00	-30.18	3.02	-10.76	-5.75	4
60.00	350.00	-3.68	-7.49	-6.58	-16.46	4	60.00	350.00	-13.96	2.28	-8.91	-3.3	4
75.00	0.00	-0.73	-5.83	-2.58	-16.67	4	75.00	0.00	-4.6	-2.32	-7.79	2.15	4
75.00	10.00	-0.71	-5.03	-3.89	-17.30	4	75.00	10.00	-1.25	-3.61	-8.61	2.25	4
75.00	20.00	-1.10	-4.46	-6.37	-35.93	4	75.00	20.00	0.4	-4.86	-8.55	1.42	4
75.00	30.00	-1.71	-4.28	-10.71	-13.71	4	75.00	30.00	1.2	-7.27	-8.14	-0.17	4
75.00	40.00	-2.33	-4.44	-19.78	-7.70	4	75.00	40.00	1.64	-12.83	-9.29	-2.3	4
75.00	50.00	-2.98	-5.03	-18.63	-5.41	4	75.00	50.00	2.14	-17.18	-14.75	-3.94	4
75.00	60.00	-3.24	-6.76	-12.19	-4.78	4	75.00	60.00	2.42	-9.2	-18.55	-3.66	4
75.00	70.00	-3.62	-10.82	-9.37	-4.02	4	75.00	70.00	2.07	-6	-10.86	-3.25	4
75.00	80.00	-3.61	-17.55	-7.32	-1.56	4	75.00	80.00	1	-4.57	-10.11	-4.93	4
75.00	90.00	-2.99	-25.42	-3.93	0.09	4	75.00	90.00	-0.2	-2.85	-12.63	-7.26	4
75.00	100.00	-3.16	-17.76	-1.91	-0.72	4	75.00	100.00	-1.08	-1.55	-8.92	-7.78	4
75.00	110.00	-5.17	-14.50	-2.48	-2.58	4	75.00	110.00	-2.12	-0.29	-13.41	-6.9	4
75.00	120.00	-8.6	-15.21	-3.07	-2.65	4	75.00	120.00	-3.93	0.88	-9.17	-4.58	4
75.00	130.00	-12.22	-15.09	-2.94	-1.51	4	75.00	130.00	-6.56	1.39	-6.36	-1.93	4
75.00	140.00	-13.90	-14.41	-2.02	-1.03	4	75.00	140.00	-9.14	1.47	-5.61	-0.03	4
75.00	150.00	-14.44	-16.27	-0.92	-1.46	4	75.00	150.00	-9.66	1.15	-5.59	0.67	4
75.00	160.00	-15.10	-20.54	-0.21	-2.43	4	75.00	160.00	-7.99	0.3	-5.66	0.54	4
75.00	170.00	-16.02	-15.13	0.07	-3.41	4	75.00	170.00	-6.25	-1.2	-5.25	0.12	4
75.00	180.00	-17.04	-10.46	0.08	-4.20	4	75.00	180.00	-5.12	-3.2	-4.51	-0.24	4
75.00	190.00	-17.01	-8.77	-0.02	-4.81	4	75.00	190.00	-4.73	-5.54	-3.46	-0.39	4
75.00	200.00	-15.76	-8.78	0.10	-5.01	4	75.00	200.00	-4.45	-8.34	-2.55	-0.68	4
75.00	210.00	-14.34	-10.09	0.56	-5.09	4	75.00	210.00	-3.5	-9.62	-1.98	-1.44	4
75.00	220.00	-14.28	-12.17	1.25	-4.68	4	75.00	220.00	-2.11	-6.65	-2.05	-2.49	4
75.00	230.00	-15.74	-15.67	1.84	-4.77	4	75.00	230.00	-1.21	-3.73	-2.84	-3.29	4
75.00	240.00	-15.29	-23.12	2.01	-6.28	4	75.00	240.00	-1.01	-2.42	-3.68	-3.31	4
75.00	250.00	-12.94	-20.06	1.91	-8.31	4	75.00	250.00	-1.07	-1.04	-3.12	-3.1	4
75.00	260.00	-12.11	-12.74	1.62	-8.81	4	75.00	260.00	-1.34	1.07	-2.51	-4.12	4
75.00	270.00	-12.21	-10.01	0.80	-10.15	4	75.00	270.00	-1.88	2.42	-3.79	-6.41	4
75.00	280.00	-11.24	-9.59	-0.78	-14.19	4	75.00	280.00	-2.64	2.75	-7.49	-11.44	4
75.00	290.00	-9.36	-10.13	-2.30	-17.93	4	75.00	290.00	-2.92	2.88	-11.46	-22.22	4
75.00	300.00	-8.93	-12.27	-3.27	-25.38	4	75.00	300.00	-2.64	2.9	-12.43	-10.64	4
75.00	310.00	-11.27	-16.70	-4.60	-25.73	4	75.00	310.00	-2.61	2.73	-11.72	-9.86	4
75.00	320.00	-13.41	-14.42	-6.00	-19.08	4	75.00	320.00	-3.79	2.36	-11.16	-15.02	4
75.00	330.00	-8.37	-9.75	-5.81	-14.87	4	75.00	330.00	-7.1	1.76	-9.8	-10.27	4
75.00	340.00	-4.77	-7.47	-4.80	-14.66	4	75.00	340.00	-13.54	0.85	-8.32	-3.8	4
75.00	350.00	-3.50	-6.63	-4.44	-15.88	4	75.00	350.00	-21.98	0.21	-7.59	-1.63	4
90.00	0.00	-4.41	-7.50	-3.25	-13.26	4	90.00	0.00	-9.87	-1.57	-7.61	-1.32	4
90.00	10.00	-3.93	-8.12	-3.47	-15.43	4	90.00	10.00	-6.37	-2.18	-7.82	-0.93	4
90.00	20.00	-3.36	-9.43	-4.67	-19.00	4	90.00	20.00	-2.07	-4.08	-9.18	-0.38	4

90.00	30.00	-3.66	-11.47	-6.67	-22.13	4	90.00	30.00	0.95	-7.74	-11.69	-0.02	4
90.00	40.00	-4.95	-13.83	-10.12	-15.26	4	90.00	40.00	2.47	-14.51	-16.85	0.15	4
90.00	50.00	-6.43	-15.05	-11.27	-9.97	4	90.00	50.00	3.14	-22.9	-16.6	-0.19	4
90.00	60.00	-6.69	-14.03	-7.79	-8.44	4	90.00	60.00	2.87	-12.51	-13.65	-1.5	4
90.00	70.00	-5.35	-12.47	-5.57	-9.18	4	90.00	70.00	1.86	-10.22	-15.04	-3.93	4
90.00	80.00	-3.24	-10.57	-4.79	-6.73	4	90.00	80.00	1.11	-9.23	-16.94	-6.17	4
90.00	90.00	-1.86	-9.32	-4.6	-3.25	4	90.00	90.00	1.33	-6.51	-13.31	-7.57	4
90.00	100.00	-1.36	-9.43	-4.44	-1.46	4	90.00	100.00	1.85	-4.14	-11.36	-10.04	4
90.00	110.00	-0.67	-10.56	-4.05	-1.00	4	90.00	110.00	1.4	-1.38	-11.4	-12.25	4
90.00	120.00	0.06	-11.45	-3.20	-1.20	4	90.00	120.00	-0.21	0.21	-17.63	-8.42	4
90.00	130.00	0.09	-11.64	-1.99	-1.30	4	90.00	130.00	-2.55	0.56	-13.67	-2.97	4
90.00	140.00	-0.77	-10.82	-2.73	-1.27	4	90.00	140.00	-5.06	0.75	-3.3	0	4
90.00	150.00	-2.43	-10.23	-1.69	-1.79	4	90.00	150.00	-7.83	0.86	-0.53	1.35	4
90.00	160.00	-4.69	-9.89	-1.19	-2.44	4	90.00	160.00	-10.69	0.61	0.4	2.08	4
90.00	170.00	-6.97	-10.16	-1.06	-2.72	4	90.00	170.00	-11.79	0.26	0.14	2.31	4
90.00	180.00	-9.54	-10.16	-0.94	-2.38	4	90.00	180.00	-10.59	-0.25	-0.98	2.19	4
90.00	190.00	-11.95	-9.45	-0.49	-1.82	4	90.00	190.00	-9.31	-1.11	-2.45	1.74	4
90.00	200.00	-13.67	-8.98	-0.22	-1.46	4	90.00	200.00	-10.01	-2.46	-2.83	0.94	4
90.00	210.00	-16.89	-8.16	0.10	-1.35	4	90.00	210.00	-11.98	-3.77	-1.9	0.16	4
90.00	220.00	-19.72	-7.52	0.25	-1.54	4	90.00	220.00	-12.21	-3.92	-0.43	-0.54	4
90.00	230.00	-20.61	-6.73	0.35	-2.19	4	90.00	230.00	-8.89	-3.09	0.02	-0.79	4
90.00	240.00	-19.05	-6.05	0.26	-4.20	4	90.00	240.00	-5.65	-2.24	-1.06	-0.39	4
90.00	250.00	-17.76	-5.91	-0.01	-8.88	4	90.00	250.00	-4.77	-1.66	-2.37	-0.15	4
90.00	260.00	-20.35	-6.12	0.24	-16.19	4	90.00	260.00	-7.02	-1.47	-2.16	-1.49	4
90.00	270.00	-35.83	-6.16	0.47	-15.67	4	90.00	270.00	-11.16	-0.92	-2.87	-3.99	4
90.00	280.00	-15.45	-6.98	-0.12	-17.94	4	90.00	280.00	-8.94	0.45	-5.69	-5.59	4
90.00	290.00	-10.35	-9.68	-0.75	-17.19	4	90.00	290.00	-5.16	1.59	-8.64	-11.98	4
90.00	300.00	-9.38	-12.83	-1.73	-19.76	4	90.00	300.00	-3.34	2.18	-6.85	-13.08	4
90.00	310.00	-10.68	-12.53	-4.54	-12.50	4	90.00	310.00	-2.53	2.55	-5.19	-6.54	4
90.00	320.00	-12.79	-10.04	-9.76	-8.82	4	90.00	320.00	-1.99	2.81	-5.73	-8.17	4
90.00	330.00	-12.65	-8.26	-13.38	-7.71	4	90.00	330.00	-2.38	2.7	-8.55	-22.24	4
90.00	340.00	-9.90	-7.78	-9.62	-7.54	4	90.00	340.00	-4.59	1.98	-12.09	-8.99	4
90.00	350.00	-7.81	-7.76	-6.70	-8.24	4	90.00	350.00	-10.08	0.9	-9.46	-4.33	4
105.00	0.00	-3.77	-25.76	-7.13	-8.51	4	105.00	0.00	-8.74	-2.77	-4.82	-5.25	4
105.00	10.00	-4.60	-23.07	-8.33	-10.01	4	105.00	10.00	-3.35	-4.9	-5.7	-3.59	4
105.00	20.00	-5.74	-17.52	-12.66	-11.65	4	105.00	20.00	-0.85	-7.21	-7.35	-1.97	4
105.00	30.00	-5.68	-13.21	-19.08	-13.18	4	105.00	30.00	0.72	-11.71	-8.65	-1.43	4
105.00	40.00	-4.33	-11.05	-9.16	-12.73	4	105.00	40.00	1.86	-19.03	-9.98	-2.31	4
105.00	50.00	-3.15	-9.56	-4.39	-10.62	4	105.00	50.00	2.33	-11.9	-12.82	-4.97	4
105.00	60.00	-2.52	-8.69	-2.57	-9.37	4	105.00	60.00	1.94	-10.53	-15.63	-9.07	4
105.00	70.00	-2.43	-8.39	-2.35	-8.19	4	105.00	70.00	0.93	-8.05	-12.22	-10.6	4
105.00	80.00	-2.19	-8.54	-2.49	-5.73	4	105.00	80.00	-0.44	-5.14	-10.9	-9.24	4
105.00	90.00	-1.62	-8.71	-1.90	-2.47	4	105.00	90.00	-1.43	-2.35	-17.37	-10.23	4
105.00	100.00	-1.08	-9.73	0.46	-1.42	4	105.00	100.00	-1.78	0.31	-8.84	-7.74	4
105.00	110.00	-0.53	-11.42	0.18	-2.56	4	105.00	110.00	-2.53	1.35	-9.21	-7.77	4
105.00	120.00	-0.45	-13.17	0.01	-3.63	4	105.00	120.00	-3.8	0.89	-6.88	-6.4	4
105.00	130.00	-1.23	-15.23	-0.30	-3.11	4	105.00	130.00	-5.03	-0.41	-3.45	-3.14	4
105.00	140.00	-2.72	-17.84	-0.48	-2.21	4	105.00	140.00	-5.64	-2.35	-1.15	-0.33	4
105.00	150.00	-4.50	-17.20	-0.44	-1.43	4	105.00	150.00	-6.18	-3.94	-0.11	1.28	4
105.00	160.00	-5.98	-13.43	-0.21	-0.82	4	105.00	160.00	-6.74	-3.83	0.1	1.7	4
105.00	170.00	-7.26	-10.69	0.09	-0.22	4	105.00	170.00	-7.19	-3.25	0.11	1.36	4
105.00	180.00	-9.39	-9.14	0.13	0.37	4	105.00	180.00	-8.08	-3.38	0.02	0.58	4
105.00	190.00	-12.47	-8.23	-0.19	0.82	4	105.00	190.00	-8.31	-4.08	-0.57	-0.45	4
105.00	200.00	-17.41	-7.20	-0.64	1.09	4	105.00	200.00	-7.67	-5.45	-1.72	-1.79	4
105.00	210.00	-24.35	-5.87	-1.07	1.11	4	105.00	210.00	-6.45	-6.88	-2.81	-2.92	4
105.00	220.00	-16.87	-4.67	-1.50	0.53	4	105.00	220.00	-5.29	-7.53	-2.61	-3.12	4

105.00	230.00	-11.96	-3.94	-1.67	-1.22	4	105.00	230.00	-4.68	-6.74	-1.8	-2.26	4
105.00	240.00	-9.15	-3.84	-1.44	-4.90	4	105.00	240.00	-4.61	-6.16	-0.92	-1.62	4
105.00	250.00	-7.52	-4.50	-1.22	-9.96	4	105.00	250.00	-5.28	-5.82	-1.27	-2.49	4
105.00	260.00	-7.27	-6.33	-1.20	-11.00	4	105.00	260.00	-7.34	-4.59	-4	-4.34	4
105.00	270.00	-8.61	-8.43	-1.54	-10.99	4	105.00	270.00	-12.57	-2.91	-8.48	-4.46	4
105.00	280.00	-11.23	-9.44	-1.22	-10.77	4	105.00	280.00	-16.11	-0.74	-11.66	-6.2	4
105.00	290.00	-13.86	-9.29	-0.65	-11.69	4	105.00	290.00	-5.98	1.24	-11.17	-16.86	4
105.00	300.00	-15.00	-9.06	-2.17	-12.31	4	105.00	300.00	-2.32	2.22	-7.39	-13.06	4
105.00	310.00	-13.36	-9.10	-6.41	-8.96	4	105.00	310.00	-1.5	2.5	-8.65	-8.42	4
105.00	320.00	-10.58	-9.55	-12.89	-6.88	4	105.00	320.00	-2.22	2.68	-15.13	-9.55	4
105.00	330.00	-7.60	-11.56	-13.92	-6.52	4	105.00	330.00	-4.3	2.63	-12.03	-19.99	4
105.00	340.00	-5.66	-14.82	-13.16	-6.81	4	105.00	340.00	-7.9	2.01	-9.34	-15	4
105.00	350.00	-4.80	-16.80	-13.46	-7.10	4	105.00	350.00	-11.82	1.28	-8.47	-10.55	4
120.00	0.00	-4.77	-7.79	-8.22	-6.59	4	120.00	0.00	-13.2	-2.97	-4.42	-4.59	4
120.00	10.00	-4.58	-8.04	-8.11	-6.81	4	120.00	10.00	-9.92	-4.19	-4.27	-3.91	4
120.00	20.00	-4.15	-9.57	-8.53	-7.44	4	120.00	20.00	-4.85	-7.24	-3.92	-2.84	4
120.00	30.00	-4.43	-11.66	-9.26	-9.25	4	120.00	30.00	-0.92	-8.39	-3.16	-1.83	4
120.00	40.00	-5.88	-13.21	-8.47	-14.51	4	120.00	40.00	1.28	-7.32	-3.48	-1.6	4
120.00	50.00	-8.62	-11.79	-6.34	-23.74	4	120.00	50.00	2.37	-7.59	-5.8	-2.76	4
120.00	60.00	-9.35	-9.08	-4.32	-11.08	4	120.00	60.00	2.4	-9.15	-8.77	-5.72	4
120.00	70.00	-6.12	-6.97	-3.47	-7.13	4	120.00	70.00	1.12	-9.87	-7.72	-9.53	4
120.00	80.00	-2.81	-6.03	-3.39	-5.72	4	120.00	80.00	-1.42	-8.95	-5.83	-10.3	4
120.00	90.00	-0.85	-5.98	-3.22	-5.54	4	120.00	90.00	-3.57	-5.46	-5.62	-8.42	4
120.00	100.00	-0.19	-7.21	-2.43	-5.97	4	120.00	100.00	-3.51	-2.28	-7.1	-7.8	4
120.00	110.00	-0.38	-9.30	-1.55	-7.40	4	120.00	110.00	-2.4	-0.77	-10.56	-9.09	4
120.00	120.00	-1.25	-10.63	-0.83	-6.43	4	120.00	120.00	-2.43	-0.68	-14.59	-8.78	4
120.00	130.00	-2.59	-10.77	0.15	-4.59	4	120.00	130.00	-4.39	-1.55	-11.08	-7.05	4
120.00	140.00	-4.10	-10.83	-2.26	-3.61	4	120.00	140.00	-8.5	-2.74	-5.95	-4.09	4
120.00	150.00	-5.39	-10.13	-2.01	-3.32	4	120.00	150.00	-16.25	-3.18	-5.6	-2.35	4
120.00	160.00	-5.66	-9.25	-1.25	-3.81	4	120.00	160.00	-23.2	-2.88	-5.33	-1.71	4
120.00	170.00	-4.73	-8.30	-1.13	-4.52	4	120.00	170.00	-13.74	-2.46	-5	-1.34	4
120.00	180.00	-3.58	-7.59	-1.29	-4.57	4	120.00	180.00	-9.92	-2.17	-5.07	-1	4
120.00	190.00	-2.74	-7.53	-1.53	-3.30	4	120.00	190.00	-8.42	-2.5	-5.95	-1.12	4
120.00	200.00	-3.43	-8.95	-2.01	-1.62	4	120.00	200.00	-8.06	-3.98	-7.06	-1.74	4
120.00	210.00	-4.67	-10.31	-2.62	-0.80	4	120.00	210.00	-9.11	-6.07	-7.23	-2.23	4
120.00	220.00	-6.62	-11.27	-2.71	-0.40	4	120.00	220.00	-9.84	-8.5	-7.21	-2.78	4
120.00	230.00	-7.79	-9.90	-2.20	-0.71	4	120.00	230.00	-9.8	-10.08	-5.1	-3.15	4
120.00	240.00	-8.38	-7.42	-1.68	-1.84	4	120.00	240.00	-10.42	-10.27	-2.61	-3.45	4
120.00	250.00	-9.30	-4.98	-1.71	-3.29	4	120.00	250.00	-10.92	-9.84	-1.07	-4.03	4
120.00	260.00	-10.94	-3.17	-2.45	-4.10	4	120.00	260.00	-9.37	-10.1	-1.44	-5.18	4
120.00	270.00	-12.41	-2.34	-3.70	-4.26	4	120.00	270.00	-7.42	-8.32	-3.38	-5.1	4
120.00	280.00	-10.77	-2.98	-4.85	-4.25	4	120.00	280.00	-8.11	-4.75	-5.72	-4.56	4
120.00	290.00	-8.36	-5.31	-5.97	-4.21	4	120.00	290.00	-15.65	-1.73	-8.79	-7.48	4
120.00	300.00	-7.40	-8.75	-6.65	-3.88	4	120.00	300.00	-12.42	0.76	-9.69	-16.18	4
120.00	310.00	-7.66	-12.13	-6.93	-3.72	4	120.00	310.00	-4.13	2.24	-5.64	-14.26	4
120.00	320.00	-8.44	-15.60	-8.44	-4.09	4	120.00	320.00	-1.7	2.36	-5.34	-10.14	4
120.00	330.00	-8.76	-18.47	-11.83	-4.55	4	120.00	330.00	-2.09	1.29	-7.13	-8.29	4
120.00	340.00	-8.60	-14.56	-10.57	-4.71	4	120.00	340.00	-5.01	-0.28	-6.29	-9.02	4
120.00	350.00	-7.91	-9.72	-7.27	-5.16	4	120.00	350.00	-11.41	-1.23	-4.62	-9.26	4
135.00	0.00	-9.29	-7.72	-9.03	-6.31	4	135.00	0.00	-9.02	-4.33	0.25	0.04	4
135.00	10.00	-8.34	-5.50	-6.81	-9.91	4	135.00	10.00	-5.96	-4.8	-0.17	0.83	4
135.00	20.00	-8.23	-4.16	-6.38	-17.21	4	135.00	20.00	-4.55	-4.42	-1.49	1.08	4
135.00	30.00	-9.49	-3.34	-7.63	-23.22	4	135.00	30.00	-2.68	-4	-3.63	0.79	4
135.00	40.00	-13.07	-3.02	-10.61	-11.67	4	135.00	40.00	-0.62	-4.19	-6.45	0.02	4
135.00	50.00	-23.66	-3.00	-15.44	-7.48	4	135.00	50.00	0.47	-5.25	-8.14	-1.37	4
135.00	60.00	-19.04	-3.38	-19.72	-6.64	4	135.00	60.00	0.02	-8.92	-6.9	-3.13	4

135.00	70.00	-11.31	-4.51	-16.10	-8.98	4	135.00	70.00	-1.64	-18.96	-5.55	-4.98	4
135.00	80.00	-7.34	-6.68	-10.18	-16.57	4	135.00	80.00	-3.41	-11.59	-5.72	-7.43	4
135.00	90.00	-4.39	-10.03	-2.72	-18.71	4	135.00	90.00	-4.85	-5.91	-15.32	-11.75	4
135.00	100.00	-2.37	-12.42	-3.18	-14.03	4	135.00	100.00	-6.04	-3.51	-10.51	-7	4
135.00	110.00	-1.29	-13.10	-3.28	-10.37	4	135.00	110.00	-7.16	-2.6	-8.72	-4.42	4
135.00	120.00	-1.24	-13.50	-3.78	-9.17	4	135.00	120.00	-10.63	-3.37	-8.05	-4.54	4
135.00	130.00	-1.44	-14.11	-4.26	-8.95	4	135.00	130.00	-18.66	-5.89	-7.49	-4.84	4
135.00	140.00	-1.34	-12.75	-4.47	-8.81	4	135.00	140.00	-14.37	-11	-6.85	-4.04	4
135.00	150.00	-0.68	-9.55	-4.36	-8.52	4	135.00	150.00	-9.17	-12.82	-6.44	-2.85	4
135.00	160.00	-0.01	-6.90	-4.10	-7.91	4	135.00	160.00	-7.32	-7.69	-6.59	-1.85	4
135.00	170.00	0.31	-5.26	-3.83	-6.92	4	135.00	170.00	-7.21	-5.22	-7.34	-1.32	4
135.00	180.00	0.16	-4.82	-3.55	-5.81	4	135.00	180.00	-7.94	-4.84	-8.69	-1.23	4
135.00	190.00	-0.14	-5.14	-3.61	-4.91	4	135.00	190.00	-8.45	-6.36	-10.43	-1.53	4
135.00	200.00	-0.49	-6.25	-3.93	-4.72	4	135.00	200.00	-7.86	-9.8	-10.72	-2.05	4
135.00	210.00	-0.78	-7.69	-4.10	-5.01	4	135.00	210.00	-7.34	-14.92	-8.85	-2.56	4
135.00	220.00	-1.29	-8.24	-3.71	-5.57	4	135.00	220.00	-8	-23.74	-6.21	-2.76	4
135.00	230.00	-2.38	-7.04	-3.04	-5.82	4	135.00	230.00	-11.61	-27.79	-4.03	-3.05	4
135.00	240.00	-4.23	-5.62	-2.44	-4.74	4	135.00	240.00	-22.36	-22.07	-2.64	-3.94	4
135.00	250.00	-7.00	-4.60	-2.31	-3.44	4	135.00	250.00	-10.38	-19.42	-2.47	-6.12	4
135.00	260.00	-10.41	-3.91	-2.67	-2.82	4	135.00	260.00	-5.5	-14.45	-3.42	-8.08	4
135.00	270.00	-15.57	-3.78	-3.78	-2.82	4	135.00	270.00	-4.13	-8.58	-4.89	-7.96	4
135.00	280.00	-21.95	-4.96	-5.39	-3.04	4	135.00	280.00	-5.67	-4.37	-6.17	-9.32	4
135.00	290.00	-20.76	-7.81	-7.59	-2.60	4	135.00	290.00	-11.11	-1.58	-8.7	-14.9	4
135.00	300.00	-17.22	-13.20	-8.79	-1.47	4	135.00	300.00	-14.38	0.27	-11.68	-13.46	4
135.00	310.00	-15.88	-20.06	-7.69	-0.91	4	135.00	310.00	-8.43	1.3	-10.46	-8.77	4
135.00	320.00	-14.87	-23.39	-7.16	-1.17	4	135.00	320.00	-6.66	1.58	-8.46	-6.37	4
135.00	330.00	-13.06	-28.59	-9.50	-1.97	4	135.00	330.00	-7.84	1.05	-5.48	-4.42	4
135.00	340.00	-11.13	-25.14	-13.79	-2.71	4	135.00	340.00	-11.87	-0.03	-2.51	-3.02	4
135.00	350.00	-9.89	-19.28	-14.93	-3.15	4	135.00	350.00	-15.14	-0.75	-1.18	-2.2	4
150.00	0.00	-5.14	-11.47	-6.09	-9.98	4	150.00	0.00	0.82	0.17	-2.57	-3.06	4
150.00	10.00	-4.59	-10.18	-5.18	-12.21	4	150.00	10.00	1.45	0.03	-2.74	-2.69	4
150.00	20.00	-3.97	-8.07	-3.51	-20.15	4	150.00	20.00	2.32	-0.76	-3.46	-2.46	4
150.00	30.00	-3.93	-5.93	-2.24	-21.42	4	150.00	30.00	2.65	-2.14	-5.48	-3.2	4
150.00	40.00	-4.55	-4.35	-1.64	-13.44	4	150.00	40.00	2.29	-4.1	-8.91	-4.92	4
150.00	50.00	-5.57	-3.24	-1.65	-11.33	4	150.00	50.00	1.47	-6.95	-12.9	-7.13	4
150.00	60.00	-6.00	-2.53	-2.13	-12.56	4	150.00	60.00	0.3	-11.53	-13.84	-8.5	4
150.00	70.00	-4.94	-2.29	-2.74	-18.43	4	150.00	70.00	-0.95	-19.05	-11.81	-7.83	4
150.00	80.00	-2.91	-2.61	-3.00	-15.22	4	150.00	80.00	-2.54	-16.25	-11.21	-7	4
150.00	90.00	-1.01	-3.42	-2.61	-7.73	4	150.00	90.00	-5.33	-11.15	-13.23	-7.31	4
150.00	100.00	0.33	-4.52	-1.88	-4.30	4	150.00	100.00	-11.63	-8.5	-19.14	-9.45	4
150.00	110.00	0.92	-6.09	-1.42	-3.58	4	150.00	110.00	-21.61	-6.99	-13.29	-12.3	4
150.00	120.00	0.93	-7.76	-1.62	-5.73	4	150.00	120.00	-10.37	-6.3	-7.57	-8.5	4
150.00	130.00	0.54	-9.44	-2.29	-9.44	4	150.00	130.00	-6.65	-6.46	-4.84	-4.89	4
150.00	140.00	-0.12	-10.36	-2.22	-11.02	4	150.00	140.00	-4.96	-6.85	-3.75	-3.44	4
150.00	150.00	-0.69	-11.21	-15.60	-9.08	4	150.00	150.00	-3.98	-6.95	-3.17	-3.02	4
150.00	160.00	-0.92	-12.16	-11.59	-6.93	4	150.00	160.00	-3.14	-6.34	-3.23	-3.12	4
150.00	170.00	-0.68	-13.40	-8.02	-5.70	4	150.00	170.00	-2.29	-5.19	-3.8	-3.24	4
150.00	180.00	-0.34	-14.87	-5.45	-6.00	4	150.00	180.00	-1.38	-4.5	-5.08	-2.92	4
150.00	190.00	0.07	-16.29	-3.77	-7.41	4	150.00	190.00	-0.65	-4.46	-7.51	-2.05	4
150.00	200.00	0.25	-20.79	-2.73	-9.09	4	150.00	200.00	-0.34	-4.41	-12.22	-1.09	4
150.00	210.00	0.19	-29.54	-2.15	-10.27	4	150.00	210.00	-0.51	-5.01	-21.36	-0.56	4
150.00	220.00	-0.10	-26.70	-2.03	-8.83	4	150.00	220.00	-1.36	-5.6	-16.83	-0.34	4
150.00	230.00	-0.66	-16.72	-2.29	-6.25	4	150.00	230.00	-3.2	-6.54	-9.29	-0.46	4
150.00	240.00	-1.39	-11.67	-3.12	-3.89	4	150.00	240.00	-6.13	-7.75	-5.91	-1.29	4
150.00	250.00	-2.41	-8.61	-4.14	-2.18	4	150.00	250.00	-8.67	-9.36	-4.12	-3.09	4
150.00	260.00	-3.75	-6.65	-5.27	-1.37	4	150.00	260.00	-6.55	-11.21	-3.23	-6.32	4

150.00	270.00	-5.53	-5.56	-6.31	-1.41	4	150.00	270.00	-3.45	-12.19	-2.98	-10.1	4
150.00	280.00	-7.71	-5.06	-7.11	-2.25	4	150.00	280.00	-1.79	-11.11	-3.34	-11.78	4
150.00	290.00	-10.28	-5.07	-7.84	-3.67	4	150.00	290.00	-1.44	-8.51	-4.26	-13.51	4
150.00	300.00	-12.16	-5.69	-9.34	-5.04	4	150.00	300.00	-2.18	-5.68	-5.78	-17.76	4
150.00	310.00	-12.55	-7.13	-12.39	-5.48	4	150.00	310.00	-3.51	-3.3	-7.14	-17.46	4
150.00	320.00	-11.73	-9.36	-19.24	-5.18	4	150.00	320.00	-4.77	-1.44	-7.98	-12	4
150.00	330.00	-10.48	-12.86	-22.31	-4.78	4	150.00	330.00	-5.49	0.09	-7.58	-9.16	4
150.00	340.00	-8.86	-17.87	-15.26	-4.86	4	150.00	340.00	-4.85	0.99	-6.24	-7.04	4
150.00	350.00	-7.46	-19.56	-11.70	-5.65	4	150.00	350.00	-2.97	1.33	-4.39	-5.27	4
165.00	0.00	-6.04	-7.41	-7.49	-8.77	4	165.00	0.00	-6.38	-5.74	-2.77	0.12	4
165.00	10.00	-4.64	-6.04	-5.19	-13.00	4	165.00	10.00	-5.23	-6.66	-3.26	0.37	4
165.00	20.00	-3.11	-5.12	-3.72	-17.58	4	165.00	20.00	-4.46	-8.68	-4.34	0.18	4
165.00	30.00	-1.83	-4.60	-2.77	-14.21	4	165.00	30.00	-4.1	-12.43	-6.29	-0.57	4
165.00	40.00	-0.80	-4.45	-2.39	-10.52	4	165.00	40.00	-3.99	-20.61	-9.55	-1.93	4
165.00	50.00	0.07	-4.48	-2.52	-8.67	4	165.00	50.00	-4.44	-24.7	-15.43	-3.8	4
165.00	60.00	0.66	-4.56	-3.33	-8.20	4	165.00	60.00	-5.56	-15.12	-41.05	-6.43	4
165.00	70.00	1.01	-4.19	-4.79	-9.05	4	165.00	70.00	-7.86	-11.5	-17.86	-10.28	4
165.00	80.00	1.14	-3.69	-6.97	-11.40	4	165.00	80.00	-12.47	-9.58	-12.98	-15.72	4
165.00	90.00	0.92	-3.15	-12.46	-14.46	4	165.00	90.00	-22.91	-8.57	-10.81	-13.08	4
165.00	100.00	0.29	-2.77	-14.13	-17.35	4	165.00	100.00	-16.39	-7.66	-12.43	-9.29	4
165.00	110.00	-0.74	-2.82	-16.83	-20.07	4	165.00	110.00	-10.84	-7	-14.68	-7.46	4
165.00	120.00	-1.92	-3.05	-18.75	-21.78	4	165.00	120.00	-8.53	-6.2	-17.41	-6.62	4
165.00	130.00	-3.01	-3.62	-19.44	-24.01	4	165.00	130.00	-7.4	-5.38	-18.24	-6.48	4
165.00	140.00	-4.16	-4.48	-17.63	-24.25	4	165.00	140.00	-7.29	-4.49	-17.55	-6.48	4
165.00	150.00	-5.10	-5.77	-15.11	-23.20	4	165.00	150.00	-7.57	-3.95	-17.5	-6.37	4
165.00	160.00	-5.77	-7.91	-13.29	-21.11	4	165.00	160.00	-8.17	-3.79	-18.88	-6.46	4
165.00	170.00	-6.17	-11.31	-12.47	-19.73	4	165.00	170.00	-9.05	-3.99	-19.11	-6.83	4
165.00	180.00	-6.46	-18.00	-12.24	-17.93	4	165.00	180.00	-10.12	-4.77	-15.93	-7.56	4
165.00	190.00	-6.55	-23.22	-12.39	-16.35	4	165.00	190.00	-11.79	-5.83	-12.14	-8.43	4
165.00	200.00	-6.60	-14.96	-12.89	-14.63	4	165.00	200.00	-13.89	-7.53	-9.51	-9.68	4
165.00	210.00	-6.54	-10.95	-12.99	-13.46	4	165.00	210.00	-16.76	-9.83	-7.94	-10.78	4
165.00	220.00	-6.53	-9.05	-12.48	-12.58	4	165.00	220.00	-20.01	-12.52	-7.23	-11.96	4
165.00	230.00	-6.84	-8.69	-11.32	-11.56	4	165.00	230.00	-18.34	-15.24	-7.22	-13.27	4
165.00	240.00	-7.43	-9.16	-10.15	-10.12	4	165.00	240.00	-13.87	-16.98	-7.54	-16.66	4
165.00	250.00	-8.02	-10.33	-9.45	-8.65	4	165.00	250.00	-10.79	-17.34	-7.47	-21.73	4
165.00	260.00	-8.43	-12.34	-9.79	-7.21	4	165.00	260.00	-8.84	-17.95	-6.98	-18.03	4
165.00	270.00	-8.07	-14.84	-11.55	-6.13	4	165.00	270.00	-8.04	-20.07	-5.81	-14.89	4
165.00	280.00	-7.17	-17.06	-14.96	-5.28	4	165.00	280.00	-8.13	-25.93	-4.46	-13.22	4
165.00	290.00	-6.08	-17.97	-21.84	-4.63	4	165.00	290.00	-9.29	-29.37	-3.6	-11.56	4
165.00	300.00	-5.19	-16.89	-37.14	-4.16	4	165.00	300.00	-11.76	-18.83	-3.14	-9.77	4
165.00	310.00	-4.85	-16.13	-22.44	-3.75	4	165.00	310.00	-14.48	-13.76	-3.03	-7.42	4
165.00	320.00	-5.16	-15.03	-18.19	-3.67	4	165.00	320.00	-14.72	-10.62	-2.78	-5.23	4
165.00	330.00	-5.96	-13.45	-15.11	-4.03	4	165.00	330.00	-11.38	-8.72	-2.79	-3.3	4
165.00	340.00	-6.83	-11.77	-12.53	-4.82	4	165.00	340.00	-8.81	-7.67	-2.81	-2.03	4
165.00	350.00	-7.21	-10.81	-10.99	-5.33	4	165.00	350.00	-7.12	-7.59	-2.9	-1.53	4
180.00	0.00	-5.06	-15.40	-5.07	-13.22	4	180.00	0.00	1.44	-1.3	-3.29	-3.24	4
180.00	10.00	-5.34	-13.46	-4.33	-13.46	4	180.00	10.00	1.39	-1.42	-3.89	-3.3	4
180.00	20.00	-5.09	-9.79	-3.29	-12.36	4	180.00	20.00	1.28	-1.76	-5.1	-3.44	4
180.00	30.00	-4.15	-6.72	-2.40	-10.38	4	180.00	30.00	0.95	-2.62	-7.19	-3.96	4
180.00	40.00	-2.91	-4.80	-1.84	-8.29	4	180.00	40.00	0.45	-3.72	-10.04	-4.76	4
180.00	50.00	-1.66	-3.32	-1.45	-6.59	4	180.00	50.00	-0.13	-5.39	-14.96	-5.77	4
180.00	60.00	-0.59	-2.35	-1.30	-5.29	4	180.00	60.00	-0.88	-7.47	-23.22	-6.9	4
180.00	70.00	0.24	-1.74	-1.42	-4.11	4	180.00	70.00	-1.86	-10.58	-17.78	-8.12	4
180.00	80.00	0.78	-1.47	-1.79	-3.23	4	180.00	80.00	-3.15	-13.97	-12.6	-9.84	4
180.00	90.00	1.16	-1.54	-2.32	-2.48	4	180.00	90.00	-4.58	-14.01	-9.48	-12.17	4
180.00	100.00	1.31	-1.80	-2.97	-2.00	4	180.00	100.00	-5.66	-10.29	-7.24	-13.55	4

180.00	110.00	1.23	-2.29	-3.94	-1.88	4	180.00	110.00	-5.6	-7.37	-5.56	-11.35	4
180.00	120.00	0.99	-3.11	-5.27	-2.20	4	180.00	120.00	-4.39	-5.21	-4.12	-8.4	4
180.00	130.00	0.53	-4.33	-7.11	-2.67	4	180.00	130.00	-2.61	-3.68	-2.93	-6.46	4
180.00	140.00	-0.13	-6.04	-9.97	-3.36	4	180.00	140.00	-1	-2.66	-1.67	-5.05	4
180.00	150.00	-1.05	-8.01	-13.35	-4.31	4	180.00	150.00	0.29	-1.99	-3.01	-4.01	4
180.00	160.00	-2.31	-10.30	-10.41	-5.75	4	180.00	160.00	1.35	-1.5	-3.57	-3.17	4
180.00	170.00	-3.86	-11.99	-8.20	-7.18	4	180.00	170.00	2.13	-1.11	-4.75	-2.74	4
180.00	180.00	-5.31	-11.69	-6.45	-7.86	4	180.00	180.00	2.61	-0.97	-6.45	-2.83	4
180.00	190.00	-5.82	-9.39	-5.09	-8.34	4	180.00	190.00	2.81	-1.12	-8.72	-2.75	4
180.00	200.00	-4.97	-7.07	-4.37	-8.45	4	180.00	200.00	2.87	-1.25	-11.7	-2.77	4
180.00	210.00	-3.39	-4.88	-3.95	-7.88	4	180.00	210.00	2.63	-1.95	-15.79	-3.28	4
180.00	220.00	-1.67	-3.25	-3.65	-7.16	4	180.00	220.00	2.19	-2.94	-23.47	-4.03	4
180.00	230.00	-0.30	-2.01	-3.64	-6.24	4	180.00	230.00	1.51	-4.28	-20.7	-4.88	4
180.00	240.00	0.87	-1.03	-3.93	-5.19	4	180.00	240.00	0.6	-6.17	-13.23	-5.76	4
180.00	250.00	1.79	-0.42	-4.45	-4.29	4	180.00	250.00	-0.62	-8.63	-9.04	-6.34	4
180.00	260.00	2.43	-0.11	-5.51	-3.58	4	180.00	260.00	-2.15	-11.28	-6.23	-6.75	4
180.00	270.00	2.83	0.00	-7.35	-3.41	4	180.00	270.00	-3.72	-12.53	-4.42	-6.86	4
180.00	280.00	2.95	-0.16	-10.15	-3.75	4	180.00	280.00	-4.85	-10.99	-3.35	-6.8	4
180.00	290.00	2.81	-0.57	-14.36	-4.47	4	180.00	290.00	-4.89	-8.3	-2.79	-6.74	4
180.00	300.00	2.43	-1.20	-21.73	-5.47	4	180.00	300.00	-3.93	-5.99	-2.6	-6.77	4
180.00	310.00	1.82	-2.13	-25.00	-6.53	4	180.00	310.00	-2.57	-4.18	-2.65	-6.57	4
180.00	320.00	0.97	-3.48	-15.44	-7.77	4	180.00	320.00	-1.33	-2.77	-2.79	-6.2	4
180.00	330.00	-0.08	-5.29	-11.33	-8.97	4	180.00	330.00	-0.26	-1.79	-2.88	-5.63	4
180.00	340.00	-1.38	-7.82	-8.57	-10.34	4	180.00	340.00	0.49	-1.21	-3.1	-4.95	4
180.00	350.00	-2.80	-11.81	-6.59	-11.53	4	180.00	350.00	0.89	-0.93	-3.35	-4.31	4

5180MHz

Theta Plorization							Phi Plorization						
Angle (θ)	Angle (ψ)	Max Gain(dBi)				N_{ANT}	Angle (θ)	Angle (ψ)	Max Gain(dBi)				N_{ANT}
		Ant 1(G1)	Ant 2(G2)	Ant 3(G3)	Ant 4(G4)				Ant 1(G1)	Ant 2(G2)	Ant 3(G3)	Ant 4(G4)	
0.00	0.00	-1.67	-3.82	-17.68	-4.73	4	0.00	0.00	-4.94	-3.01	1.09	3	4
0.00	10.00	-1.88	-3.20	-21.76	-6.44	4	0.00	10.00	-4.97	-3.52	1.16	3.35	4
0.00	20.00	-2.31	-2.54	-16.70	-11.56	4	0.00	20.00	-4.45	-4.94	1.23	3.6	4
0.00	30.00	-3.09	-1.97	-8.55	-17.44	4	0.00	30.00	-3.65	-7.19	0.62	3.56	4
0.00	40.00	-3.93	-1.28	-4.74	-10.50	4	0.00	40.00	-3.05	-11.3	-0.22	3.23	4
0.00	50.00	-4.97	-1.02	-2.71	-5.68	4	0.00	50.00	-2.54	-13.76	-1.03	2.73	4
0.00	60.00	-6.10	-1.11	-1.29	-2.50	4	0.00	60.00	-2.43	-11.68	-2.48	2.1	4
0.00	70.00	-7.31	-1.79	-0.30	-0.36	4	0.00	70.00	-2.39	-9.25	-4.55	0.85	4
0.00	80.00	-8.01	-2.40	0.64	0.95	4	0.00	80.00	-2.54	-7.7	-7.34	-0.79	4
0.00	90.00	-7.77	-2.88	1.30	1.99	4	0.00	90.00	-2.82	-5.43	-13.2	-2.88	4
0.00	100.00	-6.99	-3.38	1.50	2.53	4	0.00	100.00	-3.12	-3.4	-22.72	-6.1	4
0.00	110.00	-6.02	-4.45	1.37	2.90	4	0.00	110.00	-3.37	-2.33	-11.74	-11.09	4
0.00	120.00	-4.64	-5.87	1.03	3.01	4	0.00	120.00	-4.02	-1.88	-6.75	-18.46	4
0.00	130.00	-3.83	-7.66	0.47	2.95	4	0.00	130.00	-4.74	-1.48	-3.95	-11.65	4
0.00	140.00	-3.25	-10.58	-0.35	2.56	4	0.00	140.00	-6.02	-1.07	-1.92	-7.01	4
0.00	150.00	-3.21	-13.12	-2.01	2.01	4	0.00	150.00	-6.92	-0.71	-0.62	-4.17	4
0.00	160.00	-3.08	-13.00	-4.26	1.15	4	0.00	160.00	-7.5	-0.92	0.69	-2.26	4
0.00	170.00	-3.37	-9.93	-7.70	0.04	4	0.00	170.00	-7.27	-1.36	1.25	-0.7	4
0.00	180.00	-3.82	-7.18	-13.66	-1.88	4	0.00	180.00	-6.31	-2.14	1.2	0.57	4
0.00	190.00	-4.43	-5.09	-28.21	-4.33	4	0.00	190.00	-5.22	-3.07	0.96	1.51	4
0.00	200.00	-5.12	-3.39	-18.45	-8.82	4	0.00	200.00	-4.51	-4.38	0.83	2.07	4
0.00	210.00	-6.24	-2.20	-10.88	-13.84	4	0.00	210.00	-3.74	-6.36	0.52	2.21	4
0.00	220.00	-7.03	-1.11	-6.83	-14.34	4	0.00	220.00	-3.03	-8.97	-0.19	2.18	4
0.00	230.00	-7.70	-0.64	-4.20	-8.36	4	0.00	230.00	-2.38	-12.4	-1.06	1.97	4
0.00	240.00	-7.68	-0.36	-2.31	-3.99	4	0.00	240.00	-2.11	-14.07	-2.05	1.55	4
0.00	250.00	-7.30	-0.62	-0.97	-1.14	4	0.00	250.00	-2.22	-10.91	-3.88	0.77	4
0.00	260.00	-6.30	-0.84	-0.06	0.71	4	0.00	260.00	-2.44	-7.29	-6.13	-0.65	4
0.00	270.00	-5.07	-1.45	0.37	1.64	4	0.00	270.00	-2.55	-4.89	-9.75	-2.88	4
0.00	280.00	-4.20	-2.22	0.66	2.34	4	0.00	280.00	-3.1	-3.04	-18.1	-6.41	4
0.00	290.00	-3.69	-3.24	0.63	2.78	4	0.00	290.00	-3.9	-1.73	-18.37	-13.64	4
0.00	300.00	-3.17	-4.65	0.36	3.11	4	0.00	300.00	-4.69	-0.82	-8.5	-24.38	4
0.00	310.00	-2.69	-6.64	-0.27	3.07	4	0.00	310.00	-5.59	-0.3	-5.28	-10.33	4
0.00	320.00	-2.51	-8.99	-1.18	2.70	4	0.00	320.00	-5.71	-0.24	-3.23	-5.66	4
0.00	330.00	-2.39	-10.17	-2.57	1.92	4	0.00	330.00	-5.38	-0.41	-1.67	-2.62	4
0.00	340.00	-2.14	-8.78	-4.66	0.83	4	0.00	340.00	-4.83	-0.62	-0.91	-0.26	4
0.00	350.00	-1.86	-6.44	-7.85	-0.68	4	0.00	350.00	-4.83	-1.02	-0.4	1.22	4
15.00	0.00	-0.35	-2.37	-21.22	-5.33	4	15.00	0.00	-9.52	-1.98	-0.35	2.44	4
15.00	10.00	-0.03	-1.41	-15.18	-9.89	4	15.00	10.00	-8.65	-3.79	-0.48	2.8	4
15.00	20.00	-0.37	-0.68	-8.42	-16.33	4	15.00	20.00	-6.16	-5.09	-0.9	3.11	4
15.00	30.00	-0.73	-0.10	-5.96	-12.25	4	15.00	30.00	-4.04	-5.51	-2.05	2.91	4
15.00	40.00	-1.79	0.22	-4.40	-7.15	4	15.00	40.00	-2.44	-5.72	-3.5	2.22	4
15.00	50.00	-3.27	0.38	-3.00	-3.84	4	15.00	50.00	-1.39	-5.78	-5.06	1.57	4
15.00	60.00	-5.23	0.47	-1.41	-1.40	4	15.00	60.00	-0.83	-4.75	-7.35	0.71	4
15.00	70.00	-7.85	0.26	-0.43	0.67	4	15.00	70.00	-0.86	-3.6	-10.21	-0.53	4
15.00	80.00	-11.57	-0.77	0.14	2.04	4	15.00	80.00	-1.27	-3.08	-13.58	-2.67	4
15.00	90.00	-15.65	-2.28	-0.30	2.45	4	15.00	90.00	-1.86	-2.76	-14.49	-5.32	4
15.00	100.00	-13.90	-4.21	0.05	2.45	4	15.00	100.00	-2.63	-2.52	-20.46	-8.12	4
15.00	110.00	-9.17	-6.47	0.12	1.97	4	15.00	110.00	-4.01	-2.44	-11.59	-11.69	4
15.00	120.00	-6.03	-9.05	-0.37	1.59	4	15.00	120.00	-6.4	-2.38	-6.75	-13.15	4
15.00	130.00	-4.36	-12.22	-1.18	0.96	4	15.00	130.00	-9.54	-2.61	-3.97	-9.47	4
15.00	140.00	-3.47	-15.10	-2.03	0.20	4	15.00	140.00	-14.21	-2.97	-2.02	-5.93	4

15.00	150.00	-3.06	-13.31	-3.41	-1.00	4	15.00	150.00	-16.14	-3.23	-0.94	-3.74	4
15.00	160.00	-3.22	-8.80	-5.18	-2.74	4	15.00	160.00	-12.88	-3.77	-0.19	-2.09	4
15.00	170.00	-3.36	-5.98	-7.06	-5.21	4	15.00	170.00	-10.19	-4.76	0.38	-1.36	4
15.00	180.00	-3.91	-3.84	-8.58	-8.65	4	15.00	180.00	-8.08	-6.82	0.75	-1.1	4
15.00	190.00	-4.76	-2.24	-10.25	-13.23	4	15.00	190.00	-6.07	-9.14	0.62	-1.39	4
15.00	200.00	-5.99	-1.16	-10.18	-18.22	4	15.00	200.00	-4.77	-12.03	0.41	-1.86	4
15.00	210.00	-7.49	-0.61	-7.10	-20.34	4	15.00	210.00	-4.41	-17.33	0.24	-2.2	4
15.00	220.00	-10.14	-0.07	-3.93	-20.90	4	15.00	220.00	-4.15	-26.72	-0.03	-2.69	4
15.00	230.00	-13.54	0.30	-1.90	-12.92	4	15.00	230.00	-3.72	-13.86	-0.95	-3.1	4
15.00	240.00	-23.13	0.49	-0.60	-7.71	4	15.00	240.00	-3.43	-8.38	-2.7	-3.7	4
15.00	250.00	-19.32	0.36	0.42	-5.24	4	15.00	250.00	-3.3	-5.01	-5.07	-5.1	4
15.00	260.00	-10.37	-0.17	1.34	-4.01	4	15.00	260.00	-3.63	-2.74	-9.28	-7.3	4
15.00	270.00	-6.41	-1.17	2.00	-2.86	4	15.00	270.00	-4.78	-1.01	-14.84	-11.87	4
15.00	280.00	-4.32	-2.70	2.27	-1.44	4	15.00	280.00	-7.22	0.42	-16.17	-19.96	4
15.00	290.00	-3.60	-4.82	2.15	-0.64	4	15.00	290.00	-8.97	1.4	-13.15	-31.17	4
15.00	300.00	-3.44	-7.20	1.26	0.05	4	15.00	300.00	-8.34	1.89	-7.77	-17.03	4
15.00	310.00	-3.47	-8.51	0.23	0.44	4	15.00	310.00	-7.04	1.87	-4.52	-9.65	4
15.00	320.00	-3.28	-8.30	-1.27	0.46	4	15.00	320.00	-6.27	1.65	-2.59	-5.06	4
15.00	330.00	-2.83	-6.48	-3.05	-0.01	4	15.00	330.00	-6.53	1.31	-1.32	-1.82	4
15.00	340.00	-1.97	-5.24	-5.29	-0.74	4	15.00	340.00	-6.99	0.72	-0.76	0.17	4
15.00	350.00	-1.77	-4.37	-6.75	-1.46	4	15.00	350.00	-7.3	0.4	-0.46	0.92	4
30.00	0.00	2.20	-7.08	-12.13	-14.92	4	30.00	0.00	-4.26	-3.46	0.63	-1.22	4
30.00	10.00	2.37	-6.77	-16.68	-17.34	4	30.00	10.00	-4.27	-3.68	0.27	-1.84	4
30.00	20.00	2.51	-5.98	-16.65	-13.16	4	30.00	20.00	-4.03	-4.65	-0.28	-3.04	4
30.00	30.00	2.29	-5.24	-9.24	-8.02	4	30.00	30.00	-3.64	-6.95	-1.97	-3.8	4
30.00	40.00	1.61	-4.88	-6.07	-5.08	4	30.00	40.00	-3.28	-8.37	-4.84	-3.84	4
30.00	50.00	0.32	-4.07	-4.87	-3.25	4	30.00	50.00	-2.01	-6.07	-9.5	-3.46	4
30.00	60.00	-2.04	-2.87	-5.52	-1.90	4	30.00	60.00	-0.75	-4.62	-16.41	-3.22	4
30.00	70.00	-5.65	-1.90	-6.53	0.25	4	30.00	70.00	-0.09	-3.87	-20.6	-3.28	4
30.00	80.00	-11.07	-1.71	-4.76	1.38	4	30.00	80.00	-0.32	-3.14	-19	-4.72	4
30.00	90.00	-27.17	-2.59	-2.91	1.67	4	30.00	90.00	-1.45	-2.33	-17.97	-6.51	4
30.00	100.00	-17.15	-4.81	-2.37	1.57	4	30.00	100.00	-2.95	-2.23	-22.01	-6.69	4
30.00	110.00	-14.77	-6.85	-2.28	1.45	4	30.00	110.00	-4.55	-2.84	-16.62	-7.36	4
30.00	120.00	-11.80	-8.47	-2.37	1.60	4	30.00	120.00	-5.99	-4.68	-9.16	-10.37	4
30.00	130.00	-8.39	-8.28	-2.65	1.14	4	30.00	130.00	-9.01	-6.66	-4.87	-6.72	4
30.00	140.00	-6.76	-7.99	-5.19	0.08	4	30.00	140.00	-15.4	-6.7	-4.28	-4.49	4
30.00	150.00	-6.54	-8.97	-7.25	-1.50	4	30.00	150.00	-25.01	-5.99	-3.33	-3.88	4
30.00	160.00	-7.24	-10.98	-9.32	-3.93	4	30.00	160.00	-20.17	-4.74	-2.86	-3.7	4
30.00	170.00	-6.85	-13.37	-10.84	-6.49	4	30.00	170.00	-17.98	-3.55	-2.45	-3.37	4
30.00	180.00	-5.38	-11.48	-10.53	-9.98	4	30.00	180.00	-14.68	-3.31	-2.16	-2.72	4
30.00	190.00	-4.49	-7.74	-8.72	-14.46	4	30.00	190.00	-9.96	-4.62	-1.82	-2.39	4
30.00	200.00	-4.62	-4.62	-6.71	-22.09	4	30.00	200.00	-5.67	-8.06	-1.98	-2.73	4
30.00	210.00	-5.49	-3.08	-5.13	-25.56	4	30.00	210.00	-3.16	-11.96	-1.72	-3.3	4
30.00	220.00	-7.19	-2.67	-4.38	-15.36	4	30.00	220.00	-1.52	-13.59	-2.01	-3.71	4
30.00	230.00	-9.30	-3.16	-3.84	-10.62	4	30.00	230.00	-0.38	-10.59	-2.67	-4.52	4
30.00	240.00	-14.35	-3.45	-2.27	-9.09	4	30.00	240.00	0.54	-7.5	-3.37	-6.28	4
30.00	250.00	-20.31	-3.67	-0.64	-9.63	4	30.00	250.00	0.69	-6.24	-4.64	-6.49	4
30.00	260.00	-11.14	-3.41	0.28	-10.07	4	30.00	260.00	-0.12	-6.15	-7.19	-6.62	4
30.00	270.00	-7.06	-3.60	1.50	-8.09	4	30.00	270.00	-1.47	-4.53	-13.41	-9.88	4
30.00	280.00	-4.18	-4.46	2.80	-7.29	4	30.00	280.00	-3.06	-2.68	-21.77	-18.02	4
30.00	290.00	-2.15	-6.57	3.10	-9.74	4	30.00	290.00	-5.59	-0.44	-11.87	-15.2	4
30.00	300.00	-1.38	-10.23	2.53	-12.77	4	30.00	300.00	-11.64	0.75	-8.05	-15.6	4
30.00	310.00	-1.40	-12.71	1.88	-11.36	4	30.00	310.00	-18.21	0.82	-5.35	-18.45	4
30.00	320.00	-1.47	-11.64	1.03	-6.81	4	30.00	320.00	-11.24	0.44	-3.13	-14.73	4
30.00	330.00	-0.84	-9.35	-0.25	-4.37	4	30.00	330.00	-7.2	-0.12	-1.51	-7.42	4
30.00	340.00	-0.12	-8.68	-1.95	-4.70	4	30.00	340.00	-5.09	-0.83	-0.28	-2.64	4

30.00	350.00	0.63	-8.35	-4.66	-7.96	4	30.00	350.00	-4.44	-1.92	0.36	-0.67	4
45.00	0.00	0.36	-12.12	-9.11	-11.23	4	45.00	0.00	-8.33	-2.67	-1.33	-13.71	4
45.00	10.00	1.57	-11.20	-22.52	-8.07	4	45.00	10.00	-8.88	-3.58	-1.77	-15.64	4
45.00	20.00	2.11	-11.67	-16.00	-7.63	4	45.00	20.00	-5.47	-4.96	-2.92	-6.22	4
45.00	30.00	1.90	-12.25	-10.24	-4.60	4	45.00	30.00	-1.52	-5.71	-5.39	-2.77	4
45.00	40.00	-0.08	-10.51	-7.20	-1.88	4	45.00	40.00	0.47	-5.66	-9.85	-2.2	4
45.00	50.00	-3.81	-8.65	-4.99	-1.19	4	45.00	50.00	0	-5.58	-16.95	-1.9	4
45.00	60.00	-11.15	-7.85	-4.81	-0.19	4	45.00	60.00	-1.28	-6.53	-17.88	-0.82	4
45.00	70.00	-17.43	-9.01	-5.73	1.83	4	45.00	70.00	-1.84	-6.67	-17.1	-2.11	4
45.00	80.00	-16.99	-8.04	-5.49	1.69	4	45.00	80.00	-2.73	-4.05	-21.3	-5.59	4
45.00	90.00	-30.02	-7.33	-4.68	1.54	4	45.00	90.00	-4.66	-3.21	-31.07	-7.6	4
45.00	100.00	-13.44	-7.57	-4.71	2.49	4	45.00	100.00	-5.83	-2.32	-14.09	-10.82	4
45.00	110.00	-8.36	-7.88	-5.23	2.15	4	45.00	110.00	-6.26	-3.08	-9.93	-12.98	4
45.00	120.00	-8.67	-6.98	-5.69	1.50	4	45.00	120.00	-7.31	-4.4	-8.57	-10.74	4
45.00	130.00	-8.89	-6.66	-6.05	1.22	4	45.00	130.00	-8.22	-7.28	-6.88	-8.37	4
45.00	140.00	-8.63	-7.93	-7.27	0.30	4	45.00	140.00	-8.75	-6.85	-5.25	-4.9	4
45.00	150.00	-7.96	-11.00	-8.56	-1.09	4	45.00	150.00	-10.31	-5.1	-3.34	-3.11	4
45.00	160.00	-7.35	-17.20	-9.30	-2.54	4	45.00	160.00	-15.3	-3.61	-1.37	-2.1	4
45.00	170.00	-5.11	-18.22	-8.06	-4.49	4	45.00	170.00	-21.67	-3.65	-0.4	-1.24	4
45.00	180.00	-3.20	-12.03	-6.22	-7.58	4	45.00	180.00	-9.95	-5.53	-0.2	-1.13	4
45.00	190.00	-2.88	-9.71	-5.04	-11.25	4	45.00	190.00	-5.58	-9.56	-0.93	-2.19	4
45.00	200.00	-2.27	-8.97	-3.65	-15.69	4	45.00	200.00	-3	-15.97	-2	-3.57	4
45.00	210.00	-1.94	-8.91	-2.54	-17.66	4	45.00	210.00	-1.45	-21.3	-2.74	-3.11	4
45.00	220.00	-3.16	-8.50	-1.65	-12.75	4	45.00	220.00	0.1	-12.37	-3.26	-2.23	4
45.00	230.00	-7.00	-9.49	-1.21	-10.76	4	45.00	230.00	1.28	-8.3	-4.2	-3.23	4
45.00	240.00	-13.48	-14.04	-0.27	-10.12	4	45.00	240.00	1.92	-7.13	-5.86	-8.17	4
45.00	250.00	-10.80	-11.11	1.29	-7.61	4	45.00	250.00	1.88	-6.03	-9.55	-15.42	4
45.00	260.00	-7.55	-8.66	2.10	-6.77	4	45.00	260.00	0.85	-5.4	-15	-16.26	4
45.00	270.00	-6.83	-8.62	2.31	-7.86	4	45.00	270.00	-1.69	-3.64	-20.58	-17.73	4
45.00	280.00	-6.08	-10.40	2.51	-9.75	4	45.00	280.00	-4.99	-0.92	-15.34	-13.68	4
45.00	290.00	-5.33	-10.03	2.25	-16.59	4	45.00	290.00	-8.96	1.39	-8.6	-18.35	4
45.00	300.00	-4.84	-9.00	1.44	-19.39	4	45.00	300.00	-18.54	1.95	-9.1	-15.67	4
45.00	310.00	-4.45	-8.95	0.80	-12.72	4	45.00	310.00	-20.23	0.99	-7.78	-14	4
45.00	320.00	-3.23	-10.00	-0.55	-7.21	4	45.00	320.00	-15.81	-0.09	-5	-18.98	4
45.00	330.00	-2.01	-12.80	-2.38	-7.87	4	45.00	330.00	-12	-0.85	-4.4	-8	4
45.00	340.00	-1.36	-14.11	-3.57	-11.10	4	45.00	340.00	-9.18	-1.02	-3.53	-5.77	4
45.00	350.00	-1.05	-14.41	-4.32	-14.15	4	45.00	350.00	-8.32	-1.03	-3.07	-5.9	4
60.00	0.00	-0.43	-11.13	-6.06	-15.81	4	60.00	0.00	-10.43	-0.44	-3.12	-7.77	4
60.00	10.00	-0.29	-11.48	-9.11	-18.60	4	60.00	10.00	-9.29	-1.21	-3.58	-8.04	4
60.00	20.00	0.29	-10.30	-21.89	-20.04	4	60.00	20.00	-9.47	-2.61	-5.19	-7.97	4
60.00	30.00	1.09	-9.20	-13.46	-13.54	4	60.00	30.00	-8.25	-4.67	-10.33	-5.15	4
60.00	40.00	0.34	-9.84	-8.42	-8.05	4	60.00	40.00	-4.58	-6.91	-16.41	-1.73	4
60.00	50.00	-2.25	-11.71	-6.16	-3.93	4	60.00	50.00	-2.6	-10.7	-11.11	-0.69	4
60.00	60.00	-4.28	-13.23	-6.04	-1.68	4	60.00	60.00	-2.36	-10.26	-10.23	-1.86	4
60.00	70.00	-7.05	-18.45	-6.82	-1.24	4	60.00	70.00	-2.14	-8.93	-11.89	-2.42	4
60.00	80.00	-13.16	-27.48	-4.80	-1.03	4	60.00	80.00	-3.25	-8.53	-18.69	-4.37	4
60.00	90.00	-8.89	-11.12	-4.37	0.15	4	60.00	90.00	-4.65	-15.36	-28.85	-7.35	4
60.00	100.00	-8.28	-7.80	-4.98	0.18	4	60.00	100.00	-4.96	-9.92	-16.31	-9.19	4
60.00	110.00	-13.26	-7.75	-5.79	1.30	4	60.00	110.00	-6.11	-5.54	-13.01	-9.72	4
60.00	120.00	-14.27	-8.00	-5.66	-0.08	4	60.00	120.00	-7.95	-5.23	-13.68	-10.41	4
60.00	130.00	-8.13	-10.75	-5.25	0.19	4	60.00	130.00	-6.67	-5.4	-9.87	-9.5	4
60.00	140.00	-6.13	-10.33	-5.63	1.46	4	60.00	140.00	-6.7	-6.82	-7.51	-5.53	4
60.00	150.00	-7.79	-7.89	-7.83	0.00	4	60.00	150.00	-7.44	-6.53	-6.05	-1.56	4
60.00	160.00	-10.64	-9.24	-9.15	-1.81	4	60.00	160.00	-8.72	-3.19	-5.07	-0.83	4
60.00	170.00	-11.53	-9.31	-8.68	-3.05	4	60.00	170.00	-12.49	-2.3	-3.74	-0.66	4
60.00	180.00	-10.71	-6.51	-8.09	-4.51	4	60.00	180.00	-17.71	-3.15	-3.76	-0.28	4

60.00	190.00	-8.61	-5.46	-6.59	-6.25	4	60.00	190.00	-10.71	-7.43	-4.79	0.26	4
60.00	200.00	-7.05	-6.24	-4.31	-8.37	4	60.00	200.00	-5.41	-17.2	-5.21	0.08	4
60.00	210.00	-4.85	-7.17	-1.78	-9.97	4	60.00	210.00	-3.38	-19.49	-6.98	-0.68	4
60.00	220.00	-3.30	-7.61	-0.37	-11.79	4	60.00	220.00	-1.59	-8.46	-8.14	-1.71	4
60.00	230.00	-3.30	-9.21	0.00	-14.12	4	60.00	230.00	-0.1	-4.92	-8.43	-2.01	4
60.00	240.00	-4.50	-13.68	-0.02	-20.26	4	60.00	240.00	0.17	-3.84	-9.2	-2.12	4
60.00	250.00	-5.36	-22.86	0.30	-16.16	4	60.00	250.00	0.45	-3.95	-7.82	-5.2	4
60.00	260.00	-6.02	-33.93	2.37	-17.58	4	60.00	260.00	0.62	-4.39	-9.34	-11.38	4
60.00	270.00	-8.68	-13.13	2.87	-25.11	4	60.00	270.00	-1.51	-6.29	-19.35	-17.67	4
60.00	280.00	-6.89	-10.45	1.06	-12.93	4	60.00	280.00	-4.25	-4.85	-21.66	-27.15	4
60.00	290.00	-5.81	-9.79	0.22	-9.48	4	60.00	290.00	-6.72	-0.31	-10.41	-16.84	4
60.00	300.00	-7.46	-9.88	-0.53	-9.35	4	60.00	300.00	-9.43	1.89	-10	-11.33	4
60.00	310.00	-8.11	-11.98	0.39	-9.79	4	60.00	310.00	-8.95	2.05	-9.91	-11.7	4
60.00	320.00	-7.34	-16.84	0.41	-17.89	4	60.00	320.00	-8.74	1.61	-8.32	-9.89	4
60.00	330.00	-6.78	-15.58	-1.86	-16.89	4	60.00	330.00	-8.97	1.53	-5.59	-14.15	4
60.00	340.00	-4.82	-12.95	-3.53	-18.57	4	60.00	340.00	-10.66	1.91	-6.5	-18.36	4
60.00	350.00	-2.02	-11.59	-3.40	-20.69	4	60.00	350.00	-12.79	2.06	-7.35	-9.24	4
75.00	0.00	0.48	-12.59	-5.70	-28.40	4	75.00	0.00	-14.39	-1.75	-2.92	-8.85	4
75.00	10.00	-1.31	-15.16	-9.95	-18.58	4	75.00	10.00	-11.51	-3.68	-4.33	-6.21	4
75.00	20.00	-0.75	-19.04	-18.74	-18.48	4	75.00	20.00	-9.92	-5.37	-12.23	-2.54	4
75.00	30.00	-0.02	-21.40	-14.14	-14.77	4	75.00	30.00	-7.87	-7.86	-13.58	-0.69	4
75.00	40.00	-2.31	-20.51	-12	-8.70	4	75.00	40.00	-4.29	-10.14	-6.9	-1.64	4
75.00	50.00	-7.93	-17.55	-8.42	-8.22	4	75.00	50.00	-3.07	-11	-8.82	-2.76	4
75.00	60.00	-5.1	-15.36	-9.39	-1.88	4	75.00	60.00	-2.65	-8.88	-9.65	-3.76	4
75.00	70.00	-5.57	-16.30	-7.43	0.39	4	75.00	70.00	-3.84	-9.22	-20.51	-7.32	4
75.00	80.00	-10.24	-22.11	-7.28	0.71	4	75.00	80.00	-4.72	-9.97	-18.15	-7.22	4
75.00	90.00	-11.34	-11.35	-10.28	1.20	4	75.00	90.00	-5.4	-6.6	-14.45	-9.54	4
75.00	100.00	-10.7	-6.32	-7.45	2.79	4	75.00	100.00	-8.21	-4.87	-12.08	-11.09	4
75.00	110.00	-11.32	-6.29	-5.46	2.17	4	75.00	110.00	-7.16	-3.11	-15.82	-6.9	4
75.00	120.00	-12.71	-6.43	-4.89	2.00	4	75.00	120.00	-5.05	-1.54	-13.45	-7.37	4
75.00	130.00	-15.09	-10.56	-5.52	1.72	4	75.00	130.00	-6.31	-3.83	-6.65	-5.28	4
75.00	140.00	-13.94	-9.32	-5.25	0.63	4	75.00	140.00	-8.72	-6.76	-4.79	-5.18	4
75.00	150.00	-10.64	-11.44	-4.70	-0.17	4	75.00	150.00	-9.48	-4.68	-3.87	-4.86	4
75.00	160.00	-7.67	-18.01	-4.73	-1.18	4	75.00	160.00	-10.65	-3.7	-3.93	-3.12	4
75.00	170.00	-7.65	-13.11	-4.89	-1.85	4	75.00	170.00	-9.16	-3.92	-4.7	-1.58	4
75.00	180.00	-12.98	-10.59	-4.63	-2.66	4	75.00	180.00	-5.26	-7.41	-4.86	-1.53	4
75.00	190.00	-16.12	-10.24	-3.50	-3.32	4	75.00	190.00	-1.67	-16.5	-4.65	-1.84	4
75.00	200.00	-5.37	-11.10	-1.99	-3.37	4	75.00	200.00	-0.29	-11.34	-5.79	-2.22	4
75.00	210.00	-2.73	-11.02	-0.51	-2.96	4	75.00	210.00	-1.14	-6.26	-7.31	-3.23	4
75.00	220.00	-3.00	-12.16	0.59	-3.52	4	75.00	220.00	-2.84	-3.22	-11.05	-4.16	4
75.00	230.00	-4.37	-14.51	1.38	-5.57	4	75.00	230.00	-3.66	-1.13	-14.35	-3.06	4
75.00	240.00	-5.52	-13.65	0.68	-6.03	4	75.00	240.00	-2.43	-0.53	-18.35	-3.58	4
75.00	250.00	-7.49	-11.68	-0.40	-7.75	4	75.00	250.00	-2.34	-0.68	-25.32	-6.62	4
75.00	260.00	-11.39	-9.14	0.05	-11.29	4	75.00	260.00	-3.3	-2.89	-17.39	-14.3	4
75.00	270.00	-10.79	-9.15	0.34	-9.68	4	75.00	270.00	-3.02	-1.58	-13.51	-21.61	4
75.00	280.00	-8.14	-10.97	1.51	-9.06	4	75.00	280.00	-4.82	0.77	-15.5	-14.55	4
75.00	290.00	-7.93	-13.69	1.41	-10.96	4	75.00	290.00	-6.22	2.08	-11.72	-10.48	4
75.00	300.00	-4.96	-30.29	0.34	-20.04	4	75.00	300.00	-8.35	1.85	-11.7	-8.36	4
75.00	310.00	-3.24	-20.20	0.27	-12.89	4	75.00	310.00	-8.49	1.29	-9.18	-6.59	4
75.00	320.00	-4.80	-16.99	-2.97	-17.00	4	75.00	320.00	-5.02	1.92	-5.41	-5.8	4
75.00	330.00	-1.32	-12.08	-6.19	-13.65	4	75.00	330.00	-5.24	2.35	-6.6	-7.6	4
75.00	340.00	1.61	-11.21	-5.88	-15.05	4	75.00	340.00	-8.87	2.34	-9.28	-17.18	4
75.00	350.00	2.43	-11.77	-5.09	-19.30	4	75.00	350.00	-12.79	1.88	-8.55	-20.04	4
90.00	0.00	0.83	-14.03	-11.93	-16.35	4	90.00	0.00	-17.08	-3.48	-4.67	-5.03	4
90.00	10.00	-1.30	-13.84	-13.16	-16.06	4	90.00	10.00	-16.28	-3.88	-4.04	-6.62	4
90.00	20.00	-4.75	-16.30	-15.22	-11.12	4	90.00	20.00	-12.72	-4.56	-5.74	-6.74	4

90.00	30.00	-2.15	-14.93	-15.10	-9.50	4	90.00	30.00	-9.76	-4.84	-21.05	-2.96	4
90.00	40.00	0.15	-12.97	-10.56	-7.79	4	90.00	40.00	-10.53	-3.8	-6.93	-3.13	4
90.00	50.00	-1.69	-13.63	-11.96	-5.10	4	90.00	50.00	-9.33	-3.83	-7.23	-8.46	4
90.00	60.00	-4.5	-11.81	-9.09	-4.72	4	90.00	60.00	-5.74	-7.34	-14.22	-8.43	4
90.00	70.00	-3.31	-12.32	-12.78	-1.10	4	90.00	70.00	-4.66	-10.4	-8.65	-15.3	4
90.00	80.00	-5.5	-14.19	-7.23	-0.04	4	90.00	80.00	-3.22	-10.42	-21.93	-6.79	4
90.00	90.00	-7.77	-14.63	-5.8	0.75	4	90.00	90.00	-1.95	-4.9	-15.2	-8.84	4
90.00	100.00	-7.06	-13.81	-1.63	1.39	4	90.00	100.00	-4.16	-2.01	-12.08	-20.1	4
90.00	110.00	-6.89	-13.97	-2.69	1.29	4	90.00	110.00	-5.69	-2.45	-16.66	-19.87	4
90.00	120.00	-6.81	-10.28	-3.34	1.36	4	90.00	120.00	-8.18	-2.54	-14.85	-25.4	4
90.00	130.00	-9.10	-12.99	-3.46	1.52	4	90.00	130.00	-10.11	-2.01	-14.66	-9.26	4
90.00	140.00	-8.67	-14.16	-3.19	-0.26	4	90.00	140.00	-7.37	-2.22	-6.16	-13.88	4
90.00	150.00	-6.95	-13.13	-2.81	-1.14	4	90.00	150.00	-6.36	-4.06	-2.27	-15.76	4
90.00	160.00	-5.36	-22.84	-4.22	-0.66	4	90.00	160.00	-8.19	-7.57	-3.26	-8.38	4
90.00	170.00	-5.54	-14.81	-4.26	-0.70	4	90.00	170.00	-11.9	-9.63	-5.33	-6.11	4
90.00	180.00	-8.82	-8.42	-3.02	-2.19	4	90.00	180.00	-14.95	-11.99	-8.2	-5.11	4
90.00	190.00	-19.16	-7.63	-1.82	-2.91	4	90.00	190.00	-10.72	-13.6	-9.26	-3.31	4
90.00	200.00	-7.41	-12.06	-1.04	-3.20	4	90.00	200.00	-7.39	-14.62	-7.51	-2.95	4
90.00	210.00	-2.32	-16.13	-0.64	-2.48	4	90.00	210.00	-4.52	-10.37	-5.65	-2.31	4
90.00	220.00	-0.76	-10.90	-0.15	-1.91	4	90.00	220.00	-2.87	-5.74	-4.36	-2.65	4
90.00	230.00	-1.23	-8.82	0.82	-2.06	4	90.00	230.00	-4.11	-2.81	-7.56	-2.99	4
90.00	240.00	-2.07	-7.52	1.04	-1.81	4	90.00	240.00	-7.2	-0.88	-11.96	-3.6	4
90.00	250.00	-3.04	-7.24	-0.23	-2.40	4	90.00	250.00	-4.24	0.41	-12.23	-8	4
90.00	260.00	-4.99	-8.17	-1.54	-4.76	4	90.00	260.00	-3.76	0.38	-13.6	-13.68	4
90.00	270.00	-6.86	-9.81	-1.24	-5.58	4	90.00	270.00	-3.52	1	-15.86	-18.98	4
90.00	280.00	-4.26	-11.16	-1.00	-7.50	4	90.00	280.00	-4.41	2.83	-13.16	-22.58	4
90.00	290.00	-2.48	-10.72	1.02	-12.34	4	90.00	290.00	-4.83	3.21	-11.31	-16.91	4
90.00	300.00	-2.61	-15.75	0.02	-30.77	4	90.00	300.00	-6.97	2.56	-8.28	-18.34	4
90.00	310.00	-1.07	-11.80	-1.54	-26.20	4	90.00	310.00	-11.16	2.49	-10.66	-12.28	4
90.00	320.00	-2.71	-6.66	-2.68	-14.19	4	90.00	320.00	-9.47	3.09	-12.56	-13.58	4
90.00	330.00	-5.25	-7.77	-5.88	-12.34	4	90.00	330.00	-11.82	2.43	-8.37	-10.29	4
90.00	340.00	-0.24	-13.01	-9.06	-12.86	4	90.00	340.00	-21.14	1.09	-8.22	-17.18	4
90.00	350.00	2.91	-17.18	-10.58	-14.48	4	90.00	350.00	-27.56	-0.12	-11.06	-9.51	4
105.00	0.00	-2.92	-17.03	-20.11	-26.86	4	105.00	0.00	-15.14	-4.88	-10.92	-11.93	4
105.00	10.00	-12.50	-15.41	-20.70	-14.53	4	105.00	10.00	-10.4	-4.6	-10.26	-9.64	4
105.00	20.00	-5.14	-13.88	-26.86	-8.54	4	105.00	20.00	-6.64	-3.75	-15.28	-12.83	4
105.00	30.00	0.01	-11.19	-12.99	-6.51	4	105.00	30.00	-5.37	-2.63	-14.09	-8.69	4
105.00	40.00	-0.52	-10.19	-10.15	-6.15	4	105.00	40.00	-5.7	-4	-7.69	-6.81	4
105.00	50.00	-3.69	-9.08	-17.54	-6.50	4	105.00	50.00	-3.05	-6.82	-11.61	-8.42	4
105.00	60.00	-2.75	-10.62	-8.60	-5.95	4	105.00	60.00	-4.12	-5.6	-10.52	-16.95	4
105.00	70.00	-3.86	-10.70	-5.87	-1.87	4	105.00	70.00	-4.07	-3.61	-11.18	-9.12	4
105.00	80.00	-7.28	-12.23	-3.33	-0.42	4	105.00	80.00	-2.19	-4.25	-34.31	-7.56	4
105.00	90.00	-5.53	-12.78	-3.77	0.79	4	105.00	90.00	-2.29	-2.97	-18.03	-11.99	4
105.00	100.00	-5.58	-10.21	-2.98	0.22	4	105.00	100.00	-2.57	-3.15	-17.62	-26.22	4
105.00	110.00	-8.45	-14.81	-2.51	2.26	4	105.00	110.00	-5.16	-2.15	-11.24	-26.14	4
105.00	120.00	-11.19	-22.24	-1.13	0.99	4	105.00	120.00	-10.14	-1.97	-9.17	-22.56	4
105.00	130.00	-5.19	-14.50	-1.14	0.40	4	105.00	130.00	-10.43	-0.85	-7.88	-8.99	4
105.00	140.00	-1.75	-9.20	-1.66	0.52	4	105.00	140.00	-10.1	-2	-6.6	-9.73	4
105.00	150.00	-0.72	-10.81	-2.59	-0.52	4	105.00	150.00	-14.45	-6.77	-7.23	-10.92	4
105.00	160.00	-1.64	-15.79	-2.97	-1.05	4	105.00	160.00	-19.27	-17.6	-8.41	-9.28	4
105.00	170.00	-4.97	-6.78	-3.04	-1.46	4	105.00	170.00	-12.94	-16.73	-8.83	-7.76	4
105.00	180.00	-15.62	-2.98	-3.06	-1.74	4	105.00	180.00	-15.58	-12.67	-10.38	-6.23	4
105.00	190.00	-11.52	-2.59	-2.66	-1.27	4	105.00	190.00	-12.38	-13.79	-16.09	-4.27	4
105.00	200.00	-3.97	-4.37	-2.53	-0.77	4	105.00	200.00	-9.59	-15.39	-24.66	-3.7	4
105.00	210.00	-2.16	-6.89	-2.10	-0.87	4	105.00	210.00	-8.22	-9.49	-12.8	-4.16	4
105.00	220.00	-2.47	-5.53	-0.45	-1.22	4	105.00	220.00	-9.23	-4.63	-6.53	-4.59	4

105.00	230.00	-3.34	-4.11	1.14	-1.44	4	105.00	230.00	-12.29	-2.2	-4.71	-6.3	4
105.00	240.00	-5.33	-4.09	1.54	-1.91	4	105.00	240.00	-7.84	-0.75	-10.66	-10.43	4
105.00	250.00	-5.99	-7.60	-0.06	-4.11	4	105.00	250.00	-5.14	0.21	-17.99	-9.48	4
105.00	260.00	-4.65	-16.15	-1.04	-5.74	4	105.00	260.00	-4.7	0.96	-15.64	-11.72	4
105.00	270.00	-3.76	-24.79	-3.15	-5.02	4	105.00	270.00	-5.33	1.82	-17.44	-13.12	4
105.00	280.00	-3.77	-21.05	-1.77	-4.49	4	105.00	280.00	-6.26	2	-12.37	-28.79	4
105.00	290.00	-4.12	-20.52	0.15	-10.45	4	105.00	290.00	-6.28	1.54	-13.96	-16.44	4
105.00	300.00	-1.70	-23.47	-0.85	-14.64	4	105.00	300.00	-7.68	1.88	-10.39	-13.95	4
105.00	310.00	-1.88	-8.67	-1.70	-15.13	4	105.00	310.00	-8.87	3.71	-9.29	-17.64	4
105.00	320.00	-4.09	-6.99	-2.79	-14.06	4	105.00	320.00	-14.3	3.99	-13.94	-15.42	4
105.00	330.00	-1.43	-12.26	-4.43	-14.91	4	105.00	330.00	-27.07	2.68	-13.93	-10.5	4
105.00	340.00	0.82	-20.05	-7.12	-14.48	4	105.00	340.00	-24.12	0.8	-13.45	-10.67	4
105.00	350.00	1.30	-23.88	-10.24	-16.28	4	105.00	350.00	-19.73	-0.04	-14.29	-10.65	4
120.00	0.00	-5.77	-28.68	-10.90	-20.16	4	120.00	0.00	-5.59	-4.73	-19.05	-7.52	4
120.00	10.00	-11.73	-22.33	-11.60	-14.68	4	120.00	10.00	-3.8	-4.56	-14.78	-7.78	4
120.00	20.00	-11.80	-21.71	-10.83	-9.30	4	120.00	20.00	-2.17	-3.94	-12.8	-5.59	4
120.00	30.00	-2.81	-16.69	-15.81	-8.55	4	120.00	30.00	-1.39	-4.13	-19.79	-3.46	4
120.00	40.00	-0.30	-9.05	-13.88	-8.65	4	120.00	40.00	-0.55	-5.3	-19.09	-2.99	4
120.00	50.00	-2.23	-5.27	-7.64	-8.81	4	120.00	50.00	-0.65	-6.06	-9.67	-4.65	4
120.00	60.00	-8.39	-3.97	-7.32	-7.08	4	120.00	60.00	-0.41	-6.69	-11.48	-12.35	4
120.00	70.00	-9.39	-4.16	-5.87	-4.66	4	120.00	70.00	-1.73	-7.77	-20.01	-18.79	4
120.00	80.00	-6.43	-6.94	-3.38	-2.47	4	120.00	80.00	-1.61	-6.13	-13.16	-10.9	4
120.00	90.00	-5.45	-6.93	-2.45	-0.17	4	120.00	90.00	-0.93	-4.93	-11.91	-14.73	4
120.00	100.00	-4.41	-4.91	-1.36	1.20	4	120.00	100.00	-1.94	-5.22	-14.26	-19.31	4
120.00	110.00	-5.61	-5.82	-2.32	-0.50	4	120.00	110.00	-3.26	-2.79	-21.07	-15.71	4
120.00	120.00	-10.12	-6.05	-2.99	-0.88	4	120.00	120.00	-5.34	-3.03	-37.26	-10.93	4
120.00	130.00	-7.60	-11.42	-1.64	-1.73	4	120.00	130.00	-4.87	-6.27	-17.73	-10.93	4
120.00	140.00	-3.07	-15.40	-3.86	-1.77	4	120.00	140.00	-7.71	-2.52	-5.3	-12.42	4
120.00	150.00	-0.60	-8.17	-5.78	-1.97	4	120.00	150.00	-19.79	-1.47	-2.81	-16.52	4
120.00	160.00	-0.40	-8.09	-5.18	-2.51	4	120.00	160.00	-9.7	-4.21	-3.43	-15.02	4
120.00	170.00	-1.58	-12.20	-5.63	-2.50	4	120.00	170.00	-5.83	-5.53	-3.94	-12.82	4
120.00	180.00	-3.92	-23.35	-6.45	-2.43	4	120.00	180.00	-5.66	-4.41	-5.14	-10.16	4
120.00	190.00	-8.56	-13.40	-7.24	-3.57	4	120.00	190.00	-7.92	-4.16	-7.39	-8.49	4
120.00	200.00	-16.82	-8.64	-8.09	-4.93	4	120.00	200.00	-15.97	-7.05	-11.56	-9.06	4
120.00	210.00	-7.71	-11.20	-7.75	-5.16	4	120.00	210.00	-18.68	-14.74	-13.02	-12.29	4
120.00	220.00	-3.97	-24.67	-5.34	-4.23	4	120.00	220.00	-11.21	-14.57	-8.53	-10.12	4
120.00	230.00	-2.95	-10.22	-1.78	-3.59	4	120.00	230.00	-12.03	-8.17	-6.61	-8.14	4
120.00	240.00	-3.32	-10.97	0.31	-2.54	4	120.00	240.00	-10.66	-4.56	-6.87	-10.35	4
120.00	250.00	-3.80	-23.28	-0.08	-1.91	4	120.00	250.00	-12.19	-2	-8.76	-14.36	4
120.00	260.00	-3.53	-9.41	-0.96	-1.97	4	120.00	260.00	-11.03	0.13	-8.92	-15.27	4
120.00	270.00	-2.83	-7.59	-2.08	-6.29	4	120.00	270.00	-10.41	1.23	-10.29	-21.9	4
120.00	280.00	-2.10	-8.48	-3.53	-13.13	4	120.00	280.00	-11.76	1.63	-16.04	-18.64	4
120.00	290.00	-2.03	-10.11	-1.88	-8.64	4	120.00	290.00	-9.54	1.8	-14.16	-17.08	4
120.00	300.00	-3.55	-8.75	-2.41	-6.24	4	120.00	300.00	-11.01	1.22	-11.85	-23.91	4
120.00	310.00	-5.18	-7.06	-4.76	-7.34	4	120.00	310.00	-9.72	0.64	-7.64	-18.79	4
120.00	320.00	-8.35	-8.03	-7.16	-11.26	4	120.00	320.00	-7.38	1.14	-8.19	-12.67	4
120.00	330.00	-6.67	-11.78	-6.64	-16.75	4	120.00	330.00	-8.01	0.92	-9.04	-13.05	4
120.00	340.00	-2.62	-7.83	-5.99	-45.28	4	120.00	340.00	-8.53	-0.5	-9.7	-8.06	4
120.00	350.00	-1.28	-6.03	-9.44	-15.20	4	120.00	350.00	-9.92	-1.07	-16.47	-5.27	4
135.00	0.00	-19.65	-5.67	-4.54	-13.29	4	135.00	0.00	-4.07	-2.78	-12.63	-7.35	4
135.00	10.00	-12.09	-7.97	-5.20	-13.47	4	135.00	10.00	-1.76	-2.21	-13.38	-5.08	4
135.00	20.00	-7.06	-21.56	-8.22	-14.89	4	135.00	20.00	-2.12	-3.67	-15.57	-5.76	4
135.00	30.00	-4.79	-8.74	-18.39	-10.69	4	135.00	30.00	-3.93	-7.58	-14.61	-8.37	4
135.00	40.00	-6.86	-6.72	-13.26	-10.80	4	135.00	40.00	-4.99	-10.2	-15.29	-11.88	4
135.00	50.00	-11.79	-8.00	-9.11	-8.31	4	135.00	50.00	-3.48	-9.99	-20.64	-19.45	4
135.00	60.00	-11.16	-7.37	-9.02	-6.04	4	135.00	60.00	-1.8	-11.7	-23.58	-13.3	4

135.00	70.00	-6.52	-6.64	-8.18	-5.60	4	135.00	70.00	-2.92	-18.24	-18.18	-12.23	4
135.00	80.00	-5.19	-6.32	-5.44	-5.59	4	135.00	80.00	-3.29	-14.43	-9.66	-9.99	4
135.00	90.00	-5.21	-2.69	-1.65	-2.79	4	135.00	90.00	-2.04	-8.69	-11.09	-13.41	4
135.00	100.00	-4.32	-1.25	-1.72	-3.69	4	135.00	100.00	-2.97	-5.41	-15.61	-19.35	4
135.00	110.00	-4.72	-3.53	-2.08	-5.14	4	135.00	110.00	-7.65	-4.16	-13.84	-10.59	4
135.00	120.00	-3.97	-10.07	-3.76	-4.79	4	135.00	120.00	-14.93	-5.61	-11.28	-5.18	4
135.00	130.00	-2.75	-15.22	-5.65	-4.42	4	135.00	130.00	-22.86	-6.03	-13.16	-6.04	4
135.00	140.00	-1.09	-13.68	-6.13	-5.26	4	135.00	140.00	-26.97	-6.22	-11.87	-8.57	4
135.00	150.00	0.03	-21.41	-7.09	-4.65	4	135.00	150.00	-15.2	-8.57	-8.53	-8.26	4
135.00	160.00	-0.18	-14.08	-7.86	-3.83	4	135.00	160.00	-9.36	-6.51	-6.62	-6.56	4
135.00	170.00	-1.97	-11.46	-8.58	-3.80	4	135.00	170.00	-5.96	-4	-6.83	-5.55	4
135.00	180.00	-5.09	-12.34	-9.56	-3.64	4	135.00	180.00	-5.48	-3.36	-8.67	-5.61	4
135.00	190.00	-11.16	-14.34	-11.06	-3.56	4	135.00	190.00	-7.92	-4.18	-12.5	-7.26	4
135.00	200.00	-16.02	-14.64	-11.29	-3.33	4	135.00	200.00	-15.58	-5.46	-14.36	-8.88	4
135.00	210.00	-6.62	-10.66	-9.60	-3.24	4	135.00	210.00	-18.94	-7.47	-8.45	-8.77	4
135.00	220.00	-4.52	-5.98	-6.79	-3.18	4	135.00	220.00	-9.8	-9.21	-6.31	-8.7	4
135.00	230.00	-5.98	-4.72	-3.23	-2.95	4	135.00	230.00	-8.08	-7.73	-7.86	-7.61	4
135.00	240.00	-9.89	-4.96	-1.53	-1.99	4	135.00	240.00	-13.97	-4.44	-10.55	-6.11	4
135.00	250.00	-14.22	-5.30	-1.83	-1.90	4	135.00	250.00	-16.66	-1.6	-15.38	-6.68	4
135.00	260.00	-13.11	-6.20	-2.92	-3.68	4	135.00	260.00	-15.26	-0.37	-17.35	-11.16	4
135.00	270.00	-9.99	-8.50	-5.16	-7.17	4	135.00	270.00	-10.6	-2.11	-14.41	-29.07	4
135.00	280.00	-8.42	-9.99	-7.15	-6.83	4	135.00	280.00	-9.51	-2.23	-11.34	-21.84	4
135.00	290.00	-7.44	-8.54	-6.01	-5.63	4	135.00	290.00	-12.46	0.63	-12.49	-16.45	4
135.00	300.00	-8.77	-7.47	-6.90	-3.78	4	135.00	300.00	-10.39	1.53	-14.98	-13.94	4
135.00	310.00	-10.13	-6.88	-8.87	-4.52	4	135.00	310.00	-7.07	0.05	-8.64	-16.5	4
135.00	320.00	-11.53	-6.64	-7.13	-8.95	4	135.00	320.00	-7.62	-2.33	-9.51	-12.04	4
135.00	330.00	-14.36	-7.03	-7.84	-20.34	4	135.00	330.00	-15.72	-1.89	-12.34	-9.07	4
135.00	340.00	-12.06	-9.54	-7.28	-23.03	4	135.00	340.00	-18.21	-1.81	-14.11	-9.49	4
135.00	350.00	-11.71	-12.67	-7.08	-17.55	4	135.00	350.00	-13.3	-2.86	-15.19	-9.4	4
150.00	0.00	-7.94	-9.06	-18.20	-15.66	4	150.00	0.00	-3.9	-3.57	-11.98	-7.97	4
150.00	10.00	-9.56	-11.95	-16.40	-14.15	4	150.00	10.00	-2.94	-4.31	-11.3	-7.25	4
150.00	20.00	-20.33	-18.54	-14.13	-12.92	4	150.00	20.00	-1.38	-6.01	-10.88	-5.73	4
150.00	30.00	-10.98	-21.25	-16.52	-13.27	4	150.00	30.00	-0.19	-8.65	-9.94	-5.91	4
150.00	40.00	-4.79	-14.90	-17.94	-14.43	4	150.00	40.00	-0.6	-10.93	-7.55	-8.54	4
150.00	50.00	-3.35	-12.35	-11.58	-16.76	4	150.00	50.00	-3.12	-11.42	-6.98	-12.77	4
150.00	60.00	-4.58	-12.45	-7.87	-17.18	4	150.00	60.00	-5.12	-12.72	-7.51	-14.71	4
150.00	70.00	-6.48	-17.18	-5.92	-18.69	4	150.00	70.00	-2.85	-9.84	-7.66	-14.9	4
150.00	80.00	-5.30	-13.80	-4.32	-17.07	4	150.00	80.00	-0.8	-7.13	-7.33	-16.06	4
150.00	90.00	-3.74	-7.42	-1.99	-14.28	4	150.00	90.00	-1.7	-7.89	-8.63	-16.66	4
150.00	100.00	-4.03	-6.55	-0.60	-14.28	4	150.00	100.00	-3.88	-9.62	-12.23	-14.23	4
150.00	110.00	-4.94	-8.58	-1.17	-14.15	4	150.00	110.00	-5.32	-7.73	-15.15	-14.86	4
150.00	120.00	-5.31	-11.54	-2.60	-9.03	4	150.00	120.00	-5.99	-4.85	-13.68	-19.25	4
150.00	130.00	-4.46	-8.24	-4.01	-8.21	4	150.00	130.00	-6.17	-3.55	-12.41	-14.55	4
150.00	140.00	-3.02	-5.91	-6.55	-11.93	4	150.00	140.00	-6.08	-3.12	-14.26	-9.19	4
150.00	150.00	-2.07	-6.20	-13.99	-14.87	4	150.00	150.00	-5.82	-2.87	-10.59	-5.66	4
150.00	160.00	-1.73	-7.98	-15.67	-11.81	4	150.00	160.00	-5.2	-4.18	-12.36	-4.24	4
150.00	170.00	-2.14	-7.83	-15.66	-8.35	4	150.00	170.00	-4.07	-7.69	-14.18	-4.82	4
150.00	180.00	-3.46	-6.02	-13.48	-5.94	4	150.00	180.00	-3	-12.53	-14.22	-7.07	4
150.00	190.00	-6.53	-4.73	-11.27	-4.86	4	150.00	190.00	-2.65	-11.16	-12.75	-9.03	4
150.00	200.00	-13.45	-4.93	-9.93	-4.30	4	150.00	200.00	-4	-10.65	-10.88	-10.07	4
150.00	210.00	-13.40	-6.03	-9.19	-4.63	4	150.00	210.00	-6.05	-12.62	-9.31	-10.53	4
150.00	220.00	-6.13	-7.09	-7.90	-4.52	4	150.00	220.00	-6.51	-15.65	-7.7	-8.69	4
150.00	230.00	-3.35	-7.88	-6.57	-3.56	4	150.00	230.00	-4.93	-12.85	-6.93	-6.13	4
150.00	240.00	-3.23	-7.17	-5.58	-3.05	4	150.00	240.00	-3.57	-10.15	-8.12	-5.38	4
150.00	250.00	-5.63	-7.30	-5.03	-3.41	4	150.00	250.00	-3.8	-7.28	-11.48	-7.24	4
150.00	260.00	-10.24	-8.63	-4.32	-3.34	4	150.00	260.00	-5.95	-4.69	-18.55	-12.71	4

150.00	270.00	-16.75	-11.55	-3.82	-2.46	4	150.00	270.00	-11.3	-3.4	-24.49	-17.72	4
150.00	280.00	-17.20	-15.51	-4.00	-1.86	4	150.00	280.00	-16.23	-2.93	-16.41	-16.76	4
150.00	290.00	-11.61	-14.39	-5.95	-1.98	4	150.00	290.00	-14.36	-2.43	-7.91	-14.93	4
150.00	300.00	-9.04	-10.18	-9.11	-2.79	4	150.00	300.00	-13.66	0.09	-6.44	-15.5	4
150.00	310.00	-11.25	-7.06	-12.09	-4.60	4	150.00	310.00	-8.19	2.38	-8.75	-12.35	4
150.00	320.00	-32.39	-5.07	-13.32	-6.29	4	150.00	320.00	-6.43	3.08	-13.91	-8.22	4
150.00	330.00	-13.64	-4.49	-13.31	-8.88	4	150.00	330.00	-8.83	2.08	-17.78	-6.26	4
150.00	340.00	-9.36	-4.94	-14.17	-11.54	4	150.00	340.00	-12.84	-0.66	-14.65	-6.48	4
150.00	350.00	-7.55	-5.85	-15.90	-13.07	4	150.00	350.00	-8.76	-3.64	-14.65	-7.54	4
165.00	0.00	-4.47	-1.01	-16.42	-18.16	4	165.00	0.00	-5.22	-3.64	-13.79	-7.18	4
165.00	10.00	-5.25	-1.55	-15.69	-21.91	4	165.00	10.00	-3.79	-6.71	-12.74	-8.38	4
165.00	20.00	-7.60	-2.15	-14.13	-20.72	4	165.00	20.00	-3.06	-9.75	-11.34	-10.9	4
165.00	30.00	-12.60	-2.63	-11.48	-20.97	4	165.00	30.00	-2.87	-10.79	-10.64	-13.53	4
165.00	40.00	-24.86	-2.81	-9.63	-20.32	4	165.00	40.00	-2.5	-10.67	-11.13	-13.97	4
165.00	50.00	-14.68	-2.96	-7.98	-22.35	4	165.00	50.00	-2.13	-10.13	-10.89	-13.99	4
165.00	60.00	-10.69	-2.91	-6.63	-29.64	4	165.00	60.00	-2.16	-10.58	-10.52	-14.29	4
165.00	70.00	-9.06	-3.14	-5.36	-24.02	4	165.00	70.00	-2.49	-11.7	-11.01	-15.15	4
165.00	80.00	-8.46	-3.19	-4.89	-17.31	4	165.00	80.00	-2.41	-13.87	-11.71	-18.64	4
165.00	90.00	-7.25	-3.35	-2.32	-21.70	4	165.00	90.00	-2.39	-15.81	-14.28	-17.35	4
165.00	100.00	-5.75	-3.66	-3.75	-16.78	4	165.00	100.00	-2.81	-14.7	-26.47	-13.71	4
165.00	110.00	-4.30	-4.47	-5.69	-12.97	4	165.00	110.00	-3.42	-10.58	-20.68	-13	4
165.00	120.00	-3.25	-5.87	-8.13	-12.70	4	165.00	120.00	-4.43	-8.09	-17.99	-12.34	4
165.00	130.00	-2.34	-8.22	-10.39	-14.57	4	165.00	130.00	-5.79	-6.94	-18.46	-12.27	4
165.00	140.00	-2.07	-12.06	-12.23	-16.19	4	165.00	140.00	-6.14	-7.18	-20.39	-11.44	4
165.00	150.00	-2.44	-18.78	-13.11	-14.55	4	165.00	150.00	-5.13	-8.51	-20.78	-11.53	4
165.00	160.00	-3.88	-37.04	-12.68	-11.25	4	165.00	160.00	-3.78	-10.32	-18.68	-11.41	4
165.00	170.00	-6.92	-20.01	-11.81	-8.98	4	165.00	170.00	-3.01	-12.83	-16.1	-12.21	4
165.00	180.00	-14.78	-16.66	-10.34	-7.55	4	165.00	180.00	-2.8	-15.09	-12.08	-13.64	4
165.00	190.00	-14.54	-15.19	-9.77	-6.90	4	165.00	190.00	-3.37	-16.29	-9.18	-15.33	4
165.00	200.00	-6.62	-14.34	-10.35	-6.45	4	165.00	200.00	-4.43	-18.44	-7.78	-16.49	4
165.00	210.00	-3.24	-12.43	-10.69	-6.61	4	165.00	210.00	-5.26	-20.54	-6.91	-15.67	4
165.00	220.00	-1.59	-11.26	-10.93	-7.24	4	165.00	220.00	-5.28	-23.62	-6.9	-14.43	4
165.00	230.00	-1.16	-10.75	-10.81	-7.81	4	165.00	230.00	-5.05	-17.25	-8.53	-13.36	4
165.00	240.00	-1.58	-11.59	-10.72	-7.29	4	165.00	240.00	-4.89	-11.2	-11.3	-12.03	4
165.00	250.00	-2.83	-12.20	-11.52	-6.65	4	165.00	250.00	-5.19	-7.31	-13.64	-12.08	4
165.00	260.00	-4.75	-12.56	-11.88	-6.39	4	165.00	260.00	-5.84	-4.48	-13.51	-13.4	4
165.00	270.00	-6.73	-13.11	-12.12	-5.64	4	165.00	270.00	-6.6	-2.69	-12.91	-14.23	4
165.00	280.00	-8.48	-14.69	-12.40	-5.19	4	165.00	280.00	-7.8	-1.31	-13.66	-15.88	4
165.00	290.00	-9.68	-18.83	-14.33	-5.92	4	165.00	290.00	-8.76	0.03	-14.88	-18.52	4
165.00	300.00	-10.39	-22.58	-16.27	-7.57	4	165.00	300.00	-9.67	1.23	-12.85	-18.05	4
165.00	310.00	-11.14	-11.35	-23.79	-8.96	4	165.00	310.00	-9.71	2.15	-11.37	-15.39	4
165.00	320.00	-10.06	-6.40	-32.26	-9.85	4	165.00	320.00	-9.79	2.52	-10.1	-12.3	4
165.00	330.00	-8.41	-3.35	-18.40	-10.89	4	165.00	330.00	-10.85	2.2	-11.59	-10.37	4
165.00	340.00	-7.14	-1.93	-16.12	-11.98	4	165.00	340.00	-11.16	1.35	-13.39	-8.88	4
165.00	350.00	-6.97	-1.72	-16.00	-13.10	4	165.00	350.00	-11.31	0.7	-13.27	-8.25	4
180.00	0.00	-12.09	-5.26	-13.30	-20.93	4	180.00	0.00	-4.34	-5.72	-19.2	-14.84	4
180.00	10.00	-13.03	-5.09	-12.38	-20.11	4	180.00	10.00	-4.28	-6.17	-19.13	-14.22	4
180.00	20.00	-14.68	-4.54	-12.16	-18.97	4	180.00	20.00	-3.99	-6.85	-19.85	-13.99	4
180.00	30.00	-14.12	-3.94	-12.03	-17.19	4	180.00	30.00	-4.09	-8.23	-17.56	-14.92	4
180.00	40.00	-12.48	-3.59	-12.32	-15.78	4	180.00	40.00	-4.35	-9.01	-14.6	-15.55	4
180.00	50.00	-10.59	-3.53	-13.30	-14.98	4	180.00	50.00	-4.81	-9.29	-12.43	-19.12	4
180.00	60.00	-8.95	-3.84	-14.71	-14.44	4	180.00	60.00	-5.65	-9.09	-11.23	-23.3	4
180.00	70.00	-7.61	-4.34	-16.83	-15.19	4	180.00	70.00	-6.84	-8.72	-10.53	-26.1	4
180.00	80.00	-6.54	-5.07	-20.78	-15.92	4	180.00	80.00	-8.24	-7.6	-10.64	-22.47	4
180.00	90.00	-5.50	-6.15	-25.35	-17.21	4	180.00	90.00	-10.14	-6.45	-10.13	-20.56	4
180.00	100.00	-4.63	-7.36	-25.17	-20.06	4	180.00	100.00	-12.08	-5.51	-10.63	-19.67	4

180.00	110.00	-4.17	-8.02	-19.99	-20.89	4	180.00	110.00	-14.04	-5.04	-10.88	-18.5	4
180.00	120.00	-3.99	-8.66	-17.78	-15.99	4	180.00	120.00	-15.4	-5.02	-11.56	-18.09	4
180.00	130.00	-4.17	-8.95	-15.95	-13.31	4	180.00	130.00	-13.6	-5.04	-12.08	-19.61	4
180.00	140.00	-4.68	-9.32	-14.87	-12.03	4	180.00	140.00	-10.72	-5.08	-14.22	-22.29	4
180.00	150.00	-5.88	-9.15	-12.97	-12.62	4	180.00	150.00	-9.1	-5.37	-13.33	-23.98	4
180.00	160.00	-7.88	-8.74	-13.85	-12.47	4	180.00	160.00	-7.27	-5.75	-11.63	-26.66	4
180.00	170.00	-11.15	-8.52	-15.94	-12.69	4	180.00	170.00	-6.29	-6.12	-10.41	-24.92	4
180.00	180.00	-17.59	-7.51	-17.18	-13.29	4	180.00	180.00	-5.43	-6.75	-10.58	-21.11	4
180.00	190.00	-38.02	-6.40	-19.97	-15.63	4	180.00	190.00	-4.9	-7.85	-10.45	-17.89	4
180.00	200.00	-16.15	-5.66	-23.51	-16.81	4	180.00	200.00	-4.47	-7.9	-9.43	-16.03	4
180.00	210.00	-11.38	-4.69	-22.38	-16.80	4	180.00	210.00	-4.87	-8.82	-9.82	-18.81	4
180.00	220.00	-8.70	-4.11	-17.93	-16.15	4	180.00	220.00	-5.64	-9.85	-10.79	-22.97	4
180.00	230.00	-7.32	-3.76	-15.05	-15.32	4	180.00	230.00	-6.78	-10.74	-12.05	-19.54	4
180.00	240.00	-5.79	-3.46	-10.98	-13.85	4	180.00	240.00	-8.11	-11.24	-11.23	-16.06	4
180.00	250.00	-4.83	-3.25	-8.67	-12.41	4	180.00	250.00	-10.22	-11.09	-10.88	-15.34	4
180.00	260.00	-4.03	-3.10	-8.14	-11.33	4	180.00	260.00	-12.83	-9.8	-12	-17.19	4
180.00	270.00	-3.49	-3.42	-8.65	-10.51	4	180.00	270.00	-16.43	-8.25	-15.84	-19.88	4
180.00	280.00	-3.37	-4.15	-9.89	-10.26	4	180.00	280.00	-16.96	-6.91	-19.89	-17.86	4
180.00	290.00	-3.55	-5.31	-11.99	-11.02	4	180.00	290.00	-13.91	-5.86	-25.48	-17.76	4
180.00	300.00	-4.23	-6.44	-12.74	-13.04	4	180.00	300.00	-10.47	-5.11	-24.65	-19.26	4
180.00	310.00	-5.20	-8.10	-13.70	-14.87	4	180.00	310.00	-8.62	-4.5	-23.78	-18.74	4
180.00	320.00	-6.26	-10.18	-12.39	-17.42	4	180.00	320.00	-7.32	-4.04	-23.9	-14.65	4
180.00	330.00	-7.38	-11.29	-11.54	-21.20	4	180.00	330.00	-6.3	-3.47	-22.68	-12.27	4
180.00	340.00	-8.27	-10.44	-11.20	-25.05	4	180.00	340.00	-5.56	-3.18	-21.27	-11.47	4
180.00	350.00	-8.91	-7.94	-11.69	-24.47	4	180.00	350.00	-4.94	-3.47	-19.64	-11.71	4

5220MHz

Theta Plorization							Phi Plorization						
Angle (θ)	Angle (ψ)	Max Gain(dBi)				N_{ANT}	Angle (θ)	Angle (ψ)	Max Gain(dBi)				N_{ANT}
		Ant 1(G1)	Ant 2(G2)	Ant 3(G3)	Ant 4(G4)				Ant 1(G1)	Ant 2(G2)	Ant 3(G3)	Ant 4(G4)	
0.00	0.00	-1.40	-2.14	-18.14	-4.63	4	0.00	0.00	-7.46	-1.97	1.52	3.64	4
0.00	10.00	-1.44	-1.58	-25.72	-6.53	4	0.00	10.00	-7.07	-2.35	1.5	3.85	4
0.00	20.00	-1.95	-0.75	-14.61	-11.91	4	0.00	20.00	-5.86	-3.52	1.12	3.93	4
0.00	30.00	-2.46	-0.13	-8.01	-17.20	4	0.00	30.00	-4.75	-5.19	0.63	3.8	4
0.00	40.00	-3.06	0.23	-4.74	-9.95	4	0.00	40.00	-3.7	-8.39	0.24	3.59	4
0.00	50.00	-4.23	0.47	-2.63	-5.13	4	0.00	50.00	-2.81	-12.76	-0.7	3.29	4
0.00	60.00	-5.54	0.58	-1.28	-2.29	4	0.00	60.00	-1.95	-11.31	-2.2	2.54	4
0.00	70.00	-7.41	0.14	0.05	-0.16	4	0.00	70.00	-1.56	-8.29	-4.04	1.27	4
0.00	80.00	-8.94	-0.70	0.99	1.28	4	0.00	80.00	-1.4	-6.77	-7.32	-0.39	4
0.00	90.00	-8.86	-1.65	1.61	2.24	4	0.00	90.00	-1.48	-5.01	-12.93	-2.69	4
0.00	100.00	-7.62	-2.72	1.70	2.86	4	0.00	100.00	-2	-2.79	-21.08	-5.88	4
0.00	110.00	-6.16	-3.87	1.58	3.25	4	0.00	110.00	-2.74	-1.14	-12.58	-11.16	4
0.00	120.00	-4.62	-5.07	1.37	3.24	4	0.00	120.00	-3.8	-0.3	-6.9	-16.07	4
0.00	130.00	-3.92	-7.14	0.93	3.01	4	0.00	130.00	-5.29	0.19	-3.65	-11.75	4
0.00	140.00	-3.20	-8.78	-0.04	2.70	4	0.00	140.00	-6.61	0.17	-1.62	-7.08	4
0.00	150.00	-2.82	-10.16	-1.69	2.23	4	0.00	150.00	-8.13	0.05	-0.52	-3.55	4
0.00	160.00	-2.83	-9.06	-4.00	1.47	4	0.00	160.00	-8.94	-0.21	0.57	-1.46	4
0.00	170.00	-3.05	-7.38	-7.53	0.16	4	0.00	170.00	-8.36	-0.6	1.39	-0.15	4
0.00	180.00	-3.31	-5.30	-12.10	-1.64	4	0.00	180.00	-7.15	-1.28	1.87	0.28	4
0.00	190.00	-3.74	-3.48	-22.59	-4.45	4	0.00	190.00	-5.92	-2.31	1.71	1.17	4
0.00	200.00	-4.51	-1.78	-19.09	-8.66	4	0.00	200.00	-4.63	-3.59	1.18	2.33	4
0.00	210.00	-5.29	-0.68	-10.83	-13.87	4	0.00	210.00	-3.88	-5.37	0.88	2.74	4
0.00	220.00	-5.86	0.09	-6.39	-12.08	4	0.00	220.00	-3.47	-7.47	0.36	2.58	4
0.00	230.00	-6.67	0.37	-3.78	-7.43	4	0.00	230.00	-2.91	-9.89	-0.7	2.04	4
0.00	240.00	-6.76	0.43	-1.96	-3.54	4	0.00	240.00	-2.38	-10.76	-2.03	1.63	4
0.00	250.00	-6.72	0.20	-0.47	-0.94	4	0.00	250.00	-2.1	-8.92	-4.2	0.93	4
0.00	260.00	-6.21	-0.02	0.42	1.01	4	0.00	260.00	-1.96	-6.23	-7.36	-0.27	4
0.00	270.00	-5.76	-0.45	0.79	2.20	4	0.00	270.00	-2.28	-4	-10.93	-2.29	4
0.00	280.00	-5.08	-1.26	0.87	2.84	4	0.00	280.00	-2.77	-2.23	-19.37	-5.4	4
0.00	290.00	-4.47	-2.60	0.89	3.10	4	0.00	290.00	-3.17	-1.03	-18.15	-11.19	4
0.00	300.00	-4.12	-4.31	0.42	3.37	4	0.00	300.00	-3.59	-0.02	-7.7	-25.85	4
0.00	310.00	-3.58	-6.29	-0.23	3.35	4	0.00	310.00	-3.6	0.66	-4.5	-9.72	4
0.00	320.00	-3.12	-7.86	-1.31	3.01	4	0.00	320.00	-3.53	0.98	-2.96	-4.29	4
0.00	330.00	-2.45	-8.37	-2.71	2.23	4	0.00	330.00	-3.55	0.82	-1.97	-1.54	4
0.00	340.00	-1.90	-7.18	-4.74	1.07	4	0.00	340.00	-4.11	0.4	-0.88	0.28	4
0.00	350.00	-1.47	-4.93	-6.97	-0.50	4	0.00	350.00	-5.28	-0.39	0.05	1.77	4
15.00	0.00	0.77	-3.56	-18.31	-5.11	4	15.00	0.00	-8.79	-2.08	0.04	2.96	4
15.00	10.00	0.84	-2.03	-13.64	-9.72	4	15.00	10.00	-7.38	-3.95	-0.16	3.58	4
15.00	20.00	0.52	-0.93	-8.96	-15.02	4	15.00	20.00	-5.18	-6.18	-0.92	3.64	4
15.00	30.00	-0.26	-0.23	-6.81	-11.25	4	15.00	30.00	-3.39	-7.47	-2.3	3.22	4
15.00	40.00	-1.28	0.17	-4.99	-6.53	4	15.00	40.00	-1.99	-6.66	-3.28	2.53	4
15.00	50.00	-2.77	0.36	-3.10	-3.14	4	15.00	50.00	-0.85	-5.45	-4.9	1.74	4
15.00	60.00	-4.85	0.28	-1.64	-0.82	4	15.00	60.00	-0.03	-3.85	-7.25	0.84	4
15.00	70.00	-7.99	-0.01	-0.77	1.02	4	15.00	70.00	0.25	-2.34	-9.7	-0.4	4
15.00	80.00	-13.33	-0.65	-0.18	2.35	4	15.00	80.00	0.09	-1.79	-12.32	-2.36	4
15.00	90.00	-17.77	-1.80	-0.39	2.66	4	15.00	90.00	-0.21	-1.67	-14.68	-4.85	4
15.00	100.00	-11.33	-3.10	0.22	2.55	4	15.00	100.00	-0.91	-1.77	-22.33	-8	4
15.00	110.00	-6.58	-4.86	0.05	2.08	4	15.00	110.00	-2.28	-1.7	-11.7	-11.43	4
15.00	120.00	-4.10	-7.07	-0.60	1.57	4	15.00	120.00	-4.51	-1.47	-7.05	-12.06	4
15.00	130.00	-2.70	-9.92	-1.17	0.74	4	15.00	130.00	-7.39	-1.45	-4.06	-8.64	4
15.00	140.00	-2.22	-14.13	-1.79	0.02	4	15.00	140.00	-11.17	-1.69	-2.13	-5.32	4

15.00	150.00	-2.15	-13.84	-3.10	-0.86	4	15.00	150.00	-12.95	-2.04	-0.73	-3	4
15.00	160.00	-2.62	-9.52	-4.88	-2.30	4	15.00	160.00	-10.72	-2.63	0.22	-1.43	4
15.00	170.00	-3.11	-6.04	-7.01	-4.71	4	15.00	170.00	-8.35	-3.63	0.62	-0.53	4
15.00	180.00	-3.71	-3.44	-8.83	-8.23	4	15.00	180.00	-6.42	-4.8	1.01	-0.25	4
15.00	190.00	-4.78	-2.12	-8.93	-13.27	4	15.00	190.00	-5.02	-6.63	0.95	-0.31	4
15.00	200.00	-6.18	-1.03	-8.20	-20.60	4	15.00	200.00	-3.89	-9.99	0.54	-0.98	4
15.00	210.00	-8.25	-0.32	-6.36	-19.39	4	15.00	210.00	-3.1	-15.61	0.01	-1.8	4
15.00	220.00	-11.47	0.13	-3.73	-15.46	4	15.00	220.00	-2.74	-24.42	-0.23	-2.46	4
15.00	230.00	-17.32	0.40	-1.31	-12.67	4	15.00	230.00	-2.28	-13.8	-0.82	-2.74	4
15.00	240.00	-23.29	0.48	0.10	-7.97	4	15.00	240.00	-2.19	-7.62	-2.52	-3.45	4
15.00	250.00	-13.41	0.14	0.92	-5.01	4	15.00	250.00	-2.39	-4.64	-5.03	-4.75	4
15.00	260.00	-8.45	-0.47	1.49	-3.30	4	15.00	260.00	-3.15	-2.27	-8.71	-7.09	4
15.00	270.00	-5.72	-1.36	2.05	-2.37	4	15.00	270.00	-4.78	-0.31	-14.97	-11.04	4
15.00	280.00	-4.05	-2.99	2.24	-1.19	4	15.00	280.00	-7.71	1.15	-13.78	-19.26	4
15.00	290.00	-3.67	-5.43	2.22	-0.22	4	15.00	290.00	-9.7	2.04	-10.68	-23.75	4
15.00	300.00	-3.57	-8.33	1.50	0.47	4	15.00	300.00	-8.82	2.25	-6.78	-13.4	4
15.00	310.00	-3.28	-10.64	0.77	0.85	4	15.00	310.00	-6.86	2.22	-4.01	-7.87	4
15.00	320.00	-2.61	-10.46	-0.56	0.86	4	15.00	320.00	-5.87	1.8	-2.18	-3.77	4
15.00	330.00	-1.82	-8.02	-2.39	0.43	4	15.00	330.00	-5.72	1.12	-1.19	-0.79	4
15.00	340.00	-1.03	-6.47	-4.79	-0.42	4	15.00	340.00	-6.21	0.55	-0.74	0.9	4
15.00	350.00	-0.77	-5.74	-6.74	-1.12	4	15.00	350.00	-6.51	0.14	-0.58	1.48	4
30.00	0.00	2.61	-6.91	-12.62	-14.10	4	30.00	0.00	-3.75	-3.49	0.62	-1.67	4
30.00	10.00	2.85	-6.72	-17.07	-16.21	4	30.00	10.00	-3.9	-3.72	0.29	-2.25	4
30.00	20.00	2.79	-5.78	-15.11	-13.01	4	30.00	20.00	-3.47	-4.01	-0.61	-3.09	4
30.00	30.00	2.45	-4.69	-8.35	-7.46	4	30.00	30.00	-3.08	-5.47	-2.14	-3.32	4
30.00	40.00	1.54	-4.73	-5.18	-4.55	4	30.00	40.00	-2.36	-9.29	-4.87	-3.55	4
30.00	50.00	0.12	-5.04	-4.27	-2.96	4	30.00	50.00	-1.09	-8.7	-9.38	-3.86	4
30.00	60.00	-2.42	-4.32	-5.16	-1.52	4	30.00	60.00	0.18	-5.33	-14.84	-3.37	4
30.00	70.00	-6.63	-3.13	-5.75	0.34	4	30.00	70.00	0.98	-3.45	-15.91	-3.23	4
30.00	80.00	-13.66	-2.33	-4.29	1.45	4	30.00	80.00	0.65	-2.14	-15.91	-4.78	4
30.00	90.00	-39.00	-2.70	-2.96	1.71	4	30.00	90.00	-0.63	-1.75	-17.65	-6.15	4
30.00	100.00	-16.96	-4.28	-2.47	1.81	4	30.00	100.00	-2.04	-1.69	-23.99	-6.27	4
30.00	110.00	-13.53	-6.17	-2.28	1.54	4	30.00	110.00	-3.09	-2.1	-14.97	-7.19	4
30.00	120.00	-9.31	-7.76	-2.47	1.52	4	30.00	120.00	-3.99	-3.63	-8.79	-10.39	4
30.00	130.00	-6.35	-8.04	-2.81	1.36	4	30.00	130.00	-6.11	-5.97	-4.88	-6.52	4
30.00	140.00	-5.05	-8.23	-4.95	0.67	4	30.00	140.00	-9.93	-6.3	-4.25	-4.03	4
30.00	150.00	-4.91	-8.54	-6.82	-0.88	4	30.00	150.00	-14.4	-5.51	-3.61	-3.13	4
30.00	160.00	-5.80	-10.10	-9.34	-2.95	4	30.00	160.00	-16.03	-4.35	-3.38	-2.62	4
30.00	170.00	-6.22	-11.07	-10.51	-5.57	4	30.00	170.00	-15.46	-3.23	-3.15	-2.48	4
30.00	180.00	-5.55	-9.08	-9.97	-9.12	4	30.00	180.00	-12.57	-3.16	-2.6	-2.2	4
30.00	190.00	-4.68	-6.26	-8.12	-15.08	4	30.00	190.00	-8.51	-4.8	-1.88	-1.94	4
30.00	200.00	-4.67	-3.64	-6.79	-26.13	4	30.00	200.00	-4.95	-8.81	-1.62	-2.05	4
30.00	210.00	-5.78	-2.54	-5.12	-27.32	4	30.00	210.00	-2.28	-12.37	-1.42	-2.89	4
30.00	220.00	-7.59	-2.39	-3.92	-16.29	4	30.00	220.00	-0.38	-12.22	-1.75	-3.55	4
30.00	230.00	-9.96	-2.69	-3.24	-10.98	4	30.00	230.00	0.55	-9.26	-2.49	-4.44	4
30.00	240.00	-15.01	-2.81	-2.09	-8.45	4	30.00	240.00	0.76	-6.59	-3.25	-5.93	4
30.00	250.00	-20.06	-3.39	-0.38	-8.62	4	30.00	250.00	0.49	-6.01	-4.3	-6.61	4
30.00	260.00	-12.19	-3.44	0.93	-10.20	4	30.00	260.00	-0.53	-5.63	-6.38	-6	4
30.00	270.00	-7.60	-3.71	1.81	-8.43	4	30.00	270.00	-1.62	-3.73	-11.59	-9.23	4
30.00	280.00	-4.43	-4.48	2.81	-7.03	4	30.00	280.00	-3.17	-1.39	-27.19	-17.42	4
30.00	290.00	-2.56	-6.59	3.14	-9.06	4	30.00	290.00	-6.3	0.72	-11.24	-14.42	4
30.00	300.00	-1.70	-10.36	2.69	-13.11	4	30.00	300.00	-13.29	1.76	-7.67	-14.22	4
30.00	310.00	-1.52	-13.85	1.74	-12.07	4	30.00	310.00	-16.58	1.58	-5.47	-16.4	4
30.00	320.00	-1.19	-13.07	0.71	-6.69	4	30.00	320.00	-10.22	0.97	-3.29	-13.33	4
30.00	330.00	-0.63	-10.37	-0.42	-4.36	4	30.00	330.00	-6.82	0.08	-1.54	-7.27	4
30.00	340.00	0.06	-8.81	-1.92	-4.81	4	30.00	340.00	-4.98	-0.96	-0.1	-2.74	4

30.00	350.00	1.09	-8.23	-4.15	-8.27	4	30.00	350.00	-4.44	-2.12	0.61	-0.71	4
45.00	0.00	0.77	-12.04	-10.42	-9.53	4	45.00	0.00	-10.85	-1.42	-1.3	-12.66	4
45.00	10.00	1.93	-11.68	-28.19	-7.52	4	45.00	10.00	-10.47	-2.54	-1.29	-14.05	4
45.00	20.00	2.45	-11.51	-15.44	-6.80	4	45.00	20.00	-5.19	-4.17	-2.4	-5.14	4
45.00	30.00	2.15	-12.07	-10.06	-4.24	4	45.00	30.00	-1.1	-5.55	-5.67	-1.67	4
45.00	40.00	0.07	-11.22	-6.76	-2.14	4	45.00	40.00	0.65	-6.22	-10.9	-1.45	4
45.00	50.00	-3.97	-8.96	-4.43	-1.44	4	45.00	50.00	0.18	-6.01	-18.13	-1.42	4
45.00	60.00	-11.04	-7.37	-4.95	0.15	4	45.00	60.00	-0.82	-6.02	-15.15	-0.54	4
45.00	70.00	-15.78	-8.03	-6.37	2.15	4	45.00	70.00	-0.93	-7.17	-14.38	-1.97	4
45.00	80.00	-18.80	-8.63	-5.14	1.75	4	45.00	80.00	-1.63	-4.44	-19.91	-5.81	4
45.00	90.00	-29.48	-7.36	-4.64	1.86	4	45.00	90.00	-4.03	-3.04	-24.42	-8.09	4
45.00	100.00	-11.60	-7.51	-4.91	2.75	4	45.00	100.00	-5.55	-1.66	-13.94	-11.92	4
45.00	110.00	-7.42	-7.98	-5.50	1.95	4	45.00	110.00	-6.19	-2.43	-10.57	-13.56	4
45.00	120.00	-7.59	-7.61	-5.86	1.51	4	45.00	120.00	-8.33	-3.52	-8.87	-12.29	4
45.00	130.00	-7.46	-7.10	-6.26	1.35	4	45.00	130.00	-10.61	-6.59	-7.38	-7.91	4
45.00	140.00	-6.76	-7.70	-7.95	0.52	4	45.00	140.00	-11.31	-6.96	-5.33	-4.33	4
45.00	150.00	-6.26	-9.98	-9.92	-0.85	4	45.00	150.00	-13.14	-5.26	-3.03	-3.18	4
45.00	160.00	-6.13	-14.97	-10.36	-2.36	4	45.00	160.00	-17.65	-3.93	-1	-2.62	4
45.00	170.00	-4.75	-17.97	-8.97	-4.12	4	45.00	170.00	-24.99	-4.05	-0.16	-1.81	4
45.00	180.00	-3.12	-12.21	-6.54	-6.87	4	45.00	180.00	-10.11	-6.18	-0.1	-1.41	4
45.00	190.00	-2.86	-10.23	-4.70	-11.05	4	45.00	190.00	-5.11	-10.78	-0.42	-2.05	4
45.00	200.00	-2.45	-9.98	-3.61	-15.79	4	45.00	200.00	-2.68	-16.46	-1.4	-3.8	4
45.00	210.00	-2.19	-8.81	-2.65	-18.44	4	45.00	210.00	-1.11	-20.45	-2.53	-4.02	4
45.00	220.00	-3.14	-8.05	-1.79	-12.99	4	45.00	220.00	0.16	-11.65	-3.34	-2.66	4
45.00	230.00	-6.71	-10.05	-1.01	-9.38	4	45.00	230.00	1.23	-7.8	-3.79	-2.8	4
45.00	240.00	-13.25	-13.05	-0.18	-8.46	4	45.00	240.00	2.11	-7.07	-4.91	-7.11	4
45.00	250.00	-10.95	-9.23	1.21	-7.70	4	45.00	250.00	2.24	-5.94	-7.64	-18.29	4
45.00	260.00	-7.71	-7.43	2.25	-7.03	4	45.00	260.00	0.98	-5.07	-13.59	-15.5	4
45.00	270.00	-7.11	-8.23	2.67	-7.26	4	45.00	270.00	-1.9	-3	-19.1	-17.11	4
45.00	280.00	-6.14	-9.93	2.68	-9.04	4	45.00	280.00	-5.23	-0.36	-17.22	-12.2	4
45.00	290.00	-4.71	-9.70	2.46	-15.17	4	45.00	290.00	-9.53	1.71	-8.64	-16.54	4
45.00	300.00	-4.57	-8.76	1.84	-21.15	4	45.00	300.00	-19.97	1.81	-8.32	-17.13	4
45.00	310.00	-3.99	-8.56	1.19	-13.66	4	45.00	310.00	-16.88	0.76	-7.18	-14.27	4
45.00	320.00	-3.33	-9.83	0.07	-7.37	4	45.00	320.00	-13.66	-0.3	-4.61	-22.27	4
45.00	330.00	-2.60	-12.64	-2.01	-7.85	4	45.00	330.00	-11.81	-0.66	-4.09	-8.6	4
45.00	340.00	-2.06	-13.95	-3.29	-11.41	4	45.00	340.00	-9.33	-0.49	-3.23	-6.34	4
45.00	350.00	-1.65	-14.35	-3.89	-14.64	4	45.00	350.00	-8.72	-0.33	-2.84	-6.03	4
60.00	0.00	-0.21	-10.45	-6.51	-16.75	4	60.00	0.00	-11.34	-0.47	-2.7	-6.27	4
60.00	10.00	-0.13	-10.84	-9.64	-19.32	4	60.00	10.00	-10.63	-1.21	-3.11	-6.72	4
60.00	20.00	0.75	-11.02	-27.01	-19.13	4	60.00	20.00	-10.1	-2.97	-4.97	-7.17	4
60.00	30.00	1.46	-10.61	-13.40	-13.82	4	60.00	30.00	-8.06	-5.45	-9.67	-4.31	4
60.00	40.00	0.63	-10.83	-7.78	-8.01	4	60.00	40.00	-3.82	-7.38	-17.13	-0.8	4
60.00	50.00	-2.21	-11.79	-6.26	-3.49	4	60.00	50.00	-1.62	-9.76	-10.49	-0.23	4
60.00	60.00	-3.90	-12.58	-6.50	-1.73	4	60.00	60.00	-1.93	-13.76	-9.81	-1.79	4
60.00	70.00	-6.85	-14.64	-6.84	-1.57	4	60.00	70.00	-1.53	-10.8	-11.29	-2.15	4
60.00	80.00	-12.98	-25.33	-4.24	-0.26	4	60.00	80.00	-2.47	-7.88	-16.65	-4.17	4
60.00	90.00	-8.10	-13.72	-3.85	0.66	4	60.00	90.00	-4.71	-11.74	-26.12	-6.81	4
60.00	100.00	-9.09	-8.67	-5.34	0.35	4	60.00	100.00	-5.59	-10.86	-16.36	-9.26	4
60.00	110.00	-15.05	-8.13	-5.90	1.26	4	60.00	110.00	-6.84	-6.13	-13.58	-9.7	4
60.00	120.00	-12.92	-8.71	-5.15	-0.06	4	60.00	120.00	-8.53	-4.83	-12.59	-9.89	4
60.00	130.00	-8.06	-10.99	-4.66	0.54	4	60.00	130.00	-6.21	-4.71	-8.58	-8.33	4
60.00	140.00	-5.69	-10.15	-5.00	1.60	4	60.00	140.00	-5.87	-6.13	-7.13	-4.36	4
60.00	150.00	-6.98	-7.23	-7.70	0.28	4	60.00	150.00	-7.1	-6.1	-6.34	-0.64	4
60.00	160.00	-9.77	-7.92	-9.57	-1.30	4	60.00	160.00	-8.86	-2.81	-5.35	-0.03	4
60.00	170.00	-11.38	-9.27	-9.14	-2.56	4	60.00	170.00	-12.72	-2.08	-3.87	-0.04	4
60.00	180.00	-12.10	-6.89	-8.39	-3.91	4	60.00	180.00	-17.22	-3.1	-3.91	0.07	4

60.00	190.00	-9.43	-5.24	-6.39	-5.18	4	60.00	190.00	-9.46	-7.43	-4.87	0.36	4
60.00	200.00	-7.11	-5.79	-3.87	-7.36	4	60.00	200.00	-4.68	-17.94	-5.31	0.46	4
60.00	210.00	-4.85	-6.97	-1.61	-9.22	4	60.00	210.00	-2.61	-16.32	-6.9	-0.17	4
60.00	220.00	-2.72	-7.35	-0.27	-11.28	4	60.00	220.00	-0.35	-7.61	-9.4	-1.18	4
60.00	230.00	-2.61	-8.84	0.48	-13.16	4	60.00	230.00	1.22	-4.62	-9.75	-1.65	4
60.00	240.00	-4.14	-13.38	0.39	-18.11	4	60.00	240.00	1.15	-3.85	-8.98	-1.74	4
60.00	250.00	-5.33	-27.25	0.20	-15.16	4	60.00	250.00	0.92	-4.63	-7.48	-4.87	4
60.00	260.00	-6.14	-21.94	2.39	-16.46	4	60.00	260.00	0.89	-5.11	-9.2	-11.12	4
60.00	270.00	-8.79	-11.15	3.38	-19.73	4	60.00	270.00	-1.64	-6.95	-19.79	-16.98	4
60.00	280.00	-6.97	-9.45	1.66	-15.02	4	60.00	280.00	-4.3	-4.05	-24.33	-21.24	4
60.00	290.00	-5.56	-9.20	0.19	-9.96	4	60.00	290.00	-7.19	0.37	-10.38	-15.03	4
60.00	300.00	-6.63	-9.19	-0.49	-8.72	4	60.00	300.00	-8.91	2.22	-10.13	-10.53	4
60.00	310.00	-7.44	-11.02	0.53	-8.45	4	60.00	310.00	-9.02	2.23	-9.82	-10.45	4
60.00	320.00	-7.60	-15.90	0.61	-14.42	4	60.00	320.00	-10.05	1.56	-7.65	-8.56	4
60.00	330.00	-7.12	-15.86	-1.25	-18.13	4	60.00	330.00	-9.74	1.67	-5.15	-11.97	4
60.00	340.00	-4.66	-12.93	-2.97	-21.72	4	60.00	340.00	-11.42	2.08	-6.21	-14.66	4
60.00	350.00	-2.13	-10.37	-2.72	-22.54	4	60.00	350.00	-13.73	2.27	-6.65	-8.65	4
75.00	0.00	0.54	-12.54	-5.56	-25.65	4	75.00	0.00	-13.31	-1.86	-2.32	-8.2	4
75.00	10.00	-1.27	-16.24	-9.76	-19.23	4	75.00	10.00	-9.78	-4.08	-4.17	-6.44	4
75.00	20.00	-0.36	-21.72	-18.65	-22.08	4	75.00	20.00	-8.57	-6.35	-13.27	-2.44	4
75.00	30.00	0.32	-19.23	-13.46	-13.71	4	75.00	30.00	-8.06	-9.66	-11.99	-0.31	4
75.00	40.00	-2.32	-15.95	-10.99	-8.44	4	75.00	40.00	-4.28	-11.71	-6.79	-1.57	4
75.00	50.00	-7.47	-15.47	-8.19	-7.41	4	75.00	50.00	-2.97	-13.66	-7.86	-2.36	4
75.00	60.00	-3.94	-16.42	-10.23	-1.32	4	75.00	60.00	-2.68	-9.58	-9.56	-3.75	4
75.00	70.00	-5.11	-16.67	-7.43	0.25	4	75.00	70.00	-3.71	-8.58	-20.81	-7.08	4
75.00	80.00	-9.73	-22.45	-8.24	1.26	4	75.00	80.00	-4.77	-10.86	-17.76	-7.85	4
75.00	90.00	-12.57	-11.28	-9.41	1.64	4	75.00	90.00	-4.72	-7.67	-13.42	-9.97	4
75.00	100.00	-11.19	-6.69	-6.86	3.21	4	75.00	100.00	-8.73	-5	-11.36	-10.26	4
75.00	110.00	-10.64	-6.51	-5.07	2.09	4	75.00	110.00	-7.48	-2.89	-16.46	-6.38	4
75.00	120.00	-13.59	-6.80	-5.21	1.83	4	75.00	120.00	-5.49	-1.25	-12.23	-7.08	4
75.00	130.00	-16.98	-10.19	-5.74	1.96	4	75.00	130.00	-6.6	-3.35	-5.98	-5.15	4
75.00	140.00	-13.48	-8.55	-5.02	1.05	4	75.00	140.00	-8.79	-5.63	-4.26	-5.66	4
75.00	150.00	-9.96	-10.19	-4.82	0.46	4	75.00	150.00	-8.76	-4.07	-3.1	-5.28	4
75.00	160.00	-7.72	-17.67	-5.18	-0.86	4	75.00	160.00	-9.24	-3.46	-3.36	-3.41	4
75.00	170.00	-7.27	-15.11	-5.26	-1.62	4	75.00	170.00	-8.63	-4.01	-4.16	-1.74	4
75.00	180.00	-12.05	-11.44	-4.94	-2.44	4	75.00	180.00	-5.32	-7.28	-3.66	-1.33	4
75.00	190.00	-16.85	-10.75	-3.69	-3.06	4	75.00	190.00	-1.69	-14.55	-3.18	-1.6	4
75.00	200.00	-5.47	-11.40	-2.15	-3.35	4	75.00	200.00	-0.02	-9.13	-4.2	-2.03	4
75.00	210.00	-2.64	-12.28	-0.63	-3.30	4	75.00	210.00	-0.63	-5.01	-6.2	-2.62	4
75.00	220.00	-3.08	-12.88	0.56	-3.53	4	75.00	220.00	-2.03	-2.41	-10.9	-3.55	4
75.00	230.00	-4.75	-15.37	1.53	-5.22	4	75.00	230.00	-3.23	-0.72	-16.01	-3.16	4
75.00	240.00	-5.45	-14.58	1.10	-6.42	4	75.00	240.00	-2.19	-0.62	-17.85	-3.5	4
75.00	250.00	-6.40	-11.78	-0.12	-7.20	4	75.00	250.00	-2.01	-1.02	-23.27	-6.01	4
75.00	260.00	-10.95	-9.26	0.03	-11.77	4	75.00	260.00	-2.86	-3.23	-16.69	-12.88	4
75.00	270.00	-11.18	-9.89	0.52	-10.47	4	75.00	270.00	-2.73	-1.65	-14.99	-23.69	4
75.00	280.00	-8.00	-11.20	1.56	-9.28	4	75.00	280.00	-4.88	1.08	-17.13	-14.66	4
75.00	290.00	-7.28	-15.55	1.39	-11.07	4	75.00	290.00	-6.31	2.32	-11.53	-10.82	4
75.00	300.00	-3.99	-35.23	-0.04	-20.21	4	75.00	300.00	-8.59	1.76	-11.47	-8.42	4
75.00	310.00	-2.76	-18.96	0.35	-11.59	4	75.00	310.00	-8.82	1.5	-8.66	-5.81	4
75.00	320.00	-4.96	-15.44	-2.53	-16.95	4	75.00	320.00	-5.43	2.27	-4.58	-5.03	4
75.00	330.00	-1.65	-10.96	-6.24	-12.56	4	75.00	330.00	-6	2.82	-5.71	-7.18	4
75.00	340.00	1.45	-9.88	-5.39	-14.76	4	75.00	340.00	-9.36	2.67	-9.39	-14.51	4
75.00	350.00	2.35	-10.92	-4.57	-17.87	4	75.00	350.00	-13.27	2.13	-8.74	-16.2	4
90.00	0.00	0.69	-14.76	-10.75	-17.78	4	90.00	0.00	-15.11	-3.61	-4.81	-4.63	4
90.00	10.00	-1.51	-15.20	-11.81	-17.18	4	90.00	10.00	-14.81	-4.35	-4.2	-6.05	4
90.00	20.00	-4.99	-18.76	-12.77	-11.32	4	90.00	20.00	-12	-5.32	-6.24	-6.32	4

90.00	30.00	-1.92	-14.72	-13.47	-9.55	4	90.00	30.00	-9.55	-5.67	-18.44	-3.22	4
90.00	40.00	0.38	-12.58	-9.38	-7.91	4	90.00	40.00	-10.42	-4.11	-6.17	-3.85	4
90.00	50.00	-1.39	-13.97	-11.75	-4.88	4	90.00	50.00	-8.55	-4.05	-7.43	-9.19	4
90.00	60.00	-3.67	-11.82	-9.45	-4.45	4	90.00	60.00	-5.15	-7.34	-12.1	-8.8	4
90.00	70.00	-2.32	-11.07	-13.02	-0.62	4	90.00	70.00	-4.45	-11.09	-8	-13.96	4
90.00	80.00	-5.2	-11.84	-7.68	0.12	4	90.00	80.00	-2.81	-9.95	-21.7	-6.23	4
90.00	90.00	-7.91	-14.70	-5.49	0.96	4	90.00	90.00	-1.59	-4.91	-13.94	-10.13	4
90.00	100.00	-7.82	-12.85	-1.49	1.34	4	90.00	100.00	-3.26	-1.95	-11.1	-18.34	4
90.00	110.00	-6.80	-15.14	-2.52	1.78	4	90.00	110.00	-4.93	-2.08	-17.32	-21.8	4
90.00	120.00	-5.94	-10.83	-2.97	1.74	4	90.00	120.00	-7.78	-2.58	-17.25	-29.13	4
90.00	130.00	-7.73	-14.40	-3.55	1.80	4	90.00	130.00	-11.16	-1.83	-11.6	-9.98	4
90.00	140.00	-8.16	-15.14	-3.07	0.01	4	90.00	140.00	-7.25	-1.71	-4.62	-17.21	4
90.00	150.00	-6.45	-12.90	-3.23	-0.99	4	90.00	150.00	-5.48	-3.63	-1.37	-17.52	4
90.00	160.00	-4.92	-23.54	-4.49	0.04	4	90.00	160.00	-7.29	-7.43	-2.56	-6.66	4
90.00	170.00	-5.09	-15.34	-3.83	-0.21	4	90.00	170.00	-11.31	-9.9	-5.1	-5.18	4
90.00	180.00	-8.88	-8.63	-2.64	-2.13	4	90.00	180.00	-14.52	-12.81	-8.22	-5	4
90.00	190.00	-16.61	-8.29	-1.75	-2.76	4	90.00	190.00	-10.7	-13.25	-8.12	-3.13	4
90.00	200.00	-6.85	-12.00	-0.95	-3.11	4	90.00	200.00	-6.78	-12.57	-6.8	-2.87	4
90.00	210.00	-1.75	-13.33	-0.49	-2.97	4	90.00	210.00	-3.77	-8.82	-5.36	-2.31	4
90.00	220.00	-0.28	-10.47	-0.02	-1.81	4	90.00	220.00	-2.41	-4.69	-3.68	-2.34	4
90.00	230.00	-1.02	-8.90	0.53	-1.67	4	90.00	230.00	-4.02	-2.63	-6.32	-2.61	4
90.00	240.00	-2.11	-7.21	1.02	-1.74	4	90.00	240.00	-7.21	-0.83	-12	-3.39	4
90.00	250.00	-2.85	-6.37	-0.26	-1.78	4	90.00	250.00	-4.33	0.61	-11.9	-7.62	4
90.00	260.00	-4.20	-7.52	-1.79	-3.60	4	90.00	260.00	-3.31	0.52	-11	-12.17	4
90.00	270.00	-5.96	-10.96	-1.02	-5.44	4	90.00	270.00	-2.7	1.22	-16.24	-15.66	4
90.00	280.00	-3.33	-12.43	-0.53	-7.72	4	90.00	280.00	-3.76	2.86	-12.85	-33.71	4
90.00	290.00	-2.36	-10.66	1.02	-11.63	4	90.00	290.00	-4.25	3.29	-11.35	-15.4	4
90.00	300.00	-2.50	-16.11	-0.02	-30.17	4	90.00	300.00	-7.2	2.84	-7.96	-15.01	4
90.00	310.00	-0.51	-10.42	-1.60	-30.13	4	90.00	310.00	-11.04	2.58	-11.38	-10.86	4
90.00	320.00	-1.74	-6.01	-2.66	-14.15	4	90.00	320.00	-8.73	3.15	-12.83	-12.27	4
90.00	330.00	-4.26	-7.61	-5.46	-12.41	4	90.00	330.00	-11.35	2.64	-8.79	-9.45	4
90.00	340.00	0.43	-13.03	-8.53	-12.71	4	90.00	340.00	-19.16	1.51	-8.08	-17.74	4
90.00	350.00	3.39	-18.60	-10.01	-14.38	4	90.00	350.00	-24.19	-0.09	-10.93	-9.06	4
105.00	0.00	-2.54	-14.16	-17.66	-22.19	4	105.00	0.00	-15.9	-6.07	-10.74	-11.09	4
105.00	10.00	-12.45	-12.97	-17.12	-13.34	4	105.00	10.00	-10.39	-5.18	-10.49	-9.22	4
105.00	20.00	-4.87	-11.79	-37.63	-8.30	4	105.00	20.00	-6.57	-4.13	-19.17	-12.62	4
105.00	30.00	0.28	-10.11	-13.26	-6.55	4	105.00	30.00	-4.92	-2.1	-12.01	-9.01	4
105.00	40.00	-0.21	-10.42	-9.62	-5.72	4	105.00	40.00	-5.31	-2.97	-7.4	-7.1	4
105.00	50.00	-3.03	-10.26	-20.15	-6.19	4	105.00	50.00	-2.66	-6.82	-12.02	-9.33	4
105.00	60.00	-2.03	-10.93	-8.09	-5.34	4	105.00	60.00	-3.62	-6.98	-9.76	-21.42	4
105.00	70.00	-3.57	-9.77	-5.37	-1.21	4	105.00	70.00	-4.09	-3.78	-10.88	-7.94	4
105.00	80.00	-6.19	-10.79	-2.94	-0.15	4	105.00	80.00	-1.97	-3.33	-38.16	-7.67	4
105.00	90.00	-4.34	-11.88	-2.96	1.30	4	105.00	90.00	-2.28	-2.11	-19	-14.91	4
105.00	100.00	-4.77	-9.14	-2.67	0.44	4	105.00	100.00	-2.35	-3.56	-19.13	-28.06	4
105.00	110.00	-7.95	-12.53	-2.22	2.49	4	105.00	110.00	-4.93	-2.78	-10.29	-20.42	4
105.00	120.00	-11.13	-23.48	-1.03	0.94	4	105.00	120.00	-10.64	-2.19	-9.32	-23.78	4
105.00	130.00	-4.92	-15.91	-0.83	0.77	4	105.00	130.00	-10.66	-0.71	-7.24	-9.64	4
105.00	140.00	-1.66	-9.39	-1.50	0.93	4	105.00	140.00	-9.89	-1.29	-6.27	-10.27	4
105.00	150.00	-0.47	-10.77	-2.34	-0.22	4	105.00	150.00	-13.74	-5.29	-6.58	-9.51	4
105.00	160.00	-1.40	-15.76	-2.65	-0.39	4	105.00	160.00	-21.93	-14.18	-7.46	-8.18	4
105.00	170.00	-4.69	-7.15	-2.70	-0.98	4	105.00	170.00	-12.92	-21.26	-7.91	-6.65	4
105.00	180.00	-15.27	-2.93	-2.65	-1.62	4	105.00	180.00	-16.89	-11.6	-10.38	-5.65	4
105.00	190.00	-11.14	-2.39	-2.38	-1.45	4	105.00	190.00	-14.88	-10.94	-17.79	-4.16	4
105.00	200.00	-3.81	-4.52	-2.50	-0.98	4	105.00	200.00	-11.46	-13.03	-25.11	-3.62	4
105.00	210.00	-2.00	-6.59	-1.89	-0.52	4	105.00	210.00	-9.09	-8.07	-12.53	-3.86	4
105.00	220.00	-1.78	-5.10	-0.12	-1.00	4	105.00	220.00	-9.65	-3.75	-7.05	-4.07	4

105.00	230.00	-2.63	-4.05	1.23	-1.49	4	105.00	230.00	-13.06	-1.88	-4.15	-5.56	4
105.00	240.00	-4.73	-3.86	1.83	-1.32	4	105.00	240.00	-8.12	-0.6	-9.77	-9.95	4
105.00	250.00	-6.22	-7.58	0.33	-3.42	4	105.00	250.00	-5.81	0.39	-19.48	-8.96	4
105.00	260.00	-5.73	-17.54	-1.12	-5.80	4	105.00	260.00	-5.13	1.14	-14.67	-10.96	4
105.00	270.00	-4.45	-28.65	-2.93	-5.05	4	105.00	270.00	-5.4	1.99	-17.19	-12.38	4
105.00	280.00	-4.38	-22.20	-0.92	-4.63	4	105.00	280.00	-6.04	2.42	-11.74	-32	4
105.00	290.00	-4.74	-18.98	0.87	-9.54	4	105.00	290.00	-5.82	2.04	-15.42	-17.76	4
105.00	300.00	-1.90	-20.73	-0.26	-13.99	4	105.00	300.00	-7.64	2.53	-12	-13.43	4
105.00	310.00	-2.30	-7.04	-1.53	-15.62	4	105.00	310.00	-9.55	3.88	-9.89	-18.64	4
105.00	320.00	-4.16	-6.42	-2.70	-13.11	4	105.00	320.00	-15.75	3.85	-13.56	-18.1	4
105.00	330.00	-1.10	-12.44	-3.73	-15.29	4	105.00	330.00	-28.22	2.12	-14.22	-10.42	4
105.00	340.00	1.25	-21.75	-6.52	-13.25	4	105.00	340.00	-30.12	0.08	-15.02	-10.4	4
105.00	350.00	1.52	-30.28	-9.48	-14.57	4	105.00	350.00	-23.55	-0.86	-16.05	-10.52	4
120.00	0.00	-5.74	-22.95	-11.07	-17.14	4	120.00	0.00	-6.12	-4.19	-16.88	-7.36	4
120.00	10.00	-11.73	-19.43	-11.11	-12.78	4	120.00	10.00	-4.03	-4.03	-13.22	-7.81	4
120.00	20.00	-11.42	-19.11	-11.12	-8.35	4	120.00	20.00	-2.42	-3.74	-12.73	-5.41	4
120.00	30.00	-2.26	-12.47	-15.56	-7.88	4	120.00	30.00	-1.43	-4.44	-23.37	-3.31	4
120.00	40.00	0.01	-7.68	-13.15	-8.01	4	120.00	40.00	-0.83	-5.38	-16.88	-2.95	4
120.00	50.00	-2.21	-5.07	-6.63	-8.70	4	120.00	50.00	-0.98	-5.3	-9.04	-4.76	4
120.00	60.00	-8.99	-4.20	-6.60	-6.75	4	120.00	60.00	-0.68	-5.66	-12.03	-13.32	4
120.00	70.00	-9.55	-3.90	-5.72	-3.99	4	120.00	70.00	-1.82	-7.15	-16.14	-18.45	4
120.00	80.00	-6.53	-6.55	-3.06	-2.00	4	120.00	80.00	-1.59	-6.72	-12.69	-11.21	4
120.00	90.00	-5.44	-7.23	-2.06	0.06	4	120.00	90.00	-0.79	-4.67	-12.48	-15.05	4
120.00	100.00	-4.01	-5.11	-0.93	1.32	4	120.00	100.00	-1.62	-4.26	-15.1	-22.36	4
120.00	110.00	-5.24	-5.95	-2.01	-0.53	4	120.00	110.00	-2.77	-2.52	-21.33	-15.58	4
120.00	120.00	-9.81	-5.86	-3.00	-0.65	4	120.00	120.00	-5.02	-2.67	-28.55	-10.37	4
120.00	130.00	-8.01	-10.24	-1.95	-1.58	4	120.00	130.00	-4.75	-7.09	-17.66	-12.61	4
120.00	140.00	-3.14	-17.75	-3.54	-1.36	4	120.00	140.00	-7.66	-2.77	-4.27	-16.32	4
120.00	150.00	-0.51	-9.06	-5.30	-1.25	4	120.00	150.00	-18.08	-1.34	-2.22	-20.49	4
120.00	160.00	-0.18	-8.54	-4.71	-2.19	4	120.00	160.00	-9.15	-3.79	-2.95	-16.66	4
120.00	170.00	-1.32	-12.27	-5.02	-2.60	4	120.00	170.00	-5.53	-5.94	-3.17	-12.85	4
120.00	180.00	-3.49	-21.61	-5.82	-2.51	4	120.00	180.00	-5.32	-4.62	-4.14	-9.53	4
120.00	190.00	-8.14	-13.65	-6.85	-3.26	4	120.00	190.00	-7.5	-3.97	-6.17	-7.12	4
120.00	200.00	-18.53	-8.86	-7.83	-4.48	4	120.00	200.00	-16.59	-6.43	-10.76	-6.98	4
120.00	210.00	-8.14	-11.85	-7.50	-5.37	4	120.00	210.00	-16.46	-13.39	-12.74	-10.35	4
120.00	220.00	-3.98	-23.23	-5.87	-4.20	4	120.00	220.00	-10.13	-13.52	-8.06	-10.12	4
120.00	230.00	-2.71	-9.93	-2.12	-3.02	4	120.00	230.00	-10.93	-7.91	-6.3	-6.96	4
120.00	240.00	-2.85	-11.03	0.46	-2.44	4	120.00	240.00	-10.46	-4.29	-7.34	-9.57	4
120.00	250.00	-3.52	-22.67	0.49	-1.97	4	120.00	250.00	-12.46	-1.21	-8.89	-13.58	4
120.00	260.00	-3.49	-9.60	-0.74	-1.60	4	120.00	260.00	-10.58	0.74	-8.29	-12.05	4
120.00	270.00	-3.02	-8.43	-1.81	-4.95	4	120.00	270.00	-10.02	1.49	-9.44	-17.07	4
120.00	280.00	-2.37	-9.05	-2.37	-12.26	4	120.00	280.00	-10.88	2.15	-17.33	-20.53	4
120.00	290.00	-2.61	-10.04	-1.24	-9.71	4	120.00	290.00	-8.84	2.2	-15.72	-17.89	4
120.00	300.00	-3.77	-8.26	-1.77	-6.50	4	120.00	300.00	-10.74	1.55	-12.45	-24.11	4
120.00	310.00	-5.17	-6.66	-4.14	-6.19	4	120.00	310.00	-10.37	0.89	-7.35	-20.81	4
120.00	320.00	-8.92	-8.43	-6.26	-9.12	4	120.00	320.00	-7.63	1.4	-7.51	-13.66	4
120.00	330.00	-7.12	-11.11	-5.92	-14.38	4	120.00	330.00	-8.21	1.02	-8.69	-12.6	4
120.00	340.00	-2.59	-7.47	-5.77	-25.30	4	120.00	340.00	-9.43	-0.37	-9.18	-7.84	4
120.00	350.00	-1.04	-6.46	-10.29	-15.93	4	120.00	350.00	-11.13	-1.08	-15.96	-5.67	4
135.00	0.00	-19.35	-6.00	-3.64	-13.40	4	135.00	0.00	-4.1	-2.41	-11.83	-7.7	4
135.00	10.00	-12.07	-9.26	-4.76	-13.11	4	135.00	10.00	-1.87	-2.22	-13.55	-5.63	4
135.00	20.00	-7.12	-19.51	-8.65	-13.25	4	135.00	20.00	-2.14	-3.93	-14.57	-6.09	4
135.00	30.00	-4.98	-7.47	-22.60	-9.59	4	135.00	30.00	-3.96	-7.34	-11.42	-8.67	4
135.00	40.00	-7.08	-5.30	-11.69	-9.42	4	135.00	40.00	-5.67	-8.68	-14.55	-12.33	4
135.00	50.00	-13.21	-6.27	-8.15	-8.09	4	135.00	50.00	-4.51	-7.75	-20.91	-16.38	4
135.00	60.00	-11.21	-6.42	-8.54	-6.43	4	135.00	60.00	-2.17	-9.52	-22	-12.6	4

135.00	70.00	-6.68	-5.95	-6.82	-5.14	4	135.00	70.00	-3.07	-13.51	-17.8	-13.23	4
135.00	80.00	-4.92	-6.40	-4.92	-5.29	4	135.00	80.00	-3.85	-16.99	-9.99	-9.66	4
135.00	90.00	-5.22	-3.06	-1.70	-3.08	4	135.00	90.00	-2.55	-8.51	-11.12	-13.72	4
135.00	100.00	-4.17	-1.40	-1.50	-4.14	4	135.00	100.00	-2.94	-4.9	-16.43	-21.05	4
135.00	110.00	-5.33	-3.47	-2.03	-5.36	4	135.00	110.00	-6.92	-3.36	-12.44	-9.38	4
135.00	120.00	-5.17	-9.46	-3.61	-3.77	4	135.00	120.00	-12.48	-5.17	-11.18	-4.76	4
135.00	130.00	-3.37	-14.09	-5.12	-3.49	4	135.00	130.00	-18.27	-6.55	-12.39	-6.45	4
135.00	140.00	-1.26	-12.89	-5.90	-4.52	4	135.00	140.00	-27.37	-6.64	-10.66	-9.79	4
135.00	150.00	0.33	-21.31	-6.74	-4.32	4	135.00	150.00	-14.88	-8.48	-7.48	-7.96	4
135.00	160.00	0.33	-15.57	-7.12	-3.62	4	135.00	160.00	-8.92	-6.77	-5.66	-5.87	4
135.00	170.00	-1.37	-11.08	-8.11	-3.37	4	135.00	170.00	-5.68	-4.37	-5.77	-4.9	4
135.00	180.00	-4.15	-11.33	-9.38	-3.25	4	135.00	180.00	-5.34	-3.3	-7.68	-4.4	4
135.00	190.00	-9.83	-12.33	-11.12	-3.15	4	135.00	190.00	-8.01	-3.89	-12.08	-5.79	4
135.00	200.00	-17.12	-12.32	-12.27	-2.92	4	135.00	200.00	-15.46	-4.84	-15.61	-8.03	4
135.00	210.00	-7.02	-9.39	-10.37	-2.63	4	135.00	210.00	-19.83	-6.84	-8.53	-8.39	4
135.00	220.00	-4.48	-5.45	-6.80	-2.47	4	135.00	220.00	-9.64	-8.65	-5.82	-8.14	4
135.00	230.00	-5.62	-4.06	-3.04	-2.53	4	135.00	230.00	-7.62	-7.37	-6.9	-7.5	4
135.00	240.00	-9.05	-4.36	-1.06	-1.93	4	135.00	240.00	-13.27	-3.81	-10.69	-5.2	4
135.00	250.00	-12.99	-4.96	-1.52	-1.45	4	135.00	250.00	-15.73	-0.92	-15.78	-5.19	4
135.00	260.00	-12.52	-6.08	-2.97	-2.68	4	135.00	260.00	-15.64	-0.24	-15.73	-9.51	4
135.00	270.00	-9.48	-8.91	-4.41	-5.93	4	135.00	270.00	-10.91	-2.62	-12.71	-23.36	4
135.00	280.00	-8.91	-10.16	-5.63	-6.89	4	135.00	280.00	-9.74	-2.13	-10.96	-23.99	4
135.00	290.00	-8.57	-8.02	-4.95	-5.72	4	135.00	290.00	-13.95	0.82	-13.62	-16.91	4
135.00	300.00	-9.08	-6.78	-5.99	-3.53	4	135.00	300.00	-11.47	1.54	-15.31	-13.19	4
135.00	310.00	-9.61	-6.66	-8.44	-4.12	4	135.00	310.00	-7.43	-0.05	-7.16	-16.14	4
135.00	320.00	-11.18	-7.01	-7.02	-7.50	4	135.00	320.00	-8.08	-2.13	-7.9	-13.49	4
135.00	330.00	-12.90	-7.41	-8.08	-17.08	4	135.00	330.00	-16.15	-1.5	-11.41	-9.58	4
135.00	340.00	-10.45	-9.99	-8.29	-21.13	4	135.00	340.00	-18.89	-1.82	-14.11	-8.97	4
135.00	350.00	-10.75	-13.85	-7.92	-17.85	4	135.00	350.00	-13.19	-2.89	-14.12	-9.27	4
150.00	0.00	-8.24	-10.36	-17.41	-14.55	4	150.00	0.00	-4.86	-3.51	-12.03	-7.09	4
150.00	10.00	-10.06	-13.20	-16.17	-13.82	4	150.00	10.00	-3.63	-4.07	-11.4	-6.4	4
150.00	20.00	-21.45	-23.05	-13.79	-12.89	4	150.00	20.00	-1.9	-5.76	-11.03	-5.24	4
150.00	30.00	-11.42	-16.78	-18.00	-12.50	4	150.00	30.00	-0.38	-9	-8.7	-5.65	4
150.00	40.00	-4.98	-12.06	-18.03	-14.21	4	150.00	40.00	-0.79	-11.52	-7.47	-8.1	4
150.00	50.00	-3.41	-10.55	-11.85	-18.26	4	150.00	50.00	-3.2	-11.53	-7.11	-11.97	4
150.00	60.00	-4.39	-9.85	-8.59	-19.22	4	150.00	60.00	-5.43	-11.56	-7.35	-14.35	4
150.00	70.00	-6.36	-12.51	-6.39	-19.18	4	150.00	70.00	-3.06	-10.02	-6.76	-15.67	4
150.00	80.00	-5.23	-16.42	-4.06	-16.08	4	150.00	80.00	-0.95	-6.2	-7.05	-16.65	4
150.00	90.00	-3.71	-8.39	-1.88	-12.77	4	150.00	90.00	-1.45	-6.51	-8.84	-17.71	4
150.00	100.00	-4.08	-6.11	-0.93	-12.17	4	150.00	100.00	-3.43	-8.6	-12.76	-16.16	4
150.00	110.00	-5.51	-7.73	-1.59	-12.16	4	150.00	110.00	-4.79	-7.61	-15.3	-18.35	4
150.00	120.00	-5.87	-11.42	-2.53	-7.88	4	150.00	120.00	-5.22	-4.57	-13.32	-21.3	4
150.00	130.00	-4.92	-8.11	-3.75	-6.98	4	150.00	130.00	-5.15	-3.09	-13.14	-13.79	4
150.00	140.00	-3.34	-5.53	-6.02	-10.00	4	150.00	140.00	-5.24	-2.79	-14.73	-8.76	4
150.00	150.00	-2.32	-5.86	-13.53	-12.70	4	150.00	150.00	-5.12	-2.41	-11.09	-5.49	4
150.00	160.00	-1.70	-7.92	-15.32	-10.52	4	150.00	160.00	-4.64	-3.35	-13.09	-4.07	4
150.00	170.00	-2.15	-7.61	-14.61	-7.85	4	150.00	170.00	-3.94	-6.51	-14.58	-4.56	4
150.00	180.00	-3.22	-5.57	-12.88	-6.12	4	150.00	180.00	-2.71	-11.11	-15.8	-6.53	4
150.00	190.00	-6.03	-4.37	-11.48	-4.91	4	150.00	190.00	-2.44	-10.79	-13.39	-9.78	4
150.00	200.00	-11.96	-4.41	-10.46	-4.24	4	150.00	200.00	-4.03	-10.16	-10.67	-12.1	4
150.00	210.00	-13.02	-5.29	-9.41	-4.17	4	150.00	210.00	-6.05	-12.93	-9.18	-11.05	4
150.00	220.00	-6.30	-6.14	-8.24	-3.87	4	150.00	220.00	-6.36	-15.52	-8.2	-8.41	4
150.00	230.00	-3.59	-6.93	-6.32	-3.44	4	150.00	230.00	-4.73	-12.98	-7.69	-6.4	4
150.00	240.00	-3.59	-6.84	-5.02	-2.74	4	150.00	240.00	-3.66	-9.95	-7.94	-5.31	4
150.00	250.00	-6.12	-6.83	-4.74	-2.74	4	150.00	250.00	-3.77	-6.7	-11.04	-5.85	4
150.00	260.00	-11.11	-8.08	-4.40	-3.21	4	150.00	260.00	-5.45	-4.52	-19.46	-9.83	4

150.00	270.00	-17.76	-11.19	-3.44	-2.59	4	150.00	270.00	-9.96	-3.19	-19.59	-19.9	4
150.00	280.00	-19.33	-16.64	-3.65	-1.62	4	150.00	280.00	-15.12	-2.89	-15.56	-16.61	4
150.00	290.00	-12.01	-15.52	-5.53	-1.80	4	150.00	290.00	-14.1	-2.21	-8.68	-15.09	4
150.00	300.00	-8.85	-9.87	-8.53	-2.82	4	150.00	300.00	-12.07	0.67	-6.32	-16.89	4
150.00	310.00	-11.17	-6.33	-11.02	-4.46	4	150.00	310.00	-7.17	2.86	-8.47	-12.29	4
150.00	320.00	-30.32	-4.27	-11.36	-5.77	4	150.00	320.00	-5.2	3.5	-13.04	-7.83	4
150.00	330.00	-14.68	-3.89	-11.18	-7.14	4	150.00	330.00	-7.44	2.47	-14.81	-5.99	4
150.00	340.00	-9.96	-4.36	-11.58	-9.40	4	150.00	340.00	-13.11	-0.3	-11.55	-6.1	4
150.00	350.00	-8.26	-5.30	-13.44	-11.23	4	150.00	350.00	-10.48	-3.34	-12.45	-7.02	4
165.00	0.00	-4.07	-0.70	-15.25	-17.02	4	165.00	0.00	-5.5	-4.29	-13.71	-6.99	4
165.00	10.00	-5.24	-1.43	-14.65	-24.42	4	165.00	10.00	-3.81	-7.68	-10.94	-8.05	4
165.00	20.00	-7.51	-2.30	-12.83	-23.25	4	165.00	20.00	-3.04	-10.49	-10.44	-10.49	4
165.00	30.00	-12.67	-2.73	-11.28	-19.47	4	165.00	30.00	-2.44	-10.9	-10.88	-12.72	4
165.00	40.00	-20.62	-2.84	-9.48	-19.08	4	165.00	40.00	-1.9	-10.6	-10.77	-13.69	4
165.00	50.00	-12.76	-2.91	-7.80	-20.23	4	165.00	50.00	-1.77	-10.5	-10.19	-13.87	4
165.00	60.00	-8.98	-3.11	-6.31	-24.80	4	165.00	60.00	-1.88	-10.53	-10.88	-13.97	4
165.00	70.00	-7.62	-3.21	-5.49	-28.94	4	165.00	70.00	-2.22	-11.36	-12.03	-15.13	4
165.00	80.00	-7.18	-2.84	-5.32	-19.87	4	165.00	80.00	-2.38	-12.84	-12.48	-19.79	4
165.00	90.00	-6.47	-2.55	-1.97	-23.04	4	165.00	90.00	-2.33	-16.07	-13.44	-19.46	4
165.00	100.00	-5.09	-2.76	-3.56	-15.99	4	165.00	100.00	-2.32	-15.11	-27.39	-15.7	4
165.00	110.00	-3.80	-3.71	-5.73	-13.69	4	165.00	110.00	-2.88	-10.7	-21.25	-14.41	4
165.00	120.00	-2.80	-5.41	-8.47	-13.41	4	165.00	120.00	-4.3	-7.47	-19.69	-14.15	4
165.00	130.00	-2.05	-8.02	-10.62	-13.55	4	165.00	130.00	-6.03	-6.36	-19.14	-14.09	4
165.00	140.00	-1.77	-12.16	-11.56	-13.56	4	165.00	140.00	-6.29	-6.85	-19.16	-13.74	4
165.00	150.00	-2.21	-18.58	-12.09	-12.29	4	165.00	150.00	-5.05	-8.03	-20.08	-11.83	4
165.00	160.00	-3.75	-31.70	-11.96	-10.22	4	165.00	160.00	-3.46	-9.71	-19.41	-10.93	4
165.00	170.00	-7.32	-18.84	-11.19	-8.32	4	165.00	170.00	-2.62	-11.83	-15.9	-11.35	4
165.00	180.00	-15.80	-15.06	-10.05	-7.18	4	165.00	180.00	-2.54	-14.06	-11.97	-14.53	4
165.00	190.00	-14.90	-13.05	-9.26	-6.30	4	165.00	190.00	-3.16	-16.05	-9.45	-16.97	4
165.00	200.00	-6.41	-11.90	-9.34	-5.80	4	165.00	200.00	-4.29	-18.24	-7.96	-19.55	4
165.00	210.00	-3.11	-10.57	-10.11	-6.20	4	165.00	210.00	-5.31	-22.42	-7.35	-21.85	4
165.00	220.00	-1.53	-10.45	-10.77	-6.61	4	165.00	220.00	-5.53	-24.86	-7.01	-18.11	4
165.00	230.00	-1.16	-10.26	-10.67	-6.98	4	165.00	230.00	-5.07	-16.21	-7.77	-15.28	4
165.00	240.00	-1.83	-11.02	-10.25	-7.61	4	165.00	240.00	-4.95	-10.37	-10.5	-14.36	4
165.00	250.00	-3.15	-12.18	-11.17	-7.43	4	165.00	250.00	-4.99	-6.93	-13.09	-12.93	4
165.00	260.00	-5.05	-12.79	-11.18	-6.91	4	165.00	260.00	-5.53	-4.39	-12.67	-11.74	4
165.00	270.00	-7.25	-12.71	-11.42	-6.52	4	165.00	270.00	-6.23	-2.38	-11.13	-13.28	4
165.00	280.00	-8.72	-13.60	-11.81	-6.08	4	165.00	280.00	-7.44	-0.92	-11.88	-16.54	4
165.00	290.00	-9.90	-16.90	-13.33	-6.29	4	165.00	290.00	-8.43	0.31	-15.22	-18.54	4
165.00	300.00	-10.78	-28.16	-16.50	-7.51	4	165.00	300.00	-9.19	1.52	-13.94	-17.7	4
165.00	310.00	-10.96	-12.65	-24.75	-9.12	4	165.00	310.00	-9.29	2.5	-11.51	-15.26	4
165.00	320.00	-9.97	-6.61	-24.56	-9.94	4	165.00	320.00	-9.41	2.88	-9.22	-12.89	4
165.00	330.00	-8.23	-3.14	-18.65	-10.42	4	165.00	330.00	-10.34	2.61	-10.06	-10.57	4
165.00	340.00	-6.86	-1.59	-15.74	-11.46	4	165.00	340.00	-10.92	1.55	-12.28	-8.96	4
165.00	350.00	-6.43	-1.26	-16.33	-12.27	4	165.00	350.00	-11.08	0.76	-13.28	-8.41	4
180.00	0.00	-11.87	-4.29	-12.01	-20.24	4	180.00	0.00	-4.81	-5.94	-17.4	-13.8	4
180.00	10.00	-12.32	-4.01	-10.88	-19.75	4	180.00	10.00	-4.71	-6.49	-18.02	-13.44	4
180.00	20.00	-12.71	-3.50	-11.29	-17.75	4	180.00	20.00	-4.56	-7.47	-17.35	-13.73	4
180.00	30.00	-12.48	-3.28	-11.73	-17.00	4	180.00	30.00	-4.63	-8.77	-15.35	-14.33	4
180.00	40.00	-11.47	-3.00	-12.30	-15.82	4	180.00	40.00	-5.1	-10.05	-13.13	-16.25	4
180.00	50.00	-10.24	-3.04	-12.92	-14.62	4	180.00	50.00	-5.6	-10.59	-11.89	-18.57	4
180.00	60.00	-8.80	-3.42	-14.30	-13.81	4	180.00	60.00	-6.45	-9.79	-11.04	-21.39	4
180.00	70.00	-7.89	-4.26	-16.85	-13.48	4	180.00	70.00	-7.51	-8.37	-10.24	-25.95	4
180.00	80.00	-6.87	-4.77	-21.13	-14.18	4	180.00	80.00	-8.9	-7.1	-10.07	-22.99	4
180.00	90.00	-5.67	-5.99	-24.20	-16.34	4	180.00	90.00	-10.66	-5.85	-9.71	-20.09	4
180.00	100.00	-5.06	-7.04	-20.81	-18.44	4	180.00	100.00	-12.96	-4.94	-10.27	-19.11	4

180.00	110.00	-4.86	-8.48	-17.64	-19.84	4	180.00	110.00	-14.18	-4.35	-10.6	-18.87	4
180.00	120.00	-4.74	-9.71	-16.25	-16.44	4	180.00	120.00	-14.05	-4.25	-11.29	-19.32	4
180.00	130.00	-4.90	-10.50	-14.98	-12.66	4	180.00	130.00	-11.65	-4.3	-12.23	-19.91	4
180.00	140.00	-5.43	-10.18	-14.77	-11.70	4	180.00	140.00	-9.25	-4.5	-14.1	-22.48	4
180.00	150.00	-6.70	-9.13	-12.29	-11.90	4	180.00	150.00	-7.71	-5.09	-13.22	-25.13	4
180.00	160.00	-8.62	-8.31	-12.89	-13.05	4	180.00	160.00	-6.51	-5.88	-11.35	-24.9	4
180.00	170.00	-11.99	-7.70	-15.13	-13.06	4	180.00	170.00	-5.56	-6.82	-10.14	-23.86	4
180.00	180.00	-18.97	-6.65	-17.13	-13.85	4	180.00	180.00	-5.18	-8.02	-9.91	-24.01	4
180.00	190.00	-30.65	-6.09	-21.37	-14.13	4	180.00	190.00	-5.25	-9.31	-10.14	-19.48	4
180.00	200.00	-15.27	-5.48	-24.48	-15.06	4	180.00	200.00	-5.14	-9.05	-9.46	-17	4
180.00	210.00	-10.61	-4.73	-20.48	-15.44	4	180.00	210.00	-5.42	-10.04	-9.84	-16.23	4
180.00	220.00	-8.55	-4.03	-16.42	-15.55	4	180.00	220.00	-6.46	-10.43	-10.08	-16.9	4
180.00	230.00	-7.09	-3.53	-12.70	-14.99	4	180.00	230.00	-7.69	-11.13	-10.41	-19.77	4
180.00	240.00	-5.99	-3.26	-9.95	-13.84	4	180.00	240.00	-9.37	-10.98	-10.77	-19.56	4
180.00	250.00	-5.17	-3.21	-7.67	-12.36	4	180.00	250.00	-11.2	-10.05	-10.79	-17.25	4
180.00	260.00	-4.42	-3.48	-7.34	-11.53	4	180.00	260.00	-13.77	-8.65	-12.63	-17.77	4
180.00	270.00	-4.11	-3.82	-8.24	-10.90	4	180.00	270.00	-16.89	-7.32	-16.65	-17.27	4
180.00	280.00	-3.90	-4.59	-9.41	-10.91	4	180.00	280.00	-17.62	-6.17	-21.65	-18.24	4
180.00	290.00	-4.05	-5.65	-11.90	-11.66	4	180.00	290.00	-13.98	-5.22	-22.62	-18.29	4
180.00	300.00	-4.67	-7.26	-12.93	-13.34	4	180.00	300.00	-10.87	-4.26	-20.4	-18.4	4
180.00	310.00	-5.63	-8.93	-13.25	-15.11	4	180.00	310.00	-9.56	-3.47	-22.68	-15.54	4
180.00	320.00	-6.66	-9.91	-10.62	-17.80	4	180.00	320.00	-7.86	-3.25	-29.41	-13.17	4
180.00	330.00	-7.68	-10.65	-10.11	-22.26	4	180.00	330.00	-6.83	-3.17	-30.88	-11.94	4
180.00	340.00	-8.50	-9.58	-10.60	-27.47	4	180.00	340.00	-5.74	-3.13	-26.11	-11.8	4
180.00	350.00	-9.26	-7.12	-10.79	-25.28	4	180.00	350.00	-5.12	-3.4	-21.65	-12.84	4

5240MHz

Theta Plorization							Phi Plorization						
Angle (θ)	Angle (ψ)	Max Gain(dBi)				N_{ANT}	Angle (θ)	Angle (ψ)	Max Gain(dBi)				N_{ANT}
		Ant 1(G1)	Ant 2(G2)	Ant 3(G3)	Ant 4(G4)				Ant 1(G1)	Ant 2(G2)	Ant 3(G3)	Ant 4(G4)	
0.00	0.00	-1.15	-1.85	-18.94	-4.98	4	0.00	0.00	-8.52	-1.86	1.09	3.44	4
0.00	10.00	-1.40	-1.32	-27.79	-6.89	4	0.00	10.00	-8.11	-2.50	1.07	3.61	4
0.00	20.00	-1.66	-0.42	-14.30	-12.68	4	0.00	20.00	-6.38	-3.71	0.70	3.65	4
0.00	30.00	-2.23	0.36	-8.31	-16.98	4	0.00	30.00	-4.78	-5.16	0.58	3.62	4
0.00	40.00	-3.06	0.73	-4.98	-9.78	4	0.00	40.00	-3.48	-7.42	0.14	3.55	4
0.00	50.00	-4.36	0.99	-2.89	-5.02	4	0.00	50.00	-2.43	-11.36	-0.92	3.14	4
0.00	60.00	-5.91	1.03	-1.40	-2.17	4	0.00	60.00	-1.42	-11.86	-2.40	2.38	4
0.00	70.00	-8.11	0.71	0.13	-0.09	4	0.00	70.00	-0.85	-8.29	-4.19	1.15	4
0.00	80.00	-9.31	-0.04	1.03	1.25	4	0.00	80.00	-0.73	-6.11	-7.64	-0.46	4
0.00	90.00	-9.44	-1.13	1.51	2.20	4	0.00	90.00	-0.96	-4.59	-13.12	-2.76	4
0.00	100.00	-8.23	-2.28	1.59	2.87	4	0.00	100.00	-1.46	-2.81	-20.98	-6.12	4
0.00	110.00	-6.20	-3.67	1.55	3.29	4	0.00	110.00	-2.47	-1.15	-13.22	-11.64	4
0.00	120.00	-4.73	-5.41	1.45	3.27	4	0.00	120.00	-3.79	-0.21	-7.56	-15.64	4
0.00	130.00	-3.75	-7.08	1.00	3.04	4	0.00	130.00	-5.32	0.15	-3.97	-10.93	4
0.00	140.00	-3.06	-8.42	-0.04	2.67	4	0.00	140.00	-6.95	0.17	-1.80	-7.05	4
0.00	150.00	-2.60	-9.18	-1.90	2.08	4	0.00	150.00	-8.50	0.03	-0.57	-3.97	4
0.00	160.00	-2.35	-8.57	-4.18	1.35	4	0.00	160.00	-9.64	-0.27	0.30	-1.62	4
0.00	170.00	-2.56	-6.56	-7.50	0.16	4	0.00	170.00	-8.81	-0.49	1.02	-0.09	4
0.00	180.00	-2.96	-4.41	-12.10	-1.75	4	0.00	180.00	-7.51	-1.19	1.60	0.27	4
0.00	190.00	-3.26	-2.71	-22.71	-4.47	4	0.00	190.00	-6.45	-2.46	1.71	0.69	4
0.00	200.00	-4.08	-1.16	-20.42	-8.92	4	0.00	200.00	-5.11	-3.89	1.25	1.79	4
0.00	210.00	-4.69	-0.15	-10.74	-14.26	4	0.00	210.00	-4.30	-5.56	0.66	2.56	4
0.00	220.00	-5.28	0.30	-6.46	-11.78	4	0.00	220.00	-3.63	-7.41	0.45	2.53	4
0.00	230.00	-6.23	0.53	-3.79	-6.98	4	0.00	230.00	-3.43	-9.81	-0.44	1.91	4
0.00	240.00	-6.55	0.48	-1.92	-3.42	4	0.00	240.00	-3.08	-9.90	-1.92	1.22	4
0.00	250.00	-6.79	0.39	-0.44	-0.93	4	0.00	250.00	-2.68	-8.19	-4.08	0.47	4
0.00	260.00	-6.76	0.17	0.41	0.94	4	0.00	260.00	-2.58	-6.10	-7.56	-0.65	4
0.00	270.00	-6.45	-0.34	0.88	2.32	4	0.00	270.00	-2.68	-4.14	-12.22	-2.61	4
0.00	280.00	-6.08	-1.20	1.04	3.06	4	0.00	280.00	-2.81	-2.50	-21.67	-5.69	4
0.00	290.00	-5.43	-2.59	0.95	3.28	4	0.00	290.00	-2.92	-1.43	-18.27	-11.33	4
0.00	300.00	-4.96	-4.44	0.40	3.32	4	0.00	300.00	-2.85	-0.24	-8.03	-21.76	4
0.00	310.00	-4.15	-6.49	-0.32	3.28	4	0.00	310.00	-2.90	0.42	-4.98	-9.18	4
0.00	320.00	-3.28	-8.37	-1.47	2.84	4	0.00	320.00	-3.02	0.92	-3.59	-4.21	4
0.00	330.00	-2.58	-8.29	-2.92	2.16	4	0.00	330.00	-3.52	0.94	-2.15	-1.56	4
0.00	340.00	-2.02	-6.98	-4.60	1.00	4	0.00	340.00	-4.36	0.53	-0.87	0.18	4
0.00	350.00	-1.44	-4.58	-6.84	-0.54	4	0.00	350.00	-6.18	-0.13	-0.12	1.70	4
15.00	0.00	1.03	-4.39	-16.81	-5.14	4	15.00	0.00	-8.01	-2.59	0.01	3.06	4
15.00	10.00	1.11	-2.73	-13.85	-9.79	4	15.00	10.00	-6.52	-4.29	-0.37	3.55	4
15.00	20.00	0.61	-1.05	-9.74	-14.47	4	15.00	20.00	-4.54	-6.76	-1.35	3.46	4
15.00	30.00	-0.12	-0.11	-7.38	-10.94	4	15.00	30.00	-3.03	-8.73	-2.41	2.96	4
15.00	40.00	-1.21	0.23	-5.11	-6.30	4	15.00	40.00	-1.74	-7.89	-3.42	2.17	4
15.00	50.00	-2.53	0.23	-3.24	-3.10	4	15.00	50.00	-0.69	-6.09	-5.26	1.43	4
15.00	60.00	-4.61	0.09	-1.94	-0.75	4	15.00	60.00	0.19	-4.06	-7.61	0.49	4
15.00	70.00	-8.03	-0.18	-1.05	1.00	4	15.00	70.00	0.58	-2.27	-9.81	-0.63	4
15.00	80.00	-13.48	-0.77	-0.46	2.28	4	15.00	80.00	0.65	-1.44	-11.86	-2.33	4
15.00	90.00	-17.06	-1.82	-0.27	2.56	4	15.00	90.00	0.30	-1.20	-14.69	-4.95	4
15.00	100.00	-9.97	-2.91	0.10	2.43	4	15.00	100.00	-0.62	-1.46	-22.89	-7.88	4
15.00	110.00	-5.50	-4.30	-0.30	2.00	4	15.00	110.00	-2.04	-1.63	-12.08	-11.91	4
15.00	120.00	-3.22	-6.49	-0.58	1.38	4	15.00	120.00	-4.11	-1.51	-7.09	-12.58	4
15.00	130.00	-2.16	-9.59	-1.09	0.70	4	15.00	130.00	-7.00	-1.60	-4.29	-8.92	4
15.00	140.00	-1.80	-13.89	-1.83	-0.14	4	15.00	140.00	-10.55	-1.60	-2.44	-5.49	4

15.00	150.00	-1.87	-15.17	-3.33	-0.96	4	15.00	150.00	-12.20	-1.87	-0.97	-2.95	4
15.00	160.00	-2.39	-10.13	-5.19	-2.10	4	15.00	160.00	-10.17	-2.30	0.08	-1.36	4
15.00	170.00	-3.13	-6.16	-7.07	-4.37	4	15.00	170.00	-7.99	-3.17	0.49	-0.51	4
15.00	180.00	-3.94	-3.72	-8.95	-7.86	4	15.00	180.00	-6.10	-4.10	0.89	-0.27	4
15.00	190.00	-5.03	-2.12	-8.93	-13.27	4	15.00	190.00	-4.84	-5.96	0.89	-0.39	4
15.00	200.00	-6.79	-1.09	-7.88	-19.59	4	15.00	200.00	-3.78	-9.13	0.54	-0.85	4
15.00	210.00	-9.23	-0.41	-5.89	-18.62	4	15.00	210.00	-2.81	-15.01	-0.30	-1.56	4
15.00	220.00	-12.96	-0.12	-3.66	-15.24	4	15.00	220.00	-2.34	-25.61	-0.70	-2.39	4
15.00	230.00	-19.25	0.19	-1.30	-11.65	4	15.00	230.00	-2.09	-13.81	-1.34	-2.79	4
15.00	240.00	-16.99	0.07	0.28	-8.33	4	15.00	240.00	-2.04	-7.99	-2.63	-3.53	4
15.00	250.00	-11.22	-0.12	1.18	-5.00	4	15.00	250.00	-2.42	-4.75	-5.14	-4.93	4
15.00	260.00	-7.39	-0.65	1.53	-3.37	4	15.00	260.00	-3.36	-2.29	-9.05	-7.30	4
15.00	270.00	-4.98	-1.50	2.00	-2.33	4	15.00	270.00	-5.59	-0.40	-16.82	-10.48	4
15.00	280.00	-3.83	-3.09	2.20	-1.42	4	15.00	280.00	-8.67	1.10	-13.50	-17.79	4
15.00	290.00	-3.38	-5.36	2.14	-0.22	4	15.00	290.00	-10.21	1.96	-9.50	-23.25	4
15.00	300.00	-3.35	-8.30	1.48	0.46	4	15.00	300.00	-8.43	2.38	-6.59	-12.94	4
15.00	310.00	-3.05	-11.90	0.86	0.80	4	15.00	310.00	-6.44	2.35	-4.15	-7.46	4
15.00	320.00	-2.25	-11.98	-0.47	0.90	4	15.00	320.00	-5.45	1.84	-2.53	-3.69	4
15.00	330.00	-1.38	-9.27	-2.42	0.55	4	15.00	330.00	-5.32	1.02	-1.57	-0.74	4
15.00	340.00	-0.67	-7.36	-4.90	-0.19	4	15.00	340.00	-5.91	0.26	-0.99	0.93	4
15.00	350.00	-0.49	-6.54	-6.57	-0.99	4	15.00	350.00	-6.39	-0.20	-0.77	1.42	4
30.00	0.00	2.51	-6.08	-13.31	-13.55	4	30.00	0.00	-3.87	-3.65	0.42	-2.23	4
30.00	10.00	2.58	-6.02	-18.92	-16.01	4	30.00	10.00	-3.85	-3.99	0.12	-2.72	4
30.00	20.00	2.56	-5.57	-15.09	-12.23	4	30.00	20.00	-3.35	-4.19	-0.69	-3.23	4
30.00	30.00	2.00	-4.44	-7.84	-7.32	4	30.00	30.00	-2.80	-5.00	-2.03	-3.45	4
30.00	40.00	1.12	-4.17	-4.97	-4.42	4	30.00	40.00	-2.13	-8.57	-4.76	-4.01	4
30.00	50.00	-0.38	-4.73	-4.22	-3.22	4	30.00	50.00	-0.91	-10.70	-9.31	-4.67	4
30.00	60.00	-2.88	-4.94	-5.17	-1.74	4	30.00	60.00	0.29	-6.71	-14.04	-3.73	4
30.00	70.00	-7.42	-4.04	-5.38	0.26	4	30.00	70.00	0.95	-4.13	-14.16	-3.45	4
30.00	80.00	-14.28	-3.00	-4.28	1.32	4	30.00	80.00	0.54	-2.22	-15.06	-4.87	4
30.00	90.00	-40.21	-2.90	-2.84	1.63	4	30.00	90.00	-0.92	-1.57	-17.86	-5.96	4
30.00	100.00	-17.14	-4.17	-2.36	1.74	4	30.00	100.00	-2.06	-1.56	-23.58	-6.39	4
30.00	110.00	-12.59	-5.90	-2.28	1.43	4	30.00	110.00	-2.88	-2.11	-14.76	-7.18	4
30.00	120.00	-8.16	-7.29	-2.68	1.33	4	30.00	120.00	-3.56	-3.58	-8.84	-10.37	4
30.00	130.00	-5.33	-7.51	-3.03	1.35	4	30.00	130.00	-5.40	-5.88	-4.93	-7.02	4
30.00	140.00	-4.29	-7.56	-5.17	0.85	4	30.00	140.00	-8.62	-6.27	-4.51	-4.36	4
30.00	150.00	-4.37	-8.38	-7.36	-0.68	4	30.00	150.00	-12.87	-5.91	-3.78	-3.25	4
30.00	160.00	-5.16	-10.21	-9.46	-2.80	4	30.00	160.00	-15.66	-4.76	-3.69	-2.71	4
30.00	170.00	-6.09	-10.47	-11.03	-5.61	4	30.00	170.00	-15.16	-3.69	-3.28	-2.51	4
30.00	180.00	-5.78	-8.31	-10.27	-9.16	4	30.00	180.00	-12.29	-3.65	-2.80	-2.29	4
30.00	190.00	-4.84	-5.75	-8.30	-14.82	4	30.00	190.00	-8.76	-5.49	-2.31	-1.92	4
30.00	200.00	-4.78	-3.31	-6.62	-27.96	4	30.00	200.00	-5.36	-9.51	-1.87	-2.03	4
30.00	210.00	-5.79	-2.39	-5.39	-24.37	4	30.00	210.00	-2.56	-12.61	-1.51	-2.83	4
30.00	220.00	-7.53	-2.36	-3.69	-16.29	4	30.00	220.00	-0.26	-11.95	-1.79	-3.75	4
30.00	230.00	-9.77	-2.62	-3.01	-11.55	4	30.00	230.00	0.78	-8.87	-2.39	-4.63	4
30.00	240.00	-14.67	-2.96	-2.17	-8.84	4	30.00	240.00	0.76	-6.41	-3.41	-6.33	4
30.00	250.00	-20.41	-3.49	-0.40	-8.37	4	30.00	250.00	0.14	-5.86	-4.53	-6.76	4
30.00	260.00	-12.61	-3.69	1.01	-10.27	4	30.00	260.00	-0.82	-5.39	-6.51	-6.14	4
30.00	270.00	-7.44	-3.93	1.83	-8.77	4	30.00	270.00	-1.92	-3.46	-10.92	-8.72	4
30.00	280.00	-4.02	-4.67	2.75	-7.18	4	30.00	280.00	-3.46	-1.07	-29.59	-18.13	4
30.00	290.00	-2.46	-6.63	3.13	-8.73	4	30.00	290.00	-7.09	1.07	-11.35	-14.77	4
30.00	300.00	-1.81	-10.21	2.56	-12.39	4	30.00	300.00	-14.48	1.95	-7.46	-14.08	4
30.00	310.00	-1.44	-13.68	1.73	-12.36	4	30.00	310.00	-15.51	1.58	-5.52	-15.47	4
30.00	320.00	-1.23	-12.83	0.82	-6.86	4	30.00	320.00	-10.03	0.85	-3.37	-12.94	4
30.00	330.00	-0.64	-10.48	-0.45	-4.29	4	30.00	330.00	-6.88	0.02	-1.78	-7.26	4
30.00	340.00	0.12	-8.74	-1.94	-4.88	4	30.00	340.00	-5.17	-1.18	-0.50	-2.96	4

30.00	350.00	1.11	-7.87	-3.95	-8.60	4	30.00	350.00	-4.50	-2.22	0.41	-1.16	4
45.00	0.00	0.99	-10.96	-11.40	-9.45	4	45.00	0.00	-12.55	-1.25	-1.45	-12.85	4
45.00	10.00	2.06	-11.97	-32.03	-7.32	4	45.00	10.00	-10.52	-2.22	-1.50	-13.06	4
45.00	20.00	2.47	-12.06	-14.83	-6.71	4	45.00	20.00	-4.90	-3.74	-2.84	-4.62	4
45.00	30.00	2.13	-12.14	-10.34	-4.43	4	45.00	30.00	-1.15	-5.79	-6.44	-1.57	4
45.00	40.00	0.04	-11.88	-6.14	-2.45	4	45.00	40.00	0.39	-6.53	-11.47	-1.52	4
45.00	50.00	-4.16	-9.59	-4.46	-1.71	4	45.00	50.00	0.06	-6.50	-19.57	-1.48	4
45.00	60.00	-10.95	-7.62	-5.31	0.21	4	45.00	60.00	-0.94	-6.18	-14.38	-0.60	4
45.00	70.00	-15.92	-7.74	-6.63	2.10	4	45.00	70.00	-0.89	-7.52	-13.43	-2.23	4
45.00	80.00	-19.07	-8.47	-5.19	1.54	4	45.00	80.00	-1.67	-4.78	-19.95	-6.18	4
45.00	90.00	-26.62	-7.54	-4.78	1.97	4	45.00	90.00	-4.16	-3.32	-21.62	-8.75	4
45.00	100.00	-11.39	-7.58	-5.18	2.67	4	45.00	100.00	-5.60	-1.80	-13.65	-12.67	4
45.00	110.00	-7.39	-8.03	-5.85	1.67	4	45.00	110.00	-5.91	-2.42	-10.97	-14.63	4
45.00	120.00	-7.49	-7.56	-5.60	1.41	4	45.00	120.00	-8.40	-3.44	-9.68	-13.75	4
45.00	130.00	-7.05	-7.40	-6.41	1.49	4	45.00	130.00	-11.68	-6.22	-7.57	-8.32	4
45.00	140.00	-6.39	-7.89	-8.61	0.59	4	45.00	140.00	-13.38	-7.26	-5.15	-4.73	4
45.00	150.00	-6.02	-9.55	-10.68	-0.72	4	45.00	150.00	-15.62	-5.48	-2.78	-3.68	4
45.00	160.00	-5.51	-14.25	-11.76	-2.36	4	45.00	160.00	-21.55	-4.12	-0.79	-3.34	4
45.00	170.00	-4.51	-19.59	-10.10	-4.52	4	45.00	170.00	-22.57	-4.33	-0.08	-2.55	4
45.00	180.00	-3.21	-12.99	-7.05	-7.16	4	45.00	180.00	-10.25	-6.39	-0.15	-1.93	4
45.00	190.00	-2.90	-11.00	-4.85	-10.95	4	45.00	190.00	-5.29	-10.81	-0.53	-2.35	4
45.00	200.00	-2.49	-10.04	-3.56	-15.03	4	45.00	200.00	-2.72	-15.49	-1.17	-3.81	4
45.00	210.00	-2.32	-8.39	-2.64	-17.26	4	45.00	210.00	-1.13	-19.61	-2.60	-4.57	4
45.00	220.00	-3.22	-7.35	-1.92	-13.08	4	45.00	220.00	0.00	-11.38	-3.66	-3.34	4
45.00	230.00	-6.57	-9.84	-1.28	-9.72	4	45.00	230.00	0.97	-7.95	-3.84	-3.09	4
45.00	240.00	-13.26	-11.92	-0.32	-8.13	4	45.00	240.00	1.79	-7.44	-4.89	-6.98	4
45.00	250.00	-11.07	-8.62	0.97	-7.73	4	45.00	250.00	2.11	-6.03	-7.54	-18.47	4
45.00	260.00	-7.53	-7.57	2.08	-6.94	4	45.00	260.00	0.80	-5.17	-13.75	-16.26	4
45.00	270.00	-7.33	-8.47	2.72	-7.34	4	45.00	270.00	-2.25	-3.22	-19.26	-17.05	4
45.00	280.00	-6.42	-10.28	2.77	-8.69	4	45.00	280.00	-5.28	-0.53	-17.96	-11.40	4
45.00	290.00	-4.94	-10.25	2.38	-13.83	4	45.00	290.00	-9.60	1.50	-9.25	-15.57	4
45.00	300.00	-4.67	-9.04	1.89	-24.78	4	45.00	300.00	-17.76	1.45	-8.74	-16.88	4
45.00	310.00	-4.38	-8.89	1.17	-14.00	4	45.00	310.00	-14.81	0.22	-7.41	-14.12	4
45.00	320.00	-3.60	-10.28	0.15	-7.76	4	45.00	320.00	-14.24	-0.75	-4.87	-25.91	4
45.00	330.00	-2.94	-12.72	-1.85	-7.99	4	45.00	330.00	-12.14	-0.93	-4.29	-9.38	4
45.00	340.00	-2.19	-13.42	-3.34	-11.53	4	45.00	340.00	-10.31	-0.62	-3.45	-6.72	4
45.00	350.00	-1.82	-13.92	-4.07	-14.75	4	45.00	350.00	-9.21	-0.55	-3.03	-6.26	4
60.00	0.00	-0.23	-10.36	-6.69	-16.59	4	60.00	0.00	-11.79	-0.91	-2.76	-5.90	4
60.00	10.00	-0.15	-10.43	-9.45	-19.62	4	60.00	10.00	-10.75	-1.55	-3.15	-6.35	4
60.00	20.00	0.64	-11.33	-21.19	-19.24	4	60.00	20.00	-10.00	-3.14	-5.34	-7.18	4
60.00	30.00	1.36	-11.66	-13.63	-13.72	4	60.00	30.00	-7.57	-6.24	-10.05	-4.52	4
60.00	40.00	0.41	-11.73	-7.58	-8.05	4	60.00	40.00	-3.56	-8.48	-17.26	-0.82	4
60.00	50.00	-2.43	-11.86	-6.61	-3.68	4	60.00	50.00	-1.39	-9.78	-10.09	-0.41	4
60.00	60.00	-4.15	-12.60	-6.87	-1.94	4	60.00	60.00	-1.91	-13.89	-9.47	-2.12	4
60.00	70.00	-7.54	-13.96	-6.31	-1.70	4	60.00	70.00	-1.64	-12.71	-10.91	-2.32	4
60.00	80.00	-13.24	-21.80	-4.09	-0.16	4	60.00	80.00	-2.59	-8.28	-16.57	-4.18	4
60.00	90.00	-7.85	-14.78	-4.20	0.66	4	60.00	90.00	-5.41	-11.57	-29.24	-6.67	4
60.00	100.00	-9.48	-9.40	-5.65	0.17	4	60.00	100.00	-6.55	-10.17	-17.04	-9.76	4
60.00	110.00	-16.74	-8.36	-6.03	0.95	4	60.00	110.00	-7.61	-6.61	-13.56	-9.66	4
60.00	120.00	-12.19	-9.19	-5.14	-0.05	4	60.00	120.00	-9.44	-5.68	-12.19	-9.56	4
60.00	130.00	-8.10	-10.40	-4.51	0.59	4	60.00	130.00	-6.58	-4.82	-7.89	-8.24	4
60.00	140.00	-5.72	-10.11	-5.15	1.54	4	60.00	140.00	-5.94	-5.91	-6.80	-4.27	4
60.00	150.00	-6.87	-7.07	-8.01	0.25	4	60.00	150.00	-7.30	-6.12	-6.23	-0.68	4
60.00	160.00	-9.56	-7.45	-10.40	-1.32	4	60.00	160.00	-8.97	-2.68	-5.07	-0.10	4
60.00	170.00	-10.77	-9.13	-10.24	-2.62	4	60.00	170.00	-13.25	-2.03	-3.79	-0.11	4
60.00	180.00	-11.59	-7.24	-8.93	-3.70	4	60.00	180.00	-17.92	-3.23	-3.95	-0.18	4

60.00	190.00	-10.15	-5.41	-6.55	-4.95	4	60.00	190.00	-9.39	-7.82	-4.97	0.15	4
60.00	200.00	-7.17	-5.96	-4.02	-7.20	4	60.00	200.00	-4.92	-19.44	-5.51	0.19	4
60.00	210.00	-4.87	-7.00	-1.56	-9.53	4	60.00	210.00	-2.62	-15.17	-7.45	-0.15	4
60.00	220.00	-2.76	-7.51	-0.27	-11.65	4	60.00	220.00	-0.19	-7.14	-10.43	-1.07	4
60.00	230.00	-2.50	-8.63	0.42	-13.34	4	60.00	230.00	1.41	-4.41	-11.02	-1.88	4
60.00	240.00	-4.09	-13.75	0.41	-16.36	4	60.00	240.00	1.38	-4.16	-9.47	-2.09	4
60.00	250.00	-5.32	-32.05	0.34	-15.14	4	60.00	250.00	1.03	-5.36	-7.41	-4.82	4
60.00	260.00	-6.09	-19.65	2.22	-15.52	4	60.00	260.00	0.66	-5.58	-9.09	-11.16	4
60.00	270.00	-9.24	-10.82	3.36	-18.40	4	60.00	270.00	-1.91	-7.34	-21.05	-17.02	4
60.00	280.00	-7.50	-10.30	1.77	-15.98	4	60.00	280.00	-4.52	-4.10	-23.23	-21.24	4
60.00	290.00	-5.94	-10.03	0.42	-10.29	4	60.00	290.00	-7.90	0.34	-10.66	-16.66	4
60.00	300.00	-6.75	-9.75	-0.61	-8.63	4	60.00	300.00	-8.62	1.98	-10.61	-10.95	4
60.00	310.00	-7.37	-11.56	0.52	-8.00	4	60.00	310.00	-9.21	1.94	-10.53	-10.39	4
60.00	320.00	-7.78	-18.12	0.35	-13.64	4	60.00	320.00	-10.88	1.12	-7.97	-8.52	4
60.00	330.00	-7.94	-17.53	-1.54	-18.54	4	60.00	330.00	-10.50	1.43	-5.26	-12.02	4
60.00	340.00	-4.99	-13.71	-2.99	-25.64	4	60.00	340.00	-11.63	1.85	-6.58	-14.43	4
60.00	350.00	-2.14	-10.43	-2.74	-23.26	4	60.00	350.00	-14.10	2.00	-6.84	-8.35	4
75.00	0.00	0.42	-12.14	-5.71	-23.46	4	75.00	0.00	-12.98	-1.96	-2.49	-8.42	4
75.00	10.00	-1.27	-16.67	-10.48	-20.66	4	75.00	10.00	-9.72	-4.45	-4.36	-6.58	4
75.00	20.00	-0.37	-23.91	-18.26	-22.98	4	75.00	20.00	-8.84	-6.78	-13.51	-2.29	4
75.00	30.00	0.32	-20.61	-13.46	-13.91	4	75.00	30.00	-9.18	-9.71	-12.6	-0.45	4
75.00	40.00	-2.34	-14.69	-10.4	-8.75	4	75.00	40.00	-4.69	-12.89	-7.03	-1.69	4
75.00	50.00	-7.58	-13.90	-8.38	-7.27	4	75.00	50.00	-3.08	-15.39	-7.73	-2.48	4
75.00	60.00	-3.41	-17.24	-11.12	-1.23	4	75.00	60.00	-3.04	-9.78	-9.58	-4.20	4
75.00	70.00	-4.99	-17.52	-7.66	0.12	4	75.00	70.00	-3.71	-8.92	-21.04	-7.19	4
75.00	80.00	-9.82	-22.11	-8.52	1.45	4	75.00	80.00	-4.95	-11.27	-17.22	-8.59	4
75.00	90.00	-12.67	-11.38	-8.87	1.64	4	75.00	90.00	-4.72	-8.08	-13.09	-9.78	4
75.00	100.00	-10.92	-7.21	-6.48	3.29	4	75.00	100.00	-9.21	-5.47	-11.75	-9.79	4
75.00	110.00	-10.5	-7.01	-5.01	1.81	4	75.00	110.00	-8.67	-3.13	-18.35	-6.38	4
75.00	120.00	-14.19	-7.48	-5.20	1.68	4	75.00	120.00	-6.49	-1.27	-11.60	-7.52	4
75.00	130.00	-17.99	-10.91	-6.05	2.01	4	75.00	130.00	-7.42	-3.43	-6.01	-5.90	4
75.00	140.00	-13.87	-8.62	-5.30	1.19	4	75.00	140.00	-9.24	-5.99	-4.26	-6.28	4
75.00	150.00	-10.07	-9.64	-4.89	0.57	4	75.00	150.00	-9.47	-3.79	-3.08	-5.66	4
75.00	160.00	-7.56	-17.67	-5.38	-0.54	4	75.00	160.00	-10.20	-3.24	-3.46	-3.96	4
75.00	170.00	-7.20	-15.85	-5.62	-1.59	4	75.00	170.00	-9.41	-3.92	-4.27	-2.21	4
75.00	180.00	-11.52	-11.72	-5.42	-2.42	4	75.00	180.00	-6.21	-7.54	-3.58	-1.55	4
75.00	190.00	-18.37	-11.05	-4.13	-3.04	4	75.00	190.00	-2.30	-14.34	-3.01	-1.83	4
75.00	200.00	-5.60	-11.88	-2.35	-3.23	4	75.00	200.00	-0.44	-8.84	-3.77	-2.17	4
75.00	210.00	-2.58	-13.05	-0.87	-3.27	4	75.00	210.00	-0.75	-4.87	-5.70	-2.68	4
75.00	220.00	-3.04	-12.71	0.38	-3.68	4	75.00	220.00	-2.02	-2.42	-10.97	-3.37	4
75.00	230.00	-4.98	-14.59	1.46	-5.58	4	75.00	230.00	-3.22	-0.99	-17.44	-3.24	4
75.00	240.00	-5.66	-13.52	1.15	-6.90	4	75.00	240.00	-2.10	-1.07	-17.78	-3.77	4
75.00	250.00	-6.15	-12.01	-0.06	-7.09	4	75.00	250.00	-2.05	-1.47	-24.49	-6.27	4
75.00	260.00	-10.23	-9.36	0.18	-11.06	4	75.00	260.00	-2.87	-3.79	-16.21	-12.32	4
75.00	270.00	-11.18	-10.47	0.54	-11.53	4	75.00	270.00	-3.12	-1.83	-16.42	-24.98	4
75.00	280.00	-7.89	-12.57	1.51	-9.94	4	75.00	280.00	-5.40	0.98	-18.07	-14.14	4
75.00	290.00	-7.24	-17.37	1.43	-11.63	4	75.00	290.00	-6.79	2.21	-11.90	-11.11	4
75.00	300.00	-3.96	-29.60	-0.30	-20.25	4	75.00	300.00	-8.96	1.50	-11.12	-8.71	4
75.00	310.00	-2.63	-18.10	0.14	-11.24	4	75.00	310.00	-9.07	1.45	-8.74	-5.96	4
75.00	320.00	-4.89	-14.35	-2.41	-17.14	4	75.00	320.00	-5.54	2.24	-4.49	-4.93	4
75.00	330.00	-1.95	-10.43	-6.16	-12.67	4	75.00	330.00	-6.27	2.79	-5.44	-7.21	4
75.00	340.00	1.40	-10.23	-5.53	-15.08	4	75.00	340.00	-9.70	2.55	-9.21	-14.24	4
75.00	350.00	2.26	-11.09	-4.63	-17.79	4	75.00	350.00	-13.23	1.80	-8.90	-15.23	4
90.00	0.00	0.54	-15.68	-10.16	-18.68	4	90.00	0.00	-14.96	-3.71	-4.76	-4.47	4
90.00	10.00	-1.77	-16.67	-11.25	-17.22	4	90.00	10.00	-14.64	-4.57	-4.13	-5.91	4
90.00	20.00	-5.12	-21.43	-12.51	-11.22	4	90.00	20.00	-12.14	-5.79	-6.45	-6.44	4

90.00	30.00	-1.94	-14.81	-13.51	-9.83	4	90.00	30.00	-9.68	-6.51	-17.27	-3.45	4
90.00	40.00	0.47	-12.67	-9.51	-8.00	4	90.00	40.00	-10.37	-4.70	-6.06	-4.02	4
90.00	50.00	-1.23	-13.40	-11.81	-4.89	4	90.00	50.00	-8.02	-4.33	-7.81	-9.41	4
90.00	60.00	-3.46	-11.53	-9.83	-4.91	4	90.00	60.00	-5	-7.48	-11.63	-9.27	4
90.00	70.00	-2.33	-10.94	-13.45	-0.60	4	90.00	70.00	-4.91	-11.69	-7.87	-13.83	4
90.00	80.00	-5.77	-11.41	-7.94	0.02	4	90.00	80.00	-3.03	-10.45	-21.2	-6.35	4
90.00	90.00	-9.14	-14.45	-5.47	0.80	4	90.00	90.00	-1.82	-5.40	-14.01	-10.94	4
90.00	100.00	-8.8	-12.55	-1.63	1.28	4	90.00	100.00	-3.27	-2.48	-11.43	-17.92	4
90.00	110.00	-7.27	-15.30	-2.62	1.89	4	90.00	110.00	-4.79	-2.09	-20.36	-24.10	4
90.00	120.00	-5.78	-11.27	-3.20	1.88	4	90.00	120.00	-7.52	-2.82	-17.09	-28.04	4
90.00	130.00	-7.43	-15.12	-3.69	1.80	4	90.00	130.00	-11.01	-2.02	-10.60	-10.72	4
90.00	140.00	-7.99	-15.04	-3.11	-0.06	4	90.00	140.00	-7.19	-1.65	-4.46	-19.83	4
90.00	150.00	-6.49	-13.13	-3.46	-0.86	4	90.00	150.00	-5.26	-3.61	-1.36	-15.54	4
90.00	160.00	-4.93	-23.06	-4.43	0.33	4	90.00	160.00	-7.08	-7.97	-2.58	-6.03	4
90.00	170.00	-5.18	-15.36	-3.94	-0.26	4	90.00	170.00	-10.99	-11.00	-5.38	-4.92	4
90.00	180.00	-8.90	-8.95	-2.86	-2.32	4	90.00	180.00	-14.45	-13.16	-8.13	-4.89	4
90.00	190.00	-15.88	-8.33	-1.91	-3.09	4	90.00	190.00	-10.07	-13.59	-8.12	-3.42	4
90.00	200.00	-6.77	-11.22	-1.06	-3.10	4	90.00	200.00	-6.55	-11.98	-6.53	-3.30	4
90.00	210.00	-1.69	-12.99	-0.46	-3.35	4	90.00	210.00	-3.62	-8.72	-5.12	-2.68	4
90.00	220.00	-0.39	-10.40	-0.15	-2.25	4	90.00	220.00	-2.27	-4.56	-3.77	-2.60	4
90.00	230.00	-0.93	-8.93	0.37	-1.56	4	90.00	230.00	-3.77	-2.94	-6.08	-2.64	4
90.00	240.00	-2.16	-6.81	0.81	-1.67	4	90.00	240.00	-7.14	-0.93	-12.29	-3.78	4
90.00	250.00	-2.85	-6.06	-0.50	-1.79	4	90.00	250.00	-4.64	0.59	-11.61	-7.71	4
90.00	260.00	-3.99	-7.80	-1.86	-3.62	4	90.00	260.00	-3.70	0.36	-10.56	-12.07	4
90.00	270.00	-5.49	-11.29	-1.09	-5.35	4	90.00	270.00	-2.80	0.87	-16.64	-15.42	4
90.00	280.00	-3.09	-13.50	-0.60	-7.98	4	90.00	280.00	-3.75	2.58	-13.60	-32.02	4
90.00	290.00	-2.23	-10.82	0.91	-11.21	4	90.00	290.00	-4.28	3.16	-11.51	-15.46	4
90.00	300.00	-2.57	-16.99	-0.21	-29.23	4	90.00	300.00	-6.92	2.59	-7.86	-14.30	4
90.00	310.00	-0.55	-10.28	-1.62	-30.58	4	90.00	310.00	-10.13	2.39	-11.50	-10.31	4
90.00	320.00	-1.76	-6.02	-2.47	-14.06	4	90.00	320.00	-8.28	3.14	-14.23	-11.47	4
90.00	330.00	-4.03	-7.86	-5.02	-11.93	4	90.00	330.00	-11.33	2.71	-8.97	-9.13	4
90.00	340.00	0.55	-14.55	-8.75	-13.38	4	90.00	340.00	-19.58	1.50	-8.01	-18.34	4
90.00	350.00	3.35	-20.91	-9.67	-14.86	4	90.00	350.00	-23.79	-0.25	-11.02	-9.60	4
105.00	0.00	-2.40	-12.67	-17.37	-21.16	4	105.00	0.00	-14.87	-6.53	-11.67	-11.11	4
105.00	10.00	-12.86	-11.91	-17.47	-13.09	4	105.00	10.00	-10.48	-5.29	-11.82	-8.97	4
105.00	20.00	-4.77	-11.44	-35.19	-8.53	4	105.00	20.00	-6.60	-4.64	-20.68	-12.56	4
105.00	30.00	0.45	-9.99	-13.31	-6.42	4	105.00	30.00	-5.14	-2.39	-11.41	-9.37	4
105.00	40.00	-0.02	-10.75	-9.98	-5.58	4	105.00	40.00	-5.31	-2.63	-7.38	-7.42	4
105.00	50.00	-2.95	-10.97	-20.72	-6.36	4	105.00	50.00	-2.80	-6.08	-12.62	-9.80	4
105.00	60.00	-1.93	-10.98	-7.62	-5.21	4	105.00	60.00	-3.71	-8.58	-9.63	-25.47	4
105.00	70.00	-3.45	-9.64	-5.46	-1.07	4	105.00	70.00	-4.54	-3.94	-10.86	-7.77	4
105.00	80.00	-6.05	-10.04	-2.81	-0.23	4	105.00	80.00	-2.05	-3.42	-36.13	-8.28	4
105.00	90.00	-4.35	-11.54	-2.87	1.27	4	105.00	90.00	-2.38	-2.09	-19.39	-17.37	4
105.00	100.00	-5.14	-9.22	-2.57	0.41	4	105.00	100.00	-2.54	-3.79	-19.74	-25.76	4
105.00	110.00	-7.76	-12.29	-2.33	2.56	4	105.00	110.00	-4.98	-3.26	-10.33	-19.42	4
105.00	120.00	-10.97	-24.30	-0.95	0.79	4	105.00	120.00	-10.54	-2.90	-10.06	-24.02	4
105.00	130.00	-4.91	-17.59	-0.85	0.71	4	105.00	130.00	-11.27	-1.00	-7.43	-10.46	4
105.00	140.00	-1.52	-10.06	-1.56	0.84	4	105.00	140.00	-10.42	-1.33	-6.33	-10.53	4
105.00	150.00	-0.49	-10.77	-2.47	-0.05	4	105.00	150.00	-13.38	-5.11	-6.68	-9.02	4
105.00	160.00	-1.37	-15.60	-2.70	-0.48	4	105.00	160.00	-23.16	-13.41	-7.40	-7.68	4
105.00	170.00	-4.61	-7.11	-2.81	-1.26	4	105.00	170.00	-13.85	-22.36	-7.94	-6.87	4
105.00	180.00	-14.27	-3.07	-2.75	-1.81	4	105.00	180.00	-18.53	-11.22	-9.85	-5.89	4
105.00	190.00	-11.72	-2.64	-2.54	-1.59	4	105.00	190.00	-18.18	-10.11	-18.43	-4.26	4
105.00	200.00	-4.02	-4.77	-2.52	-1.26	4	105.00	200.00	-12.86	-11.98	-24.42	-3.74	4
105.00	210.00	-2.03	-6.94	-2.10	-0.84	4	105.00	210.00	-9.84	-7.51	-12.74	-4.19	4
105.00	220.00	-1.80	-5.36	-0.31	-1.04	4	105.00	220.00	-10.39	-3.93	-7.25	-4.32	4

105.00	230.00	-2.45	-4.20	1.19	-1.58	4	105.00	230.00	-13.50	-2.07	-4.62	-5.52	4
105.00	240.00	-4.74	-3.93	1.75	-1.40	4	105.00	240.00	-8.63	-0.86	-9.56	-10.46	4
105.00	250.00	-6.09	-7.38	0.32	-3.07	4	105.00	250.00	-6.30	0.27	-20.18	-9.17	4
105.00	260.00	-5.90	-18.32	-1.13	-6.43	4	105.00	260.00	-5.82	0.88	-13.76	-11.27	4
105.00	270.00	-4.60	-30.20	-2.89	-5.10	4	105.00	270.00	-5.55	1.92	-17.07	-12.72	4
105.00	280.00	-4.59	-21.35	-0.91	-4.62	4	105.00	280.00	-6.17	2.38	-12.35	-30.45	4
105.00	290.00	-5.20	-17.77	1.04	-9.67	4	105.00	290.00	-6.11	1.92	-15.15	-18.58	4
105.00	300.00	-2.20	-20.86	-0.16	-13.90	4	105.00	300.00	-8.04	2.40	-12.92	-13.43	4
105.00	310.00	-2.60	-7.25	-1.65	-15.78	4	105.00	310.00	-10.47	3.63	-10.08	-18.14	4
105.00	320.00	-4.17	-6.51	-2.91	-12.86	4	105.00	320.00	-17.83	3.52	-13.63	-18.94	4
105.00	330.00	-1.06	-13.03	-3.82	-15.47	4	105.00	330.00	-34.52	1.56	-14.80	-10.89	4
105.00	340.00	1.26	-23.68	-6.56	-13.43	4	105.00	340.00	-29.15	-0.87	-15.21	-10.41	4
105.00	350.00	1.55	-32.18	-9.17	-14.95	4	105.00	350.00	-24.61	-1.71	-17.21	-10.74	4
120.00	0.00	-5.49	-20.49	-11.47	-16.77	4	120.00	0.00	-6.36	-4.61	-17.27	-7.90	4
120.00	10.00	-11.26	-17.53	-11.11	-12.42	4	120.00	10.00	-4.35	-4.15	-13.70	-8.12	4
120.00	20.00	-11.71	-17.34	-10.48	-8.46	4	120.00	20.00	-2.63	-4.06	-13.02	-5.57	4
120.00	30.00	-2.38	-10.79	-15.72	-7.60	4	120.00	30.00	-1.74	-4.79	-24.94	-3.76	4
120.00	40.00	-0.01	-6.87	-11.62	-7.89	4	120.00	40.00	-1.12	-5.61	-16.09	-3.30	4
120.00	50.00	-2.49	-5.17	-6.39	-8.44	4	120.00	50.00	-1.25	-5.07	-9.34	-5.22	4
120.00	60.00	-9.66	-4.52	-6.62	-6.79	4	120.00	60.00	-0.86	-5.30	-11.96	-14.34	4
120.00	70.00	-9.66	-4.20	-5.78	-3.99	4	120.00	70.00	-1.82	-7.44	-15.15	-17.67	4
120.00	80.00	-7.07	-6.34	-2.89	-1.99	4	120.00	80.00	-1.72	-6.95	-13.13	-11.52	4
120.00	90.00	-5.83	-7.54	-2.09	-0.03	4	120.00	90.00	-0.75	-4.68	-12.87	-16.65	4
120.00	100.00	-4.11	-5.69	-0.96	1.09	4	120.00	100.00	-1.75	-4.30	-15.59	-24.04	4
120.00	110.00	-5.30	-6.56	-1.97	-0.78	4	120.00	110.00	-2.95	-2.55	-20.97	-14.98	4
120.00	120.00	-9.57	-5.97	-3.07	-0.78	4	120.00	120.00	-5.13	-2.49	-24.40	-10.62	4
120.00	130.00	-8.14	-9.84	-2.10	-1.65	4	120.00	130.00	-4.98	-7.62	-16.60	-13.35	4
120.00	140.00	-3.14	-19.46	-3.80	-1.36	4	120.00	140.00	-7.39	-3.33	-4.16	-19.51	4
120.00	150.00	-0.52	-9.54	-5.32	-1.15	4	120.00	150.00	-17.34	-1.51	-2.12	-19.05	4
120.00	160.00	-0.14	-8.59	-4.64	-2.41	4	120.00	160.00	-9.60	-4.06	-2.73	-15.60	4
120.00	170.00	-1.33	-11.48	-4.76	-3.05	4	120.00	170.00	-6.20	-6.39	-3.24	-12.20	4
120.00	180.00	-3.48	-19.29	-5.51	-2.80	4	120.00	180.00	-5.85	-5.10	-4.04	-9.73	4
120.00	190.00	-7.98	-14.36	-6.43	-3.56	4	120.00	190.00	-8.17	-4.28	-6.12	-7.40	4
120.00	200.00	-18.80	-9.11	-7.56	-4.66	4	120.00	200.00	-17.64	-6.44	-10.29	-6.68	4
120.00	210.00	-8.90	-11.68	-7.79	-5.55	4	120.00	210.00	-15.36	-13.07	-12.65	-9.59	4
120.00	220.00	-4.35	-23.08	-6.14	-4.61	4	120.00	220.00	-9.92	-13.88	-8.30	-10.44	4
120.00	230.00	-2.90	-9.83	-2.46	-2.93	4	120.00	230.00	-10.78	-7.98	-6.67	-7.52	4
120.00	240.00	-2.97	-11.34	0.29	-2.32	4	120.00	240.00	-10.44	-3.97	-7.84	-8.99	4
120.00	250.00	-3.50	-23.53	0.55	-2.31	4	120.00	250.00	-12.62	-1.11	-9.40	-13.66	4
120.00	260.00	-3.65	-9.83	-0.66	-1.65	4	120.00	260.00	-10.84	0.73	-8.44	-12.24	4
120.00	270.00	-3.38	-8.86	-1.66	-4.28	4	120.00	270.00	-10.49	1.50	-8.98	-15.50	4
120.00	280.00	-2.57	-9.15	-2.11	-11.53	4	120.00	280.00	-11.90	2.07	-17.76	-24.23	4
120.00	290.00	-2.73	-10.04	-0.98	-9.99	4	120.00	290.00	-8.97	2.19	-16.49	-18.79	4
120.00	300.00	-3.96	-8.12	-1.71	-6.60	4	120.00	300.00	-10.73	1.42	-13.13	-23.20	4
120.00	310.00	-5.16	-6.40	-3.65	-6.13	4	120.00	310.00	-10.75	0.73	-7.45	-21.57	4
120.00	320.00	-9.20	-7.73	-6.23	-8.36	4	120.00	320.00	-8.10	1.14	-7.53	-14.23	4
120.00	330.00	-7.55	-11.30	-5.90	-12.65	4	120.00	330.00	-8.52	0.74	-8.37	-12.73	4
120.00	340.00	-2.81	-7.37	-5.90	-21.92	4	120.00	340.00	-9.66	-0.73	-9.49	-8.18	4
120.00	350.00	-1.07	-6.75	-10.91	-17.34	4	120.00	350.00	-11.24	-1.49	-16.95	-5.94	4
135.00	0.00	-18.75	-6.10	-3.64	-13.72	4	135.00	0.00	-4.40	-2.64	-11.63	-7.89	4
135.00	10.00	-11.46	-9.78	-4.78	-13.70	4	135.00	10.00	-2.23	-2.43	-13.49	-6.06	4
135.00	20.00	-6.79	-17.16	-9.07	-12.79	4	135.00	20.00	-2.42	-4.24	-12.87	-6.85	4
135.00	30.00	-5.03	-6.64	-19.63	-9.70	4	135.00	30.00	-4.34	-7.95	-10.70	-9.65	4
135.00	40.00	-7.45	-5.01	-11.50	-9.66	4	135.00	40.00	-6.28	-8.70	-14.24	-13.23	4
135.00	50.00	-13.87	-5.91	-8.07	-8.40	4	135.00	50.00	-5.52	-7.26	-19.65	-15.58	4
135.00	60.00	-11.97	-6.16	-7.96	-6.58	4	135.00	60.00	-2.64	-8.88	-22.21	-12.84	4

135.00	70.00	-6.65	-6.33	-6.44	-5.38	4	135.00	70.00	-3.47	-12.84	-18.15	-13.79	4
135.00	80.00	-5.24	-6.43	-4.95	-5.30	4	135.00	80.00	-4.26	-18.67	-10.24	-10.19	4
135.00	90.00	-4.99	-3.48	-1.84	-3.43	4	135.00	90.00	-2.92	-9.03	-11.34	-14.06	4
135.00	100.00	-4.24	-1.56	-1.55	-4.55	4	135.00	100.00	-2.94	-5.42	-16.60	-21.35	4
135.00	110.00	-5.52	-3.46	-2.05	-5.54	4	135.00	110.00	-6.83	-3.32	-12.22	-9.14	4
135.00	120.00	-5.82	-9.14	-3.71	-3.59	4	135.00	120.00	-12.48	-4.79	-11.49	-4.86	4
135.00	130.00	-3.79	-13.61	-5.22	-3.43	4	135.00	130.00	-17.63	-6.60	-11.83	-7.19	4
135.00	140.00	-1.36	-12.09	-5.87	-4.14	4	135.00	140.00	-29.90	-6.97	-9.97	-10.90	4
135.00	150.00	0.33	-20.12	-6.70	-4.19	4	135.00	150.00	-15.17	-8.96	-7.03	-7.96	4
135.00	160.00	0.37	-15.42	-7.11	-3.39	4	135.00	160.00	-9.06	-7.11	-5.71	-5.52	4
135.00	170.00	-1.12	-11.11	-7.90	-3.33	4	135.00	170.00	-5.89	-4.88	-5.92	-4.90	4
135.00	180.00	-4.08	-10.66	-9.07	-3.23	4	135.00	180.00	-5.71	-3.83	-7.54	-4.60	4
135.00	190.00	-9.02	-11.56	-10.99	-3.20	4	135.00	190.00	-8.32	-4.34	-12.03	-5.54	4
135.00	200.00	-16.81	-11.78	-12.78	-2.80	4	135.00	200.00	-16.05	-5.02	-15.87	-7.64	4
135.00	210.00	-7.59	-8.87	-10.76	-2.38	4	135.00	210.00	-19.29	-7.13	-9.39	-8.49	4
135.00	220.00	-4.71	-5.06	-7.23	-2.43	4	135.00	220.00	-9.37	-8.97	-6.04	-7.86	4
135.00	230.00	-6.00	-4.07	-3.09	-2.47	4	135.00	230.00	-7.66	-7.04	-7.08	-7.57	4
135.00	240.00	-9.05	-4.50	-1.12	-1.64	4	135.00	240.00	-12.90	-3.63	-10.86	-5.58	4
135.00	250.00	-12.66	-4.75	-1.32	-1.39	4	135.00	250.00	-15.65	-0.95	-16.77	-4.75	4
135.00	260.00	-11.93	-6.25	-2.98	-2.45	4	135.00	260.00	-15.52	-0.51	-14.85	-8.69	4
135.00	270.00	-9.57	-9.64	-4.46	-5.29	4	135.00	270.00	-10.83	-3.07	-12.41	-20.11	4
135.00	280.00	-8.88	-10.35	-5.27	-7.05	4	135.00	280.00	-9.61	-2.11	-10.81	-27.28	4
135.00	290.00	-8.59	-7.94	-4.48	-5.72	4	135.00	290.00	-14.41	0.70	-14.24	-17.23	4
135.00	300.00	-8.50	-6.64	-5.78	-3.67	4	135.00	300.00	-12.52	1.30	-14.96	-13.00	4
135.00	310.00	-9.70	-6.70	-8.57	-3.87	4	135.00	310.00	-8.24	-0.29	-6.89	-14.87	4
135.00	320.00	-11.20	-7.10	-7.05	-6.97	4	135.00	320.00	-8.78	-2.12	-7.60	-13.87	4
135.00	330.00	-12.73	-7.71	-8.21	-16.03	4	135.00	330.00	-16.62	-1.55	-10.90	-10.20	4
135.00	340.00	-10.30	-10.51	-8.30	-19.88	4	135.00	340.00	-18.71	-2.06	-13.03	-9.43	4
135.00	350.00	-10.10	-14.07	-8.02	-17.20	4	135.00	350.00	-13.49	-3.24	-13.86	-9.66	4
150.00	0.00	-8.49	-10.90	-16.89	-14.28	4	150.00	0.00	-5.57	-4.16	-12.61	-7.26	4
150.00	10.00	-10.02	-14.27	-15.73	-13.36	4	150.00	10.00	-4.22	-4.58	-11.81	-6.59	4
150.00	20.00	-20.27	-20.94	-14.67	-12.59	4	150.00	20.00	-2.17	-6.25	-10.32	-5.47	4
150.00	30.00	-12.22	-13.70	-19.02	-12.92	4	150.00	30.00	-0.77	-9.25	-8.56	-5.61	4
150.00	40.00	-5.26	-10.04	-17.27	-14.78	4	150.00	40.00	-1.02	-11.60	-7.64	-8.36	4
150.00	50.00	-3.64	-9.12	-11.87	-18.21	4	150.00	50.00	-3.65	-11.49	-7.22	-11.90	4
150.00	60.00	-4.33	-9.13	-8.92	-20.59	4	150.00	60.00	-6.04	-11.23	-6.81	-14.90	4
150.00	70.00	-5.98	-11.21	-6.70	-19.56	4	150.00	70.00	-3.67	-9.99	-6.83	-16.18	4
150.00	80.00	-5.21	-16.18	-4.29	-15.58	4	150.00	80.00	-1.38	-6.24	-7.43	-17.23	4
150.00	90.00	-3.87	-8.74	-2.15	-12.10	4	150.00	90.00	-1.66	-6.05	-9.15	-18.55	4
150.00	100.00	-4.37	-6.14	-1.28	-11.64	4	150.00	100.00	-3.46	-8.43	-13.01	-17.03	4
150.00	110.00	-5.42	-7.48	-1.66	-11.76	4	150.00	110.00	-4.73	-7.96	-15.11	-19.13	4
150.00	120.00	-6.04	-11.11	-2.72	-7.81	4	150.00	120.00	-5.16	-4.74	-13.92	-20.72	4
150.00	130.00	-5.00	-8.29	-3.85	-6.88	4	150.00	130.00	-5.22	-3.13	-13.66	-13.44	4
150.00	140.00	-3.41	-5.65	-5.73	-9.75	4	150.00	140.00	-5.23	-2.56	-14.42	-8.93	4
150.00	150.00	-2.34	-6.11	-13.08	-11.88	4	150.00	150.00	-5.47	-2.38	-10.91	-6.05	4
150.00	160.00	-1.97	-7.87	-14.67	-10.25	4	150.00	160.00	-5.15	-3.30	-12.78	-4.75	4
150.00	170.00	-2.15	-7.54	-13.76	-7.60	4	150.00	170.00	-4.30	-6.32	-15.06	-4.76	4
150.00	180.00	-3.45	-5.53	-12.90	-5.70	4	150.00	180.00	-3.23	-10.32	-16.89	-6.76	4
150.00	190.00	-6.23	-4.28	-11.52	-4.68	4	150.00	190.00	-2.98	-10.74	-14.28	-9.53	4
150.00	200.00	-12.00	-4.21	-10.72	-4.29	4	150.00	200.00	-4.55	-10.47	-11.42	-12.62	4
150.00	210.00	-12.54	-4.96	-9.69	-4.23	4	150.00	210.00	-6.32	-13.21	-9.64	-11.84	4
150.00	220.00	-6.33	-5.84	-8.21	-4.02	4	150.00	220.00	-6.78	-15.88	-8.69	-8.27	4
150.00	230.00	-3.59	-7.08	-6.53	-3.52	4	150.00	230.00	-4.96	-13.29	-8.66	-6.32	4
150.00	240.00	-3.83	-6.94	-5.02	-3.08	4	150.00	240.00	-3.80	-9.88	-8.93	-5.58	4
150.00	250.00	-6.31	-7.26	-4.37	-2.64	4	150.00	250.00	-3.96	-6.98	-11.31	-6.24	4
150.00	260.00	-11.61	-8.50	-4.21	-3.05	4	150.00	260.00	-5.57	-4.63	-20.01	-9.20	4

150.00	270.00	-20.07	-11.02	-3.69	-2.95	4	150.00	270.00	-9.89	-3.55	-18.42	-18.48	4
150.00	280.00	-20.06	-16.99	-3.67	-1.91	4	150.00	280.00	-14.56	-3.46	-14.55	-17.75	4
150.00	290.00	-12.45	-17.17	-5.46	-1.80	4	150.00	290.00	-13.94	-2.39	-8.94	-14.56	4
150.00	300.00	-9.15	-10.04	-8.57	-2.74	4	150.00	300.00	-12.17	0.61	-6.79	-17.13	4
150.00	310.00	-11.38	-6.35	-10.95	-4.55	4	150.00	310.00	-6.80	2.77	-8.58	-13.32	4
150.00	320.00	-28.72	-4.07	-10.62	-5.95	4	150.00	320.00	-4.79	3.31	-13.33	-8.15	4
150.00	330.00	-14.90	-3.75	-10.78	-7.02	4	150.00	330.00	-6.79	2.31	-14.29	-6.30	4
150.00	340.00	-10.43	-4.43	-10.60	-8.88	4	150.00	340.00	-12.77	-0.57	-11.47	-6.34	4
150.00	350.00	-8.53	-5.60	-12.28	-10.71	4	150.00	350.00	-11.69	-3.64	-12.21	-7.07	4
165.00	0.00	-4.27	-0.54	-15.51	-16.89	4	165.00	0.00	-5.81	-4.60	-12.86	-7.38	4
165.00	10.00	-5.15	-1.37	-14.46	-22.67	4	165.00	10.00	-4.03	-7.82	-10.62	-8.56	4
165.00	20.00	-7.73	-2.26	-13.03	-22.31	4	165.00	20.00	-3.03	-10.07	-11.21	-10.52	4
165.00	30.00	-13.24	-2.91	-11.41	-19.72	4	165.00	30.00	-2.38	-10.78	-11.63	-13.05	4
165.00	40.00	-19.30	-3.34	-9.68	-18.75	4	165.00	40.00	-1.78	-10.76	-10.79	-13.90	4
165.00	50.00	-11.75	-3.22	-7.60	-19.28	4	165.00	50.00	-1.62	-10.50	-10.73	-13.97	4
165.00	60.00	-8.04	-3.09	-6.44	-23.22	4	165.00	60.00	-1.87	-10.88	-11.91	-14.51	4
165.00	70.00	-7.22	-3.31	-5.65	-32.10	4	165.00	70.00	-2.32	-11.63	-12.60	-15.20	4
165.00	80.00	-6.84	-2.85	-5.42	-21.43	4	165.00	80.00	-2.33	-12.82	-12.68	-19.70	4
165.00	90.00	-6.30	-2.51	-2.00	-21.99	4	165.00	90.00	-2.20	-15.95	-13.81	-19.64	4
165.00	100.00	-4.88	-2.55	-3.75	-15.49	4	165.00	100.00	-2.25	-15.92	-28.66	-16.19	4
165.00	110.00	-3.68	-3.50	-6.04	-13.79	4	165.00	110.00	-3.27	-10.68	-22.85	-15.14	4
165.00	120.00	-2.55	-5.34	-8.50	-13.54	4	165.00	120.00	-4.72	-7.42	-20.00	-15.09	4
165.00	130.00	-1.80	-8.20	-10.13	-14.05	4	165.00	130.00	-6.51	-6.55	-19.87	-16.23	4
165.00	140.00	-1.64	-11.98	-11.51	-13.06	4	165.00	140.00	-6.43	-6.70	-20.01	-15.49	4
165.00	150.00	-2.22	-19.51	-11.97	-12.10	4	165.00	150.00	-5.19	-8.16	-19.80	-13.02	4
165.00	160.00	-3.85	-34.54	-11.55	-10.06	4	165.00	160.00	-3.64	-9.61	-19.59	-11.91	4
165.00	170.00	-7.63	-19.29	-10.59	-8.38	4	165.00	170.00	-2.88	-11.76	-16.18	-11.97	4
165.00	180.00	-16.33	-14.02	-9.51	-7.15	4	165.00	180.00	-2.76	-14.08	-12.58	-14.01	4
165.00	190.00	-13.53	-11.85	-9.14	-6.11	4	165.00	190.00	-3.51	-16.01	-9.46	-18.30	4
165.00	200.00	-6.24	-10.78	-9.07	-5.67	4	165.00	200.00	-4.58	-19.71	-8.03	-20.53	4
165.00	210.00	-2.91	-10.53	-10.18	-5.93	4	165.00	210.00	-5.75	-25.21	-7.61	-22.22	4
165.00	220.00	-1.38	-10.05	-10.96	-6.62	4	165.00	220.00	-5.80	-26.12	-7.74	-20.69	4
165.00	230.00	-1.19	-10.00	-10.52	-6.95	4	165.00	230.00	-5.53	-16.76	-8.12	-16.47	4
165.00	240.00	-1.90	-11.26	-10.26	-7.79	4	165.00	240.00	-5.38	-10.69	-10.51	-14.76	4
165.00	250.00	-3.44	-12.16	-10.48	-7.84	4	165.00	250.00	-5.44	-7.23	-12.87	-13.60	4
165.00	260.00	-5.47	-12.37	-10.84	-7.36	4	165.00	260.00	-5.70	-4.66	-11.73	-12.19	4
165.00	270.00	-7.65	-12.86	-10.21	-6.79	4	165.00	270.00	-6.59	-2.71	-10.12	-13.12	4
165.00	280.00	-9.80	-13.34	-11.55	-6.27	4	165.00	280.00	-7.37	-1.10	-10.89	-15.86	4
165.00	290.00	-10.88	-16.41	-13.53	-6.75	4	165.00	290.00	-8.52	0.19	-14.00	-18.81	4
165.00	300.00	-11.62	-28.48	-15.80	-8.03	4	165.00	300.00	-9.10	1.40	-14.42	-17.94	4
165.00	310.00	-11.50	-13.68	-21.81	-9.02	4	165.00	310.00	-9.58	2.29	-11.32	-15.74	4
165.00	320.00	-9.89	-6.87	-24.06	-9.55	4	165.00	320.00	-9.56	2.67	-9.20	-13.31	4
165.00	330.00	-8.03	-3.36	-17.92	-10.36	4	165.00	330.00	-10.61	2.30	-10.43	-10.71	4
165.00	340.00	-6.85	-1.53	-16.81	-11.10	4	165.00	340.00	-11.48	1.33	-12.81	-8.85	4
165.00	350.00	-6.39	-1.13	-16.63	-12.02	4	165.00	350.00	-11.11	0.55	-14.55	-8.39	4
180.00	0.00	-12.39	-4.05	-11.34	-18.63	4	180.00	0.00	-5.23	-6.29	-17.80	-13.89	4
180.00	10.00	-12.19	-3.76	-11.29	-17.54	4	180.00	10.00	-5.14	-6.92	-17.24	-13.46	4
180.00	20.00	-12.69	-3.28	-11.23	-17.48	4	180.00	20.00	-5.21	-8.37	-16.77	-13.78	4
180.00	30.00	-12.89	-2.95	-11.83	-17.26	4	180.00	30.00	-5.32	-9.41	-14.94	-14.60	4
180.00	40.00	-11.89	-2.79	-11.85	-15.58	4	180.00	40.00	-5.48	-10.95	-13.10	-15.31	4
180.00	50.00	-10.27	-2.89	-12.79	-14.67	4	180.00	50.00	-6.25	-11.43	-12.15	-18.12	4
180.00	60.00	-9.09	-3.35	-14.32	-13.92	4	180.00	60.00	-6.88	-10.30	-11.44	-21.19	4
180.00	70.00	-7.98	-4.10	-17.23	-13.51	4	180.00	70.00	-8.09	-8.76	-10.43	-24.50	4
180.00	80.00	-7.07	-5.20	-21.61	-14.05	4	180.00	80.00	-9.43	-7.00	-9.90	-23.07	4
180.00	90.00	-6.30	-6.09	-22.49	-15.40	4	180.00	90.00	-11.13	-5.86	-10.12	-20.20	4
180.00	100.00	-5.43	-7.15	-20.58	-17.98	4	180.00	100.00	-13.39	-4.88	-10.37	-18.96	4

180.00	110.00	-5.27	-8.75	-18.20	-19.49	4	180.00	110.00	-14.84	-4.30	-10.65	-18.74	4
180.00	120.00	-4.97	-10.85	-16.56	-16.47	4	180.00	120.00	-14.31	-4.12	-11.29	-18.89	4
180.00	130.00	-5.39	-11.13	-15.05	-12.47	4	180.00	130.00	-12.02	-4.19	-12.27	-22.01	4
180.00	140.00	-6.33	-10.64	-14.22	-11.45	4	180.00	140.00	-9.80	-4.46	-14.68	-23.94	4
180.00	150.00	-7.45	-9.49	-12.08	-11.39	4	180.00	150.00	-8.07	-5.16	-13.02	-25.22	4
180.00	160.00	-9.63	-8.05	-13.42	-12.67	4	180.00	160.00	-6.60	-6.34	-11.67	-24.86	4
180.00	170.00	-13.21	-7.46	-15.32	-13.80	4	180.00	170.00	-5.80	-7.56	-10.43	-22.32	4
180.00	180.00	-20.85	-6.62	-16.96	-14.47	4	180.00	180.00	-5.52	-8.52	-9.80	-25.14	4
180.00	190.00	-27.88	-5.78	-20.32	-14.38	4	180.00	190.00	-5.58	-10.44	-9.74	-21.73	4
180.00	200.00	-15.06	-5.39	-25.24	-14.55	4	180.00	200.00	-5.58	-10.08	-9.71	-18.64	4
180.00	210.00	-11.11	-4.72	-20.60	-15.12	4	180.00	210.00	-5.92	-10.96	-9.97	-16.52	4
180.00	220.00	-8.58	-4.02	-15.89	-15.57	4	180.00	220.00	-6.87	-11.62	-10.49	-16.27	4
180.00	230.00	-7.17	-3.78	-12.25	-15.67	4	180.00	230.00	-8.47	-11.83	-10.42	-17.93	4
180.00	240.00	-6.13	-3.47	-9.47	-13.70	4	180.00	240.00	-10.11	-11.80	-10.60	-19.51	4
180.00	250.00	-5.14	-3.41	-7.54	-12.19	4	180.00	250.00	-12.27	-10.29	-11.58	-19.85	4
180.00	260.00	-4.56	-3.70	-7.40	-11.66	4	180.00	260.00	-15.00	-8.70	-14.17	-19.12	4
180.00	270.00	-4.21	-3.95	-8.26	-11.50	4	180.00	270.00	-17.99	-7.36	-17.99	-17.97	4
180.00	280.00	-3.87	-4.85	-9.31	-11.66	4	180.00	280.00	-17.31	-6.06	-22.87	-17.76	4
180.00	290.00	-4.26	-5.90	-11.69	-12.63	4	180.00	290.00	-13.65	-5.17	-21.34	-17.84	4
180.00	300.00	-4.92	-7.70	-12.91	-14.01	4	180.00	300.00	-11.14	-4.14	-18.97	-17.04	4
180.00	310.00	-5.83	-9.44	-12.55	-15.57	4	180.00	310.00	-9.46	-3.60	-21.21	-15.11	4
180.00	320.00	-7.02	-10.59	-10.28	-18.43	4	180.00	320.00	-8.04	-3.33	-27.34	-12.96	4
180.00	330.00	-7.92	-10.72	-10.58	-24.19	4	180.00	330.00	-7.04	-3.21	-31.94	-12.74	4
180.00	340.00	-8.84	-8.89	-10.40	-29.15	4	180.00	340.00	-5.96	-3.42	-26.16	-13.34	4
180.00	350.00	-9.37	-6.92	-10.71	-23.34	4	180.00	350.00	-5.38	-3.64	-20.31	-13.57	4

5260MHz

Theta Plorization							Phi Plorization						
Angle (θ)	Angle (ψ)	Max Gain(dBi)				N_{ANT}	Angle (θ)	Angle (ψ)	Max Gain(dBi)				N_{ANT}
		Ant 1(G1)	Ant 2(G2)	Ant 3(G3)	Ant 4(G4)				Ant 1(G1)	Ant 2(G2)	Ant 3(G3)	Ant 4(G4)	
0.00	0.00	-1.15	-1.78	-18.08	-5.41	4	0.00	0.00	-8.66	-1.71	0.87	3.29	4
0.00	10.00	-1.18	-1.22	-24.96	-7.29	4	0.00	10.00	-7.72	-2.36	0.85	3.39	4
0.00	20.00	-1.23	-0.34	-14.91	-13.06	4	0.00	20.00	-6.06	-3.82	0.85	3.47	4
0.00	30.00	-1.48	0.36	-8.55	-17.60	4	0.00	30.00	-4.48	-5.35	0.84	3.58	4
0.00	40.00	-2.09	0.89	-5.41	-9.68	4	0.00	40.00	-3.06	-7.16	0.18	3.56	4
0.00	50.00	-3.19	1.19	-3.21	-5.11	4	0.00	50.00	-2.00	-9.83	-0.96	3.09	4
0.00	60.00	-4.56	1.21	-1.65	-2.17	4	0.00	60.00	-1.08	-11.36	-2.18	2.31	4
0.00	70.00	-6.29	1.02	-0.18	-0.27	4	0.00	70.00	-0.48	-8.20	-4.26	1.08	4
0.00	80.00	-8.46	0.28	0.71	1.04	4	0.00	80.00	-0.28	-5.68	-7.31	-0.50	4
0.00	90.00	-10.26	-0.81	1.20	1.96	4	0.00	90.00	-0.49	-4.12	-12.66	-2.81	4
0.00	100.00	-9.97	-2.12	1.35	2.63	4	0.00	100.00	-1.01	-2.64	-20.74	-6.28	4
0.00	110.00	-8.36	-3.41	1.40	2.95	4	0.00	110.00	-1.91	-1.17	-13.67	-11.63	4
0.00	120.00	-6.35	-5.19	1.32	2.96	4	0.00	120.00	-3.19	-0.19	-7.40	-16.04	4
0.00	130.00	-4.77	-7.10	0.69	2.81	4	0.00	130.00	-4.69	0.22	-4.22	-10.35	4
0.00	140.00	-3.60	-8.96	-0.58	2.46	4	0.00	140.00	-6.44	0.26	-2.05	-6.51	4
0.00	150.00	-2.77	-9.09	-2.47	1.91	4	0.00	150.00	-8.22	0.22	-0.51	-3.97	4
0.00	160.00	-2.25	-7.69	-4.31	1.12	4	0.00	160.00	-8.96	0.06	0.43	-1.74	4
0.00	170.00	-2.18	-6.11	-7.49	-0.13	4	0.00	170.00	-8.40	-0.34	0.80	-0.06	4
0.00	180.00	-2.31	-4.07	-11.77	-1.92	4	0.00	180.00	-7.34	-1.19	1.30	0.76	4
0.00	190.00	-2.66	-2.34	-21.41	-4.57	4	0.00	190.00	-6.07	-2.36	1.69	0.66	4
0.00	200.00	-3.23	-0.98	-19.66	-9.20	4	0.00	200.00	-4.97	-3.87	1.46	1.39	4
0.00	210.00	-3.87	-0.23	-10.91	-15.52	4	0.00	210.00	-4.11	-5.50	0.81	2.37	4
0.00	220.00	-4.49	0.23	-6.69	-11.36	4	0.00	220.00	-3.53	-7.69	0.21	2.65	4
0.00	230.00	-5.26	0.42	-3.95	-6.79	4	0.00	230.00	-3.35	-9.35	-0.40	2.16	4
0.00	240.00	-6.00	0.49	-2.20	-3.47	4	0.00	240.00	-3.25	-9.64	-1.61	1.19	4
0.00	250.00	-6.55	0.46	-0.80	-0.95	4	0.00	250.00	-2.95	-7.77	-3.53	0.19	4
0.00	260.00	-7.21	0.18	0.20	0.78	4	0.00	260.00	-2.70	-5.57	-6.79	-1.00	4
0.00	270.00	-7.18	-0.37	0.82	2.18	4	0.00	270.00	-2.53	-3.83	-12.65	-3.13	4
0.00	280.00	-7.43	-1.49	1.07	2.92	4	0.00	280.00	-2.49	-2.47	-24.68	-6.22	4
0.00	290.00	-7.00	-2.92	0.81	3.21	4	0.00	290.00	-2.20	-1.36	-18.52	-11.85	4
0.00	300.00	-6.45	-4.80	0.39	3.11	4	0.00	300.00	-2.26	-0.27	-8.95	-18.73	4
0.00	310.00	-5.58	-6.92	-0.42	3.05	4	0.00	310.00	-2.42	0.40	-5.47	-9.05	4
0.00	320.00	-4.64	-8.76	-1.59	2.63	4	0.00	320.00	-3.00	0.90	-3.30	-4.39	4
0.00	330.00	-3.63	-8.51	-2.83	1.87	4	0.00	330.00	-3.72	1.04	-1.68	-1.72	4
0.00	340.00	-2.73	-6.76	-4.49	0.64	4	0.00	340.00	-4.90	0.85	-0.64	0.26	4
0.00	350.00	-2.04	-4.53	-7.01	-0.84	4	0.00	350.00	-6.91	0.20	-0.11	2.04	4
15.00	0.00	1.03	-5.13	-16.00	-5.23	4	15.00	0.00	-7.61	-2.85	-0.03	3.20	4
15.00	10.00	1.01	-3.44	-14.75	-10.08	4	15.00	10.00	-5.90	-4.48	-0.57	3.64	4
15.00	20.00	1.02	-1.53	-10.95	-14.23	4	15.00	20.00	-3.88	-7.00	-1.68	3.43	4
15.00	30.00	0.53	-0.11	-8.02	-10.58	4	15.00	30.00	-2.31	-9.86	-2.47	2.83	4
15.00	40.00	-0.26	0.41	-5.58	-6.06	4	15.00	40.00	-1.32	-9.29	-3.68	2.05	4
15.00	50.00	-1.22	0.30	-3.84	-3.06	4	15.00	50.00	-0.35	-6.83	-5.83	1.25	4
15.00	60.00	-2.51	-0.08	-2.53	-0.84	4	15.00	60.00	0.46	-4.25	-7.83	0.41	4
15.00	70.00	-4.55	-0.65	-1.46	0.82	4	15.00	70.00	0.95	-2.19	-9.45	-0.68	4
15.00	80.00	-7.79	-1.32	-0.88	1.99	4	15.00	80.00	1.09	-1.05	-11.08	-2.53	4
15.00	90.00	-14.12	-2.07	-0.66	2.35	4	15.00	90.00	0.75	-0.69	-15.19	-4.86	4
15.00	100.00	-16.25	-3.22	-0.44	2.04	4	15.00	100.00	-0.10	-0.96	-23.04	-7.81	4
15.00	110.00	-8.98	-4.65	-0.69	1.69	4	15.00	110.00	-1.39	-1.32	-11.83	-11.55	4
15.00	120.00	-4.93	-6.58	-1.10	1.06	4	15.00	120.00	-3.40	-1.51	-7.40	-12.68	4
15.00	130.00	-2.86	-9.69	-1.22	0.42	4	15.00	130.00	-6.14	-1.30	-4.48	-8.97	4
15.00	140.00	-1.90	-13.72	-2.14	-0.33	4	15.00	140.00	-9.56	-1.39	-2.51	-5.39	4

15.00	150.00	-1.58	-16.30	-3.64	-1.14	4	15.00	150.00	-10.77	-1.51	-0.99	-2.84	4
15.00	160.00	-1.83	-10.90	-5.75	-2.37	4	15.00	160.00	-9.32	-1.89	-0.12	-1.11	4
15.00	170.00	-2.42	-6.72	-7.47	-4.16	4	15.00	170.00	-7.26	-2.55	0.56	-0.22	4
15.00	180.00	-3.22	-4.09	-9.04	-7.71	4	15.00	180.00	-5.69	-3.79	0.91	0.04	4
15.00	190.00	-4.13	-2.47	-8.95	-13.36	4	15.00	190.00	-4.66	-5.60	1.07	-0.30	4
15.00	200.00	-5.50	-1.39	-7.56	-19.26	4	15.00	200.00	-3.77	-8.96	0.71	-0.77	4
15.00	210.00	-7.47	-0.87	-5.95	-16.91	4	15.00	210.00	-2.81	-14.15	-0.19	-1.25	4
15.00	220.00	-10.40	-0.39	-3.87	-14.50	4	15.00	220.00	-2.11	-24.48	-1.06	-1.90	4
15.00	230.00	-15.79	-0.09	-1.78	-11.92	4	15.00	230.00	-2.04	-14.65	-1.72	-2.67	4
15.00	240.00	-20.18	-0.14	0.12	-8.58	4	15.00	240.00	-2.06	-8.13	-3.08	-3.36	4
15.00	250.00	-14.31	-0.42	1.12	-5.27	4	15.00	250.00	-2.34	-4.77	-5.37	-4.53	4
15.00	260.00	-9.61	-0.99	1.51	-3.47	4	15.00	260.00	-3.64	-2.37	-9.04	-6.99	4
15.00	270.00	-6.62	-1.78	1.78	-2.24	4	15.00	270.00	-5.89	-0.39	-16.47	-10.08	4
15.00	280.00	-4.70	-3.14	1.89	-1.54	4	15.00	280.00	-8.93	1.09	-14.25	-16.45	4
15.00	290.00	-3.73	-5.17	1.85	-0.48	4	15.00	290.00	-9.65	2.01	-8.83	-23.27	4
15.00	300.00	-3.51	-8.07	1.22	0.41	4	15.00	300.00	-7.41	2.41	-6.25	-12.04	4
15.00	310.00	-3.29	-11.78	0.40	0.72	4	15.00	310.00	-5.54	2.28	-4.35	-6.79	4
15.00	320.00	-2.91	-13.57	-0.77	0.75	4	15.00	320.00	-4.78	1.81	-2.62	-3.33	4
15.00	330.00	-2.32	-10.92	-2.56	0.47	4	15.00	330.00	-4.93	1.07	-1.56	-0.67	4
15.00	340.00	-1.40	-8.65	-5.06	-0.23	4	15.00	340.00	-5.64	0.15	-0.96	0.84	4
15.00	350.00	-0.63	-7.38	-6.78	-1.04	4	15.00	350.00	-6.26	-0.42	-0.75	1.40	4
30.00	0.00	2.51	-5.50	-13.95	-13.52	4	30.00	0.00	-3.89	-3.52	0.30	-2.46	4
30.00	10.00	1.95	-5.32	-20.81	-15.90	4	30.00	10.00	-3.87	-3.96	0.03	-2.83	4
30.00	20.00	2.07	-5.40	-15.48	-12.02	4	30.00	20.00	-3.27	-4.53	-0.58	-3.29	4
30.00	30.00	2.00	-4.62	-8.02	-7.47	4	30.00	30.00	-2.76	-4.93	-2.02	-3.59	4
30.00	40.00	1.58	-3.94	-5.26	-4.88	4	30.00	40.00	-1.85	-7.46	-4.64	-4.35	4
30.00	50.00	0.54	-4.12	-4.52	-3.55	4	30.00	50.00	-0.70	-11.53	-9.20	-4.81	4
30.00	60.00	-0.97	-4.60	-5.27	-2.05	4	30.00	60.00	0.47	-8.14	-12.53	-3.73	4
30.00	70.00	-3.62	-4.68	-5.43	-0.12	4	30.00	70.00	0.94	-4.87	-13.28	-3.43	4
30.00	80.00	-8.21	-3.98	-4.35	1.05	4	30.00	80.00	0.26	-2.54	-14.64	-4.80	4
30.00	90.00	-16.24	-3.79	-2.95	1.42	4	30.00	90.00	-1.24	-1.37	-17.25	-5.86	4
30.00	100.00	-31.58	-4.61	-2.32	1.52	4	30.00	100.00	-2.31	-1.24	-24.23	-6.14	4
30.00	110.00	-17.21	-5.58	-2.50	1.08	4	30.00	110.00	-2.68	-1.75	-15.11	-7.20	4
30.00	120.00	-11.69	-6.92	-3.13	1.04	4	30.00	120.00	-3.15	-3.27	-9.23	-10.02	4
30.00	130.00	-7.79	-7.36	-3.40	1.15	4	30.00	130.00	-4.93	-5.82	-5.28	-6.91	4
30.00	140.00	-5.22	-7.37	-5.50	0.69	4	30.00	140.00	-8.18	-6.52	-4.82	-4.25	4
30.00	150.00	-4.13	-8.76	-7.80	-0.85	4	30.00	150.00	-12.43	-5.82	-4.00	-3.08	4
30.00	160.00	-4.24	-10.26	-10.12	-2.90	4	30.00	160.00	-15.92	-5.15	-3.40	-2.52	4
30.00	170.00	-5.02	-10.32	-11.71	-5.46	4	30.00	170.00	-16.18	-4.24	-2.91	-2.27	4
30.00	180.00	-5.97	-7.72	-10.97	-9.32	4	30.00	180.00	-13.13	-4.36	-2.45	-2.19	4
30.00	190.00	-5.95	-5.30	-8.96	-15.37	4	30.00	190.00	-9.51	-6.04	-2.11	-2.01	4
30.00	200.00	-5.38	-3.39	-6.78	-27.78	4	30.00	200.00	-5.74	-9.92	-1.95	-1.96	4
30.00	210.00	-5.30	-2.54	-5.62	-22.19	4	30.00	210.00	-2.71	-12.81	-1.68	-2.96	4
30.00	220.00	-6.08	-2.56	-3.92	-16.24	4	30.00	220.00	-0.35	-12.14	-1.87	-3.98	4
30.00	230.00	-7.98	-2.75	-2.93	-12.10	4	30.00	230.00	0.86	-8.39	-2.20	-5.03	4
30.00	240.00	-10.63	-3.11	-2.25	-9.63	4	30.00	240.00	0.92	-6.01	-3.43	-6.48	4
30.00	250.00	-14.53	-3.91	-0.73	-8.60	4	30.00	250.00	-0.02	-5.59	-4.92	-7.15	4
30.00	260.00	-20.04	-4.26	0.71	-10.04	4	30.00	260.00	-1.11	-4.99	-6.60	-6.35	4
30.00	270.00	-13.25	-4.58	1.72	-9.79	4	30.00	270.00	-1.83	-3.15	-10.99	-8.65	4
30.00	280.00	-7.63	-4.92	2.57	-7.69	4	30.00	280.00	-3.58	-0.72	-36.29	-17.20	4
30.00	290.00	-4.36	-6.70	2.91	-8.54	4	30.00	290.00	-7.54	1.35	-11.43	-15.27	4
30.00	300.00	-2.62	-10.32	2.41	-12.28	4	30.00	300.00	-14.98	2.01	-7.35	-13.72	4
30.00	310.00	-2.16	-13.21	1.61	-12.82	4	30.00	310.00	-14.50	1.67	-5.45	-15.27	4
30.00	320.00	-1.66	-12.59	0.64	-7.25	4	30.00	320.00	-9.76	0.89	-3.48	-12.77	4
30.00	330.00	-1.34	-10.17	-0.73	-4.59	4	30.00	330.00	-6.55	-0.18	-1.98	-7.38	4
30.00	340.00	-0.90	-8.89	-2.12	-5.25	4	30.00	340.00	-5.02	-1.25	-0.66	-3.17	4

30.00	350.00	-0.03	-7.84	-4.21	-9.00	4	30.00	350.00	-4.53	-2.14	0.19	-1.46	4
45.00	0.00	0.99	-10.65	-12.10	-9.33	4	45.00	0.00	-13.48	-1.06	-1.36	-13.01	4
45.00	10.00	0.90	-11.65	-27.95	-7.40	4	45.00	10.00	-9.76	-1.92	-1.63	-12.35	4
45.00	20.00	1.96	-12.38	-15.77	-7.04	4	45.00	20.00	-4.45	-3.44	-3.14	-4.17	4
45.00	30.00	2.29	-12.08	-9.75	-4.88	4	45.00	30.00	-1.02	-5.44	-6.88	-1.36	4
45.00	40.00	1.89	-11.93	-6.03	-2.75	4	45.00	40.00	0.46	-6.81	-11.65	-1.43	4
45.00	50.00	-0.19	-9.99	-4.82	-2.05	4	45.00	50.00	-0.04	-6.81	-20.30	-1.52	4
45.00	60.00	-4.60	-8.41	-5.71	0.08	4	45.00	60.00	-1.02	-6.10	-12.25	-0.81	4
45.00	70.00	-11.70	-8.09	-6.59	1.80	4	45.00	70.00	-0.98	-8.04	-12.62	-2.45	4
45.00	80.00	-15.06	-8.54	-5.06	1.23	4	45.00	80.00	-1.63	-5.22	-20.14	-6.50	4
45.00	90.00	-17.86	-7.97	-4.72	1.88	4	45.00	90.00	-4.11	-3.67	-19.50	-9.25	4
45.00	100.00	-24.75	-7.99	-5.71	2.35	4	45.00	100.00	-5.19	-2.06	-14.85	-13.12	4
45.00	110.00	-11.86	-8.38	-6.05	1.26	4	45.00	110.00	-5.68	-2.62	-12.17	-15.92	4
45.00	120.00	-7.83	-7.84	-5.95	1.27	4	45.00	120.00	-8.41	-3.30	-10.09	-14.52	4
45.00	130.00	-7.49	-7.48	-6.91	1.37	4	45.00	130.00	-12.43	-6.04	-7.76	-8.19	4
45.00	140.00	-7.25	-7.59	-9.58	0.48	4	45.00	140.00	-14.67	-7.00	-5.15	-4.75	4
45.00	150.00	-6.44	-9.22	-12.02	-0.75	4	45.00	150.00	-16.47	-5.22	-2.56	-3.89	4
45.00	160.00	-6.07	-14.01	-13.38	-2.45	4	45.00	160.00	-22.80	-4.10	-0.65	-3.64	4
45.00	170.00	-5.66	-21.78	-11.12	-5.05	4	45.00	170.00	-20.63	-4.40	0.06	-2.96	4
45.00	180.00	-4.51	-14.49	-7.77	-8.09	4	45.00	180.00	-9.88	-6.31	-0.19	-2.31	4
45.00	190.00	-3.46	-11.80	-5.29	-11.50	4	45.00	190.00	-5.16	-10.24	-0.49	-2.56	4
45.00	200.00	-3.13	-9.48	-3.75	-15.04	4	45.00	200.00	-2.49	-14.32	-1.14	-3.65	4
45.00	210.00	-2.93	-7.93	-2.84	-18.07	4	45.00	210.00	-0.82	-18.20	-2.53	-4.69	4
45.00	220.00	-2.62	-7.68	-2.17	-13.60	4	45.00	220.00	0.24	-11.37	-3.89	-4.22	4
45.00	230.00	-3.37	-10.23	-1.53	-10.11	4	45.00	230.00	0.98	-8.23	-3.94	-3.41	4
45.00	240.00	-6.73	-10.81	-0.71	-8.02	4	45.00	240.00	1.69	-7.20	-4.35	-6.89	4
45.00	250.00	-12.78	-7.90	0.60	-7.54	4	45.00	250.00	2.04	-5.82	-6.95	-19.95	4
45.00	260.00	-11.46	-7.84	1.89	-7.47	4	45.00	260.00	0.65	-5.22	-13.70	-16.86	4
45.00	270.00	-7.56	-9.20	2.52	-7.56	4	45.00	270.00	-2.36	-3.23	-20.22	-16.93	4
45.00	280.00	-7.09	-10.87	2.63	-8.56	4	45.00	280.00	-5.17	-0.50	-16.17	-11.14	4
45.00	290.00	-6.76	-10.30	2.13	-13.06	4	45.00	290.00	-9.34	1.43	-9.45	-14.79	4
45.00	300.00	-5.22	-9.69	1.58	-23.60	4	45.00	300.00	-15.84	1.11	-8.79	-16.56	4
45.00	310.00	-4.80	-9.19	0.89	-15.20	4	45.00	310.00	-14.42	0.06	-7.87	-13.65	4
45.00	320.00	-4.56	-10.92	-0.11	-8.08	4	45.00	320.00	-14.54	-0.89	-5.04	-30.17	4
45.00	330.00	-3.87	-13.14	-2.11	-8.30	4	45.00	330.00	-12.88	-1.00	-4.53	-9.49	4
45.00	340.00	-3.10	-13.80	-3.29	-11.88	4	45.00	340.00	-10.71	-0.66	-3.64	-6.53	4
45.00	350.00	-2.41	-12.86	-4.45	-15.11	4	45.00	350.00	-10.17	-0.51	-3.23	-6.19	4
60.00	0.00	-0.23	-10.18	-6.73	-17.19	4	60.00	0.00	-11.82	-1.21	-2.84	-5.39	4
60.00	10.00	-0.43	-10.29	-9.27	-20.03	4	60.00	10.00	-10.43	-1.74	-3.26	-5.89	4
60.00	20.00	-0.24	-11.26	-19.89	-19.46	4	60.00	20.00	-9.62	-3.08	-5.58	-7.35	4
60.00	30.00	0.47	-12.59	-13.45	-13.68	4	60.00	30.00	-7.06	-6.42	-9.93	-4.35	4
60.00	40.00	1.07	-13.03	-7.94	-8.31	4	60.00	40.00	-3.54	-10.28	-18.18	-0.84	4
60.00	50.00	0.05	-11.95	-7.24	-3.97	4	60.00	50.00	-1.25	-10.47	-9.74	-0.51	4
60.00	60.00	-2.79	-12.52	-7.29	-2.50	4	60.00	60.00	-1.84	-13.34	-9.24	-2.23	4
60.00	70.00	-4.43	-14.31	-6.32	-2.07	4	60.00	70.00	-1.78	-13.93	-11.06	-2.38	4
60.00	80.00	-7.66	-20.07	-4.24	-0.17	4	60.00	80.00	-2.55	-9.07	-16.87	-4.05	4
60.00	90.00	-13.56	-17.05	-4.56	0.45	4	60.00	90.00	-5.50	-11.37	-27.23	-6.84	4
60.00	100.00	-7.95	-10.48	-6.21	-0.08	4	60.00	100.00	-7.39	-10.27	-16.87	-10.19	4
60.00	110.00	-10.48	-9.72	-6.31	0.56	4	60.00	110.00	-8.26	-6.58	-12.80	-9.14	4
60.00	120.00	-17.29	-9.59	-4.97	0.06	4	60.00	120.00	-10.26	-5.72	-11.61	-9.13	4
60.00	130.00	-11.35	-11.04	-4.25	0.57	4	60.00	130.00	-6.93	-5.24	-7.66	-7.94	4
60.00	140.00	-8.41	-10.42	-5.41	1.18	4	60.00	140.00	-6.34	-5.65	-6.66	-4.19	4
60.00	150.00	-6.12	-6.91	-8.52	-0.05	4	60.00	150.00	-7.99	-5.83	-6.22	-0.64	4
60.00	160.00	-7.00	-7.61	-10.96	-1.57	4	60.00	160.00	-9.27	-2.51	-4.86	-0.15	4
60.00	170.00	-9.52	-9.24	-11.03	-3.01	4	60.00	170.00	-13.42	-1.72	-3.69	-0.25	4
60.00	180.00	-11.05	-7.96	-10.32	-4.26	4	60.00	180.00	-19.03	-3.20	-3.87	-0.22	4

60.00	190.00	-11.98	-5.83	-7.85	-5.12	4	60.00	190.00	-9.92	-8.01	-4.87	-0.07	4
60.00	200.00	-10.94	-5.97	-4.30	-7.18	4	60.00	200.00	-4.92	-19.37	-5.73	-0.06	4
60.00	210.00	-7.91	-7.06	-1.80	-9.76	4	60.00	210.00	-2.61	-13.68	-8.06	-0.17	4
60.00	220.00	-5.35	-7.66	-0.61	-11.85	4	60.00	220.00	-0.02	-6.59	-11.07	-0.90	4
60.00	230.00	-3.07	-8.92	0.11	-14.24	4	60.00	230.00	1.63	-3.91	-11.91	-1.60	4
60.00	240.00	-2.53	-15.15	0.36	-16.69	4	60.00	240.00	1.63	-4.38	-10.25	-2.36	4
60.00	250.00	-4.02	-47.90	0.20	-14.48	4	60.00	250.00	1.31	-6.00	-7.27	-4.59	4
60.00	260.00	-5.29	-19.32	1.83	-15.51	4	60.00	260.00	0.81	-6.01	-8.77	-11.25	4
60.00	270.00	-6.60	-11.44	3.17	-17.64	4	60.00	270.00	-1.87	-7.49	-23.64	-16.40	4
60.00	280.00	-9.93	-11.11	1.75	-16.08	4	60.00	280.00	-4.28	-3.76	-21.09	-21.17	4
60.00	290.00	-8.09	-11.75	0.30	-10.23	4	60.00	290.00	-7.87	0.60	-11.14	-16.61	4
60.00	300.00	-6.53	-11.11	-0.83	-8.08	4	60.00	300.00	-8.47	1.94	-10.71	-11.38	4
60.00	310.00	-6.75	-13.01	0.14	-7.99	4	60.00	310.00	-9.21	1.69	-10.51	-10.80	4
60.00	320.00	-7.42	-20.90	0.06	-13.34	4	60.00	320.00	-11.45	0.91	-7.99	-8.68	4
60.00	330.00	-8.01	-17.92	-1.88	-18.62	4	60.00	330.00	-10.75	1.36	-5.29	-12.42	4
60.00	340.00	-8.59	-13.70	-3.11	-28.15	4	60.00	340.00	-11.69	1.84	-6.22	-13.99	4
60.00	350.00	-5.42	-10.85	-3.02	-23.79	4	60.00	350.00	-14.09	1.83	-6.81	-8.10	4
75.00	0.00	0.42	-12.56	-6.06	-22.66	4	75.00	0.00	-13.27	-1.97	-2.44	-8.20	4
75.00	10.00	0.24	-16.93	-10.98	-21.45	4	75.00	10.00	-9.40	-4.61	-4.59	-6.51	4
75.00	20.00	-1.32	-21.61	-17.78	-23.27	4	75.00	20.00	-8.88	-7.12	-13.12	-2.17	4
75.00	30.00	-0.54	-20.62	-12.18	-13.50	4	75.00	30.00	-9.67	-9.77	-13.36	-0.37	4
75.00	40.00	0.20	-15.36	-9.98	-9.24	4	75.00	40.00	-4.74	-13.07	-6.84	-1.71	4
75.00	50.00	-2.68	-12.73	-9	-7.37	4	75.00	50.00	-2.88	-17.24	-7.67	-2.57	4
75.00	60.00	-7.48	-15.97	-11.75	-1.45	4	75.00	60.00	-2.99	-9.77	-10.1	-4.30	4
75.00	70.00	-3.34	-19.96	-7.97	-0.03	4	75.00	70.00	-3.3	-8.72	-18.75	-7.31	4
75.00	80.00	-5.13	-20.61	-9.26	1.42	4	75.00	80.00	-4.87	-12.00	-17.32	-9.09	4
75.00	90.00	-10.23	-11.14	-8.57	1.37	4	75.00	90.00	-4.49	-8.21	-12.98	-9.37	4
75.00	100.00	-13.69	-7.79	-6.73	3.03	4	75.00	100.00	-9.67	-5.68	-11.91	-9.74	4
75.00	110.00	-11.62	-7.71	-5.39	1.45	4	75.00	110.00	-10.15	-3.12	-18.57	-6.42	4
75.00	120.00	-10.66	-8.38	-5.95	1.46	4	75.00	120.00	-6.91	-1.08	-11.10	-7.59	4
75.00	130.00	-15.65	-11.73	-6.57	1.85	4	75.00	130.00	-7.65	-3.01	-5.84	-6.21	4
75.00	140.00	-20.00	-8.77	-5.49	1.15	4	75.00	140.00	-9.72	-5.92	-4.03	-6.49	4
75.00	150.00	-15.49	-9.78	-5.21	0.52	4	75.00	150.00	-9.53	-3.87	-2.84	-5.54	4
75.00	160.00	-11.02	-19.37	-5.95	-0.64	4	75.00	160.00	-9.96	-3.17	-3.40	-3.97	4
75.00	170.00	-7.96	-16.23	-6.00	-1.67	4	75.00	170.00	-9.90	-3.97	-4.06	-2.28	4
75.00	180.00	-7.53	-11.91	-5.91	-2.60	4	75.00	180.00	-6.81	-7.51	-3.22	-1.77	4
75.00	190.00	-11.09	-11.79	-4.61	-3.29	4	75.00	190.00	-2.70	-13.77	-2.55	-1.83	4
75.00	200.00	-19.92	-12.16	-2.64	-3.48	4	75.00	200.00	-0.67	-8.45	-3.15	-2.36	4
75.00	210.00	-6.16	-12.84	-1.05	-3.31	4	75.00	210.00	-0.84	-4.49	-5.22	-2.78	4
75.00	220.00	-2.73	-12.07	0.04	-3.64	4	75.00	220.00	-1.96	-2.41	-11.20	-3.30	4
75.00	230.00	-3.00	-13.18	1.00	-5.85	4	75.00	230.00	-3.22	-1.19	-17.70	-3.20	4
75.00	240.00	-5.55	-12.98	1.00	-6.95	4	75.00	240.00	-2.06	-1.29	-18.93	-3.92	4
75.00	250.00	-6.38	-11.46	-0.15	-7.14	4	75.00	250.00	-1.84	-1.81	-22.77	-6.14	4
75.00	260.00	-6.25	-10.02	-0.09	-11.37	4	75.00	260.00	-2.63	-4.09	-15.82	-12.15	4
75.00	270.00	-9.91	-11.71	0.23	-11.99	4	75.00	270.00	-3.06	-1.88	-16.67	-23.19	4
75.00	280.00	-10.32	-14.96	1.23	-10.14	4	75.00	280.00	-5.40	0.99	-19.52	-14.34	4
75.00	290.00	-7.88	-20.90	1.20	-11.57	4	75.00	290.00	-6.54	2.22	-11.71	-10.78	4
75.00	300.00	-6.82	-26.10	-0.62	-20.71	4	75.00	300.00	-9.10	1.47	-10.85	-8.80	4
75.00	310.00	-3.67	-18.27	-0.30	-11.33	4	75.00	310.00	-9.21	1.67	-8.83	-5.93	4
75.00	320.00	-2.76	-14.98	-2.74	-17.11	4	75.00	320.00	-5.43	2.48	-4.31	-4.88	4
75.00	330.00	-5.12	-10.98	-6.31	-13.16	4	75.00	330.00	-6.14	3.03	-5.47	-6.91	4
75.00	340.00	-2.25	-10.34	-5.83	-16.07	4	75.00	340.00	-9.48	2.64	-8.96	-13.60	4
75.00	350.00	0.99	-11.00	-4.73	-18.89	4	75.00	350.00	-12.79	1.75	-9.05	-14.76	4
90.00	0.00	0.54	-16.23	-10.30	-19.66	4	90.00	0.00	-14.32	-3.76	-4.52	-4.09	4
90.00	10.00	0.25	-17.37	-11.54	-17.46	4	90.00	10.00	-14.31	-4.67	-4.02	-5.68	4
90.00	20.00	-2.22	-20.77	-13.57	-11.07	4	90.00	20.00	-11.64	-6.12	-6.66	-6.35	4

90.00	30.00	-5.13	-15.02	-13.59	-10.04	4	90.00	30.00	-9.37	-6.96	-16.16	-3.57	4
90.00	40.00	-1.95	-13.50	-9.84	-8.58	4	90.00	40.00	-10.47	-5.06	-5.81	-4.40	4
90.00	50.00	0.21	-13.02	-11.29	-5.36	4	90.00	50.00	-7.98	-4.39	-8.03	-9.67	4
90.00	60.00	-1.4	-11.30	-9.77	-5.02	4	90.00	60.00	-5.27	-7.07	-11.12	-8.92	4
90.00	70.00	-3.76	-11.03	-14.52	-0.73	4	90.00	70.00	-5.13	-12.24	-7.64	-13.66	4
90.00	80.00	-2.65	-11.63	-8.8	-0.40	4	90.00	80.00	-3.42	-10.15	-24.21	-6.42	4
90.00	90.00	-6.4	-14.36	-5.96	0.58	4	90.00	90.00	-2.11	-5.39	-14.12	-11.38	4
90.00	100.00	-11.44	-12.04	-2.01	0.97	4	90.00	100.00	-3.3	-2.88	-11.56	-17.64	4
90.00	110.00	-10.94	-15.38	-2.74	1.93	4	90.00	110.00	-4.83	-2.34	-21.85	-23.83	4
90.00	120.00	-8.27	-11.70	-3.61	1.64	4	90.00	120.00	-7.08	-2.70	-16.62	-26.69	4
90.00	130.00	-6.01	-16.16	-4.30	1.56	4	90.00	130.00	-11.37	-2.08	-10.10	-10.94	4
90.00	140.00	-7.83	-16.18	-3.58	-0.35	4	90.00	140.00	-7.35	-1.63	-4.07	-20.67	4
90.00	150.00	-8.87	-13.81	-3.84	-1.22	4	90.00	150.00	-5.10	-3.38	-1.10	-13.92	4
90.00	160.00	-7.55	-23.51	-4.67	0.23	4	90.00	160.00	-6.71	-7.46	-2.62	-5.59	4
90.00	170.00	-5.36	-16.45	-4.23	-0.46	4	90.00	170.00	-10.82	-11.22	-5.63	-4.70	4
90.00	180.00	-5.59	-9.67	-3.11	-2.67	4	90.00	180.00	-14.28	-13.22	-8.18	-4.73	4
90.00	190.00	-8.85	-8.50	-2.03	-3.71	4	90.00	190.00	-10.12	-13.38	-7.74	-3.41	4
90.00	200.00	-14.64	-10.85	-1.25	-3.50	4	90.00	200.00	-6.40	-11.17	-6.62	-3.55	4
90.00	210.00	-6.97	-12.79	-0.61	-3.32	4	90.00	210.00	-3.27	-8.41	-5.12	-2.88	4
90.00	220.00	-1.96	-10.99	-0.31	-2.94	4	90.00	220.00	-1.84	-4.66	-3.75	-2.78	4
90.00	230.00	-0.27	-8.76	0.05	-1.94	4	90.00	230.00	-3.47	-2.93	-5.85	-2.73	4
90.00	240.00	-1.03	-6.87	0.37	-1.71	4	90.00	240.00	-6.72	-0.88	-11.77	-3.56	4
90.00	250.00	-2.50	-6.32	-0.78	-1.85	4	90.00	250.00	-4.56	0.57	-11.82	-7.88	4
90.00	260.00	-3.09	-8.18	-2.11	-3.65	4	90.00	260.00	-3.84	0.23	-10.52	-12.11	4
90.00	270.00	-4.13	-12.10	-1.38	-5.74	4	90.00	270.00	-2.92	0.61	-15.08	-15.24	4
90.00	280.00	-5.47	-13.32	-1.11	-8.39	4	90.00	280.00	-3.82	2.49	-14.02	-26.78	4
90.00	290.00	-3.28	-11.04	0.59	-12.18	4	90.00	290.00	-4.04	3.11	-11.55	-16.10	4
90.00	300.00	-2.61	-17.44	-0.42	-27.04	4	90.00	300.00	-6.53	2.53	-7.55	-14.09	4
90.00	310.00	-2.95	-9.87	-1.91	-29.07	4	90.00	310.00	-9.65	2.45	-11.37	-9.77	4
90.00	320.00	-0.96	-6.00	-2.65	-14.59	4	90.00	320.00	-7.74	3.36	-15.15	-10.46	4
90.00	330.00	-2.27	-8.61	-4.76	-12.62	4	90.00	330.00	-10.99	2.82	-9.34	-8.78	4
90.00	340.00	-4.49	-16.60	-8.54	-13.59	4	90.00	340.00	-19.47	1.68	-8.50	-19.91	4
90.00	350.00	0.28	-23.45	-9.93	-15.71	4	90.00	350.00	-24.67	-0.22	-11.10	-10.30	4
105.00	0.00	-2.40	-12.30	-16.30	-20.26	4	105.00	0.00	-15.41	-6.25	-12.23	-10.92	4
105.00	10.00	-2.67	-11.20	-17.35	-13.62	4	105.00	10.00	-10.26	-5.07	-11.94	-9.02	4
105.00	20.00	-13.27	-10.44	-31.54	-9.00	4	105.00	20.00	-6.77	-4.88	-22.62	-12.66	4
105.00	30.00	-4.31	-10.01	-12.58	-6.63	4	105.00	30.00	-5.29	-2.61	-11.20	-9.31	4
105.00	40.00	0.40	-11.22	-10.23	-5.87	4	105.00	40.00	-5.50	-2.47	-7.32	-7.35	4
105.00	50.00	-0.10	-11.44	-21.39	-6.97	4	105.00	50.00	-2.76	-5.18	-13.44	-10.39	4
105.00	60.00	-2.83	-11.22	-7.69	-5.54	4	105.00	60.00	-3.83	-10.49	-9.63	-33.77	4
105.00	70.00	-2.08	-9.77	-5.56	-1.19	4	105.00	70.00	-4.7	-4.42	-11.06	-7.70	4
105.00	80.00	-3.96	-10.00	-2.60	-0.35	4	105.00	80.00	-1.66	-3.33	-40.06	-8.75	4
105.00	90.00	-6.75	-11.32	-3.01	1.13	4	105.00	90.00	-2.23	-2.10	-19.86	-20.09	4
105.00	100.00	-4.76	-9.06	-2.58	0.18	4	105.00	100.00	-2.52	-3.94	-20.23	-22.83	4
105.00	110.00	-5.32	-12.24	-2.40	2.33	4	105.00	110.00	-4.76	-3.38	-10.67	-19.74	4
105.00	120.00	-7.53	-25.39	-1.01	0.56	4	105.00	120.00	-10.13	-3.32	-10.37	-26.83	4
105.00	130.00	-10.67	-19.76	-0.96	0.65	4	105.00	130.00	-11.13	-1.30	-7.00	-10.67	4
105.00	140.00	-5.24	-10.79	-1.72	0.57	4	105.00	140.00	-10.24	-1.25	-6.18	-10.08	4
105.00	150.00	-1.67	-10.88	-2.69	-0.17	4	105.00	150.00	-13.33	-4.62	-6.50	-8.19	4
105.00	160.00	-0.69	-15.69	-3.03	-0.81	4	105.00	160.00	-28.08	-12.45	-7.15	-7.03	4
105.00	170.00	-1.65	-7.46	-2.91	-1.67	4	105.00	170.00	-14.71	-24.87	-7.38	-6.73	4
105.00	180.00	-4.97	-3.42	-2.94	-2.29	4	105.00	180.00	-20.62	-10.94	-9.35	-6.43	4
105.00	190.00	-14.60	-2.73	-2.85	-1.78	4	105.00	190.00	-19.96	-9.30	-18.59	-4.20	4
105.00	200.00	-12.10	-4.98	-2.93	-1.61	4	105.00	200.00	-13.23	-10.89	-22.14	-3.75	4
105.00	210.00	-4.29	-7.28	-2.31	-1.27	4	105.00	210.00	-9.69	-7.35	-12.92	-4.27	4
105.00	220.00	-2.43	-5.67	-0.62	-1.16	4	105.00	220.00	-10.36	-3.85	-7.64	-4.63	4

105.00	230.00	-2.27	-4.59	0.90	-1.81	4	105.00	230.00	-13.16	-2.04	-4.56	-5.60	4
105.00	240.00	-2.92	-4.18	1.59	-1.77	4	105.00	240.00	-9.18	-0.69	-9.10	-10.27	4
105.00	250.00	-4.89	-8.12	0.08	-3.20	4	105.00	250.00	-6.53	0.30	-22.87	-9.71	4
105.00	260.00	-6.19	-21.47	-1.43	-6.58	4	105.00	260.00	-6.15	0.75	-14.11	-11.05	4
105.00	270.00	-5.99	-26.94	-3.06	-5.73	4	105.00	270.00	-5.76	2.09	-16.08	-12.82	4
105.00	280.00	-4.66	-23.12	-0.99	-4.69	4	105.00	280.00	-6.09	2.56	-12.36	-31.96	4
105.00	290.00	-4.76	-17.14	1.02	-9.71	4	105.00	290.00	-6.10	2.12	-16.10	-19.16	4
105.00	300.00	-5.51	-20.24	-0.20	-16.32	4	105.00	300.00	-8.01	2.51	-13.27	-13.20	4
105.00	310.00	-2.57	-7.42	-1.90	-15.70	4	105.00	310.00	-11.24	3.63	-10.11	-17.77	4
105.00	320.00	-2.71	-6.65	-3.11	-12.49	4	105.00	320.00	-21.14	3.49	-13.57	-17.64	4
105.00	330.00	-4.31	-13.98	-4.01	-16.68	4	105.00	330.00	-33.60	1.22	-15.00	-10.71	4
105.00	340.00	-1.19	-27.11	-6.57	-13.90	4	105.00	340.00	-27.95	-1.44	-16.45	-10.44	4
105.00	350.00	1.16	-46.07	-9.21	-15.17	4	105.00	350.00	-27.86	-2.52	-17.85	-10.75	4
120.00	0.00	-5.49	-18.23	-11.95	-17.41	4	120.00	0.00	-6.51	-4.34	-17.62	-8.10	4
120.00	10.00	-5.56	-16.14	-11.52	-12.92	4	120.00	10.00	-4.48	-4.23	-13.97	-8.25	4
120.00	20.00	-11.38	-15.68	-10.57	-8.67	4	120.00	20.00	-2.79	-4.28	-13.55	-5.50	4
120.00	30.00	-12.49	-10.29	-16.20	-7.66	4	120.00	30.00	-1.98	-5.12	-30.40	-3.84	4
120.00	40.00	-2.65	-6.37	-11.45	-8.39	4	120.00	40.00	-1.21	-5.79	-14.88	-3.57	4
120.00	50.00	-0.41	-5.15	-6.31	-8.92	4	120.00	50.00	-1.27	-5.25	-9.46	-5.33	4
120.00	60.00	-2.70	-5.09	-7.11	-6.89	4	120.00	60.00	-0.93	-4.71	-11.77	-15.39	4
120.00	70.00	-10.12	-4.45	-5.67	-4.08	4	120.00	70.00	-1.78	-7.33	-14.63	-17.08	4
120.00	80.00	-9.97	-6.38	-3.11	-2.26	4	120.00	80.00	-1.98	-7.54	-13.56	-11.54	4
120.00	90.00	-7.30	-8.21	-2.24	-0.33	4	120.00	90.00	-0.96	-4.40	-13.76	-17.08	4
120.00	100.00	-6.12	-6.09	-1.01	0.65	4	120.00	100.00	-1.82	-4.29	-16.19	-23.85	4
120.00	110.00	-4.34	-6.91	-2.29	-1.07	4	120.00	110.00	-2.81	-2.64	-19.58	-15.24	4
120.00	120.00	-5.20	-6.31	-3.11	-1.02	4	120.00	120.00	-5.25	-2.34	-22.21	-11.22	4
120.00	130.00	-9.08	-9.74	-2.25	-1.99	4	120.00	130.00	-4.78	-7.35	-16.63	-14.40	4
120.00	140.00	-7.71	-21.41	-4.01	-1.45	4	120.00	140.00	-7.40	-3.71	-3.82	-20.52	4
120.00	150.00	-3.17	-10.42	-5.62	-1.22	4	120.00	150.00	-16.38	-1.72	-1.99	-16.92	4
120.00	160.00	-0.70	-8.74	-4.93	-2.59	4	120.00	160.00	-10.21	-4.06	-2.63	-14.15	4
120.00	170.00	-0.38	-11.80	-5.06	-3.65	4	120.00	170.00	-6.64	-6.86	-3.09	-11.76	4
120.00	180.00	-1.46	-19.68	-5.50	-3.33	4	120.00	180.00	-6.00	-5.37	-3.97	-9.76	4
120.00	190.00	-3.48	-15.25	-6.22	-3.75	4	120.00	190.00	-8.04	-4.14	-5.84	-7.66	4
120.00	200.00	-7.84	-9.37	-7.45	-4.69	4	120.00	200.00	-18.05	-6.20	-9.91	-6.80	4
120.00	210.00	-18.21	-12.74	-7.77	-5.66	4	120.00	210.00	-15.51	-12.97	-12.60	-8.98	4
120.00	220.00	-9.34	-21.63	-6.41	-5.12	4	120.00	220.00	-9.64	-13.94	-7.90	-10.30	4
120.00	230.00	-4.80	-9.81	-3.15	-3.23	4	120.00	230.00	-9.94	-7.68	-6.83	-7.73	4
120.00	240.00	-3.19	-12.11	-0.20	-2.28	4	120.00	240.00	-10.40	-3.78	-8.12	-8.55	4
120.00	250.00	-3.26	-22.20	0.36	-2.67	4	120.00	250.00	-12.40	-0.96	-9.90	-12.65	4
120.00	260.00	-3.86	-10.06	-0.74	-2.05	4	120.00	260.00	-10.45	0.88	-8.34	-12.47	4
120.00	270.00	-4.17	-9.58	-1.92	-4.10	4	120.00	270.00	-10.86	1.65	-8.41	-15.41	4
120.00	280.00	-3.98	-9.64	-2.27	-11.19	4	120.00	280.00	-12.44	2.20	-17.91	-24.69	4
120.00	290.00	-3.09	-10.27	-1.03	-10.68	4	120.00	290.00	-9.31	2.17	-16.83	-18.52	4
120.00	300.00	-3.17	-8.03	-1.83	-6.76	4	120.00	300.00	-10.77	1.45	-13.92	-21.63	4
120.00	310.00	-4.01	-6.24	-3.92	-6.06	4	120.00	310.00	-10.67	0.75	-7.43	-22.15	4
120.00	320.00	-5.13	-7.53	-6.14	-7.94	4	120.00	320.00	-7.69	1.27	-7.02	-14.38	4
120.00	330.00	-9.60	-10.93	-6.12	-12.09	4	120.00	330.00	-8.46	0.66	-8.15	-12.91	4
120.00	340.00	-8.29	-7.70	-6.22	-20.77	4	120.00	340.00	-9.61	-0.95	-9.55	-8.27	4
120.00	350.00	-3.09	-7.41	-11.72	-17.11	4	120.00	350.00	-11.22	-1.64	-18.62	-6.06	4
135.00	0.00	-18.75	-6.38	-3.79	-13.89	4	135.00	0.00	-4.77	-2.88	-11.42	-8.16	4
135.00	10.00	-18.09	-10.07	-5.31	-13.50	4	135.00	10.00	-2.47	-2.62	-12.59	-6.55	4
135.00	20.00	-11.15	-15.60	-9.61	-12.43	4	135.00	20.00	-2.65	-4.46	-11.96	-7.49	4
135.00	30.00	-6.75	-6.05	-20.87	-9.43	4	135.00	30.00	-4.61	-7.86	-10.40	-10.14	4
135.00	40.00	-5.13	-4.76	-11.75	-9.89	4	135.00	40.00	-7.09	-8.59	-14.14	-12.75	4
135.00	50.00	-7.89	-6.15	-8.11	-8.44	4	135.00	50.00	-5.99	-6.64	-18.75	-15.04	4
135.00	60.00	-15.50	-6.15	-7.94	-6.81	4	135.00	60.00	-2.99	-8.22	-20.96	-13.46	4

135.00	70.00	-12.38	-6.47	-6.18	-5.64	4	135.00	70.00	-3.62	-12.09	-18.10	-14.43	4
135.00	80.00	-6.98	-7.18	-4.90	-5.54	4	135.00	80.00	-4.65	-20.77	-10.51	-10.52	4
135.00	90.00	-5.42	-3.61	-2.02	-3.97	4	135.00	90.00	-3.05	-9.24	-11.74	-14.75	4
135.00	100.00	-5.34	-1.70	-1.87	-5.16	4	135.00	100.00	-3.01	-5.56	-16.50	-20.24	4
135.00	110.00	-4.34	-3.61	-2.26	-6.09	4	135.00	110.00	-6.54	-3.53	-11.87	-8.62	4
135.00	120.00	-5.80	-9.26	-3.97	-3.78	4	135.00	120.00	-12.36	-4.70	-10.76	-5.05	4
135.00	130.00	-6.01	-13.10	-5.53	-3.57	4	135.00	130.00	-17.94	-6.50	-11.24	-8.27	4
135.00	140.00	-4.23	-11.50	-6.00	-4.33	4	135.00	140.00	-34.71	-6.90	-9.41	-11.37	4
135.00	150.00	-1.63	-19.27	-6.49	-4.13	4	135.00	150.00	-15.05	-9.20	-7.01	-7.20	4
135.00	160.00	0.13	-15.39	-7.20	-3.56	4	135.00	160.00	-8.81	-7.39	-5.88	-5.22	4
135.00	170.00	0.22	-10.89	-8.28	-3.50	4	135.00	170.00	-6.21	-5.16	-5.94	-4.95	4
135.00	180.00	-1.36	-10.40	-9.85	-3.50	4	135.00	180.00	-5.75	-4.15	-7.41	-4.87	4
135.00	190.00	-4.07	-11.17	-11.49	-3.34	4	135.00	190.00	-8.42	-4.41	-11.29	-5.43	4
135.00	200.00	-8.72	-10.78	-13.32	-3.04	4	135.00	200.00	-16.11	-5.09	-15.83	-7.08	4
135.00	210.00	-16.37	-8.25	-11.85	-2.54	4	135.00	210.00	-17.66	-7.10	-9.51	-8.45	4
135.00	220.00	-8.14	-4.88	-7.76	-2.38	4	135.00	220.00	-8.78	-8.78	-6.29	-7.81	4
135.00	230.00	-5.38	-4.08	-3.33	-2.70	4	135.00	230.00	-7.40	-6.62	-6.83	-7.41	4
135.00	240.00	-6.70	-4.40	-1.18	-1.96	4	135.00	240.00	-12.18	-3.65	-11.20	-5.96	4
135.00	250.00	-9.59	-4.83	-1.49	-1.36	4	135.00	250.00	-15.30	-1.00	-16.86	-4.72	4
135.00	260.00	-13.64	-6.65	-2.98	-2.33	4	135.00	260.00	-15.04	-0.58	-14.16	-7.90	4
135.00	270.00	-13.34	-10.70	-4.53	-5.17	4	135.00	270.00	-10.92	-3.19	-12.33	-19.50	4
135.00	280.00	-10.24	-11.20	-5.25	-6.78	4	135.00	280.00	-9.49	-1.69	-10.83	-31.15	4
135.00	290.00	-9.78	-8.20	-4.24	-6.13	4	135.00	290.00	-13.82	0.91	-14.06	-17.97	4
135.00	300.00	-8.73	-6.94	-5.44	-3.98	4	135.00	300.00	-13.04	1.18	-14.72	-13.30	4
135.00	310.00	-8.49	-6.93	-8.87	-3.84	4	135.00	310.00	-8.41	-0.38	-6.70	-14.55	4
135.00	320.00	-9.53	-7.47	-7.56	-6.71	4	135.00	320.00	-9.36	-2.07	-7.36	-13.62	4
135.00	330.00	-11.30	-8.08	-8.66	-14.71	4	135.00	330.00	-17.18	-1.49	-11.14	-10.69	4
135.00	340.00	-12.70	-11.25	-8.75	-19.84	4	135.00	340.00	-18.52	-2.30	-13.02	-9.79	4
135.00	350.00	-10.24	-15.16	-8.33	-16.88	4	135.00	350.00	-14.06	-3.47	-13.87	-9.82	4
150.00	0.00	-8.49	-11.54	-17.28	-13.98	4	150.00	0.00	-5.85	-4.66	-11.95	-7.06	4
150.00	10.00	-8.99	-15.14	-17.41	-13.13	4	150.00	10.00	-4.47	-5.29	-11.26	-6.43	4
150.00	20.00	-10.42	-19.29	-16.30	-12.86	4	150.00	20.00	-2.39	-6.79	-9.64	-5.40	4
150.00	30.00	-20.31	-12.49	-20.41	-12.82	4	150.00	30.00	-0.87	-9.29	-8.22	-5.67	4
150.00	40.00	-12.48	-9.10	-16.36	-15.51	4	150.00	40.00	-1.10	-11.44	-7.38	-8.08	4
150.00	50.00	-5.71	-7.97	-12.28	-20.11	4	150.00	50.00	-3.88	-11.09	-7.03	-11.70	4
150.00	60.00	-3.63	-8.15	-9.68	-22.52	4	150.00	60.00	-6.54	-10.85	-6.61	-14.56	4
150.00	70.00	-4.43	-10.18	-7.26	-20.58	4	150.00	70.00	-4.13	-9.39	-6.72	-15.61	4
150.00	80.00	-6.07	-15.06	-4.88	-14.85	4	150.00	80.00	-1.65	-6.22	-7.60	-17.37	4
150.00	90.00	-5.47	-9.39	-2.58	-11.29	4	150.00	90.00	-1.84	-5.80	-9.21	-17.87	4
150.00	100.00	-4.01	-6.43	-1.62	-11.14	4	150.00	100.00	-3.63	-7.96	-12.89	-17.36	4
150.00	110.00	-4.52	-7.56	-2.21	-11.58	4	150.00	110.00	-4.91	-8.28	-16.13	-19.53	4
150.00	120.00	-5.76	-11.15	-3.11	-8.11	4	150.00	120.00	-5.27	-4.98	-14.64	-19.22	4
150.00	130.00	-6.11	-8.19	-3.98	-7.31	4	150.00	130.00	-5.46	-3.18	-13.93	-12.69	4
150.00	140.00	-5.35	-5.73	-5.63	-9.79	4	150.00	140.00	-5.53	-2.55	-13.93	-9.05	4
150.00	150.00	-3.70	-6.24	-13.16	-11.88	4	150.00	150.00	-5.51	-2.27	-11.28	-6.21	4
150.00	160.00	-2.52	-7.93	-14.03	-10.21	4	150.00	160.00	-5.47	-3.06	-13.36	-5.08	4
150.00	170.00	-2.11	-7.55	-13.49	-7.63	4	150.00	170.00	-4.90	-5.92	-15.64	-5.39	4
150.00	180.00	-2.45	-5.48	-12.09	-5.74	4	150.00	180.00	-3.71	-9.78	-17.35	-6.99	4
150.00	190.00	-3.81	-4.51	-11.51	-5.02	4	150.00	190.00	-3.39	-10.63	-14.88	-9.71	4
150.00	200.00	-6.64	-4.11	-11.43	-4.57	4	150.00	200.00	-4.71	-10.66	-12.25	-13.08	4
150.00	210.00	-11.87	-5.00	-10.03	-4.60	4	150.00	210.00	-6.54	-12.81	-10.01	-12.93	4
150.00	220.00	-12.10	-6.10	-8.30	-4.47	4	150.00	220.00	-6.82	-15.16	-9.32	-8.71	4
150.00	230.00	-6.15	-7.34	-6.51	-3.67	4	150.00	230.00	-5.01	-12.99	-9.09	-6.19	4
150.00	240.00	-3.63	-7.54	-5.31	-3.25	4	150.00	240.00	-3.94	-9.72	-9.24	-5.36	4
150.00	250.00	-3.94	-7.73	-4.47	-3.22	4	150.00	250.00	-4.05	-6.98	-11.47	-6.26	4
150.00	260.00	-6.55	-9.43	-4.27	-3.35	4	150.00	260.00	-5.46	-4.77	-18.58	-9.24	4

150.00	270.00	-11.86	-11.80	-3.69	-3.38	4	150.00	270.00	-9.48	-3.74	-17.73	-16.65	4
150.00	280.00	-20.72	-17.59	-4.04	-2.33	4	150.00	280.00	-14.26	-3.58	-14.04	-19.38	4
150.00	290.00	-19.58	-17.84	-5.92	-2.07	4	150.00	290.00	-14.11	-2.59	-8.87	-14.88	4
150.00	300.00	-12.68	-10.62	-8.85	-2.96	4	150.00	300.00	-12.30	0.72	-7.15	-17.02	4
150.00	310.00	-9.41	-6.40	-10.37	-4.56	4	150.00	310.00	-6.71	2.84	-8.77	-13.97	4
150.00	320.00	-11.92	-4.32	-10.42	-5.93	4	150.00	320.00	-4.69	3.32	-14.69	-8.88	4
150.00	330.00	-27.42	-3.85	-10.51	-6.85	4	150.00	330.00	-6.35	2.27	-14.91	-6.61	4
150.00	340.00	-15.35	-4.41	-10.59	-8.45	4	150.00	340.00	-11.96	-0.57	-11.79	-6.37	4
150.00	350.00	-10.78	-5.83	-11.19	-10.77	4	150.00	350.00	-12.42	-3.67	-12.57	-6.99	4
165.00	0.00	-4.27	-0.85	-15.59	-17.46	4	165.00	0.00	-6.17	-4.24	-12.04	-7.47	4
165.00	10.00	-4.50	-1.62	-14.69	-24.33	4	165.00	10.00	-4.01	-7.20	-11.26	-8.90	4
165.00	20.00	-5.26	-2.38	-13.39	-23.58	4	165.00	20.00	-2.74	-9.18	-11.75	-10.93	4
165.00	30.00	-8.18	-3.05	-11.56	-19.15	4	165.00	30.00	-1.98	-9.73	-11.41	-12.66	4
165.00	40.00	-14.16	-3.71	-9.25	-17.79	4	165.00	40.00	-1.50	-10.29	-10.64	-14.08	4
165.00	50.00	-18.79	-3.80	-7.56	-17.88	4	165.00	50.00	-1.45	-10.50	-11.24	-14.69	4
165.00	60.00	-11.52	-3.67	-6.68	-20.34	4	165.00	60.00	-1.77	-10.57	-12.47	-14.54	4
165.00	70.00	-7.97	-3.44	-6.05	-30.84	4	165.00	70.00	-2.25	-11.92	-12.93	-15.16	4
165.00	80.00	-6.85	-3.02	-5.61	-23.65	4	165.00	80.00	-2.27	-13.48	-12.97	-19.73	4
165.00	90.00	-6.58	-2.56	-2.44	-21.50	4	165.00	90.00	-2.07	-15.25	-14.24	-20.10	4
165.00	100.00	-6.06	-2.67	-4.21	-15.25	4	165.00	100.00	-2.41	-16.00	-28.74	-16.84	4
165.00	110.00	-4.87	-3.57	-6.63	-13.96	4	165.00	110.00	-3.29	-10.85	-24.81	-15.68	4
165.00	120.00	-3.63	-5.55	-8.94	-13.99	4	165.00	120.00	-5.11	-7.42	-19.71	-15.95	4
165.00	130.00	-2.41	-8.62	-10.68	-14.24	4	165.00	130.00	-6.62	-6.34	-19.37	-17.03	4
165.00	140.00	-1.87	-12.27	-11.82	-12.97	4	165.00	140.00	-6.32	-6.73	-20.19	-15.92	4
165.00	150.00	-1.62	-18.61	-11.71	-11.53	4	165.00	150.00	-5.07	-7.90	-20.31	-14.17	4
165.00	160.00	-2.21	-49.41	-11.24	-10.13	4	165.00	160.00	-3.70	-9.36	-19.22	-12.63	4
165.00	170.00	-3.94	-18.61	-10.37	-8.81	4	165.00	170.00	-2.82	-11.37	-16.18	-12.21	4
165.00	180.00	-7.49	-13.48	-9.68	-7.34	4	165.00	180.00	-2.83	-13.38	-12.48	-13.88	4
165.00	190.00	-15.70	-11.59	-9.17	-6.65	4	165.00	190.00	-3.47	-16.57	-9.24	-18.46	4
165.00	200.00	-13.83	-11.08	-9.14	-6.00	4	165.00	200.00	-4.77	-19.48	-7.76	-23.12	4
165.00	210.00	-6.12	-10.43	-10.13	-6.00	4	165.00	210.00	-5.92	-24.55	-7.52	-22.44	4
165.00	220.00	-3.08	-9.93	-10.70	-6.91	4	165.00	220.00	-5.88	-24.98	-7.81	-22.11	4
165.00	230.00	-1.56	-9.84	-11.06	-7.29	4	165.00	230.00	-5.53	-15.30	-8.68	-17.54	4
165.00	240.00	-1.45	-11.05	-10.44	-7.82	4	165.00	240.00	-5.29	-10.31	-10.59	-14.47	4
165.00	250.00	-2.20	-11.95	-10.39	-8.41	4	165.00	250.00	-5.45	-7.16	-11.92	-14.00	4
165.00	260.00	-3.79	-12.41	-10.24	-8.30	4	165.00	260.00	-5.67	-4.42	-11.70	-12.97	4
165.00	270.00	-5.79	-12.99	-10.94	-7.41	4	165.00	270.00	-6.50	-2.65	-10.56	-13.68	4
165.00	280.00	-8.36	-13.99	-12.27	-7.06	4	165.00	280.00	-7.37	-1.14	-10.57	-16.34	4
165.00	290.00	-10.50	-17.16	-13.50	-7.78	4	165.00	290.00	-8.52	0.13	-12.85	-18.48	4
165.00	300.00	-12.01	-29.86	-15.51	-8.62	4	165.00	300.00	-9.31	1.42	-14.24	-18.56	4
165.00	310.00	-12.96	-14.13	-20.48	-9.74	4	165.00	310.00	-9.46	2.32	-11.75	-16.39	4
165.00	320.00	-12.57	-7.29	-24.49	-10.02	4	165.00	320.00	-9.75	2.72	-9.51	-13.81	4
165.00	330.00	-10.49	-3.60	-19.34	-10.37	4	165.00	330.00	-10.52	2.35	-11.08	-11.24	4
165.00	340.00	-8.32	-1.87	-16.73	-11.22	4	165.00	340.00	-11.59	1.35	-13.69	-9.36	4
165.00	350.00	-6.88	-1.44	-16.89	-12.15	4	165.00	350.00	-11.46	0.53	-16.42	-8.93	4
180.00	0.00	-12.39	-3.96	-11.27	-18.29	4	180.00	0.00	-5.42	-6.65	-17.35	-14.22	4
180.00	10.00	-12.34	-3.63	-11.43	-18.89	4	180.00	10.00	-5.25	-7.24	-17.50	-13.40	4
180.00	20.00	-12.57	-3.06	-11.24	-17.59	4	180.00	20.00	-5.32	-8.69	-16.90	-14.37	4
180.00	30.00	-13.02	-2.88	-11.38	-16.83	4	180.00	30.00	-5.44	-10.49	-14.73	-15.20	4
180.00	40.00	-12.93	-2.79	-11.41	-15.46	4	180.00	40.00	-5.86	-11.30	-12.81	-16.24	4
180.00	50.00	-11.98	-2.74	-12.47	-14.67	4	180.00	50.00	-6.33	-11.86	-12.13	-17.86	4
180.00	60.00	-10.88	-3.38	-15.28	-13.97	4	180.00	60.00	-6.97	-10.71	-11.62	-20.91	4
180.00	70.00	-9.82	-4.20	-18.39	-13.79	4	180.00	70.00	-8.29	-8.47	-10.48	-26.74	4
180.00	80.00	-8.73	-5.50	-22.80	-14.54	4	180.00	80.00	-9.69	-6.93	-10.19	-23.60	4
180.00	90.00	-7.60	-6.51	-22.06	-15.83	4	180.00	90.00	-11.11	-5.72	-10.32	-20.27	4
180.00	100.00	-6.67	-7.78	-20.69	-17.77	4	180.00	100.00	-13.27	-4.93	-10.16	-18.20	4

180.00	110.00	-5.94	-9.71	-18.92	-21.07	4	180.00	110.00	-15.19	-4.42	-10.81	-18.22	4
180.00	120.00	-5.72	-11.69	-16.73	-17.52	4	180.00	120.00	-14.96	-4.26	-11.60	-19.04	4
180.00	130.00	-5.59	-12.26	-15.05	-13.28	4	180.00	130.00	-12.88	-4.25	-12.65	-21.94	4
180.00	140.00	-5.91	-11.12	-14.42	-11.83	4	180.00	140.00	-10.27	-4.56	-15.23	-24.30	4
180.00	150.00	-6.69	-9.69	-12.35	-11.54	4	180.00	150.00	-8.51	-5.39	-12.73	-25.84	4
180.00	160.00	-7.76	-8.52	-13.24	-12.28	4	180.00	160.00	-6.95	-6.80	-11.91	-24.05	4
180.00	170.00	-9.78	-7.60	-15.58	-13.60	4	180.00	170.00	-5.92	-7.92	-10.32	-22.44	4
180.00	180.00	-13.89	-6.76	-17.33	-14.73	4	180.00	180.00	-5.51	-9.35	-9.57	-23.64	4
180.00	190.00	-21.93	-6.04	-21.45	-15.38	4	180.00	190.00	-5.82	-10.90	-9.57	-21.68	4
180.00	200.00	-25.57	-5.51	-27.40	-15.60	4	180.00	200.00	-5.89	-11.30	-9.08	-18.84	4
180.00	210.00	-14.94	-4.75	-21.27	-15.59	4	180.00	210.00	-6.35	-12.47	-10.38	-17.34	4
180.00	220.00	-11.04	-4.27	-15.62	-15.55	4	180.00	220.00	-7.22	-12.35	-10.69	-16.29	4
180.00	230.00	-8.88	-3.99	-12.06	-15.93	4	180.00	230.00	-8.64	-12.74	-10.17	-17.42	4
180.00	240.00	-7.62	-3.83	-9.62	-14.36	4	180.00	240.00	-10.76	-12.03	-10.52	-17.56	4
180.00	250.00	-6.49	-3.72	-7.77	-13.46	4	180.00	250.00	-13.25	-10.77	-11.90	-19.47	4
180.00	260.00	-5.49	-3.95	-7.68	-11.92	4	180.00	260.00	-15.89	-9.02	-14.71	-18.98	4
180.00	270.00	-5.00	-4.45	-7.92	-11.70	4	180.00	270.00	-17.85	-7.23	-19.45	-18.00	4
180.00	280.00	-4.57	-5.35	-9.16	-12.08	4	180.00	280.00	-16.70	-6.04	-22.50	-17.49	4
180.00	290.00	-4.37	-6.52	-11.59	-13.20	4	180.00	290.00	-13.41	-5.10	-19.84	-17.80	4
180.00	300.00	-4.78	-8.22	-12.95	-14.85	4	180.00	300.00	-10.96	-4.21	-18.60	-16.55	4
180.00	310.00	-5.45	-9.96	-13.07	-17.16	4	180.00	310.00	-9.27	-3.57	-21.04	-14.80	4
180.00	320.00	-6.63	-11.74	-10.91	-19.97	4	180.00	320.00	-7.93	-3.37	-27.09	-13.98	4
180.00	330.00	-7.43	-11.17	-10.77	-25.94	4	180.00	330.00	-6.94	-3.38	-27.99	-13.67	4
180.00	340.00	-8.56	-9.42	-11.00	-28.93	4	180.00	340.00	-6.21	-3.27	-25.29	-13.88	4
180.00	350.00	-9.32	-6.73	-11.19	-21.31	4	180.00	350.00	-5.70	-3.80	-20.12	-13.33	4

5300MHz

Theta Plorization							Phi Plorization						
Angle (θ)	Angle (ψ)	Max Gain(dBi)				N_{ANT}	Angle (θ)	Angle (ψ)	Max Gain(dBi)				N_{ANT}
		Ant 1(G1)	Ant 2(G2)	Ant 3(G3)	Ant 4(G4)				Ant 1(G1)	Ant 2(G2)	Ant 3(G3)	Ant 4(G4)	
0.00	0.00	-0.52	-1.19	-16.53	-5.06	4	0.00	0.00	-7.85	-1.19	1.31	3.15	4
0.00	10.00	-0.60	-0.55	-22.06	-6.97	4	0.00	10.00	-6.97	-1.97	1.42	3.44	4
0.00	20.00	-0.94	0.31	-16.68	-12.67	4	0.00	20.00	-5.23	-3.80	1.59	3.72	4
0.00	30.00	-1.67	0.92	-9.13	-17.33	4	0.00	30.00	-3.65	-6.12	1.20	3.99	4
0.00	40.00	-2.63	1.20	-6.23	-9.46	4	0.00	40.00	-2.14	-8.06	0.39	3.89	4
0.00	50.00	-4.10	1.42	-3.82	-5.04	4	0.00	50.00	-1.04	-8.89	-0.30	3.27	4
0.00	60.00	-6.12	1.49	-1.73	-2.16	4	0.00	60.00	-0.36	-8.80	-1.46	2.43	4
0.00	70.00	-8.59	1.51	-0.30	-0.24	4	0.00	70.00	-0.02	-6.36	-3.65	1.11	4
0.00	80.00	-9.74	0.90	0.48	1.09	4	0.00	80.00	0.20	-3.93	-6.80	-0.54	4
0.00	90.00	-9.33	-0.02	0.80	1.97	4	0.00	90.00	0.16	-2.30	-11.38	-2.89	4
0.00	100.00	-7.27	-1.41	1.19	2.63	4	0.00	100.00	-0.15	-1.37	-22.78	-6.26	4
0.00	110.00	-5.15	-3.09	1.29	2.93	4	0.00	110.00	-0.76	-0.52	-14.17	-11.66	4
0.00	120.00	-3.67	-5.30	1.11	2.91	4	0.00	120.00	-1.63	0.40	-7.56	-16.15	4
0.00	130.00	-2.57	-7.25	0.31	2.75	4	0.00	130.00	-2.84	1.00	-4.21	-10.35	4
0.00	140.00	-1.72	-9.23	-0.79	2.47	4	0.00	140.00	-4.44	1.29	-2.05	-5.52	4
0.00	150.00	-1.16	-9.23	-2.47	2.00	4	0.00	150.00	-5.98	1.28	-0.37	-2.96	4
0.00	160.00	-1.01	-7.47	-4.42	0.99	4	0.00	160.00	-6.99	1.01	0.88	-1.54	4
0.00	170.00	-1.32	-5.21	-6.94	-0.27	4	0.00	170.00	-7.19	0.61	1.23	0.00	4
0.00	180.00	-1.68	-3.27	-10.94	-2.00	4	0.00	180.00	-6.30	-0.23	1.21	1.44	4
0.00	190.00	-2.26	-1.73	-19.29	-4.44	4	0.00	190.00	-5.31	-1.23	1.38	2.04	4
0.00	200.00	-3.13	-0.64	-20.00	-8.79	4	0.00	200.00	-4.43	-2.43	2.00	1.79	4
0.00	210.00	-3.69	0.21	-10.79	-15.58	4	0.00	210.00	-3.58	-4.71	1.65	2.03	4
0.00	220.00	-4.35	0.65	-6.56	-11.19	4	0.00	220.00	-2.84	-7.33	0.45	2.75	4
0.00	230.00	-5.32	0.96	-3.66	-6.00	4	0.00	230.00	-2.20	-9.47	-0.65	2.82	4
0.00	240.00	-6.29	1.05	-1.90	-2.99	4	0.00	240.00	-1.83	-9.51	-1.85	2.15	4
0.00	250.00	-7.21	0.94	-0.71	-0.80	4	0.00	250.00	-1.66	-7.23	-3.43	0.74	4
0.00	260.00	-8.14	0.60	0.25	0.94	4	0.00	260.00	-1.51	-4.80	-5.93	-1.07	4
0.00	270.00	-8.51	-0.31	0.96	2.24	4	0.00	270.00	-1.22	-2.70	-10.59	-3.49	4
0.00	280.00	-8.27	-1.62	1.18	3.01	4	0.00	280.00	-1.14	-1.00	-21.98	-7.09	4
0.00	290.00	-7.25	-3.18	1.03	3.36	4	0.00	290.00	-1.29	0.04	-19.14	-13.47	4
0.00	300.00	-6.02	-5.22	0.50	3.33	4	0.00	300.00	-1.43	0.75	-8.85	-18.47	4
0.00	310.00	-4.61	-7.41	-0.13	3.00	4	0.00	310.00	-1.90	1.19	-4.85	-9.49	4
0.00	320.00	-3.48	-9.23	-1.22	2.54	4	0.00	320.00	-2.64	1.35	-2.25	-4.44	4
0.00	330.00	-2.44	-8.68	-2.66	1.78	4	0.00	330.00	-3.87	1.46	-0.91	-0.98	4
0.00	340.00	-1.77	-6.72	-4.51	0.75	4	0.00	340.00	-5.57	1.32	-0.42	1.30	4
0.00	350.00	-1.09	-4.34	-6.85	-0.84	4	0.00	350.00	-7.37	0.85	0.04	2.57	4
15.00	0.00	1.10	-5.19	-14.42	-5.64	4	15.00	0.00	-5.50	-2.49	0.23	3.59	4
15.00	10.00	0.92	-3.23	-15.90	-10.50	4	15.00	10.00	-3.73	-4.12	-0.66	3.72	4
15.00	20.00	0.37	-1.85	-12.72	-15.42	4	15.00	20.00	-2.29	-6.49	-1.40	3.30	4
15.00	30.00	-0.21	-0.30	-8.54	-10.88	4	15.00	30.00	-1.16	-10.18	-2.18	2.68	4
15.00	40.00	-1.19	0.93	-6.05	-6.27	4	15.00	40.00	-0.53	-12.91	-4.43	1.96	4
15.00	50.00	-2.40	1.17	-4.10	-3.16	4	15.00	50.00	0.15	-8.35	-6.48	1.23	4
15.00	60.00	-4.15	0.67	-2.96	-0.96	4	15.00	60.00	0.67	-5.05	-7.14	0.51	4
15.00	70.00	-7.54	-0.28	-1.95	0.68	4	15.00	70.00	1.23	-2.38	-7.94	-0.66	4
15.00	80.00	-13.70	-1.40	-1.21	1.81	4	15.00	80.00	1.53	-0.75	-10.92	-2.51	4
15.00	90.00	-14.91	-2.79	-0.62	2.04	4	15.00	90.00	1.54	-0.06	-16.72	-4.81	4
15.00	100.00	-7.73	-4.08	-1.05	1.76	4	15.00	100.00	0.88	-0.12	-20.56	-7.75	4
15.00	110.00	-4.28	-5.40	-1.28	1.35	4	15.00	110.00	-0.21	-0.52	-12.19	-10.89	4
15.00	120.00	-2.31	-7.08	-1.26	0.73	4	15.00	120.00	-2.10	-0.86	-7.51	-11.70	4
15.00	130.00	-1.41	-9.08	-1.57	0.20	4	15.00	130.00	-4.57	-0.83	-4.72	-8.35	4
15.00	140.00	-1.14	-12.59	-2.55	-0.44	4	15.00	140.00	-7.34	-0.79	-2.34	-4.89	4

15.00	150.00	-1.51	-15.66	-4.10	-1.34	4	15.00	150.00	-8.23	-0.84	-0.77	-2.50	4
15.00	160.00	-2.32	-11.78	-6.40	-2.68	4	15.00	160.00	-7.23	-1.17	0.30	-0.92	4
15.00	170.00	-3.41	-7.60	-8.92	-4.33	4	15.00	170.00	-5.71	-2.03	0.84	0.09	4
15.00	180.00	-4.56	-4.97	-10.11	-7.09	4	15.00	180.00	-4.24	-3.58	0.96	0.72	4
15.00	190.00	-6.18	-3.03	-8.76	-12.13	4	15.00	190.00	-3.42	-5.68	1.10	0.31	4
15.00	200.00	-8.50	-1.91	-7.11	-20.55	4	15.00	200.00	-2.95	-8.50	1.24	-0.42	4
15.00	210.00	-12.40	-1.11	-5.19	-15.63	4	15.00	210.00	-2.35	-12.59	0.69	-1.23	4
15.00	220.00	-21.50	-0.60	-3.41	-12.62	4	15.00	220.00	-1.80	-20.25	-0.71	-1.66	4
15.00	230.00	-19.07	-0.37	-1.74	-11.28	4	15.00	230.00	-1.51	-14.28	-2.17	-2.13	4
15.00	240.00	-11.23	-0.42	-0.09	-8.82	4	15.00	240.00	-2.16	-8.04	-3.53	-2.81	4
15.00	250.00	-7.35	-0.51	1.13	-5.79	4	15.00	250.00	-3.12	-4.68	-5.50	-4.13	4
15.00	260.00	-5.12	-0.82	1.77	-3.54	4	15.00	260.00	-4.80	-2.19	-8.75	-6.81	4
15.00	270.00	-4.12	-1.46	1.89	-2.10	4	15.00	270.00	-7.04	-0.17	-15.68	-10.06	4
15.00	280.00	-3.66	-2.60	1.75	-1.42	4	15.00	280.00	-8.69	1.21	-15.79	-16.06	4
15.00	290.00	-3.86	-4.44	1.40	-0.58	4	15.00	290.00	-7.21	1.93	-8.97	-22.79	4
15.00	300.00	-3.68	-7.00	0.68	0.32	4	15.00	300.00	-5.30	2.15	-5.80	-11.52	4
15.00	310.00	-3.29	-10.04	0.00	0.75	4	15.00	310.00	-4.05	1.98	-3.84	-6.35	4
15.00	320.00	-2.30	-12.86	-1.09	0.80	4	15.00	320.00	-3.88	1.45	-2.19	-3.17	4
15.00	330.00	-1.28	-12.73	-2.84	0.37	4	15.00	330.00	-4.07	0.68	-1.00	-0.74	4
15.00	340.00	-0.28	-10.50	-5.59	-0.30	4	15.00	340.00	-4.93	0.09	-0.33	0.94	4
15.00	350.00	0.02	-9.22	-7.22	-0.98	4	15.00	350.00	-5.50	-0.37	-0.11	1.60	4
30.00	0.00	1.41	-5.82	-14.27	-13.12	4	30.00	0.00	-3.66	-3.25	0.45	-2.75	4
30.00	10.00	1.64	-5.49	-24.34	-14.57	4	30.00	10.00	-3.57	-3.60	0.26	-2.98	4
30.00	20.00	1.59	-5.11	-14.13	-11.81	4	30.00	20.00	-3.07	-4.54	-0.38	-3.17	4
30.00	30.00	1.06	-4.91	-7.69	-7.20	4	30.00	30.00	-2.63	-5.64	-1.76	-3.59	4
30.00	40.00	0.16	-4.01	-5.22	-4.92	4	30.00	40.00	-1.66	-6.79	-4.69	-4.71	4
30.00	50.00	-1.42	-3.35	-4.59	-3.46	4	30.00	50.00	-0.37	-10.06	-7.89	-4.95	4
30.00	60.00	-3.97	-3.21	-4.87	-1.98	4	30.00	60.00	0.45	-10.21	-9.53	-3.21	4
30.00	70.00	-9.22	-4.09	-5.36	-0.18	4	30.00	70.00	0.72	-6.63	-12.27	-3.01	4
30.00	80.00	-19.23	-4.92	-4.19	0.78	4	30.00	80.00	-0.11	-3.27	-13.96	-4.47	4
30.00	90.00	-29.15	-4.93	-2.61	1.34	4	30.00	90.00	-1.52	-1.53	-15.74	-5.62	4
30.00	100.00	-17.45	-5.81	-1.83	1.54	4	30.00	100.00	-2.12	-1.07	-22.49	-6.47	4
30.00	110.00	-11.48	-6.49	-2.61	0.81	4	30.00	110.00	-2.11	-1.01	-14.87	-7.36	4
30.00	120.00	-7.26	-7.16	-3.42	0.69	4	30.00	120.00	-2.52	-2.09	-9.11	-9.73	4
30.00	130.00	-4.82	-7.31	-3.74	1.12	4	30.00	130.00	-4.27	-4.67	-5.95	-6.84	4
30.00	140.00	-4.07	-7.97	-6.00	0.64	4	30.00	140.00	-7.08	-6.08	-5.20	-3.78	4
30.00	150.00	-4.27	-8.85	-8.43	-1.15	4	30.00	150.00	-10.89	-5.57	-4.10	-2.25	4
30.00	160.00	-4.94	-10.25	-11.51	-3.12	4	30.00	160.00	-14.84	-5.08	-3.13	-1.75	4
30.00	170.00	-6.16	-10.30	-12.64	-5.25	4	30.00	170.00	-15.38	-4.21	-2.26	-1.59	4
30.00	180.00	-6.46	-7.49	-11.67	-8.16	4	30.00	180.00	-13.09	-4.33	-1.64	-1.86	4
30.00	190.00	-5.94	-5.22	-9.47	-13.36	4	30.00	190.00	-9.78	-5.91	-1.47	-2.27	4
30.00	200.00	-5.74	-3.61	-7.29	-21.32	4	30.00	200.00	-6.05	-9.85	-1.33	-2.18	4
30.00	210.00	-6.29	-3.00	-5.34	-20.23	4	30.00	210.00	-3.06	-12.36	-1.50	-2.72	4
30.00	220.00	-8.25	-2.76	-3.99	-16.46	4	30.00	220.00	-0.51	-10.88	-1.61	-3.97	4
30.00	230.00	-11.07	-3.01	-2.82	-12.54	4	30.00	230.00	0.84	-7.26	-1.90	-5.81	4
30.00	240.00	-16.13	-3.61	-1.61	-10.05	4	30.00	240.00	0.89	-5.15	-2.88	-7.58	4
30.00	250.00	-18.86	-4.44	-0.65	-9.18	4	30.00	250.00	0.08	-4.65	-5.12	-7.75	4
30.00	260.00	-12.50	-4.84	0.59	-9.38	4	30.00	260.00	-1.01	-3.99	-7.30	-6.50	4
30.00	270.00	-6.96	-4.61	1.63	-9.90	4	30.00	270.00	-1.80	-2.42	-10.87	-8.05	4
30.00	280.00	-3.93	-4.63	2.51	-9.18	4	30.00	280.00	-3.85	-0.02	-26.54	-16.08	4
30.00	290.00	-2.70	-6.08	2.81	-9.42	4	30.00	290.00	-8.44	1.92	-12.35	-15.09	4
30.00	300.00	-1.95	-9.37	2.38	-13.37	4	30.00	300.00	-15.88	2.32	-7.12	-13.05	4
30.00	310.00	-1.63	-11.91	1.37	-14.01	4	30.00	310.00	-12.87	1.68	-5.29	-14.87	4
30.00	320.00	-1.37	-12.02	0.27	-7.78	4	30.00	320.00	-8.10	0.74	-3.61	-13.39	4
30.00	330.00	-1.18	-10.32	-1.05	-5.37	4	30.00	330.00	-5.84	-0.51	-2.41	-7.95	4
30.00	340.00	-0.29	-8.69	-2.54	-5.73	4	30.00	340.00	-4.90	-1.61	-1.23	-3.50	4

30.00	350.00	0.75	-8.14	-4.55	-9.04	4	30.00	350.00	-4.71	-2.49	-0.28	-2.01	4
45.00	0.00	1.20	-9.65	-11.80	-8.84	4	45.00	0.00	-12.98	-1.03	-1.02	-13.21	4
45.00	10.00	2.02	-10.46	-26.15	-7.05	4	45.00	10.00	-8.02	-1.55	-1.47	-10.22	4
45.00	20.00	2.29	-11.65	-14.76	-6.79	4	45.00	20.00	-3.59	-2.90	-3.58	-3.44	4
45.00	30.00	1.73	-11.39	-9.18	-5.14	4	45.00	30.00	-0.74	-5.01	-6.77	-0.99	4
45.00	40.00	-0.44	-10.75	-6.44	-3.14	4	45.00	40.00	0.45	-6.71	-12.72	-1.15	4
45.00	50.00	-4.93	-10.08	-5.47	-1.95	4	45.00	50.00	0.24	-7.88	-16.67	-1.14	4
45.00	60.00	-11.20	-9.26	-6.24	0.47	4	45.00	60.00	-0.62	-6.41	-10.11	-0.60	4
45.00	70.00	-13.49	-8.86	-6.35	1.88	4	45.00	70.00	-0.67	-7.55	-11.38	-2.54	4
45.00	80.00	-20.35	-9.72	-4.40	1.21	4	45.00	80.00	-1.44	-5.95	-17.96	-6.45	4
45.00	90.00	-26.03	-8.67	-5.09	2.04	4	45.00	90.00	-3.71	-4.36	-18.04	-9.57	4
45.00	100.00	-13.29	-8.76	-6.17	1.86	4	45.00	100.00	-4.75	-2.51	-17.24	-14.28	4
45.00	110.00	-8.93	-8.73	-6.08	0.60	4	45.00	110.00	-5.24	-2.70	-13.52	-19.31	4
45.00	120.00	-8.39	-7.75	-6.08	1.43	4	45.00	120.00	-9.04	-3.22	-10.30	-15.83	4
45.00	130.00	-7.45	-6.97	-7.75	1.52	4	45.00	130.00	-15.15	-5.32	-7.41	-7.08	4
45.00	140.00	-6.53	-7.05	-10.58	0.44	4	45.00	140.00	-19.68	-6.32	-4.54	-4.25	4
45.00	150.00	-5.94	-8.44	-13.01	-0.88	4	45.00	150.00	-19.47	-4.77	-2.00	-3.77	4
45.00	160.00	-5.32	-13.18	-14.04	-2.64	4	45.00	160.00	-23.05	-3.95	-0.04	-3.40	4
45.00	170.00	-4.40	-24.76	-12.13	-4.92	4	45.00	170.00	-21.80	-4.08	0.44	-2.62	4
45.00	180.00	-3.37	-16.93	-8.73	-8.79	4	45.00	180.00	-10.09	-5.72	-0.14	-1.97	4
45.00	190.00	-3.34	-11.29	-5.60	-12.81	4	45.00	190.00	-5.03	-9.08	-0.58	-2.52	4
45.00	200.00	-3.41	-8.11	-3.84	-16.46	4	45.00	200.00	-2.09	-13.26	-0.93	-3.49	4
45.00	210.00	-2.99	-7.36	-3.07	-21.07	4	45.00	210.00	-0.21	-16.05	-1.75	-3.91	4
45.00	220.00	-3.80	-7.75	-2.23	-15.59	4	45.00	220.00	0.82	-10.92	-3.56	-4.18	4
45.00	230.00	-6.51	-9.88	-1.61	-10.66	4	45.00	230.00	1.59	-7.80	-4.24	-4.18	4
45.00	240.00	-12.21	-9.14	-0.73	-8.05	4	45.00	240.00	2.33	-6.29	-3.72	-6.48	4
45.00	250.00	-11.95	-7.88	0.42	-6.60	4	45.00	250.00	2.42	-5.19	-5.25	-18.48	4
45.00	260.00	-7.16	-8.70	1.56	-7.28	4	45.00	260.00	0.59	-5.28	-10.90	-16.81	4
45.00	270.00	-6.00	-10.19	2.56	-7.16	4	45.00	270.00	-2.60	-3.31	-26.18	-17.26	4
45.00	280.00	-5.53	-11.09	2.66	-7.71	4	45.00	280.00	-5.28	-0.17	-13.44	-10.48	4
45.00	290.00	-4.63	-11.23	2.15	-11.99	4	45.00	290.00	-9.47	1.38	-8.34	-12.76	4
45.00	300.00	-4.44	-10.11	1.53	-23.49	4	45.00	300.00	-14.50	1.00	-7.88	-16.52	4
45.00	310.00	-4.26	-10.40	0.80	-16.34	4	45.00	310.00	-14.09	-0.06	-7.60	-13.93	4
45.00	320.00	-3.77	-12.61	-0.09	-8.40	4	45.00	320.00	-15.14	-0.93	-4.98	-26.77	4
45.00	330.00	-3.33	-15.76	-1.81	-8.93	4	45.00	330.00	-13.89	-0.92	-4.23	-9.91	4
45.00	340.00	-2.27	-14.73	-3.35	-13.72	4	45.00	340.00	-12.30	-0.49	-3.61	-6.80	4
45.00	350.00	-1.82	-13.33	-4.16	-18.40	4	45.00	350.00	-12.10	-0.39	-3.03	-6.14	4
60.00	0.00	-0.37	-10.50	-6.60	-16.42	4	60.00	0.00	-11.05	-0.94	-2.67	-4.47	4
60.00	10.00	-0.28	-10.40	-8.81	-19.08	4	60.00	10.00	-10.33	-1.83	-3.20	-5.44	4
60.00	20.00	0.42	-10.52	-19.38	-18.57	4	60.00	20.00	-8.41	-3.26	-5.62	-7.45	4
60.00	30.00	0.89	-14.10	-13.42	-14.46	4	60.00	30.00	-5.96	-5.92	-10.73	-4.13	4
60.00	40.00	-0.41	-17.54	-8.48	-8.39	4	60.00	40.00	-2.68	-10.64	-16.41	-0.46	4
60.00	50.00	-3.19	-15.06	-7.92	-4.12	4	60.00	50.00	-0.62	-12.45	-7.96	-0.31	4
60.00	60.00	-4.73	-12.87	-6.65	-2.83	4	60.00	60.00	-1.47	-13.33	-8.67	-1.92	4
60.00	70.00	-8.52	-13.54	-6.27	-2.12	4	60.00	70.00	-1.82	-14.39	-10.85	-1.84	4
60.00	80.00	-13.97	-19.44	-4.62	0.12	4	60.00	80.00	-2.29	-10.33	-14.90	-3.98	4
60.00	90.00	-7.37	-19.72	-5.33	0.13	4	60.00	90.00	-5.18	-11.37	-24.34	-6.72	4
60.00	100.00	-11.33	-11.27	-6.61	0.00	4	60.00	100.00	-7.88	-8.58	-14.77	-9.60	4
60.00	110.00	-17.40	-10.87	-6.00	0.41	4	60.00	110.00	-9.03	-6.00	-12.36	-7.86	4
60.00	120.00	-9.92	-11.41	-4.75	0.45	4	60.00	120.00	-12.08	-5.29	-11.41	-8.15	4
60.00	130.00	-8.29	-11.53	-4.54	0.79	4	60.00	130.00	-7.95	-5.30	-6.77	-7.81	4
60.00	140.00	-6.62	-11.07	-5.87	0.98	4	60.00	140.00	-6.91	-5.73	-6.44	-3.71	4
60.00	150.00	-7.22	-6.69	-8.96	-0.01	4	60.00	150.00	-8.96	-5.18	-5.88	-0.60	4
60.00	160.00	-9.59	-7.22	-11.85	-1.37	4	60.00	160.00	-11.31	-1.77	-4.68	-0.37	4
60.00	170.00	-10.97	-10.32	-12.23	-3.08	4	60.00	170.00	-16.29	-1.36	-3.39	-0.25	4
60.00	180.00	-11.57	-8.77	-11.85	-4.79	4	60.00	180.00	-17.54	-3.47	-3.54	0.06	4

60.00	190.00	-11.03	-6.00	-9.00	-5.39	4	60.00	190.00	-8.63	-8.57	-4.72	0.30	4
60.00	200.00	-8.44	-6.06	-4.99	-6.82	4	60.00	200.00	-4.61	-18.56	-5.35	0.19	4
60.00	210.00	-5.62	-7.09	-1.74	-9.07	4	60.00	210.00	-2.26	-9.91	-8.17	-0.10	4
60.00	220.00	-2.93	-8.07	-0.74	-11.28	4	60.00	220.00	0.53	-5.13	-12.87	-0.57	4
60.00	230.00	-2.28	-10.54	-0.33	-14.78	4	60.00	230.00	2.13	-3.65	-13.59	-0.98	4
60.00	240.00	-3.82	-19.59	0.33	-17.24	4	60.00	240.00	2.18	-5.01	-11.47	-1.93	4
60.00	250.00	-5.61	-25.57	0.29	-14.87	4	60.00	250.00	1.87	-6.79	-7.60	-4.64	4
60.00	260.00	-6.92	-18.18	1.38	-14.45	4	60.00	260.00	1.15	-6.08	-7.76	-10.35	4
60.00	270.00	-10.50	-11.20	3.06	-16.94	4	60.00	270.00	-1.28	-6.51	-22.26	-15.03	4
60.00	280.00	-8.91	-11.58	2.02	-15.81	4	60.00	280.00	-3.63	-2.81	-19.17	-17.91	4
60.00	290.00	-6.74	-13.26	0.65	-10.98	4	60.00	290.00	-7.19	0.70	-10.82	-13.79	4
60.00	300.00	-6.61	-13.86	-0.84	-8.39	4	60.00	300.00	-7.43	1.76	-11.01	-10.50	4
60.00	310.00	-7.36	-16.57	-0.11	-7.84	4	60.00	310.00	-9.45	1.36	-11.13	-11.50	4
60.00	320.00	-8.70	-33.73	-0.16	-12.43	4	60.00	320.00	-12.58	0.98	-7.72	-8.57	4
60.00	330.00	-8.69	-18.69	-2.09	-19.92	4	60.00	330.00	-10.42	1.76	-5.30	-12.11	4
60.00	340.00	-5.33	-13.39	-3.28	-30.13	4	60.00	340.00	-10.73	2.41	-5.97	-11.92	4
60.00	350.00	-2.25	-10.91	-2.74	-20.68	4	60.00	350.00	-13.05	2.38	-6.27	-6.41	4
75.00	0.00	0.27	-13.20	-6.39	-21.17	4	75.00	0.00	-13.54	-1.24	-1.95	-7.84	4
75.00	10.00	-1.45	-17.77	-11.47	-20.56	4	75.00	10.00	-10.43	-3.75	-4.09	-6.26	4
75.00	20.00	-0.51	-18.54	-17.03	-29.68	4	75.00	20.00	-9.96	-6.44	-12.41	-1.70	4
75.00	30.00	0.24	-15.95	-11.42	-12.98	4	75.00	30.00	-9.81	-8.88	-12.76	-0.05	4
75.00	40.00	-2.84	-14.76	-9.88	-8.95	4	75.00	40.00	-4.20	-11.43	-6.53	-1.44	4
75.00	50.00	-6.59	-12.98	-9.58	-6.50	4	75.00	50.00	-1.98	-20.73	-7.28	-2.43	4
75.00	60.00	-2.9	-14.69	-12.19	-1.27	4	75.00	60.00	-2.44	-10.59	-9.66	-4.53	4
75.00	70.00	-5.29	-20.12	-9.13	0.07	4	75.00	70.00	-2.19	-7.95	-16.38	-6.91	4
75.00	80.00	-10.28	-20.29	-10.08	1.82	4	75.00	80.00	-3.79	-11.21	-17.98	-8.77	4
75.00	90.00	-14.21	-10.64	-7.33	1.42	4	75.00	90.00	-3.73	-9.47	-13.39	-8.84	4
75.00	100.00	-12.58	-7.47	-6.15	3.00	4	75.00	100.00	-9.56	-5.36	-11.76	-8.55	4
75.00	110.00	-11.4	-7.57	-5.38	1.23	4	75.00	110.00	-11.09	-2.78	-18.78	-5.90	4
75.00	120.00	-17.46	-8.75	-6.63	1.51	4	75.00	120.00	-6.94	-0.64	-9.90	-7.83	4
75.00	130.00	-23.75	-12.36	-7.08	2.12	4	75.00	130.00	-7.07	-2.31	-5.44	-6.67	4
75.00	140.00	-17.51	-8.77	-5.83	1.58	4	75.00	140.00	-8.92	-5.05	-3.39	-6.55	4
75.00	150.00	-12.13	-9.37	-5.85	0.65	4	75.00	150.00	-9.37	-3.51	-2.14	-4.94	4
75.00	160.00	-8.71	-18.91	-6.54	-0.85	4	75.00	160.00	-9.73	-3.16	-2.76	-3.17	4
75.00	170.00	-7.93	-16.87	-6.33	-1.94	4	75.00	170.00	-10.55	-4.17	-3.45	-1.79	4
75.00	180.00	-10.33	-12.76	-5.70	-2.60	4	75.00	180.00	-7.32	-7.75	-2.61	-1.42	4
75.00	190.00	-21.63	-11.03	-4.95	-3.00	4	75.00	190.00	-2.82	-11.99	-2.17	-1.89	4
75.00	200.00	-6.68	-11.36	-3.09	-3.22	4	75.00	200.00	-0.75	-6.84	-2.23	-2.14	4
75.00	210.00	-2.55	-11.49	-0.98	-2.98	4	75.00	210.00	-0.49	-3.99	-3.51	-2.43	4
75.00	220.00	-2.40	-11.99	-0.11	-3.28	4	75.00	220.00	-1.27	-2.28	-9.42	-3.06	4
75.00	230.00	-5.30	-12.94	0.62	-5.67	4	75.00	230.00	-2.65	-1.48	-24.14	-2.77	4
75.00	240.00	-7.33	-12.61	0.86	-7.40	4	75.00	240.00	-1.90	-1.98	-16.92	-3.76	4
75.00	250.00	-6.98	-11.44	0.13	-6.98	4	75.00	250.00	-1.47	-2.43	-21.08	-6.27	4
75.00	260.00	-10.05	-9.78	0.16	-10.10	4	75.00	260.00	-1.85	-4.26	-14.53	-11.77	4
75.00	270.00	-10.21	-12.96	0.53	-12.36	4	75.00	270.00	-2.84	-1.71	-18.22	-24.16	4
75.00	280.00	-6.94	-17.73	1.04	-9.65	4	75.00	280.00	-5.20	1.24	-22.55	-14.07	4
75.00	290.00	-5.33	-34.88	1.20	-11.88	4	75.00	290.00	-6.79	2.43	-11.80	-10.93	4
75.00	300.00	-2.77	-20.94	-0.91	-20.84	4	75.00	300.00	-8.99	1.73	-10.79	-8.34	4
75.00	310.00	-2.56	-17.41	-0.68	-10.97	4	75.00	310.00	-9.13	2.34	-8.29	-5.15	4
75.00	320.00	-5.36	-14.18	-2.66	-15.94	4	75.00	320.00	-5.55	3.16	-3.71	-4.21	4
75.00	330.00	-2.87	-10.69	-6.50	-14.64	4	75.00	330.00	-6.12	3.65	-4.63	-6.67	4
75.00	340.00	0.58	-10.63	-5.75	-18.09	4	75.00	340.00	-9.18	3.13	-8.00	-12.16	4
75.00	350.00	1.53	-11.55	-4.66	-17.47	4	75.00	350.00	-11.85	2.11	-8.31	-12.78	4
90.00	0.00	-0.12	-20.72	-9.93	-21.80	4	90.00	0.00	-13.41	-2.98	-3.95	-3.87	4
90.00	10.00	-2.56	-20.68	-10.63	-18.15	4	90.00	10.00	-13.16	-4.04	-3.67	-5.37	4
90.00	20.00	-5.38	-21.34	-12.64	-10.97	4	90.00	20.00	-11.36	-5.87	-7.18	-6.25	4

90.00	30.00	-2.20	-12.92	-13.31	-10.55	4	90.00	30.00	-9.46	-7.04	-13.19	-3.42	4
90.00	40.00	-0.07	-13.27	-10.03	-8.77	4	90.00	40.00	-10.27	-6.16	-5.49	-4.70	4
90.00	50.00	-1.77	-13.79	-11.02	-6.05	4	90.00	50.00	-7.39	-4.89	-8.38	-9.38	4
90.00	60.00	-3.67	-10.62	-10.42	-5.36	4	90.00	60.00	-4.9	-6.15	-9.42	-8.87	4
90.00	70.00	-2.36	-10.37	-17.04	-0.69	4	90.00	70.00	-4.75	-12.08	-7.45	-12.03	4
90.00	80.00	-7.43	-11.27	-9.32	-0.59	4	90.00	80.00	-3.25	-10.07	-25.02	-6.16	4
90.00	90.00	-13.76	-15.27	-6.69	0.62	4	90.00	90.00	-2.27	-4.94	-13.7	-12.33	4
90.00	100.00	-13.62	-11.18	-2.19	1.01	4	90.00	100.00	-2.53	-3.01	-11.33	-17.43	4
90.00	110.00	-8.88	-16.16	-3.21	2.22	4	90.00	110.00	-4.16	-1.94	-23.13	-23.11	4
90.00	120.00	-6.15	-13.33	-4.22	1.49	4	90.00	120.00	-6.45	-2.50	-16.26	-25.58	4
90.00	130.00	-7.84	-19.46	-4.67	1.37	4	90.00	130.00	-11.69	-1.97	-8.88	-11.74	4
90.00	140.00	-8.94	-17.70	-4.07	-0.68	4	90.00	140.00	-7.83	-1.30	-3.26	-21.15	4
90.00	150.00	-7.82	-15.22	-4.59	-1.44	4	90.00	150.00	-5.28	-2.54	-0.82	-11.93	4
90.00	160.00	-5.47	-22.72	-5.22	0.48	4	90.00	160.00	-6.70	-6.76	-2.27	-4.74	4
90.00	170.00	-5.33	-17.78	-4.27	-0.05	4	90.00	170.00	-10.63	-11.29	-4.85	-4.51	4
90.00	180.00	-8.54	-9.59	-3.11	-2.43	4	90.00	180.00	-14.65	-13.14	-6.62	-4.99	4
90.00	190.00	-12.02	-8.10	-2.07	-3.75	4	90.00	190.00	-11.22	-11.80	-6.13	-3.73	4
90.00	200.00	-6.89	-9.87	-1.32	-4.20	4	90.00	200.00	-6.58	-9.68	-5.67	-4.03	4
90.00	210.00	-2.36	-11.65	-0.65	-3.65	4	90.00	210.00	-2.91	-7.46	-4.65	-3.08	4
90.00	220.00	-0.48	-9.75	-0.21	-2.76	4	90.00	220.00	-1.59	-3.99	-3.43	-2.60	4
90.00	230.00	-1.06	-9.13	-0.18	-2.83	4	90.00	230.00	-3.32	-2.62	-5.56	-2.64	4
90.00	240.00	-2.25	-7.23	-0.07	-1.82	4	90.00	240.00	-6.27	-0.60	-11.10	-3.00	4
90.00	250.00	-2.77	-6.41	-1.06	-1.58	4	90.00	250.00	-4.39	0.51	-10.38	-7.10	4
90.00	260.00	-3.43	-8.68	-2.33	-3.37	4	90.00	260.00	-3.67	0.12	-9.36	-12.43	4
90.00	270.00	-4.67	-12.77	-1.02	-5.99	4	90.00	270.00	-2.63	0.70	-14.45	-15.35	4
90.00	280.00	-3.01	-15.15	-1.04	-8.49	4	90.00	280.00	-3.72	2.57	-13.46	-22.46	4
90.00	290.00	-3.21	-12.66	0.31	-13.71	4	90.00	290.00	-3.68	3.19	-11.65	-17.12	4
90.00	300.00	-3.38	-20.44	-0.41	-24.02	4	90.00	300.00	-6.08	2.66	-6.94	-14.49	4
90.00	310.00	-1.03	-9.58	-1.88	-28.98	4	90.00	310.00	-8.04	2.76	-10.81	-9.77	4
90.00	320.00	-1.92	-5.96	-2.86	-15.42	4	90.00	320.00	-6.99	3.48	-16.68	-9.81	4
90.00	330.00	-4.65	-8.80	-4.65	-13.28	4	90.00	330.00	-9.78	3.17	-10.42	-7.65	4
90.00	340.00	-0.14	-17.53	-8.03	-12.48	4	90.00	340.00	-17.30	1.98	-8.66	-18.11	4
90.00	350.00	2.79	-27.22	-10.34	-14.32	4	90.00	350.00	-22.68	-0.12	-11.09	-10.14	4
105.00	0.00	-2.95	-12.36	-16.67	-19.26	4	105.00	0.00	-14.28	-5.11	-12.95	-11.32	4
105.00	10.00	-14.05	-10.61	-17.70	-13.79	4	105.00	10.00	-10.10	-4.58	-13.12	-8.73	4
105.00	20.00	-4.36	-9.27	-26.80	-8.62	4	105.00	20.00	-7.07	-4.34	-34.49	-12.90	4
105.00	30.00	0.39	-9.08	-12.99	-6.65	4	105.00	30.00	-5.43	-2.66	-9.43	-10.08	4
105.00	40.00	-0.21	-12.43	-10.69	-6.16	4	105.00	40.00	-5.19	-2.45	-7.53	-7.52	4
105.00	50.00	-2.97	-13.08	-21.50	-6.98	4	105.00	50.00	-2.72	-4.30	-14.33	-11.79	4
105.00	60.00	-2.03	-11.19	-7.87	-5.44	4	105.00	60.00	-3.64	-10.88	-9.18	-30.14	4
105.00	70.00	-4.31	-9.86	-4.78	-0.89	4	105.00	70.00	-4.44	-5.59	-11.20	-7.78	4
105.00	80.00	-7.4	-9.58	-2.74	0.02	4	105.00	80.00	-1.26	-2.65	-49.54	-10.60	4
105.00	90.00	-4.71	-11.19	-2.74	1.24	4	105.00	90.00	-1.74	-1.48	-21.46	-24.60	4
105.00	100.00	-5.27	-8.58	-2.63	0.47	4	105.00	100.00	-2.38	-3.74	-19.65	-18.17	4
105.00	110.00	-7.29	-10.93	-2.47	2.42	4	105.00	110.00	-4.12	-3.55	-10.75	-15.79	4
105.00	120.00	-10.38	-24.31	-1.07	0.52	4	105.00	120.00	-9.18	-3.19	-10.03	-24.78	4
105.00	130.00	-5.62	-25.14	-0.88	0.90	4	105.00	130.00	-10.77	-1.23	-5.66	-10.41	4
105.00	140.00	-2.06	-11.43	-1.90	0.68	4	105.00	140.00	-9.98	-0.61	-4.82	-9.46	4
105.00	150.00	-0.83	-11.36	-3.19	-0.18	4	105.00	150.00	-12.64	-3.60	-5.00	-7.39	4
105.00	160.00	-1.59	-16.77	-3.13	-0.59	4	105.00	160.00	-39.66	-10.80	-5.62	-6.44	4
105.00	170.00	-4.81	-7.92	-2.94	-1.92	4	105.00	170.00	-15.34	-20.03	-6.21	-5.90	4
105.00	180.00	-14.08	-3.59	-3.03	-2.90	4	105.00	180.00	-20.20	-8.96	-8.10	-6.41	4
105.00	190.00	-12.31	-2.98	-3.01	-2.26	4	105.00	190.00	-24.78	-7.06	-16.79	-4.91	4
105.00	200.00	-4.60	-5.49	-3.33	-1.76	4	105.00	200.00	-13.02	-8.70	-16.60	-3.54	4
105.00	210.00	-2.52	-7.84	-2.64	-1.57	4	105.00	210.00	-9.24	-6.64	-11.79	-3.96	4
105.00	220.00	-2.42	-5.94	-0.43	-1.47	4	105.00	220.00	-9.40	-3.51	-8.34	-4.66	4

105.00	230.00	-2.98	-5.00	0.80	-1.83	4	105.00	230.00	-12.75	-1.62	-4.37	-5.29	4
105.00	240.00	-4.82	-4.81	1.39	-1.79	4	105.00	240.00	-9.52	-0.47	-8.16	-9.34	4
105.00	250.00	-6.42	-9.24	0.05	-3.23	4	105.00	250.00	-6.73	0.27	-21.88	-10.76	4
105.00	260.00	-6.36	-31.64	-1.95	-6.23	4	105.00	260.00	-5.80	1.11	-15.10	-10.53	4
105.00	270.00	-4.66	-21.65	-2.74	-5.90	4	105.00	270.00	-5.70	2.63	-14.17	-11.64	4
105.00	280.00	-4.80	-24.47	-0.81	-4.81	4	105.00	280.00	-5.94	2.99	-11.91	-26.68	4
105.00	290.00	-5.67	-16.72	1.17	-9.43	4	105.00	290.00	-5.85	2.28	-15.61	-21.63	4
105.00	300.00	-2.88	-19.87	0.02	-18.38	4	105.00	300.00	-7.60	2.76	-14.70	-11.58	4
105.00	310.00	-3.08	-7.48	-1.79	-18.03	4	105.00	310.00	-11.21	3.71	-10.72	-17.85	4
105.00	320.00	-4.61	-7.29	-3.10	-12.40	4	105.00	320.00	-20.87	3.35	-13.51	-17.95	4
105.00	330.00	-1.29	-15.75	-3.79	-18.30	4	105.00	330.00	-25.18	0.58	-16.11	-10.30	4
105.00	340.00	1.08	-33.12	-6.86	-13.79	4	105.00	340.00	-22.18	-2.70	-20.14	-9.97	4
105.00	350.00	1.37	-33.83	-9.19	-14.94	4	105.00	350.00	-25.45	-3.83	-22.42	-10.63	4
120.00	0.00	-5.96	-14.64	-12.91	-17.27	4	120.00	0.00	-6.55	-3.57	-17.70	-7.81	4
120.00	10.00	-11.86	-13.03	-11.70	-13.00	4	120.00	10.00	-4.75	-3.20	-13.71	-7.71	4
120.00	20.00	-11.83	-12.21	-11.41	-8.22	4	120.00	20.00	-3.09	-3.98	-13.65	-5.26	4
120.00	30.00	-2.48	-8.35	-17.02	-7.83	4	120.00	30.00	-2.16	-5.45	-30.04	-3.92	4
120.00	40.00	-0.29	-5.85	-11.61	-8.76	4	120.00	40.00	-1.42	-5.53	-15.07	-3.26	4
120.00	50.00	-2.98	-4.92	-6.22	-9.08	4	120.00	50.00	-1.35	-4.62	-10.30	-5.32	4
120.00	60.00	-10.57	-5.21	-6.68	-6.89	4	120.00	60.00	-1.07	-4.10	-11.10	-15.96	4
120.00	70.00	-10.13	-4.90	-5.66	-3.76	4	120.00	70.00	-1.95	-6.22	-12.73	-16.15	4
120.00	80.00	-7.94	-6.44	-3.14	-1.87	4	120.00	80.00	-2.29	-8.97	-13.64	-12.56	4
120.00	90.00	-6.57	-8.94	-2.11	-0.41	4	120.00	90.00	-0.97	-3.89	-14.17	-18.57	4
120.00	100.00	-4.74	-6.94	-1.26	0.40	4	120.00	100.00	-1.75	-3.12	-17.13	-25.03	4
120.00	110.00	-5.28	-7.40	-2.06	-1.29	4	120.00	110.00	-2.77	-2.21	-19.23	-15.55	4
120.00	120.00	-8.31	-6.09	-3.08	-1.07	4	120.00	120.00	-5.14	-1.99	-20.02	-12.02	4
120.00	130.00	-7.01	-8.81	-2.77	-1.91	4	120.00	130.00	-5.00	-7.34	-16.22	-17.39	4
120.00	140.00	-3.19	-25.65	-4.36	-1.25	4	120.00	140.00	-7.25	-3.83	-3.39	-23.54	4
120.00	150.00	-0.94	-11.16	-5.97	-1.08	4	120.00	150.00	-15.90	-1.51	-1.51	-14.37	4
120.00	160.00	-0.62	-9.30	-5.10	-2.89	4	120.00	160.00	-10.31	-3.58	-2.06	-12.62	4
120.00	170.00	-1.39	-11.85	-4.96	-4.32	4	120.00	170.00	-6.24	-6.73	-2.46	-10.55	4
120.00	180.00	-3.32	-19.57	-5.31	-3.99	4	120.00	180.00	-5.76	-5.52	-3.38	-9.09	4
120.00	190.00	-7.58	-16.14	-5.69	-4.23	4	120.00	190.00	-7.92	-4.07	-5.34	-7.62	4
120.00	200.00	-17.88	-10.49	-6.71	-4.88	4	120.00	200.00	-18.88	-5.96	-9.45	-6.89	4
120.00	210.00	-10.48	-14.24	-7.02	-5.56	4	120.00	210.00	-14.44	-12.72	-13.39	-8.23	4
120.00	220.00	-5.49	-19.74	-6.43	-5.18	4	120.00	220.00	-9.12	-12.38	-7.30	-9.77	4
120.00	230.00	-3.57	-10.46	-3.42	-3.55	4	120.00	230.00	-9.63	-6.80	-6.39	-7.82	4
120.00	240.00	-3.44	-14.11	-0.54	-1.90	4	120.00	240.00	-10.00	-3.40	-8.89	-8.45	4
120.00	250.00	-4.00	-18.66	0.33	-2.03	4	120.00	250.00	-12.77	-0.59	-11.00	-10.99	4
120.00	260.00	-4.64	-9.72	-0.69	-2.26	4	120.00	260.00	-10.55	1.27	-8.68	-11.70	4
120.00	270.00	-4.76	-9.48	-1.77	-3.72	4	120.00	270.00	-10.77	1.89	-7.35	-15.82	4
120.00	280.00	-3.57	-9.85	-2.07	-10.02	4	120.00	280.00	-12.90	2.38	-18.28	-20.65	4
120.00	290.00	-3.85	-10.22	-0.96	-10.41	4	120.00	290.00	-9.37	2.23	-17.92	-16.92	4
120.00	300.00	-4.28	-8.22	-1.63	-6.86	4	120.00	300.00	-10.86	1.40	-13.80	-20.21	4
120.00	310.00	-5.80	-6.19	-3.72	-5.37	4	120.00	310.00	-10.56	0.94	-7.36	-24.91	4
120.00	320.00	-11.15	-7.04	-6.37	-6.70	4	120.00	320.00	-7.52	1.39	-6.58	-15.98	4
120.00	330.00	-9.88	-11.20	-6.22	-10.25	4	120.00	330.00	-8.59	0.65	-7.65	-13.39	4
120.00	340.00	-3.70	-8.60	-6.11	-18.66	4	120.00	340.00	-9.42	-0.82	-10.00	-8.36	4
120.00	350.00	-1.50	-8.52	-12.45	-17.89	4	120.00	350.00	-10.62	-1.49	-19.90	-6.27	4
135.00	0.00	-17.57	-6.68	-4.03	-14.47	4	135.00	0.00	-5.34	-2.34	-10.28	-8.42	4
135.00	10.00	-10.46	-11.25	-5.18	-13.80	4	135.00	10.00	-2.88	-2.77	-11.46	-7.05	4
135.00	20.00	-6.17	-13.24	-8.85	-10.91	4	135.00	20.00	-3.06	-4.64	-10.78	-7.67	4
135.00	30.00	-4.77	-5.06	-24.77	-8.77	4	135.00	30.00	-5.25	-7.02	-9.99	-10.18	4
135.00	40.00	-8.06	-3.66	-10.70	-9.26	4	135.00	40.00	-7.75	-7.55	-12.69	-11.83	4
135.00	50.00	-16.10	-5.46	-7.50	-8.34	4	135.00	50.00	-6.50	-5.96	-16.21	-14.81	4
135.00	60.00	-12.69	-6.28	-7.68	-7.26	4	135.00	60.00	-3.13	-6.46	-19.47	-13.81	4

135.00	70.00	-7.38	-6.15	-5.86	-5.80	4	135.00	70.00	-3.57	-10.62	-17.79	-16.23	4
135.00	80.00	-5.60	-8.01	-4.03	-5.50	4	135.00	80.00	-4.95	-24.24	-10.36	-11.14	4
135.00	90.00	-5.58	-4.66	-2.12	-4.65	4	135.00	90.00	-2.99	-9.35	-11.73	-15.55	4
135.00	100.00	-4.43	-1.95	-1.85	-6.27	4	135.00	100.00	-2.54	-5.52	-16.71	-19.80	4
135.00	110.00	-6.01	-3.32	-2.57	-6.68	4	135.00	110.00	-6.12	-3.42	-10.90	-8.68	4
135.00	120.00	-6.80	-8.80	-4.66	-3.79	4	135.00	120.00	-12.49	-4.32	-9.78	-5.54	4
135.00	130.00	-4.75	-11.83	-6.07	-3.58	4	135.00	130.00	-17.86	-6.06	-9.74	-9.30	4
135.00	140.00	-2.08	-10.02	-5.88	-4.24	4	135.00	140.00	-26.16	-6.38	-8.29	-10.61	4
135.00	150.00	-0.17	-16.74	-5.90	-3.80	4	135.00	150.00	-14.10	-9.11	-6.24	-6.09	4
135.00	160.00	0.00	-14.84	-6.31	-3.35	4	135.00	160.00	-8.56	-7.71	-5.03	-4.39	4
135.00	170.00	-1.40	-9.86	-7.59	-3.52	4	135.00	170.00	-5.69	-5.25	-5.39	-4.17	4
135.00	180.00	-4.21	-9.56	-10.11	-3.63	4	135.00	180.00	-5.41	-4.09	-7.02	-4.57	4
135.00	190.00	-8.78	-10.03	-12.60	-3.45	4	135.00	190.00	-7.74	-4.41	-10.59	-5.18	4
135.00	200.00	-14.76	-8.75	-13.37	-2.94	4	135.00	200.00	-14.95	-5.18	-16.23	-5.93	4
135.00	210.00	-8.54	-6.43	-11.63	-2.48	4	135.00	210.00	-16.84	-6.97	-9.56	-7.21	4
135.00	220.00	-5.95	-3.98	-8.89	-2.17	4	135.00	220.00	-8.35	-8.13	-6.33	-8.16	4
135.00	230.00	-7.12	-3.53	-4.03	-2.18	4	135.00	230.00	-7.38	-6.35	-6.60	-7.35	4
135.00	240.00	-11.03	-3.79	-1.04	-2.19	4	135.00	240.00	-12.65	-3.46	-9.85	-5.52	4
135.00	250.00	-16.26	-4.76	-1.25	-1.32	4	135.00	250.00	-16.43	-0.74	-15.32	-4.71	4
135.00	260.00	-15.69	-7.32	-3.21	-1.72	4	135.00	260.00	-16.39	-0.56	-12.13	-7.49	4
135.00	270.00	-11.67	-12.26	-4.48	-4.59	4	135.00	270.00	-11.41	-3.15	-9.76	-17.76	4
135.00	280.00	-10.75	-12.06	-5.20	-6.11	4	135.00	280.00	-9.33	-1.34	-10.53	-27.34	4
135.00	290.00	-8.88	-8.38	-4.40	-5.89	4	135.00	290.00	-14.37	0.96	-13.41	-19.95	4
135.00	300.00	-8.00	-7.06	-5.03	-4.29	4	135.00	300.00	-13.07	1.24	-13.06	-12.96	4
135.00	310.00	-9.30	-7.46	-8.55	-3.88	4	135.00	310.00	-8.41	-0.49	-5.27	-14.64	4
135.00	320.00	-11.16	-7.71	-8.10	-6.10	4	135.00	320.00	-8.82	-1.79	-6.15	-14.53	4
135.00	330.00	-11.86	-8.53	-8.39	-13.06	4	135.00	330.00	-17.06	-1.26	-10.28	-11.29	4
135.00	340.00	-9.66	-12.03	-8.53	-16.27	4	135.00	340.00	-21.94	-2.22	-12.75	-10.33	4
135.00	350.00	-9.90	-15.98	-8.17	-14.90	4	135.00	350.00	-14.71	-3.36	-13.59	-10.20	4
150.00	0.00	-10.35	-12.18	-17.69	-12.84	4	150.00	0.00	-5.99	-4.91	-11.19	-6.96	4
150.00	10.00	-11.62	-15.59	-19.66	-12.33	4	150.00	10.00	-4.45	-5.93	-10.37	-6.30	4
150.00	20.00	-19.96	-15.60	-18.86	-12.25	4	150.00	20.00	-2.27	-8.33	-9.01	-5.30	4
150.00	30.00	-11.27	-9.86	-19.72	-13.12	4	150.00	30.00	-0.75	-10.50	-7.72	-5.47	4
150.00	40.00	-5.18	-7.83	-16.58	-16.62	4	150.00	40.00	-1.12	-11.04	-7.60	-7.47	4
150.00	50.00	-3.28	-6.73	-13.25	-22.91	4	150.00	50.00	-3.99	-9.89	-6.95	-11.35	4
150.00	60.00	-4.02	-6.46	-10.00	-24.30	4	150.00	60.00	-7.55	-10.61	-6.03	-14.82	4
150.00	70.00	-5.98	-8.49	-8.03	-18.21	4	150.00	70.00	-4.78	-9.17	-6.20	-15.84	4
150.00	80.00	-5.66	-13.02	-5.33	-12.64	4	150.00	80.00	-1.99	-5.82	-7.16	-17.63	4
150.00	90.00	-4.31	-9.75	-2.73	-10.26	4	150.00	90.00	-1.96	-5.17	-9.01	-18.42	4
150.00	100.00	-4.48	-6.49	-1.92	-9.65	4	150.00	100.00	-3.63	-6.89	-13.04	-18.59	4
150.00	110.00	-5.83	-7.65	-2.74	-10.34	4	150.00	110.00	-4.86	-8.56	-17.24	-21.62	4
150.00	120.00	-6.30	-11.14	-3.43	-8.41	4	150.00	120.00	-5.46	-5.53	-16.25	-17.79	4
150.00	130.00	-5.49	-8.36	-3.76	-7.52	4	150.00	130.00	-5.57	-3.21	-14.98	-11.82	4
150.00	140.00	-3.70	-6.16	-5.14	-10.01	4	150.00	140.00	-5.39	-2.38	-14.58	-8.62	4
150.00	150.00	-2.67	-6.19	-13.92	-11.77	4	150.00	150.00	-5.61	-1.83	-12.09	-6.54	4
150.00	160.00	-2.06	-7.30	-13.48	-10.11	4	150.00	160.00	-5.76	-2.45	-13.73	-5.50	4
150.00	170.00	-2.46	-7.16	-11.70	-7.90	4	150.00	170.00	-5.07	-4.87	-15.05	-5.50	4
150.00	180.00	-3.46	-5.64	-11.24	-5.84	4	150.00	180.00	-3.98	-8.79	-16.66	-7.00	4
150.00	190.00	-6.45	-4.16	-11.12	-5.04	4	150.00	190.00	-3.61	-10.03	-15.38	-9.87	4
150.00	200.00	-11.26	-3.86	-11.14	-4.79	4	150.00	200.00	-4.75	-10.22	-12.68	-14.14	4
150.00	210.00	-11.82	-4.71	-10.35	-4.58	4	150.00	210.00	-6.88	-12.46	-10.40	-14.36	4
150.00	220.00	-5.83	-6.16	-8.56	-4.68	4	150.00	220.00	-6.95	-14.08	-8.48	-9.48	4
150.00	230.00	-3.49	-7.79	-6.45	-3.98	4	150.00	230.00	-4.55	-12.07	-8.66	-6.71	4
150.00	240.00	-3.69	-8.52	-5.11	-3.46	4	150.00	240.00	-3.46	-9.10	-10.24	-5.22	4
150.00	250.00	-6.50	-8.84	-4.56	-3.26	4	150.00	250.00	-3.74	-6.24	-11.84	-5.58	4
150.00	260.00	-11.47	-10.24	-4.11	-3.63	4	150.00	260.00	-5.14	-4.25	-16.44	-8.69	4

150.00	270.00	-20.01	-12.79	-3.77	-3.45	4	150.00	270.00	-8.64	-3.73	-14.15	-16.26	4
150.00	280.00	-20.49	-18.87	-4.22	-2.87	4	150.00	280.00	-12.77	-4.00	-12.31	-18.78	4
150.00	290.00	-13.05	-18.55	-6.15	-2.61	4	150.00	290.00	-12.60	-2.20	-8.37	-15.50	4
150.00	300.00	-10.10	-11.25	-8.37	-3.19	4	150.00	300.00	-10.67	1.21	-6.77	-17.03	4
150.00	310.00	-12.42	-6.81	-9.54	-4.61	4	150.00	310.00	-6.20	3.14	-9.18	-14.88	4
150.00	320.00	-27.74	-4.46	-9.37	-5.66	4	150.00	320.00	-4.16	3.49	-16.52	-9.57	4
150.00	330.00	-15.04	-3.92	-9.00	-6.20	4	150.00	330.00	-5.51	2.30	-15.29	-7.00	4
150.00	340.00	-11.55	-4.62	-9.01	-7.76	4	150.00	340.00	-10.80	-0.58	-11.30	-6.58	4
150.00	350.00	-9.97	-5.79	-10.20	-9.97	4	150.00	350.00	-12.86	-3.51	-11.48	-6.66	4
165.00	0.00	-4.46	-0.89	-15.90	-16.40	4	165.00	0.00	-5.81	-3.68	-11.97	-7.54	4
165.00	10.00	-5.30	-1.71	-14.91	-26.48	4	165.00	10.00	-3.56	-6.43	-11.79	-8.16	4
165.00	20.00	-8.03	-2.63	-13.44	-26.58	4	165.00	20.00	-2.07	-7.55	-12.09	-10.22	4
165.00	30.00	-13.63	-3.13	-10.78	-19.37	4	165.00	30.00	-1.56	-8.26	-10.90	-12.40	4
165.00	40.00	-18.57	-3.51	-9.21	-17.63	4	165.00	40.00	-1.23	-9.21	-10.94	-14.28	4
165.00	50.00	-10.74	-3.77	-7.95	-17.58	4	165.00	50.00	-1.31	-9.93	-12.52	-14.65	4
165.00	60.00	-7.63	-4.12	-6.95	-19.14	4	165.00	60.00	-1.93	-10.41	-12.96	-14.24	4
165.00	70.00	-6.79	-3.67	-6.16	-22.84	4	165.00	70.00	-2.34	-11.05	-13.33	-14.14	4
165.00	80.00	-6.19	-3.07	-5.92	-24.24	4	165.00	80.00	-2.43	-12.91	-14.29	-18.78	4
165.00	90.00	-5.49	-2.76	-2.55	-17.50	4	165.00	90.00	-2.15	-15.00	-13.49	-19.21	4
165.00	100.00	-4.38	-2.92	-4.34	-13.07	4	165.00	100.00	-2.26	-16.77	-26.25	-16.81	4
165.00	110.00	-3.19	-4.08	-6.32	-12.72	4	165.00	110.00	-3.02	-11.24	-28.36	-16.77	4
165.00	120.00	-2.30	-6.28	-8.56	-13.97	4	165.00	120.00	-4.47	-7.87	-20.73	-18.11	4
165.00	130.00	-1.86	-8.81	-10.88	-14.19	4	165.00	130.00	-5.78	-6.54	-20.20	-19.85	4
165.00	140.00	-1.77	-12.89	-11.95	-12.69	4	165.00	140.00	-5.87	-6.32	-19.80	-16.53	4
165.00	150.00	-2.34	-18.88	-12.15	-10.95	4	165.00	150.00	-4.94	-7.19	-18.72	-13.80	4
165.00	160.00	-4.03	-26.90	-10.98	-9.94	4	165.00	160.00	-3.32	-8.32	-17.53	-11.90	4
165.00	170.00	-7.50	-15.26	-10.17	-8.74	4	165.00	170.00	-2.58	-10.30	-15.83	-11.45	4
165.00	180.00	-15.76	-11.47	-9.16	-7.19	4	165.00	180.00	-2.58	-12.88	-12.05	-11.95	4
165.00	190.00	-13.93	-10.19	-8.72	-6.54	4	165.00	190.00	-3.48	-15.05	-8.77	-15.67	4
165.00	200.00	-6.51	-10.05	-9.03	-6.15	4	165.00	200.00	-4.82	-18.96	-7.01	-22.86	4
165.00	210.00	-3.25	-9.31	-10.28	-6.45	4	165.00	210.00	-6.23	-24.56	-7.00	-24.79	4
165.00	220.00	-1.75	-8.85	-11.18	-7.03	4	165.00	220.00	-6.05	-26.17	-7.93	-22.37	4
165.00	230.00	-1.66	-9.21	-10.97	-7.93	4	165.00	230.00	-5.10	-14.31	-9.39	-19.49	4
165.00	240.00	-2.48	-9.87	-10.90	-8.47	4	165.00	240.00	-4.79	-9.30	-10.94	-15.06	4
165.00	250.00	-3.99	-10.30	-10.37	-9.01	4	165.00	250.00	-4.88	-6.53	-11.93	-13.43	4
165.00	260.00	-6.60	-10.79	-10.00	-9.56	4	165.00	260.00	-5.16	-4.65	-10.78	-13.89	4
165.00	270.00	-9.40	-12.14	-9.67	-9.19	4	165.00	270.00	-6.03	-2.75	-8.87	-14.65	4
165.00	280.00	-12.35	-13.76	-11.74	-8.24	4	165.00	280.00	-7.08	-1.23	-9.75	-16.20	4
165.00	290.00	-13.49	-17.20	-13.73	-8.56	4	165.00	290.00	-8.57	0.21	-12.18	-19.37	4
165.00	300.00	-13.99	-28.65	-15.74	-9.86	4	165.00	300.00	-9.97	1.66	-12.51	-20.27	4
165.00	310.00	-13.51	-15.30	-19.44	-10.77	4	165.00	310.00	-10.46	2.74	-10.39	-18.13	4
165.00	320.00	-11.11	-7.79	-24.32	-10.48	4	165.00	320.00	-10.28	3.11	-9.23	-14.89	4
165.00	330.00	-8.65	-3.84	-20.42	-10.81	4	165.00	330.00	-10.66	2.73	-10.72	-12.15	4
165.00	340.00	-6.90	-1.91	-18.42	-11.29	4	165.00	340.00	-11.30	1.80	-13.76	-10.50	4
165.00	350.00	-6.42	-1.60	-18.14	-12.38	4	165.00	350.00	-11.26	0.88	-16.00	-9.73	4
180.00	0.00	-12.54	-3.91	-11.11	-17.94	4	180.00	0.00	-5.30	-6.28	-20.02	-14.96	4
180.00	10.00	-12.20	-3.56	-11.02	-17.62	4	180.00	10.00	-5.27	-6.80	-20.00	-14.78	4
180.00	20.00	-12.45	-2.89	-10.87	-18.02	4	180.00	20.00	-5.29	-8.50	-15.94	-15.55	4
180.00	30.00	-12.46	-2.62	-11.20	-16.40	4	180.00	30.00	-5.38	-11.10	-13.31	-16.08	4
180.00	40.00	-12.03	-2.74	-12.03	-14.92	4	180.00	40.00	-5.62	-13.17	-12.31	-16.64	4
180.00	50.00	-10.97	-2.95	-13.39	-14.32	4	180.00	50.00	-6.06	-12.46	-11.81	-18.42	4
180.00	60.00	-9.88	-3.31	-16.40	-14.34	4	180.00	60.00	-6.89	-10.49	-11.30	-22.07	4
180.00	70.00	-8.82	-4.17	-18.64	-14.33	4	180.00	70.00	-8.18	-8.75	-10.35	-25.69	4
180.00	80.00	-7.84	-5.07	-22.52	-14.28	4	180.00	80.00	-9.52	-6.97	-9.47	-24.31	4
180.00	90.00	-7.30	-6.45	-22.71	-15.65	4	180.00	90.00	-10.90	-5.37	-9.22	-20.42	4
180.00	100.00	-6.57	-8.48	-21.16	-17.66	4	180.00	100.00	-12.83	-4.53	-9.57	-17.96	4

180.00	110.00	-6.40	-11.03	-17.74	-21.81	4	180.00	110.00	-14.16	-4.11	-10.38	-17.42	4
180.00	120.00	-6.26	-13.74	-15.75	-19.44	4	180.00	120.00	-14.35	-3.77	-11.87	-18.18	4
180.00	130.00	-6.47	-14.64	-13.99	-14.51	4	180.00	130.00	-12.47	-3.66	-13.70	-20.73	4
180.00	140.00	-7.49	-12.73	-13.91	-12.47	4	180.00	140.00	-10.40	-4.16	-15.94	-23.73	4
180.00	150.00	-8.41	-10.24	-11.74	-12.01	4	180.00	150.00	-8.58	-5.61	-12.24	-27.20	4
180.00	160.00	-10.32	-8.84	-13.18	-12.18	4	180.00	160.00	-7.33	-7.59	-11.51	-26.49	4
180.00	170.00	-14.07	-7.38	-15.09	-13.31	4	180.00	170.00	-6.54	-8.85	-10.60	-25.07	4
180.00	180.00	-20.51	-6.37	-18.58	-14.14	4	180.00	180.00	-5.97	-10.08	-9.62	-24.10	4
180.00	190.00	-26.03	-5.79	-22.35	-14.93	4	180.00	190.00	-6.04	-11.67	-9.51	-21.97	4
180.00	200.00	-14.85	-5.40	-27.86	-16.39	4	180.00	200.00	-6.11	-12.28	-9.26	-19.42	4
180.00	210.00	-11.55	-4.74	-21.59	-16.29	4	180.00	210.00	-6.72	-13.76	-9.99	-18.12	4
180.00	220.00	-9.47	-4.13	-15.89	-16.33	4	180.00	220.00	-7.84	-14.40	-10.44	-17.21	4
180.00	230.00	-7.83	-3.80	-11.79	-15.89	4	180.00	230.00	-9.30	-14.00	-10.03	-16.39	4
180.00	240.00	-6.81	-3.87	-9.41	-14.89	4	180.00	240.00	-11.64	-12.58	-9.90	-15.88	4
180.00	250.00	-6.00	-3.91	-7.93	-14.37	4	180.00	250.00	-14.37	-10.59	-11.01	-15.33	4
180.00	260.00	-5.56	-4.29	-7.52	-13.65	4	180.00	260.00	-17.17	-8.54	-14.56	-15.17	4
180.00	270.00	-5.01	-4.80	-7.83	-13.05	4	180.00	270.00	-17.30	-6.99	-19.42	-15.76	4
180.00	280.00	-4.99	-5.61	-9.61	-13.26	4	180.00	280.00	-14.73	-5.72	-19.29	-16.46	4
180.00	290.00	-5.36	-6.83	-11.90	-14.59	4	180.00	290.00	-11.80	-4.51	-16.39	-17.49	4
180.00	300.00	-5.99	-8.33	-14.19	-16.22	4	180.00	300.00	-9.96	-3.81	-16.90	-16.65	4
180.00	310.00	-7.39	-10.99	-13.05	-18.57	4	180.00	310.00	-8.14	-3.16	-20.42	-15.50	4
180.00	320.00	-8.85	-12.72	-10.73	-21.66	4	180.00	320.00	-7.23	-2.85	-26.46	-15.05	4
180.00	330.00	-9.50	-11.68	-10.87	-28.22	4	180.00	330.00	-6.44	-2.74	-35.31	-14.94	4
180.00	340.00	-10.26	-9.17	-11.24	-25.94	4	180.00	340.00	-6.00	-2.88	-24.89	-14.14	4
180.00	350.00	-10.35	-6.82	-11.10	-19.99	4	180.00	350.00	-5.78	-3.58	-23.74	-13.31	4

5320MHz

Theta Plorization							Phi Plorization						
Angle (θ)	Angle (ψ)	Max Gain(dBi)				N_{ANT}	Angle (θ)	Angle (ψ)	Max Gain(dBi)				N_{ANT}
		Ant 1(G1)	Ant 2(G2)	Ant 3(G3)	Ant 4(G4)				Ant 1(G1)	Ant 2(G2)	Ant 3(G3)	Ant 4(G4)	
0.00	0.00	0.11	-0.72	-15.94	-4.72	4	0.00	0.00	-7.87	-0.78	1.49	3.07	4
0.00	10.00	0.04	-0.07	-21.86	-6.76	4	0.00	10.00	-7.40	-1.66	1.65	3.43	4
0.00	20.00	-0.45	0.77	-17.11	-11.89	4	0.00	20.00	-5.56	-3.53	1.63	3.87	4
0.00	30.00	-1.13	1.59	-9.90	-16.10	4	0.00	30.00	-3.70	-6.22	1.11	4.13	4
0.00	40.00	-2.12	1.79	-6.54	-9.23	4	0.00	40.00	-2.27	-9.12	0.49	3.82	4
0.00	50.00	-3.66	1.86	-3.63	-4.79	4	0.00	50.00	-1.17	-9.77	-0.13	3.14	4
0.00	60.00	-5.65	1.84	-1.44	-2.07	4	0.00	60.00	-0.48	-8.55	-1.43	2.20	4
0.00	70.00	-7.93	1.75	-0.10	-0.15	4	0.00	70.00	0.00	-5.99	-3.73	0.88	4
0.00	80.00	-9.33	1.30	0.50	1.05	4	0.00	80.00	0.23	-3.30	-6.57	-0.77	4
0.00	90.00	-8.87	0.52	1.05	2.09	4	0.00	90.00	0.23	-1.58	-11.55	-3.02	4
0.00	100.00	-6.74	-0.84	1.41	2.74	4	0.00	100.00	-0.01	-0.59	-21.46	-6.57	4
0.00	110.00	-4.59	-2.49	1.56	3.06	4	0.00	110.00	-0.51	0.18	-13.86	-11.29	4
0.00	120.00	-3.28	-4.72	1.28	3.07	4	0.00	120.00	-1.40	0.98	-7.79	-14.90	4
0.00	130.00	-1.93	-6.99	0.49	2.98	4	0.00	130.00	-2.75	1.48	-4.49	-10.26	4
0.00	140.00	-1.18	-9.11	-0.65	2.58	4	0.00	140.00	-4.11	1.72	-2.07	-5.69	4
0.00	150.00	-0.67	-9.33	-2.03	1.99	4	0.00	150.00	-5.50	1.64	-0.46	-2.87	4
0.00	160.00	-0.51	-7.29	-3.74	1.09	4	0.00	160.00	-6.40	1.42	0.78	-1.47	4
0.00	170.00	-0.69	-4.94	-6.55	-0.22	4	0.00	170.00	-6.93	0.98	1.47	-0.41	4
0.00	180.00	-1.15	-2.81	-10.63	-2.23	4	0.00	180.00	-6.65	0.27	1.40	1.05	4
0.00	190.00	-1.55	-1.40	-18.37	-4.47	4	0.00	190.00	-5.51	-0.70	1.23	2.01	4
0.00	200.00	-2.27	-0.17	-21.18	-8.50	4	0.00	200.00	-4.49	-2.00	1.76	2.13	4
0.00	210.00	-3.10	0.65	-10.40	-14.96	4	0.00	210.00	-3.48	-4.38	1.79	1.99	4
0.00	220.00	-3.78	1.24	-6.24	-10.67	4	0.00	220.00	-2.80	-7.39	0.97	2.29	4
0.00	230.00	-4.56	1.48	-3.39	-5.52	4	0.00	230.00	-2.11	-9.67	-0.47	2.66	4
0.00	240.00	-5.66	1.54	-1.58	-2.53	4	0.00	240.00	-1.53	-9.38	-1.88	2.20	4
0.00	250.00	-6.66	1.43	-0.44	-0.39	4	0.00	250.00	-1.11	-6.97	-3.68	0.97	4
0.00	260.00	-7.63	1.03	0.56	1.23	4	0.00	260.00	-0.81	-4.33	-6.11	-0.82	4
0.00	270.00	-8.47	-0.01	1.14	2.36	4	0.00	270.00	-0.68	-2.29	-10.51	-3.42	4
0.00	280.00	-8.24	-1.27	1.49	3.24	4	0.00	280.00	-0.64	-0.49	-22.04	-7.33	4
0.00	290.00	-7.27	-2.85	1.36	3.60	4	0.00	290.00	-0.87	0.65	-18.92	-14.00	4
0.00	300.00	-5.85	-4.77	0.93	3.62	4	0.00	300.00	-1.15	1.34	-7.70	-17.83	4
0.00	310.00	-4.45	-7.30	0.20	3.29	4	0.00	310.00	-1.68	1.62	-4.33	-9.45	4
0.00	320.00	-3.18	-8.68	-0.79	2.72	4	0.00	320.00	-2.68	1.66	-2.11	-3.96	4
0.00	330.00	-2.03	-8.32	-2.28	2.07	4	0.00	330.00	-3.96	1.61	-1.15	-0.54	4
0.00	340.00	-1.24	-6.19	-4.17	0.97	4	0.00	340.00	-5.76	1.49	-0.64	1.47	4
0.00	350.00	-0.55	-3.87	-6.62	-0.79	4	0.00	350.00	-7.64	1.06	-0.08	2.42	4
15.00	0.00	1.07	-4.72	-13.21	-5.61	4	15.00	0.00	-4.78	-2.31	-0.02	3.52	4
15.00	10.00	0.99	-2.60	-16.12	-10.84	4	15.00	10.00	-3.41	-3.84	-0.75	3.57	4
15.00	20.00	0.44	-1.28	-12.83	-15.18	4	15.00	20.00	-2.43	-5.94	-1.02	3.12	4
15.00	30.00	-0.09	0.00	-8.48	-10.71	4	15.00	30.00	-1.70	-9.78	-2.49	2.43	4
15.00	40.00	-1.02	1.03	-5.97	-6.37	4	15.00	40.00	-0.96	-14.22	-4.62	1.84	4
15.00	50.00	-2.02	1.49	-4.28	-2.99	4	15.00	50.00	-0.32	-9.62	-6.05	1.23	4
15.00	60.00	-3.94	1.25	-2.91	-0.85	4	15.00	60.00	0.23	-5.86	-6.50	0.46	4
15.00	70.00	-7.08	0.34	-1.92	0.79	4	15.00	70.00	0.87	-2.94	-7.59	-0.76	4
15.00	80.00	-13.96	-0.84	-0.94	1.94	4	15.00	80.00	1.40	-1.05	-11.31	-2.47	4
15.00	90.00	-15.00	-2.33	-0.60	2.06	4	15.00	90.00	1.42	-0.03	-17.56	-4.77	4
15.00	100.00	-7.10	-3.95	-1.06	1.90	4	15.00	100.00	0.86	0.04	-19.30	-7.52	4
15.00	110.00	-3.55	-5.22	-1.07	1.49	4	15.00	110.00	-0.31	-0.23	-12.73	-10.19	4
15.00	120.00	-1.54	-6.59	-1.06	1.04	4	15.00	120.00	-2.17	-0.49	-7.63	-11.27	4
15.00	130.00	-0.72	-8.71	-1.45	0.46	4	15.00	130.00	-4.48	-0.68	-4.66	-8.18	4
15.00	140.00	-0.55	-11.88	-2.45	-0.24	4	15.00	140.00	-6.73	-0.82	-2.47	-4.96	4

15.00	150.00	-1.08	-15.43	-4.16	-1.23	4	15.00	150.00	-7.79	-1.04	-0.95	-2.51	4
15.00	160.00	-2.03	-12.67	-6.31	-2.71	4	15.00	160.00	-7.03	-1.44	0.23	-0.96	4
15.00	170.00	-3.31	-8.36	-9.02	-4.53	4	15.00	170.00	-5.66	-2.29	0.84	-0.04	4
15.00	180.00	-4.84	-5.19	-10.43	-7.16	4	15.00	180.00	-4.18	-3.75	0.86	0.46	4
15.00	190.00	-6.69	-3.06	-8.65	-11.59	4	15.00	190.00	-3.02	-5.69	0.79	0.60	4
15.00	200.00	-8.85	-1.73	-6.47	-19.66	4	15.00	200.00	-2.65	-7.95	0.99	-0.20	4
15.00	210.00	-13.42	-0.91	-4.47	-15.22	4	15.00	210.00	-2.26	-11.68	0.86	-1.23	4
15.00	220.00	-23.53	-0.34	-2.90	-11.88	4	15.00	220.00	-1.63	-18.95	-0.22	-1.89	4
15.00	230.00	-17.03	-0.21	-1.33	-10.34	4	15.00	230.00	-1.46	-14.60	-2.17	-2.21	4
15.00	240.00	-10.15	-0.09	0.27	-8.30	4	15.00	240.00	-2.00	-8.26	-4.00	-2.82	4
15.00	250.00	-6.41	-0.17	1.40	-5.92	4	15.00	250.00	-3.52	-4.83	-5.99	-4.02	4
15.00	260.00	-4.77	-0.36	1.98	-3.45	4	15.00	260.00	-5.59	-2.17	-9.02	-6.73	4
15.00	270.00	-3.92	-1.05	2.08	-1.95	4	15.00	270.00	-8.10	-0.19	-14.76	-10.18	4
15.00	280.00	-3.71	-2.26	1.96	-1.12	4	15.00	280.00	-8.77	1.06	-15.34	-15.97	4
15.00	290.00	-3.77	-3.80	1.59	-0.45	4	15.00	290.00	-7.13	1.80	-9.00	-22.77	4
15.00	300.00	-3.74	-6.36	0.76	0.24	4	15.00	300.00	-5.11	1.88	-6.02	-12.08	4
15.00	310.00	-3.06	-9.18	0.13	0.83	4	15.00	310.00	-3.99	1.53	-3.79	-6.69	4
15.00	320.00	-2.11	-11.59	-1.07	0.88	4	15.00	320.00	-3.65	0.95	-2.14	-3.63	4
15.00	330.00	-0.94	-12.12	-2.82	0.55	4	15.00	330.00	-3.95	0.18	-0.82	-0.97	4
15.00	340.00	-0.12	-10.79	-5.32	-0.20	4	15.00	340.00	-4.87	-0.46	-0.03	0.74	4
15.00	350.00	0.23	-9.64	-7.02	-0.92	4	15.00	350.00	-5.17	-0.69	0.21	1.68	4
30.00	0.00	1.57	-6.47	-14.15	-12.49	4	30.00	0.00	-4.01	-3.55	0.54	-3.04	4
30.00	10.00	1.67	-5.78	-25.79	-14.70	4	30.00	10.00	-3.84	-3.88	0.35	-3.05	4
30.00	20.00	1.64	-5.29	-13.36	-11.65	4	30.00	20.00	-3.44	-4.79	-0.16	-3.27	4
30.00	30.00	1.18	-4.91	-7.39	-6.83	4	30.00	30.00	-2.98	-6.12	-1.71	-3.76	4
30.00	40.00	0.27	-4.26	-5.18	-4.85	4	30.00	40.00	-1.78	-7.68	-4.40	-5.24	4
30.00	50.00	-1.17	-3.18	-4.21	-3.34	4	30.00	50.00	-0.64	-10.09	-7.05	-4.93	4
30.00	60.00	-3.80	-2.66	-4.78	-1.55	4	30.00	60.00	0.10	-9.92	-9.40	-3.09	4
30.00	70.00	-9.26	-3.26	-5.06	0.00	4	30.00	70.00	0.31	-7.94	-12.38	-2.98	4
30.00	80.00	-19.78	-4.22	-3.68	1.03	4	30.00	80.00	-0.57	-4.09	-13.57	-4.38	4
30.00	90.00	-30.14	-4.98	-1.92	1.58	4	30.00	90.00	-1.82	-1.75	-14.71	-5.65	4
30.00	100.00	-19.02	-6.04	-1.49	1.74	4	30.00	100.00	-2.05	-1.09	-21.69	-6.45	4
30.00	110.00	-11.22	-6.96	-2.66	0.86	4	30.00	110.00	-2.12	-0.98	-14.77	-7.60	4
30.00	120.00	-6.78	-7.14	-3.34	0.77	4	30.00	120.00	-2.49	-1.74	-9.35	-9.89	4
30.00	130.00	-4.38	-7.22	-3.54	1.36	4	30.00	130.00	-4.12	-3.98	-6.36	-6.79	4
30.00	140.00	-3.70	-7.90	-5.78	0.91	4	30.00	140.00	-6.82	-5.51	-5.50	-3.74	4
30.00	150.00	-3.94	-8.98	-8.64	-0.88	4	30.00	150.00	-10.47	-5.44	-3.86	-2.39	4
30.00	160.00	-4.78	-10.01	-12.33	-3.25	4	30.00	160.00	-14.47	-4.91	-2.81	-1.61	4
30.00	170.00	-6.03	-9.88	-13.48	-5.34	4	30.00	170.00	-15.17	-4.33	-2.01	-1.37	4
30.00	180.00	-6.69	-7.09	-11.49	-7.52	4	30.00	180.00	-12.86	-4.39	-1.39	-1.68	4
30.00	190.00	-6.16	-5.08	-9.25	-11.36	4	30.00	190.00	-9.76	-6.42	-1.19	-2.36	4
30.00	200.00	-5.85	-3.56	-6.98	-17.83	4	30.00	200.00	-6.20	-10.40	-1.20	-2.51	4
30.00	210.00	-6.21	-3.04	-5.14	-17.75	4	30.00	210.00	-3.25	-12.36	-1.29	-3.00	4
30.00	220.00	-7.32	-3.10	-3.63	-15.58	4	30.00	220.00	-0.66	-10.26	-1.69	-3.95	4
30.00	230.00	-10.46	-3.13	-2.71	-12.83	4	30.00	230.00	0.63	-6.83	-1.96	-5.86	4
30.00	240.00	-15.03	-3.71	-1.45	-9.70	4	30.00	240.00	0.57	-4.66	-2.86	-8.27	4
30.00	250.00	-17.70	-4.63	-0.48	-8.77	4	30.00	250.00	-0.43	-4.39	-5.11	-8.37	4
30.00	260.00	-11.66	-4.70	0.74	-8.85	4	30.00	260.00	-1.30	-4.01	-7.81	-6.82	4
30.00	270.00	-6.31	-4.28	1.84	-9.16	4	30.00	270.00	-1.95	-2.33	-11.03	-8.14	4
30.00	280.00	-3.45	-4.14	2.69	-9.20	4	30.00	280.00	-4.04	-0.04	-24.79	-16.63	4
30.00	290.00	-2.37	-6.03	2.98	-9.79	4	30.00	290.00	-8.92	1.70	-12.77	-15.71	4
30.00	300.00	-1.85	-8.66	2.43	-13.11	4	30.00	300.00	-15.35	1.96	-7.41	-13.94	4
30.00	310.00	-1.46	-11.55	1.44	-17.08	4	30.00	310.00	-11.89	1.30	-4.97	-15.62	4
30.00	320.00	-1.24	-12.14	0.39	-8.26	4	30.00	320.00	-7.98	0.31	-3.64	-13.96	4
30.00	330.00	-0.96	-10.17	-0.82	-5.26	4	30.00	330.00	-5.73	-0.83	-2.64	-8.15	4
30.00	340.00	-0.12	-8.68	-2.33	-5.55	4	30.00	340.00	-4.92	-1.85	-1.63	-3.85	4

30.00	350.00	0.87	-8.54	-4.44	-8.77	4	30.00	350.00	-4.92	-2.61	-0.54	-2.30	4
45.00	0.00	1.49	-9.88	-12.25	-8.67	4	45.00	0.00	-11.81	-1.32	-1.11	-12.99	4
45.00	10.00	2.31	-9.83	-25.53	-6.93	4	45.00	10.00	-7.44	-1.97	-1.92	-9.41	4
45.00	20.00	2.61	-11.28	-14.11	-6.55	4	45.00	20.00	-3.43	-2.87	-3.77	-3.18	4
45.00	30.00	1.84	-10.94	-8.98	-5.13	4	45.00	30.00	-0.81	-4.81	-6.94	-0.98	4
45.00	40.00	-0.35	-10.20	-6.34	-3.09	4	45.00	40.00	0.20	-6.71	-14.26	-1.25	4
45.00	50.00	-4.63	-10.04	-5.68	-1.51	4	45.00	50.00	0.17	-8.29	-14.37	-1.14	4
45.00	60.00	-10.39	-9.38	-6.10	0.74	4	45.00	60.00	-0.39	-6.89	-9.73	-0.47	4
45.00	70.00	-14.11	-9.12	-5.74	1.95	4	45.00	70.00	-0.68	-7.53	-10.97	-2.74	4
45.00	80.00	-23.01	-10.27	-3.97	1.34	4	45.00	80.00	-1.33	-6.00	-16.91	-6.23	4
45.00	90.00	-22.82	-9.13	-4.64	2.30	4	45.00	90.00	-3.46	-5.01	-18.71	-9.66	4
45.00	100.00	-14.35	-9.11	-5.73	1.84	4	45.00	100.00	-4.48	-3.01	-18.11	-14.65	4
45.00	110.00	-10.10	-8.87	-5.73	0.64	4	45.00	110.00	-5.24	-3.04	-13.57	-21.43	4
45.00	120.00	-8.47	-7.77	-6.12	1.79	4	45.00	120.00	-9.12	-3.48	-10.18	-14.35	4
45.00	130.00	-7.31	-6.92	-8.12	1.85	4	45.00	130.00	-15.58	-5.62	-7.32	-6.46	4
45.00	140.00	-6.26	-7.05	-10.65	0.62	4	45.00	140.00	-22.14	-6.54	-4.16	-4.37	4
45.00	150.00	-5.79	-8.30	-12.47	-0.84	4	45.00	150.00	-22.04	-4.79	-1.63	-3.88	4
45.00	160.00	-4.99	-12.84	-13.31	-2.67	4	45.00	160.00	-23.93	-3.69	0.06	-3.69	4
45.00	170.00	-4.08	-27.00	-12.14	-5.07	4	45.00	170.00	-21.33	-3.79	0.38	-2.58	4
45.00	180.00	-3.37	-15.49	-8.87	-8.84	4	45.00	180.00	-11.43	-5.27	-0.05	-1.62	4
45.00	190.00	-3.00	-10.46	-5.70	-13.63	4	45.00	190.00	-5.59	-8.77	-0.85	-2.16	4
45.00	200.00	-3.31	-7.44	-3.70	-16.62	4	45.00	200.00	-2.17	-12.52	-1.18	-3.36	4
45.00	210.00	-3.18	-7.16	-2.76	-23.18	4	45.00	210.00	-0.18	-15.18	-1.61	-3.94	4
45.00	220.00	-3.92	-7.64	-2.31	-16.36	4	45.00	220.00	0.78	-10.82	-3.14	-4.10	4
45.00	230.00	-6.64	-9.27	-1.42	-11.34	4	45.00	230.00	1.52	-7.71	-4.38	-4.29	4
45.00	240.00	-11.51	-8.30	-0.51	-8.16	4	45.00	240.00	2.36	-6.19	-3.92	-6.74	4
45.00	250.00	-11.21	-7.79	0.69	-6.24	4	45.00	250.00	2.39	-5.32	-4.83	-18.99	4
45.00	260.00	-6.63	-8.54	1.73	-6.77	4	45.00	260.00	0.56	-5.68	-9.66	-18.15	4
45.00	270.00	-5.22	-9.68	2.66	-7.13	4	45.00	270.00	-2.82	-3.41	-28.84	-17.02	4
45.00	280.00	-4.75	-10.67	3.04	-7.05	4	45.00	280.00	-5.46	-0.13	-12.55	-10.18	4
45.00	290.00	-4.00	-11.18	2.43	-10.84	4	45.00	290.00	-9.78	1.22	-7.72	-12.33	4
45.00	300.00	-4.05	-10.37	1.83	-21.91	4	45.00	300.00	-14.16	0.71	-7.41	-15.88	4
45.00	310.00	-4.01	-10.73	1.07	-16.87	4	45.00	310.00	-13.19	-0.26	-7.50	-13.27	4
45.00	320.00	-3.72	-13.49	0.25	-8.75	4	45.00	320.00	-14.58	-1.00	-5.12	-26.39	4
45.00	330.00	-3.20	-15.93	-1.43	-9.24	4	45.00	330.00	-14.56	-0.95	-4.40	-10.52	4
45.00	340.00	-2.00	-14.99	-2.99	-13.95	4	45.00	340.00	-12.79	-0.57	-3.52	-6.92	4
45.00	350.00	-1.39	-13.36	-3.77	-20.37	4	45.00	350.00	-12.44	-0.35	-2.92	-6.14	4
60.00	0.00	-0.24	-11.00	-6.41	-16.35	4	60.00	0.00	-10.91	-0.62	-2.86	-4.47	4
60.00	10.00	-0.18	-10.39	-8.80	-20.19	4	60.00	10.00	-10.11	-1.78	-3.30	-5.59	4
60.00	20.00	0.52	-10.42	-19.17	-19.02	4	60.00	20.00	-8.20	-3.59	-5.50	-7.83	4
60.00	30.00	0.93	-13.13	-13.11	-15.17	4	60.00	30.00	-5.67	-5.90	-11.10	-4.13	4
60.00	40.00	-0.26	-16.39	-8.40	-8.57	4	60.00	40.00	-2.49	-10.31	-15.40	-0.35	4
60.00	50.00	-3.11	-15.61	-7.80	-3.95	4	60.00	50.00	-0.57	-13.73	-7.46	-0.43	4
60.00	60.00	-4.42	-13.73	-6.57	-2.58	4	60.00	60.00	-1.52	-14.01	-8.74	-1.96	4
60.00	70.00	-8.48	-13.25	-6.27	-1.90	4	60.00	70.00	-2.01	-13.93	-10.64	-1.83	4
60.00	80.00	-13.09	-17.54	-4.59	0.29	4	60.00	80.00	-2.19	-11.80	-15.06	-4.04	4
60.00	90.00	-6.97	-21.67	-5.16	0.12	4	60.00	90.00	-4.56	-12.02	-23.09	-6.65	4
60.00	100.00	-11.82	-12.00	-6.39	0.22	4	60.00	100.00	-7.18	-7.98	-14.87	-9.41	4
60.00	110.00	-16.05	-10.84	-5.99	0.54	4	60.00	110.00	-8.33	-5.67	-12.97	-7.37	4
60.00	120.00	-9.04	-11.47	-4.54	0.84	4	60.00	120.00	-11.39	-5.01	-11.15	-7.50	4
60.00	130.00	-8.10	-11.21	-4.19	1.08	4	60.00	130.00	-8.14	-5.47	-6.62	-8.00	4
60.00	140.00	-6.36	-11.00	-5.97	1.02	4	60.00	140.00	-7.21	-5.92	-6.35	-3.93	4
60.00	150.00	-7.43	-6.77	-9.09	0.24	4	60.00	150.00	-9.89	-5.46	-6.03	-0.87	4
60.00	160.00	-9.68	-7.46	-11.81	-0.98	4	60.00	160.00	-12.68	-1.90	-4.42	-0.71	4
60.00	170.00	-10.64	-11.00	-11.98	-3.10	4	60.00	170.00	-18.07	-1.54	-3.28	-0.61	4
60.00	180.00	-11.22	-9.09	-11.82	-4.67	4	60.00	180.00	-16.80	-3.91	-3.47	-0.11	4

60.00	190.00	-11.05	-6.07	-9.17	-5.59	4	60.00	190.00	-8.26	-9.12	-4.59	0.23	4
60.00	200.00	-8.28	-6.07	-5.10	-6.54	4	60.00	200.00	-4.51	-18.79	-5.52	0.16	4
60.00	210.00	-5.48	-7.09	-1.58	-8.76	4	60.00	210.00	-2.26	-9.15	-8.40	-0.09	4
60.00	220.00	-2.82	-8.09	-0.37	-10.90	4	60.00	220.00	0.58	-4.84	-14.40	-0.68	4
60.00	230.00	-1.94	-11.30	-0.22	-14.19	4	60.00	230.00	2.20	-3.94	-14.23	-0.99	4
60.00	240.00	-3.42	-24.15	0.32	-15.85	4	60.00	240.00	2.20	-5.36	-11.53	-1.80	4
60.00	250.00	-5.38	-22.26	0.76	-14.92	4	60.00	250.00	1.96	-6.76	-8.24	-4.68	4
60.00	260.00	-6.58	-17.69	1.54	-14.41	4	60.00	260.00	1.14	-5.90	-7.69	-10.55	4
60.00	270.00	-10.17	-10.68	3.05	-15.78	4	60.00	270.00	-1.30	-5.97	-21.54	-15.97	4
60.00	280.00	-9.25	-10.86	2.26	-15.31	4	60.00	280.00	-3.33	-2.87	-18.36	-17.18	4
60.00	290.00	-6.69	-13.53	1.04	-11.44	4	60.00	290.00	-6.86	0.48	-11.03	-13.37	4
60.00	300.00	-5.92	-14.70	-0.42	-8.74	4	60.00	300.00	-7.10	1.40	-11.09	-9.82	4
60.00	310.00	-6.84	-18.66	0.23	-7.65	4	60.00	310.00	-9.49	1.10	-12.02	-11.57	4
60.00	320.00	-8.27	-30.89	0.07	-12.16	4	60.00	320.00	-12.65	0.97	-7.83	-8.51	4
60.00	330.00	-8.37	-17.18	-1.69	-20.67	4	60.00	330.00	-9.81	1.89	-5.22	-11.55	4
60.00	340.00	-5.06	-13.18	-3.10	-29.87	4	60.00	340.00	-10.01	2.55	-6.06	-11.48	4
60.00	350.00	-1.74	-11.18	-2.23	-19.73	4	60.00	350.00	-12.20	2.52	-6.14	-5.98	4
75.00	0.00	0.36	-13.79	-6.64	-21.36	4	75.00	0.00	-13.52	-0.94	-1.83	-7.69	4
75.00	10.00	-1.38	-18.55	-12.63	-21.16	4	75.00	10.00	-10.82	-3.28	-4.02	-6.09	4
75.00	20.00	-0.31	-17.48	-18.74	-29.70	4	75.00	20.00	-9.66	-5.99	-12.27	-1.62	4
75.00	30.00	0.60	-14.09	-11.44	-12.36	4	75.00	30.00	-9.23	-8.54	-12.55	-0.12	4
75.00	40.00	-2.48	-13.24	-9.86	-9.04	4	75.00	40.00	-3.93	-11.11	-6.37	-1.76	4
75.00	50.00	-6.08	-12.70	-9.42	-5.65	4	75.00	50.00	-1.86	-18.63	-7.04	-2.66	4
75.00	60.00	-2.46	-14.04	-12.78	-1.00	4	75.00	60.00	-2.59	-11.37	-9.47	-4.90	4
75.00	70.00	-4.94	-20.97	-8.78	0.42	4	75.00	70.00	-2.02	-8.03	-16.72	-6.80	4
75.00	80.00	-10.07	-21.35	-9.97	2.07	4	75.00	80.00	-3.82	-10.65	-18.85	-9.46	4
75.00	90.00	-14.09	-10.39	-6.66	1.37	4	75.00	90.00	-4.01	-9.79	-14.22	-8.78	4
75.00	100.00	-12.6	-7.82	-5.73	3.14	4	75.00	100.00	-9.72	-6.00	-11.81	-8.22	4
75.00	110.00	-11.1	-7.43	-5.03	1.36	4	75.00	110.00	-12.12	-2.96	-17.84	-5.91	4
75.00	120.00	-16.65	-9.00	-6.62	1.87	4	75.00	120.00	-7.54	-0.66	-9.59	-8.45	4
75.00	130.00	-23.17	-12.18	-7.10	2.51	4	75.00	130.00	-7.26	-2.18	-5.37	-7.12	4
75.00	140.00	-15.96	-8.71	-5.69	1.93	4	75.00	140.00	-8.88	-5.22	-3.43	-6.93	4
75.00	150.00	-11.98	-9.34	-5.90	0.77	4	75.00	150.00	-9.52	-3.45	-2.13	-4.93	4
75.00	160.00	-9.04	-19.51	-6.58	-0.88	4	75.00	160.00	-9.79	-3.03	-2.79	-3.17	4
75.00	170.00	-7.82	-16.87	-6.24	-1.89	4	75.00	170.00	-10.74	-4.33	-3.42	-1.63	4
75.00	180.00	-10.24	-12.57	-5.80	-2.56	4	75.00	180.00	-7.64	-8.05	-2.60	-1.35	4
75.00	190.00	-24.24	-10.37	-4.39	-2.89	4	75.00	190.00	-3.07	-11.69	-2.16	-2.10	4
75.00	200.00	-6.34	-10.57	-2.87	-3.07	4	75.00	200.00	-0.90	-6.36	-2.02	-2.42	4
75.00	210.00	-2.24	-11.78	-0.87	-2.66	4	75.00	210.00	-0.40	-3.92	-2.91	-2.57	4
75.00	220.00	-1.84	-12.55	0.09	-2.85	4	75.00	220.00	-0.95	-2.50	-8.61	-2.94	4
75.00	230.00	-4.57	-12.90	0.68	-5.18	4	75.00	230.00	-2.18	-1.87	-36.26	-2.73	4
75.00	240.00	-7.32	-12.47	0.94	-7.20	4	75.00	240.00	-1.84	-2.50	-16.24	-3.75	4
75.00	250.00	-7.11	-10.67	0.38	-6.83	4	75.00	250.00	-1.43	-2.99	-20.45	-6.41	4
75.00	260.00	-10.24	-9.15	0.59	-9.74	4	75.00	260.00	-1.60	-4.72	-13.39	-11.64	4
75.00	270.00	-10.24	-12.44	0.77	-12.74	4	75.00	270.00	-2.82	-1.67	-19.87	-23.87	4
75.00	280.00	-6.72	-17.90	1.18	-9.83	4	75.00	280.00	-5.49	1.29	-26.40	-14.47	4
75.00	290.00	-4.92	-37.38	1.43	-11.49	4	75.00	290.00	-7.05	2.35	-12.08	-11.17	4
75.00	300.00	-2.38	-19.25	-0.75	-20.24	4	75.00	300.00	-8.98	1.68	-10.42	-8.82	4
75.00	310.00	-2.07	-17.35	-0.58	-10.55	4	75.00	310.00	-9.29	2.45	-8.41	-5.30	4
75.00	320.00	-4.91	-13.93	-2.27	-14.87	4	75.00	320.00	-5.76	3.23	-3.50	-4.34	4
75.00	330.00	-2.73	-10.34	-5.78	-14.81	4	75.00	330.00	-6.36	3.72	-4.36	-7.14	4
75.00	340.00	0.79	-10.22	-4.99	-17.61	4	75.00	340.00	-8.74	3.10	-7.58	-12.72	4
75.00	350.00	1.81	-11.57	-4.13	-18.03	4	75.00	350.00	-11.63	2.07	-8.00	-12.30	4
90.00	0.00	-0.19	-24.53	-8.99	-26.25	4	90.00	0.00	-13.07	-2.55	-3.73	-3.91	4
90.00	10.00	-2.62	-23.95	-10.24	-18.05	4	90.00	10.00	-12.79	-3.61	-3.75	-5.39	4
90.00	20.00	-5.24	-23.70	-12.08	-11.20	4	90.00	20.00	-11.23	-5.53	-7.36	-5.98	4

90.00	30.00	-2.13	-12.70	-12.55	-11.18	4	90.00	30.00	-9.52	-6.94	-12.25	-3.44	4
90.00	40.00	0.02	-12.54	-9.74	-8.79	4	90.00	40.00	-10.13	-6.35	-5.44	-4.78	4
90.00	50.00	-1.80	-14.49	-10.99	-6.14	4	90.00	50.00	-6.93	-5.29	-9.16	-9.45	4
90.00	60.00	-3.42	-10.84	-10.84	-5.41	4	90.00	60.00	-4.77	-6.33	-9.26	-9.03	4
90.00	70.00	-2.07	-9.50	-17.04	-0.61	4	90.00	70.00	-4.95	-11.56	-7.66	-11.47	4
90.00	80.00	-7.25	-10.68	-9.8	-0.51	4	90.00	80.00	-3.37	-10.32	-23.05	-5.97	4
90.00	90.00	-14.41	-15.85	-6.41	1.00	4	90.00	90.00	-2.51	-5.09	-13.56	-12.68	4
90.00	100.00	-14.24	-11.28	-2.22	1.26	4	90.00	100.00	-2.41	-3.16	-11.36	-16.17	4
90.00	110.00	-9.04	-16.70	-3.00	2.48	4	90.00	110.00	-3.84	-1.80	-24.18	-20.83	4
90.00	120.00	-5.76	-14.31	-4.13	1.52	4	90.00	120.00	-6.10	-2.41	-16.09	-24.58	4
90.00	130.00	-7.21	-20.69	-4.66	1.31	4	90.00	130.00	-11.27	-1.93	-8.46	-12.74	4
90.00	140.00	-8.55	-19.21	-3.98	-0.68	4	90.00	140.00	-8.31	-1.26	-3.30	-18.20	4
90.00	150.00	-7.14	-15.73	-4.53	-0.96	4	90.00	150.00	-5.57	-2.36	-0.86	-10.69	4
90.00	160.00	-4.96	-24.35	-4.84	0.87	4	90.00	160.00	-6.80	-6.41	-2.22	-4.61	4
90.00	170.00	-4.98	-16.53	-3.85	0.00	4	90.00	170.00	-11.21	-11.47	-4.51	-4.60	4
90.00	180.00	-7.82	-9.12	-2.81	-1.94	4	90.00	180.00	-16.13	-14.08	-5.62	-5.14	4
90.00	190.00	-11.29	-7.54	-1.96	-3.50	4	90.00	190.00	-12.31	-11.87	-5.44	-4.03	4
90.00	200.00	-6.98	-9.05	-1.23	-3.92	4	90.00	200.00	-6.54	-9.43	-5.44	-4.43	4
90.00	210.00	-2.33	-11.14	-0.49	-3.84	4	90.00	210.00	-2.93	-7.06	-4.42	-3.58	4
90.00	220.00	-0.59	-10.11	0.08	-2.78	4	90.00	220.00	-1.61	-3.65	-3.37	-2.60	4
90.00	230.00	-0.82	-9.14	0.19	-2.40	4	90.00	230.00	-3.62	-2.65	-5.59	-2.62	4
90.00	240.00	-1.96	-6.79	-0.12	-2.19	4	90.00	240.00	-6.40	-0.78	-10.83	-3.23	4
90.00	250.00	-2.32	-5.99	-1.05	-1.35	4	90.00	250.00	-4.59	0.33	-10.39	-6.67	4
90.00	260.00	-2.58	-8.77	-1.99	-3.04	4	90.00	260.00	-3.75	-0.06	-8.72	-11.50	4
90.00	270.00	-3.88	-13.45	-0.80	-5.51	4	90.00	270.00	-2.58	0.41	-14.53	-16.40	4
90.00	280.00	-2.51	-15.30	-0.90	-8.51	4	90.00	280.00	-3.52	2.39	-13.12	-22.01	4
90.00	290.00	-2.52	-12.78	0.18	-13.38	4	90.00	290.00	-3.75	3.07	-11.12	-16.60	4
90.00	300.00	-2.86	-20.97	-0.47	-23.63	4	90.00	300.00	-5.83	2.56	-6.81	-13.66	4
90.00	310.00	-0.40	-9.59	-1.77	-32.40	4	90.00	310.00	-7.55	2.65	-10.44	-9.88	4
90.00	320.00	-1.33	-6.00	-2.72	-15.60	4	90.00	320.00	-6.23	3.59	-17.11	-9.93	4
90.00	330.00	-4.25	-8.57	-4.39	-13.30	4	90.00	330.00	-9.34	3.24	-10.10	-7.53	4
90.00	340.00	0.16	-18.18	-7.76	-12.20	4	90.00	340.00	-16.16	1.88	-8.14	-17.90	4
90.00	350.00	2.95	-25.10	-9.62	-13.29	4	90.00	350.00	-23.47	-0.28	-10.43	-10.22	4
105.00	0.00	-2.86	-12.35	-15.73	-19.53	4	105.00	0.00	-13.18	-4.33	-12.70	-11.12	4
105.00	10.00	-14.09	-10.64	-17.15	-13.23	4	105.00	10.00	-9.86	-4.30	-13.48	-8.64	4
105.00	20.00	-4.14	-8.99	-23.20	-8.42	4	105.00	20.00	-7.25	-4.59	-40.17	-13.87	4
105.00	30.00	0.47	-8.85	-12.92	-6.74	4	105.00	30.00	-5.71	-2.78	-9.11	-10.35	4
105.00	40.00	-0.13	-12.65	-10.45	-5.99	4	105.00	40.00	-5.07	-2.53	-7.70	-7.72	4
105.00	50.00	-2.66	-13.61	-23.49	-7.29	4	105.00	50.00	-2.81	-4.21	-13.98	-12.43	4
105.00	60.00	-1.75	-11.35	-7.45	-5.03	4	105.00	60.00	-3.65	-11.07	-9.02	-26.00	4
105.00	70.00	-4.19	-9.88	-4.71	-0.55	4	105.00	70.00	-4.79	-6.12	-11.51	-7.57	4
105.00	80.00	-7.52	-9.23	-2.49	0.29	4	105.00	80.00	-1.39	-2.68	-33.36	-11.19	4
105.00	90.00	-4.48	-10.38	-2.29	1.51	4	105.00	90.00	-1.84	-1.17	-21.86	-23.07	4
105.00	100.00	-5.4	-8.11	-2.53	0.79	4	105.00	100.00	-2.46	-3.66	-20.03	-16.68	4
105.00	110.00	-7.3	-10.61	-2.15	2.68	4	105.00	110.00	-4.15	-3.55	-11.08	-14.25	4
105.00	120.00	-9.93	-23.37	-0.85	0.71	4	105.00	120.00	-8.75	-3.52	-9.62	-23.53	4
105.00	130.00	-5.44	-25.14	-0.54	1.20	4	105.00	130.00	-10.42	-1.43	-5.10	-10.96	4
105.00	140.00	-1.93	-11.45	-1.71	0.93	4	105.00	140.00	-9.95	-0.63	-4.29	-9.68	4
105.00	150.00	-0.63	-11.40	-3.10	0.00	4	105.00	150.00	-12.00	-3.35	-4.68	-7.62	4
105.00	160.00	-1.31	-16.93	-3.00	-0.64	4	105.00	160.00	-36.44	-10.08	-5.23	-6.69	4
105.00	170.00	-4.54	-7.61	-2.64	-1.82	4	105.00	170.00	-15.68	-18.36	-5.92	-5.81	4
105.00	180.00	-13.35	-3.56	-2.76	-2.62	4	105.00	180.00	-20.54	-8.19	-7.65	-6.24	4
105.00	190.00	-12.64	-3.16	-2.77	-2.23	4	105.00	190.00	-19.89	-6.41	-15.10	-5.17	4
105.00	200.00	-4.27	-5.53	-3.06	-1.73	4	105.00	200.00	-12.25	-8.12	-15.01	-3.83	4
105.00	210.00	-2.29	-7.67	-2.63	-1.35	4	105.00	210.00	-8.44	-6.46	-10.75	-4.00	4
105.00	220.00	-2.30	-6.13	-0.22	-1.39	4	105.00	220.00	-9.35	-3.43	-8.51	-4.87	4

105.00	230.00	-2.74	-5.10	1.14	-1.80	4	105.00	230.00	-12.10	-1.49	-4.44	-5.42	4
105.00	240.00	-4.29	-4.74	1.37	-1.53	4	105.00	240.00	-9.81	-0.66	-7.93	-8.99	4
105.00	250.00	-5.81	-9.65	0.33	-2.79	4	105.00	250.00	-7.12	0.18	-19.54	-11.12	4
105.00	260.00	-6.09	-38.71	-1.75	-6.16	4	105.00	260.00	-6.11	1.06	-14.52	-11.24	4
105.00	270.00	-4.34	-19.99	-2.56	-5.58	4	105.00	270.00	-5.72	2.65	-15.03	-12.05	4
105.00	280.00	-4.69	-22.31	-0.48	-4.40	4	105.00	280.00	-5.72	2.89	-11.47	-24.53	4
105.00	290.00	-5.95	-15.27	1.29	-9.25	4	105.00	290.00	-5.82	2.18	-14.73	-24.14	4
105.00	300.00	-2.99	-18.93	0.27	-17.83	4	105.00	300.00	-7.79	2.62	-14.92	-12.28	4
105.00	310.00	-3.25	-7.20	-1.56	-19.23	4	105.00	310.00	-12.28	3.49	-10.90	-17.51	4
105.00	320.00	-4.62	-7.08	-2.69	-12.17	4	105.00	320.00	-26.69	3.04	-13.23	-18.26	4
105.00	330.00	-1.34	-16.56	-3.49	-18.72	4	105.00	330.00	-20.89	0.02	-15.56	-10.59	4
105.00	340.00	1.21	-33.86	-6.45	-13.08	4	105.00	340.00	-18.33	-3.51	-20.89	-10.53	4
105.00	350.00	1.55	-28.07	-8.65	-14.69	4	105.00	350.00	-20.64	-4.78	-32.12	-11.18	4
120.00	0.00	-5.80	-13.83	-13.76	-16.54	4	120.00	0.00	-7.16	-3.38	-16.23	-8.02	4
120.00	10.00	-12.34	-12.26	-12.52	-12.35	4	120.00	10.00	-5.16	-3.16	-12.73	-8.00	4
120.00	20.00	-10.71	-11.15	-10.91	-7.88	4	120.00	20.00	-3.44	-3.70	-12.70	-5.63	4
120.00	30.00	-2.05	-7.31	-16.34	-7.38	4	120.00	30.00	-2.56	-5.61	-27.97	-4.04	4
120.00	40.00	0.00	-5.24	-10.88	-8.13	4	120.00	40.00	-1.80	-5.90	-16.17	-3.39	4
120.00	50.00	-2.51	-4.82	-5.95	-8.72	4	120.00	50.00	-1.52	-4.51	-10.71	-5.59	4
120.00	60.00	-10.12	-5.29	-6.72	-6.57	4	120.00	60.00	-1.26	-3.84	-10.84	-17.17	4
120.00	70.00	-10.04	-4.89	-5.36	-3.34	4	120.00	70.00	-2.03	-5.91	-12.24	-16.12	4
120.00	80.00	-8.07	-6.25	-2.96	-1.55	4	120.00	80.00	-2.55	-9.63	-13.62	-12.56	4
120.00	90.00	-6.77	-8.95	-1.89	-0.17	4	120.00	90.00	-1.16	-4.14	-14.66	-20.47	4
120.00	100.00	-4.75	-7.42	-1.11	0.59	4	120.00	100.00	-1.89	-2.67	-17.27	-23.94	4
120.00	110.00	-5.33	-7.54	-1.80	-1.16	4	120.00	110.00	-2.82	-1.97	-18.41	-16.31	4
120.00	120.00	-7.73	-5.99	-2.80	-0.85	4	120.00	120.00	-5.33	-1.72	-18.46	-13.44	4
120.00	130.00	-6.81	-8.58	-2.64	-1.64	4	120.00	130.00	-5.18	-7.13	-15.28	-19.84	4
120.00	140.00	-3.07	-29.22	-3.97	-1.09	4	120.00	140.00	-7.29	-4.15	-3.21	-24.51	4
120.00	150.00	-0.70	-10.56	-5.54	-0.95	4	120.00	150.00	-15.09	-1.55	-1.49	-13.92	4
120.00	160.00	-0.42	-9.20	-4.88	-3.03	4	120.00	160.00	-10.55	-3.34	-2.12	-12.43	4
120.00	170.00	-1.20	-12.04	-4.95	-4.69	4	120.00	170.00	-6.72	-6.74	-2.49	-10.62	4
120.00	180.00	-2.81	-18.94	-4.97	-4.17	4	120.00	180.00	-6.13	-5.73	-3.16	-8.99	4
120.00	190.00	-6.91	-17.15	-5.37	-4.28	4	120.00	190.00	-8.45	-4.14	-5.09	-7.89	4
120.00	200.00	-15.64	-11.01	-5.96	-4.80	4	120.00	200.00	-20.22	-5.93	-9.99	-7.04	4
120.00	210.00	-10.66	-14.98	-6.38	-5.52	4	120.00	210.00	-13.86	-12.56	-14.01	-8.32	4
120.00	220.00	-5.59	-19.33	-5.93	-4.96	4	120.00	220.00	-8.83	-12.20	-7.46	-9.51	4
120.00	230.00	-3.59	-10.75	-3.35	-3.21	4	120.00	230.00	-9.12	-7.07	-6.19	-8.34	4
120.00	240.00	-3.47	-14.53	-0.46	-1.74	4	120.00	240.00	-10.11	-3.50	-9.74	-8.82	4
120.00	250.00	-3.85	-16.66	0.54	-1.56	4	120.00	250.00	-12.90	-0.50	-12.20	-10.83	4
120.00	260.00	-4.17	-9.09	-0.53	-1.89	4	120.00	260.00	-10.34	1.26	-8.33	-11.07	4
120.00	270.00	-4.36	-9.21	-1.39	-3.21	4	120.00	270.00	-10.73	1.83	-6.82	-15.73	4
120.00	280.00	-3.22	-9.28	-1.78	-8.95	4	120.00	280.00	-13.28	2.44	-17.29	-21.29	4
120.00	290.00	-3.55	-10.12	-0.68	-10.41	4	120.00	290.00	-9.40	2.06	-19.58	-16.74	4
120.00	300.00	-4.46	-7.80	-1.35	-6.91	4	120.00	300.00	-11.41	1.24	-13.98	-20.04	4
120.00	310.00	-6.00	-5.93	-3.39	-5.16	4	120.00	310.00	-10.83	0.89	-7.12	-24.86	4
120.00	320.00	-11.66	-6.99	-5.98	-6.02	4	120.00	320.00	-7.64	1.33	-6.19	-16.29	4
120.00	330.00	-10.43	-11.49	-6.06	-9.55	4	120.00	330.00	-8.64	0.51	-7.41	-14.65	4
120.00	340.00	-3.63	-8.47	-6.24	-17.78	4	120.00	340.00	-9.59	-0.87	-9.97	-8.72	4
120.00	350.00	-1.29	-8.63	-12.25	-18.09	4	120.00	350.00	-10.79	-1.55	-20.34	-6.75	4
135.00	0.00	-16.63	-6.77	-3.91	-13.80	4	135.00	0.00	-5.75	-2.33	-9.84	-8.47	4
135.00	10.00	-9.45	-11.65	-4.61	-12.69	4	135.00	10.00	-3.38	-3.00	-10.82	-7.20	4
135.00	20.00	-5.34	-11.71	-8.40	-10.15	4	135.00	20.00	-3.51	-4.94	-10.34	-8.18	4
135.00	30.00	-4.24	-4.52	-29.05	-8.36	4	135.00	30.00	-5.77	-7.01	-9.58	-10.26	4
135.00	40.00	-7.52	-3.40	-9.61	-8.77	4	135.00	40.00	-8.51	-7.25	-12.33	-11.61	4
135.00	50.00	-15.18	-4.91	-7.54	-7.89	4	135.00	50.00	-6.95	-6.17	-16.07	-14.63	4
135.00	60.00	-12.38	-5.99	-7.06	-7.29	4	135.00	60.00	-3.57	-6.54	-20.03	-13.50	4

135.00	70.00	-7.27	-6.34	-5.15	-5.49	4	135.00	70.00	-4.13	-9.74	-17.37	-16.36	4
135.00	80.00	-5.56	-8.16	-3.71	-5.19	4	135.00	80.00	-5.73	-24.37	-10.26	-11.53	4
135.00	90.00	-5.60	-5.11	-2.04	-4.63	4	135.00	90.00	-3.41	-9.42	-11.99	-15.68	4
135.00	100.00	-4.45	-2.16	-1.65	-6.31	4	135.00	100.00	-2.62	-5.81	-15.97	-19.76	4
135.00	110.00	-5.81	-3.35	-2.44	-6.70	4	135.00	110.00	-5.92	-3.63	-10.44	-8.83	4
135.00	120.00	-7.01	-8.27	-4.57	-3.69	4	135.00	120.00	-11.91	-4.42	-9.42	-5.84	4
135.00	130.00	-5.03	-11.37	-6.07	-3.40	4	135.00	130.00	-18.45	-5.95	-9.36	-10.16	4
135.00	140.00	-2.23	-9.47	-5.96	-4.09	4	135.00	140.00	-27.60	-6.59	-8.17	-10.25	4
135.00	150.00	-0.10	-15.75	-5.79	-3.60	4	135.00	150.00	-14.20	-8.74	-6.25	-5.92	4
135.00	160.00	0.16	-14.62	-5.87	-3.34	4	135.00	160.00	-8.44	-8.22	-4.64	-4.28	4
135.00	170.00	-1.30	-9.24	-7.09	-3.55	4	135.00	170.00	-5.71	-5.84	-5.32	-4.15	4
135.00	180.00	-4.02	-8.71	-9.81	-3.64	4	135.00	180.00	-5.46	-4.52	-7.01	-4.57	4
135.00	190.00	-8.39	-8.58	-13.17	-3.25	4	135.00	190.00	-7.96	-4.71	-10.96	-5.39	4
135.00	200.00	-14.29	-7.41	-14.05	-2.58	4	135.00	200.00	-15.19	-5.27	-16.47	-5.81	4
135.00	210.00	-8.72	-5.81	-11.42	-2.16	4	135.00	210.00	-16.25	-7.03	-9.73	-6.63	4
135.00	220.00	-5.75	-3.59	-8.30	-2.02	4	135.00	220.00	-8.40	-8.45	-6.55	-8.16	4
135.00	230.00	-6.86	-2.92	-4.21	-2.07	4	135.00	230.00	-7.58	-6.65	-6.91	-7.96	4
135.00	240.00	-10.77	-3.30	-1.16	-1.96	4	135.00	240.00	-13.22	-3.55	-9.64	-5.77	4
135.00	250.00	-16.31	-4.57	-0.90	-1.10	4	135.00	250.00	-16.52	-0.91	-14.99	-4.71	4
135.00	260.00	-15.39	-7.23	-2.79	-1.43	4	135.00	260.00	-17.37	-0.72	-12.00	-7.42	4
135.00	270.00	-10.92	-12.50	-4.50	-4.03	4	135.00	270.00	-11.51	-3.44	-9.29	-18.20	4
135.00	280.00	-10.95	-12.67	-5.22	-5.91	4	135.00	280.00	-9.47	-1.29	-10.50	-25.52	4
135.00	290.00	-9.02	-8.28	-4.37	-5.50	4	135.00	290.00	-14.32	0.98	-14.01	-19.69	4
135.00	300.00	-7.94	-7.39	-4.82	-3.92	4	135.00	300.00	-14.63	1.15	-13.30	-13.40	4
135.00	310.00	-9.13	-7.57	-8.21	-3.81	4	135.00	310.00	-9.07	-0.57	-5.08	-14.50	4
135.00	320.00	-11.20	-7.83	-7.69	-5.55	4	135.00	320.00	-9.13	-1.74	-6.01	-15.51	4
135.00	330.00	-11.40	-8.55	-8.30	-11.88	4	135.00	330.00	-16.39	-1.33	-10.37	-11.50	4
135.00	340.00	-9.17	-11.83	-8.67	-14.73	4	135.00	340.00	-22.90	-2.31	-12.98	-10.28	4
135.00	350.00	-9.65	-15.63	-8.49	-13.91	4	135.00	350.00	-15.70	-3.59	-13.27	-10.29	4
150.00	0.00	-10.46	-12.19	-17.94	-12.00	4	150.00	0.00	-6.96	-5.35	-11.02	-6.90	4
150.00	10.00	-11.41	-14.75	-19.43	-11.94	4	150.00	10.00	-5.04	-6.18	-10.17	-6.37	4
150.00	20.00	-21.06	-13.30	-17.82	-12.03	4	150.00	20.00	-2.67	-9.02	-8.45	-5.20	4
150.00	30.00	-10.94	-8.28	-20.04	-13.03	4	150.00	30.00	-1.22	-11.43	-7.58	-5.47	4
150.00	40.00	-4.93	-6.47	-16.59	-16.80	4	150.00	40.00	-1.47	-11.29	-7.76	-7.75	4
150.00	50.00	-3.12	-5.78	-12.95	-23.74	4	150.00	50.00	-4.54	-10.16	-6.66	-11.43	4
150.00	60.00	-3.69	-5.91	-10.07	-23.97	4	150.00	60.00	-8.42	-10.43	-5.88	-14.97	4
150.00	70.00	-6.01	-7.32	-8.11	-16.40	4	150.00	70.00	-5.22	-9.32	-6.36	-15.95	4
150.00	80.00	-6.01	-11.73	-5.44	-11.75	4	150.00	80.00	-2.18	-5.84	-7.30	-17.70	4
150.00	90.00	-4.20	-9.96	-2.43	-9.41	4	150.00	90.00	-2.10	-5.12	-8.98	-20.28	4
150.00	100.00	-4.35	-6.49	-1.88	-8.73	4	150.00	100.00	-3.92	-6.63	-13.17	-18.75	4
150.00	110.00	-5.66	-7.73	-2.62	-9.25	4	150.00	110.00	-5.25	-8.34	-17.97	-24.26	4
150.00	120.00	-6.49	-11.62	-3.06	-8.09	4	150.00	120.00	-5.92	-5.72	-16.87	-17.12	4
150.00	130.00	-5.64	-8.34	-3.44	-7.55	4	150.00	130.00	-5.76	-3.37	-16.22	-11.92	4
150.00	140.00	-3.94	-6.11	-4.96	-9.56	4	150.00	140.00	-5.54	-2.39	-14.28	-8.63	4
150.00	150.00	-2.65	-6.20	-14.58	-11.66	4	150.00	150.00	-5.90	-1.86	-12.11	-6.76	4
150.00	160.00	-1.94	-6.98	-14.28	-9.88	4	150.00	160.00	-6.28	-2.21	-13.60	-5.92	4
150.00	170.00	-2.23	-6.99	-11.46	-7.56	4	150.00	170.00	-5.60	-4.62	-14.98	-5.99	4
150.00	180.00	-3.06	-5.44	-10.50	-5.59	4	150.00	180.00	-4.21	-8.43	-15.78	-7.11	4
150.00	190.00	-5.90	-3.98	-10.66	-4.56	4	150.00	190.00	-3.80	-10.36	-15.26	-9.33	4
150.00	200.00	-10.76	-3.62	-11.10	-4.64	4	150.00	200.00	-5.17	-10.36	-13.38	-14.20	4
150.00	210.00	-10.92	-4.62	-10.64	-4.59	4	150.00	210.00	-6.97	-12.34	-10.91	-15.34	4
150.00	220.00	-5.71	-5.75	-8.40	-4.25	4	150.00	220.00	-7.07	-14.31	-8.62	-9.24	4
150.00	230.00	-3.28	-7.39	-6.17	-3.85	4	150.00	230.00	-4.58	-11.76	-8.43	-6.38	4
150.00	240.00	-3.57	-8.50	-4.83	-3.40	4	150.00	240.00	-3.32	-8.79	-10.25	-5.38	4
150.00	250.00	-6.17	-8.66	-4.52	-3.33	4	150.00	250.00	-3.48	-5.92	-12.77	-5.61	4
150.00	260.00	-11.98	-10.31	-4.19	-3.54	4	150.00	260.00	-5.00	-4.18	-16.83	-9.02	4

150.00	270.00	-21.18	-13.65	-3.76	-3.35	4	150.00	270.00	-8.69	-3.79	-13.59	-16.65	4
150.00	280.00	-20.38	-19.38	-3.96	-2.86	4	150.00	280.00	-13.27	-4.07	-11.11	-19.19	4
150.00	290.00	-13.27	-19.40	-5.83	-2.68	4	150.00	290.00	-13.02	-1.78	-8.45	-15.58	4
150.00	300.00	-10.15	-11.55	-7.88	-3.23	4	150.00	300.00	-10.45	1.53	-6.91	-17.51	4
150.00	310.00	-12.04	-6.82	-9.30	-4.51	4	150.00	310.00	-5.89	3.14	-8.93	-15.86	4
150.00	320.00	-23.10	-4.46	-8.81	-5.33	4	150.00	320.00	-4.00	3.48	-15.23	-9.85	4
150.00	330.00	-15.78	-3.88	-8.42	-5.68	4	150.00	330.00	-5.41	2.12	-14.52	-7.04	4
150.00	340.00	-11.89	-4.42	-8.30	-6.97	4	150.00	340.00	-10.52	-0.80	-10.71	-6.29	4
150.00	350.00	-10.46	-5.71	-9.38	-9.26	4	150.00	350.00	-14.12	-3.60	-10.80	-6.68	4
165.00	0.00	-4.08	-0.57	-16.13	-16.06	4	165.00	0.00	-5.88	-3.55	-12.28	-7.90	4
165.00	10.00	-5.07	-1.55	-14.53	-24.76	4	165.00	10.00	-3.49	-5.95	-12.32	-8.39	4
165.00	20.00	-7.81	-2.65	-12.33	-28.85	4	165.00	20.00	-2.29	-7.50	-12.31	-10.26	4
165.00	30.00	-13.36	-3.21	-10.56	-19.50	4	165.00	30.00	-1.66	-8.19	-10.58	-12.77	4
165.00	40.00	-17.20	-3.31	-8.91	-16.12	4	165.00	40.00	-1.40	-9.18	-11.45	-14.08	4
165.00	50.00	-10.09	-3.48	-7.89	-16.73	4	165.00	50.00	-1.52	-10.07	-12.88	-14.19	4
165.00	60.00	-7.06	-3.62	-7.03	-19.04	4	165.00	60.00	-1.88	-10.78	-13.25	-14.06	4
165.00	70.00	-6.22	-3.51	-6.14	-21.27	4	165.00	70.00	-2.31	-10.69	-13.99	-14.38	4
165.00	80.00	-5.82	-2.87	-6.03	-20.99	4	165.00	80.00	-2.36	-11.70	-15.09	-18.56	4
165.00	90.00	-5.23	-2.61	-2.40	-15.63	4	165.00	90.00	-2.02	-14.74	-13.59	-20.22	4
165.00	100.00	-3.95	-2.71	-4.10	-12.08	4	165.00	100.00	-2.09	-16.88	-24.98	-17.05	4
165.00	110.00	-2.83	-4.00	-5.85	-11.24	4	165.00	110.00	-3.03	-11.50	-27.95	-16.71	4
165.00	120.00	-2.03	-5.93	-8.35	-13.28	4	165.00	120.00	-4.63	-8.00	-22.46	-19.46	4
165.00	130.00	-1.56	-8.79	-10.11	-14.03	4	165.00	130.00	-5.78	-6.34	-21.39	-20.93	4
165.00	140.00	-1.40	-12.07	-11.45	-12.64	4	165.00	140.00	-6.10	-6.22	-19.45	-17.78	4
165.00	150.00	-2.10	-19.39	-12.05	-10.90	4	165.00	150.00	-4.85	-6.87	-19.65	-14.12	4
165.00	160.00	-3.77	-24.58	-10.99	-9.47	4	165.00	160.00	-3.38	-8.23	-18.48	-12.40	4
165.00	170.00	-7.33	-14.33	-9.71	-8.64	4	165.00	170.00	-2.64	-10.60	-15.00	-11.47	4
165.00	180.00	-15.85	-10.66	-9.01	-7.56	4	165.00	180.00	-2.74	-13.14	-11.85	-11.79	4
165.00	190.00	-13.51	-9.56	-8.50	-6.67	4	165.00	190.00	-3.62	-15.82	-9.16	-15.03	4
165.00	200.00	-6.38	-9.27	-8.88	-5.90	4	165.00	200.00	-5.12	-18.85	-7.43	-23.83	4
165.00	210.00	-3.28	-8.96	-10.01	-6.11	4	165.00	210.00	-6.57	-26.82	-7.00	-28.93	4
165.00	220.00	-1.77	-8.68	-10.81	-6.67	4	165.00	220.00	-6.44	-24.06	-7.93	-22.80	4
165.00	230.00	-1.64	-8.77	-10.77	-7.65	4	165.00	230.00	-5.39	-13.33	-9.82	-19.83	4
165.00	240.00	-2.48	-9.21	-10.55	-8.84	4	165.00	240.00	-4.55	-9.02	-11.11	-16.87	4
165.00	250.00	-4.19	-9.82	-9.77	-8.90	4	165.00	250.00	-4.62	-6.52	-12.76	-14.20	4
165.00	260.00	-6.64	-10.41	-9.40	-9.70	4	165.00	260.00	-4.84	-4.56	-10.78	-14.03	4
165.00	270.00	-10.00	-11.52	-9.62	-9.84	4	165.00	270.00	-5.79	-2.88	-9.22	-14.92	4
165.00	280.00	-12.88	-12.91	-10.69	-9.09	4	165.00	280.00	-7.06	-1.24	-9.24	-16.08	4
165.00	290.00	-13.78	-15.89	-12.88	-8.86	4	165.00	290.00	-9.07	0.33	-11.38	-19.07	4
165.00	300.00	-14.14	-27.23	-15.27	-9.64	4	165.00	300.00	-10.23	1.61	-12.22	-19.86	4
165.00	310.00	-13.60	-15.70	-18.68	-10.10	4	165.00	310.00	-10.47	2.67	-9.95	-19.33	4
165.00	320.00	-11.00	-7.90	-24.59	-10.35	4	165.00	320.00	-10.74	3.01	-9.00	-15.96	4
165.00	330.00	-7.86	-3.88	-21.15	-10.23	4	165.00	330.00	-11.16	2.64	-10.65	-12.31	4
165.00	340.00	-6.47	-1.87	-18.64	-11.16	4	165.00	340.00	-11.47	1.67	-13.87	-10.41	4
165.00	350.00	-5.72	-1.57	-17.39	-12.33	4	165.00	350.00	-11.26	0.84	-16.32	-10.29	4
180.00	0.00	-11.77	-3.73	-10.89	-17.73	4	180.00	0.00	-5.78	-6.64	-20.67	-16.11	4
180.00	10.00	-11.63	-3.22	-10.54	-18.06	4	180.00	10.00	-5.69	-7.07	-18.75	-15.88	4
180.00	20.00	-11.64	-2.63	-10.53	-17.20	4	180.00	20.00	-5.74	-8.63	-14.73	-16.12	4
180.00	30.00	-11.66	-2.43	-10.80	-16.01	4	180.00	30.00	-5.82	-11.56	-13.29	-15.80	4
180.00	40.00	-11.38	-2.44	-11.48	-14.57	4	180.00	40.00	-6.01	-14.34	-12.71	-16.93	4
180.00	50.00	-10.89	-2.93	-13.17	-13.73	4	180.00	50.00	-6.66	-13.22	-12.42	-19.54	4
180.00	60.00	-9.51	-3.44	-15.89	-14.03	4	180.00	60.00	-7.46	-11.07	-11.52	-23.52	4
180.00	70.00	-8.59	-4.17	-17.91	-13.68	4	180.00	70.00	-8.63	-8.66	-10.24	-27.10	4
180.00	80.00	-8.02	-4.99	-22.06	-14.66	4	180.00	80.00	-10.12	-6.95	-9.50	-24.04	4
180.00	90.00	-7.36	-5.94	-23.51	-15.62	4	180.00	90.00	-11.13	-5.56	-9.39	-21.08	4
180.00	100.00	-6.77	-8.12	-20.78	-17.24	4	180.00	100.00	-12.70	-4.64	-9.66	-18.40	4

180.00	110.00	-6.65	-11.37	-17.39	-20.05	4	180.00	110.00	-14.36	-3.87	-10.57	-17.28	4
180.00	120.00	-6.63	-15.28	-15.43	-18.57	4	180.00	120.00	-14.07	-3.69	-11.55	-18.27	4
180.00	130.00	-6.84	-15.80	-13.93	-14.76	4	180.00	130.00	-12.74	-3.77	-13.51	-20.32	4
180.00	140.00	-7.40	-13.34	-13.33	-12.92	4	180.00	140.00	-10.55	-4.71	-16.36	-24.05	4
180.00	150.00	-8.51	-10.85	-11.69	-12.10	4	180.00	150.00	-8.67	-5.95	-12.22	-27.01	4
180.00	160.00	-10.36	-8.79	-12.98	-12.41	4	180.00	160.00	-7.49	-7.49	-11.41	-30.19	4
180.00	170.00	-13.58	-7.28	-14.88	-12.79	4	180.00	170.00	-6.70	-8.57	-10.75	-25.76	4
180.00	180.00	-19.47	-6.21	-17.41	-13.77	4	180.00	180.00	-6.21	-10.13	-10.01	-26.04	4
180.00	190.00	-26.23	-5.51	-22.53	-14.41	4	180.00	190.00	-6.38	-12.27	-9.22	-21.63	4
180.00	200.00	-14.96	-5.13	-35.42	-15.45	4	180.00	200.00	-6.50	-13.38	-9.01	-19.67	4
180.00	210.00	-11.56	-4.50	-22.89	-16.35	4	180.00	210.00	-6.98	-14.96	-9.90	-17.67	4
180.00	220.00	-9.31	-3.91	-16.51	-17.33	4	180.00	220.00	-8.12	-16.13	-10.74	-16.76	4
180.00	230.00	-7.84	-3.65	-12.17	-16.99	4	180.00	230.00	-9.96	-14.99	-10.51	-15.19	4
180.00	240.00	-6.83	-3.65	-9.14	-15.57	4	180.00	240.00	-12.15	-13.23	-10.14	-15.82	4
180.00	250.00	-6.13	-3.82	-7.97	-15.06	4	180.00	250.00	-15.82	-10.74	-10.99	-14.85	4
180.00	260.00	-5.43	-4.18	-7.40	-14.42	4	180.00	260.00	-19.14	-8.48	-14.46	-14.11	4
180.00	270.00	-4.98	-4.96	-7.85	-13.60	4	180.00	270.00	-18.69	-7.07	-17.79	-14.95	4
180.00	280.00	-4.89	-5.73	-9.32	-14.53	4	180.00	280.00	-14.52	-5.76	-17.74	-16.74	4
180.00	290.00	-5.35	-6.91	-11.93	-15.14	4	180.00	290.00	-11.41	-4.68	-15.70	-18.57	4
180.00	300.00	-6.26	-8.89	-13.85	-16.05	4	180.00	300.00	-9.70	-3.89	-16.64	-16.94	4
180.00	310.00	-7.49	-11.28	-12.40	-18.13	4	180.00	310.00	-8.36	-3.24	-18.86	-15.19	4
180.00	320.00	-8.90	-13.19	-10.76	-22.87	4	180.00	320.00	-7.33	-2.78	-25.52	-15.72	4
180.00	330.00	-10.02	-12.13	-11.13	-28.77	4	180.00	330.00	-6.77	-2.74	-46.15	-15.91	4
180.00	340.00	-10.48	-9.32	-11.23	-22.76	4	180.00	340.00	-6.17	-2.99	-30.47	-15.07	4
180.00	350.00	-10.44	-6.65	-10.73	-19.26	4	180.00	350.00	-5.97	-3.81	-28.50	-14.05	4

5500MHz

Theta Plorization							Phi Plorization						
Angle (θ)	Angle (ψ)	Max Gain(dBi)				N_{ANT}	Angle (θ)	Angle (ψ)	Max Gain(dBi)				N_{ANT}
		Ant 1(G1)	Ant 2(G2)	Ant 3(G3)	Ant 4(G4)				Ant 1(G1)	Ant 2(G2)	Ant 3(G3)	Ant 4(G4)	
0.00	0.00	0.15	-1.32	-11.59	-4.33	4	0.00	0.00	-8.57	1.74	2.06	3.41	4
0.00	10.00	-0.07	-0.45	-15.94	-5.97	4	0.00	10.00	-6.96	1.25	2.24	3.68	4
0.00	20.00	-0.86	0.92	-20.19	-11.17	4	0.00	20.00	-4.27	-0.13	2.17	3.76	4
0.00	30.00	-1.85	2.18	-10.50	-14.29	4	0.00	30.00	-2.68	-2.08	1.84	3.70	4
0.00	40.00	-3.34	2.82	-5.89	-8.72	4	0.00	40.00	-1.15	-4.85	1.42	3.53	4
0.00	50.00	-5.28	3.26	-2.96	-4.68	4	0.00	50.00	-0.35	-8.85	0.83	3.05	4
0.00	60.00	-7.82	3.51	-0.99	-1.96	4	0.00	60.00	0.13	-13.11	-0.22	2.17	4
0.00	70.00	-11.21	3.30	0.42	-0.12	4	0.00	70.00	0.50	-10.28	-2.03	0.86	4
0.00	80.00	-15.04	2.67	1.31	1.13	4	0.00	80.00	0.50	-6.12	-5.12	-1.05	4
0.00	90.00	-12.46	1.78	1.98	1.85	4	0.00	90.00	0.41	-3.13	-9.87	-3.61	4
0.00	100.00	-8.31	0.72	2.29	2.32	4	0.00	100.00	0.20	-0.87	-19.55	-6.91	4
0.00	110.00	-5.37	-0.52	2.29	2.52	4	0.00	110.00	-0.30	0.86	-17.22	-10.72	4
0.00	120.00	-3.27	-2.61	2.15	2.72	4	0.00	120.00	-1.31	1.87	-8.25	-11.84	4
0.00	130.00	-1.87	-5.58	1.72	2.38	4	0.00	130.00	-2.74	2.66	-4.28	-8.74	4
0.00	140.00	-0.86	-9.45	0.91	2.11	4	0.00	140.00	-4.55	3.07	-1.87	-4.98	4
0.00	150.00	-0.04	-12.08	-0.47	1.33	4	0.00	150.00	-6.74	3.21	-0.26	-2.56	4
0.00	160.00	0.40	-8.12	-2.35	0.34	4	0.00	160.00	-8.77	2.87	0.99	-1.00	4
0.00	170.00	0.70	-4.72	-4.71	-1.30	4	0.00	170.00	-10.04	2.44	1.91	-0.20	4
0.00	180.00	0.60	-2.18	-8.25	-3.28	4	0.00	180.00	-9.18	1.89	2.35	0.19	4
0.00	190.00	0.20	-0.35	-15.34	-6.27	4	0.00	190.00	-6.52	0.87	2.48	1.00	4
0.00	200.00	-0.45	0.96	-18.49	-9.96	4	0.00	200.00	-3.94	-0.40	2.70	1.79	4
0.00	210.00	-1.42	2.06	-10.77	-12.70	4	0.00	210.00	-2.05	-2.47	2.65	2.18	4
0.00	220.00	-2.68	2.70	-5.97	-8.61	4	0.00	220.00	-0.95	-5.33	1.99	2.64	4
0.00	230.00	-4.77	3.10	-3.01	-4.82	4	0.00	230.00	-0.23	-9.20	0.79	2.74	4
0.00	240.00	-7.40	3.31	-0.74	-1.80	4	0.00	240.00	0.34	-11.46	-0.50	2.19	4
0.00	250.00	-11.68	3.15	0.67	0.51	4	0.00	250.00	0.66	-8.45	-2.49	1.09	4
0.00	260.00	-18.24	2.85	1.73	2.02	4	0.00	260.00	0.72	-4.59	-5.14	-0.73	4
0.00	270.00	-14.91	2.26	2.24	3.05	4	0.00	270.00	0.68	-1.85	-8.83	-3.46	4
0.00	280.00	-9.13	1.41	2.31	3.66	4	0.00	280.00	0.38	0.18	-14.79	-7.53	4
0.00	290.00	-5.62	0.15	2.23	3.94	4	0.00	290.00	-0.31	1.52	-16.21	-15.04	4
0.00	300.00	-3.14	-1.77	2.11	4.12	4	0.00	300.00	-1.10	2.55	-7.58	-19.72	4
0.00	310.00	-1.55	-4.09	1.45	4.00	4	0.00	310.00	-2.15	3.28	-3.94	-8.11	4
0.00	320.00	-0.39	-7.23	0.44	3.57	4	0.00	320.00	-3.89	3.79	-1.56	-3.68	4
0.00	330.00	0.28	-10.53	-0.74	2.86	4	0.00	330.00	-6.65	4.00	-0.01	-0.63	4
0.00	340.00	0.64	-9.61	-2.27	1.61	4	0.00	340.00	-11.02	3.81	0.95	1.41	4
0.00	350.00	0.68	-5.48	-4.70	-0.06	4	0.00	350.00	-19.42	3.29	1.43	2.78	4
15.00	0.00	0.51	-0.80	-11.48	-6.09	4	15.00	0.00	-7.06	0.69	-0.14	2.22	4
15.00	10.00	0.76	0.37	-21.85	-10.28	4	15.00	10.00	-6.52	-0.22	-0.22	2.58	4
15.00	20.00	0.77	1.30	-19.95	-11.49	4	15.00	20.00	-5.14	-1.78	-0.11	2.71	4
15.00	30.00	0.03	2.07	-11.21	-7.76	4	15.00	30.00	-3.43	-4.04	-0.54	2.17	4
15.00	40.00	-1.50	2.42	-6.92	-4.56	4	15.00	40.00	-1.68	-7.69	-1.20	1.35	4
15.00	50.00	-3.89	2.61	-4.27	-2.01	4	15.00	50.00	-0.67	-14.20	-2.25	0.72	4
15.00	60.00	-7.21	2.70	-2.37	-0.31	4	15.00	60.00	-0.09	-21.36	-3.69	-0.02	4
15.00	70.00	-12.60	2.66	-1.31	0.73	4	15.00	70.00	0.27	-8.02	-5.52	-1.05	4
15.00	80.00	-21.92	2.13	-1.08	1.72	4	15.00	80.00	0.62	-3.27	-8.26	-2.44	4
15.00	90.00	-12.80	1.03	-0.45	1.94	4	15.00	90.00	0.75	-0.80	-15.07	-4.93	4
15.00	100.00	-7.58	-0.38	0.15	1.78	4	15.00	100.00	0.65	0.49	-20.85	-7.75	4
15.00	110.00	-4.99	-2.27	-0.01	1.32	4	15.00	110.00	0.19	1.07	-11.60	-8.61	4
15.00	120.00	-3.32	-4.63	-0.55	0.90	4	15.00	120.00	-0.64	1.11	-7.02	-6.92	4
15.00	130.00	-2.05	-7.02	-1.25	0.33	4	15.00	130.00	-1.70	1.16	-3.88	-4.70	4
15.00	140.00	-1.13	-9.08	-2.60	-0.42	4	15.00	140.00	-2.95	1.22	-2.11	-2.83	4

15.00	150.00	-0.68	-9.66	-4.81	-1.73	4	15.00	150.00	-4.31	1.07	-0.87	-1.36	4
15.00	160.00	-0.70	-8.27	-8.14	-3.29	4	15.00	160.00	-4.79	0.78	-0.11	-0.36	4
15.00	170.00	-1.21	-5.99	-11.63	-5.54	4	15.00	170.00	-4.26	0.08	0.56	0.03	4
15.00	180.00	-2.24	-3.79	-11.49	-9.64	4	15.00	180.00	-3.38	-0.79	1.00	0.12	4
15.00	190.00	-3.83	-2.17	-9.15	-17.28	4	15.00	190.00	-2.60	-2.34	1.19	0.05	4
15.00	200.00	-5.68	-0.85	-5.89	-17.56	4	15.00	200.00	-1.98	-4.78	0.89	0.23	4
15.00	210.00	-6.82	0.10	-2.76	-11.26	4	15.00	210.00	-1.61	-8.64	0.19	0.02	4
15.00	220.00	-6.35	0.54	-0.78	-8.62	4	15.00	220.00	-1.39	-12.07	-0.94	-0.91	4
15.00	230.00	-5.63	0.56	0.64	-6.53	4	15.00	230.00	-1.62	-9.94	-2.25	-2.14	4
15.00	240.00	-4.98	0.37	1.60	-4.95	4	15.00	240.00	-2.17	-6.59	-3.97	-3.20	4
15.00	250.00	-4.32	0.05	2.42	-3.76	4	15.00	250.00	-2.98	-4.28	-6.14	-4.64	4
15.00	260.00	-4.24	-0.30	2.90	-2.30	4	15.00	260.00	-3.06	-2.54	-10.27	-7.07	4
15.00	270.00	-4.58	-0.97	3.28	-1.11	4	15.00	270.00	-2.69	-1.31	-21.49	-11.28	4
15.00	280.00	-4.27	-2.20	3.26	-0.32	4	15.00	280.00	-2.41	-0.24	-12.99	-20.85	4
15.00	290.00	-3.08	-3.42	2.75	0.50	4	15.00	290.00	-2.62	0.76	-7.17	-19.41	4
15.00	300.00	-2.19	-5.02	1.81	1.01	4	15.00	300.00	-3.34	1.41	-4.33	-11.22	4
15.00	310.00	-1.51	-6.39	0.73	1.17	4	15.00	310.00	-4.53	1.88	-2.63	-6.93	4
15.00	320.00	-0.92	-6.58	-0.64	0.94	4	15.00	320.00	-6.09	2.07	-1.39	-3.38	4
15.00	330.00	-0.68	-5.56	-2.30	0.12	4	15.00	330.00	-7.42	1.94	-0.48	-0.76	4
15.00	340.00	-0.23	-4.40	-4.15	-0.98	4	15.00	340.00	-7.96	1.67	0.26	0.71	4
15.00	350.00	-0.05	-3.66	-5.47	-1.86	4	15.00	350.00	-8.28	1.27	0.45	1.45	4
30.00	0.00	0.99	-8.42	-12.91	-12.13	4	30.00	0.00	-5.08	-2.08	0.62	-3.65	4
30.00	10.00	1.23	-8.24	-16.90	-14.03	4	30.00	10.00	-5.25	-2.82	0.47	-3.67	4
30.00	20.00	1.61	-7.75	-16.20	-11.40	4	30.00	20.00	-6.01	-4.23	-0.15	-3.77	4
30.00	30.00	1.83	-6.74	-8.41	-7.11	4	30.00	30.00	-4.64	-5.44	-0.94	-3.92	4
30.00	40.00	1.38	-5.26	-4.75	-4.09	4	30.00	40.00	-2.07	-6.83	-3.09	-4.17	4
30.00	50.00	-0.23	-3.60	-4.06	-2.20	4	30.00	50.00	-0.47	-9.13	-6.02	-4.00	4
30.00	60.00	-3.27	-2.80	-4.32	-0.71	4	30.00	60.00	-0.39	-19.52	-9.31	-3.25	4
30.00	70.00	-8.63	-2.40	-3.21	0.63	4	30.00	70.00	-1.35	-12.69	-8.95	-3.16	4
30.00	80.00	-15.20	-2.35	-1.57	1.69	4	30.00	80.00	-1.37	-6.27	-8.82	-3.64	4
30.00	90.00	-12.86	-2.44	-0.92	2.18	4	30.00	90.00	-0.09	-2.86	-14.38	-5.74	4
30.00	100.00	-9.54	-3.28	-1.87	1.91	4	30.00	100.00	0.22	-1.17	-21.37	-8.90	4
30.00	110.00	-7.74	-5.27	-2.69	0.78	4	30.00	110.00	-0.74	-0.83	-18.59	-11.19	4
30.00	120.00	-5.69	-8.17	-2.78	0.85	4	30.00	120.00	-2.11	-1.55	-15.87	-12.83	4
30.00	130.00	-3.71	-8.85	-4.20	2.04	4	30.00	130.00	-3.43	-3.26	-10.07	-8.90	4
30.00	140.00	-2.59	-9.48	-6.61	1.43	4	30.00	140.00	-5.04	-4.37	-6.65	-4.64	4
30.00	150.00	-2.73	-11.76	-9.53	-0.41	4	30.00	150.00	-8.28	-3.67	-4.04	-2.59	4
30.00	160.00	-3.34	-13.16	-13.36	-2.33	4	30.00	160.00	-12.77	-3.42	-2.75	-2.00	4
30.00	170.00	-4.29	-11.50	-18.97	-4.26	4	30.00	170.00	-13.41	-4.89	-1.73	-2.12	4
30.00	180.00	-5.46	-8.71	-21.46	-6.33	4	30.00	180.00	-10.01	-7.25	-0.99	-2.36	4
30.00	190.00	-7.26	-5.96	-13.88	-9.22	4	30.00	190.00	-8.69	-9.79	-0.70	-2.45	4
30.00	200.00	-8.64	-3.72	-8.85	-14.12	4	30.00	200.00	-7.40	-12.95	-0.44	-1.95	4
30.00	210.00	-9.87	-2.97	-4.87	-18.42	4	30.00	210.00	-5.89	-13.40	-0.09	-2.66	4
30.00	220.00	-11.07	-2.45	-2.47	-16.60	4	30.00	220.00	-3.34	-8.98	-0.81	-5.58	4
30.00	230.00	-12.96	-2.38	-1.30	-13.67	4	30.00	230.00	-1.88	-5.87	-2.72	-7.31	4
30.00	240.00	-11.86	-3.12	-0.57	-11.46	4	30.00	240.00	-1.61	-5.14	-3.59	-6.42	4
30.00	250.00	-8.45	-3.52	-0.19	-9.53	4	30.00	250.00	-1.77	-4.36	-4.93	-8.36	4
30.00	260.00	-5.33	-3.67	0.47	-8.28	4	30.00	260.00	-2.05	-1.90	-7.91	-9.82	4
30.00	270.00	-2.87	-3.51	1.28	-8.86	4	30.00	270.00	-3.50	0.10	-13.86	-9.80	4
30.00	280.00	-1.79	-3.85	2.19	-9.06	4	30.00	280.00	-6.91	1.38	-28.77	-19.81	4
30.00	290.00	-2.22	-4.81	2.83	-10.10	4	30.00	290.00	-10.33	1.71	-11.35	-16.27	4
30.00	300.00	-3.36	-6.69	2.59	-11.93	4	30.00	300.00	-10.59	1.82	-6.66	-12.88	4
30.00	310.00	-3.35	-10.08	1.75	-19.78	4	30.00	310.00	-9.32	2.12	-4.44	-14.02	4
30.00	320.00	-2.16	-15.62	0.89	-14.49	4	30.00	320.00	-8.18	1.99	-2.82	-14.61	4
30.00	330.00	-0.78	-16.23	-0.02	-8.92	4	30.00	330.00	-7.92	1.43	-1.47	-11.34	4
30.00	340.00	0.34	-13.28	-1.55	-7.68	4	30.00	340.00	-7.48	0.51	-0.70	-8.27	4

30.00	350.00	1.03	-12.31	-4.56	-8.83	4	30.00	350.00	-5.67	-0.31	0.24	-6.34	4
45.00	0.00	1.71	-13.59	-10.00	-9.72	4	45.00	0.00	-9.10	-1.85	-0.76	-10.88	4
45.00	10.00	2.66	-10.63	-17.97	-6.28	4	45.00	10.00	-6.12	-3.45	-1.55	-6.95	4
45.00	20.00	3.14	-9.13	-12.00	-5.73	4	45.00	20.00	-3.20	-4.80	-3.99	-2.27	4
45.00	30.00	2.42	-9.55	-8.46	-5.70	4	45.00	30.00	-1.37	-5.90	-8.06	-0.82	4
45.00	40.00	0.44	-10.51	-6.47	-3.79	4	45.00	40.00	-0.47	-6.87	-10.55	-0.13	4
45.00	50.00	-3.06	-10.23	-4.51	-1.59	4	45.00	50.00	0.46	-8.17	-11.03	1.22	4
45.00	60.00	-9.38	-10.40	-4.77	1.42	4	45.00	60.00	0.48	-9.38	-9.37	0.76	4
45.00	70.00	-24.48	-10.26	-4.01	2.03	4	45.00	70.00	-0.64	-9.42	-8.86	-2.99	4
45.00	80.00	-17.01	-13.63	-2.15	1.69	4	45.00	80.00	-0.65	-11.04	-11.51	-6.44	4
45.00	90.00	-10.54	-16.48	-3.55	2.46	4	45.00	90.00	0.12	-6.60	-21.91	-13.71	4
45.00	100.00	-10.77	-13.02	-6.17	0.42	4	45.00	100.00	-1.61	-3.20	-23.84	-19.98	4
45.00	110.00	-8.91	-12.52	-6.53	1.16	4	45.00	110.00	-4.56	-2.42	-23.73	-22.44	4
45.00	120.00	-6.11	-10.30	-6.69	2.48	4	45.00	120.00	-7.67	-4.57	-10.02	-11.27	4
45.00	130.00	-5.02	-7.94	-7.78	1.16	4	45.00	130.00	-12.15	-5.51	-5.66	-7.88	4
45.00	140.00	-5.53	-8.26	-10.19	-0.47	4	45.00	140.00	-16.04	-6.80	-2.76	-4.63	4
45.00	150.00	-7.10	-9.56	-12.19	-2.03	4	45.00	150.00	-22.24	-6.25	-1.38	-2.65	4
45.00	160.00	-8.11	-13.01	-12.74	-4.71	4	45.00	160.00	-21.04	-4.80	-1.16	-2.13	4
45.00	170.00	-6.25	-19.99	-10.75	-8.12	4	45.00	170.00	-23.41	-4.93	-1.59	-1.84	4
45.00	180.00	-4.23	-15.33	-7.54	-10.56	4	45.00	180.00	-17.06	-6.87	-1.66	-0.72	4
45.00	190.00	-3.10	-10.12	-5.48	-12.68	4	45.00	190.00	-8.65	-8.92	-2.15	0.46	4
45.00	200.00	-3.78	-7.45	-3.63	-16.23	4	45.00	200.00	-3.59	-9.47	-2.82	0.22	4
45.00	210.00	-4.75	-6.65	-2.07	-23.94	4	45.00	210.00	-1.01	-8.44	-2.75	-1.32	4
45.00	220.00	-5.23	-6.50	-1.47	-20.40	4	45.00	220.00	0.58	-6.27	-2.66	-2.73	4
45.00	230.00	-6.39	-7.20	-1.42	-13.13	4	45.00	230.00	1.64	-4.45	-3.02	-2.57	4
45.00	240.00	-8.25	-6.56	-0.83	-8.62	4	45.00	240.00	2.24	-3.52	-3.03	-3.62	4
45.00	250.00	-8.44	-6.46	0.46	-5.75	4	45.00	250.00	1.38	-4.21	-4.98	-8.95	4
45.00	260.00	-4.28	-6.48	1.85	-5.24	4	45.00	260.00	-0.89	-4.38	-10.87	-20.27	4
45.00	270.00	-1.69	-8.27	2.94	-5.05	4	45.00	270.00	-3.37	-2.42	-13.45	-18.55	4
45.00	280.00	-2.23	-12.58	3.15	-4.52	4	45.00	280.00	-5.83	-0.48	-18.00	-11.48	4
45.00	290.00	-4.54	-18.52	2.69	-7.10	4	45.00	290.00	-8.25	-0.56	-7.89	-12.16	4
45.00	300.00	-6.44	-14.42	2.17	-11.08	4	45.00	300.00	-8.10	-0.84	-5.64	-13.39	4
45.00	310.00	-5.94	-14.15	1.81	-19.39	4	45.00	310.00	-9.12	-1.27	-5.68	-10.62	4
45.00	320.00	-3.59	-18.85	0.45	-11.78	4	45.00	320.00	-11.31	-1.14	-5.23	-16.73	4
45.00	330.00	-2.05	-24.96	-1.27	-11.01	4	45.00	330.00	-13.55	-1.00	-4.11	-17.07	4
45.00	340.00	-1.24	-23.60	-3.09	-14.71	4	45.00	340.00	-14.27	-0.70	-3.35	-9.40	4
45.00	350.00	-0.68	-20.36	-3.55	-17.34	4	45.00	350.00	-13.54	-0.68	-2.55	-7.63	4
60.00	0.00	-0.42	-22.19	-5.12	-27.82	4	60.00	0.00	-8.22	1.19	-2.78	-4.92	4
60.00	10.00	-0.03	-30.81	-6.97	-25.82	4	60.00	10.00	-7.89	0.37	-2.94	-6.55	4
60.00	20.00	1.20	-34.75	-17.07	-21.31	4	60.00	20.00	-6.22	-1.51	-5.63	-7.21	4
60.00	30.00	1.59	-31.10	-11.06	-12.92	4	60.00	30.00	-3.20	-3.70	-20.05	-1.98	4
60.00	40.00	-0.21	-17.20	-7.55	-5.89	4	60.00	40.00	-1.05	-5.15	-9.55	0.93	4
60.00	50.00	-3.19	-11.05	-8.06	-2.99	4	60.00	50.00	-1.17	-7.43	-6.26	0.12	4
60.00	60.00	-6.89	-8.85	-9.04	-3.26	4	60.00	60.00	-1.37	-10.01	-6.08	-0.84	4
60.00	70.00	-12.81	-10.43	-9.11	-2.03	4	60.00	70.00	-1.12	-17.91	-6.82	-1.17	4
60.00	80.00	-9.14	-15.77	-4.35	0.12	4	60.00	80.00	-0.47	-20.97	-14.50	-4.96	4
60.00	90.00	-7.13	-25.96	-5.70	0.55	4	60.00	90.00	-1.63	-13.22	-22.75	-7.88	4
60.00	100.00	-15.92	-13.00	-8.33	1.86	4	60.00	100.00	-4.94	-11.36	-18.75	-7.66	4
60.00	110.00	-14.99	-8.06	-6.57	1.03	4	60.00	110.00	-8.62	-5.32	-12.62	-5.36	4
60.00	120.00	-9.32	-9.93	-5.40	2.54	4	60.00	120.00	-17.44	-2.30	-6.64	-9.40	4
60.00	130.00	-8.74	-10.28	-7.45	1.02	4	60.00	130.00	-18.83	-3.24	-4.09	-11.82	4
60.00	140.00	-6.74	-15.29	-8.95	0.85	4	60.00	140.00	-10.56	-4.14	-4.13	-6.15	4
60.00	150.00	-5.24	-10.66	-10.68	2.21	4	60.00	150.00	-10.53	-7.08	-3.64	-1.78	4
60.00	160.00	-6.75	-10.39	-14.40	0.64	4	60.00	160.00	-13.62	-5.19	-2.74	-1.75	4
60.00	170.00	-9.72	-14.24	-15.92	-2.43	4	60.00	170.00	-15.16	-3.82	-3.00	-0.60	4
60.00	180.00	-10.72	-14.23	-13.22	-4.14	4	60.00	180.00	-21.87	-7.93	-3.66	0.75	4

60.00	190.00	-10.54	-9.58	-8.86	-4.87	4	60.00	190.00	-12.93	-18.20	-3.41	0.91	4
60.00	200.00	-8.84	-9.60	-4.23	-5.54	4	60.00	200.00	-6.27	-22.23	-3.67	0.37	4
60.00	210.00	-6.29	-10.05	-1.09	-7.47	4	60.00	210.00	-2.71	-10.22	-5.72	0.38	4
60.00	220.00	-3.61	-10.38	0.57	-8.90	4	60.00	220.00	0.07	-6.94	-9.69	0.72	4
60.00	230.00	-2.60	-14.14	0.97	-10.66	4	60.00	230.00	1.56	-5.98	-15.25	-0.21	4
60.00	240.00	-4.34	-26.69	0.99	-11.54	4	60.00	240.00	2.16	-5.11	-10.78	-2.51	4
60.00	250.00	-7.66	-23.47	1.13	-12.73	4	60.00	250.00	2.19	-4.43	-9.96	-3.55	4
60.00	260.00	-7.98	-10.67	1.60	-12.40	4	60.00	260.00	0.77	-6.88	-8.98	-8.41	4
60.00	270.00	-7.50	-7.33	3.26	-15.92	4	60.00	270.00	-1.67	-7.78	-17.22	-14.77	4
60.00	280.00	-5.15	-8.61	2.83	-13.56	4	60.00	280.00	-3.72	-1.64	-18.28	-32.66	4
60.00	290.00	-3.01	-11.81	2.17	-12.37	4	60.00	290.00	-6.28	0.99	-8.44	-13.35	4
60.00	300.00	-3.86	-16.74	1.44	-10.09	4	60.00	300.00	-8.58	2.09	-8.14	-9.88	4
60.00	310.00	-4.98	-18.89	1.05	-8.37	4	60.00	310.00	-16.62	1.79	-11.33	-12.99	4
60.00	320.00	-3.29	-20.18	1.22	-13.81	4	60.00	320.00	-18.43	1.62	-10.43	-8.73	4
60.00	330.00	-3.56	-28.97	-0.71	-28.41	4	60.00	330.00	-8.32	1.88	-6.29	-12.69	4
60.00	340.00	-2.62	-21.24	-2.05	-24.36	4	60.00	340.00	-6.22	2.56	-5.89	-12.66	4
60.00	350.00	-0.46	-20.84	-1.33	-17.16	4	60.00	350.00	-6.96	2.42	-4.91	-6.50	4
75.00	0.00	0.16	-20.13	-5.38	-24.45	4	75.00	0.00	-8.24	0.45	-1.28	-5.71	4
75.00	10.00	-1.23	-28.37	-9.29	-26.42	4	75.00	10.00	-8.75	-0.96	-2.76	-3.46	4
75.00	20.00	0.51	-18.73	-22.29	-14.85	4	75.00	20.00	-8.46	-2.90	-10.73	0.03	4
75.00	30.00	0.78	-12.72	-10.84	-7.43	4	75.00	30.00	-4.89	-4.48	-7.2	0.17	4
75.00	40.00	-2.70	-11.54	-9.73	-5.13	4	75.00	40.00	-2.28	-8.18	-3.37	-2.68	4
75.00	50.00	-3.19	-12.92	-9.38	-3.31	4	75.00	50.00	-0.56	-16.17	-6.6	-4.27	4
75.00	60.00	-1.57	-18.39	-13.57	-0.77	4	75.00	60.00	-0.95	-25.15	-9.21	-5.56	4
75.00	70.00	-6.36	-18.29	-12.06	1.09	4	75.00	70.00	-1.48	-20.46	-12.94	-5.74	4
75.00	80.00	-8.56	-24.32	-12.04	2.17	4	75.00	80.00	-2.91	-11.86	-17.72	-11.13	4
75.00	90.00	-10.3	-15.73	-5.59	1.95	4	75.00	90.00	-4.59	-7.92	-15.48	-5.58	4
75.00	100.00	-17.24	-12.41	-4.93	3.93	4	75.00	100.00	-6.1	-4.90	-10.57	-6.01	4
75.00	110.00	-15.38	-10.02	-5.97	2.13	4	75.00	110.00	-9.46	-4.50	-15.51	-7.34	4
75.00	120.00	-16.52	-10.78	-8.82	2.41	4	75.00	120.00	-9.71	-1.57	-7.87	-17.93	4
75.00	130.00	-12.24	-17.76	-7.52	2.25	4	75.00	130.00	-7.57	-0.80	-4.50	-12.25	4
75.00	140.00	-14.07	-11.82	-6.08	1.99	4	75.00	140.00	-7.88	-3.67	-2.50	-7.28	4
75.00	150.00	-15.49	-11.33	-6.42	-0.77	4	75.00	150.00	-10.23	-3.36	-1.87	-4.83	4
75.00	160.00	-10.48	-17.47	-7.30	-3.35	4	75.00	160.00	-12.55	-2.34	-3.01	-3.09	4
75.00	170.00	-7.79	-12.01	-7.03	-3.25	4	75.00	170.00	-18.98	-5.23	-2.74	-1.92	4
75.00	180.00	-6.82	-9.69	-6.25	-2.62	4	75.00	180.00	-9.06	-10.36	-1.39	-1.15	4
75.00	190.00	-11.53	-9.68	-5.64	-2.14	4	75.00	190.00	-3.23	-9.03	-0.72	-2.17	4
75.00	200.00	-14.45	-10.73	-3.76	-1.89	4	75.00	200.00	-0.92	-3.72	-0.59	-3.74	4
75.00	210.00	-3.32	-15.09	-0.87	-2.33	4	75.00	210.00	0.08	-3.01	-1.13	-3.46	4
75.00	220.00	-0.54	-21.60	0.70	-2.06	4	75.00	220.00	0.07	-2.00	-5.40	-2.79	4
75.00	230.00	-1.78	-15.61	0.92	-2.97	4	75.00	230.00	-0.05	-1.86	-12.52	-3.62	4
75.00	240.00	-5.37	-12.64	0.92	-6.38	4	75.00	240.00	-0.87	-2.55	-9.64	-3.07	4
75.00	250.00	-7.73	-10.54	0.69	-5.40	4	75.00	250.00	-1.55	-4.82	-15.44	-5.37	4
75.00	260.00	-9.71	-10.28	1.19	-6.90	4	75.00	260.00	-0.81	-5.89	-16.46	-6.99	4
75.00	270.00	-9.10	-12.26	1.92	-10.26	4	75.00	270.00	-2.65	-2.84	-19.25	-24.98	4
75.00	280.00	-5.89	-16.74	2.06	-10.89	4	75.00	280.00	-5.00	0.80	-23.19	-18.99	4
75.00	290.00	-4.11	-20.88	1.60	-10.50	4	75.00	290.00	-6.65	2.19	-12.01	-10.03	4
75.00	300.00	-2.84	-28.70	-0.07	-22.81	4	75.00	300.00	-9.02	2.31	-8.92	-9.57	4
75.00	310.00	-2.62	-28.13	-1.08	-14.67	4	75.00	310.00	-9.12	3.24	-11.52	-4.96	4
75.00	320.00	-4.22	-18.69	-1.02	-17.68	4	75.00	320.00	-5.52	3.89	-4.27	-3.20	4
75.00	330.00	-2.97	-14.82	-3.44	-16.14	4	75.00	330.00	-3.96	3.81	-4.23	-7.93	4
75.00	340.00	0.53	-14.64	-3.42	-23.67	4	75.00	340.00	-4.92	3.36	-5.54	-13.40	4
75.00	350.00	1.76	-15.26	-2.43	-17.12	4	75.00	350.00	-6.69	2.84	-5.65	-11.28	4
90.00	0.00	0.12	-21.33	-8.69	-13.98	4	90.00	0.00	-11.86	-1.08	-2.65	-2.94	4
90.00	10.00	-2.71	-18.72	-10.23	-10.92	4	90.00	10.00	-10.72	-1.46	-3.40	-3.94	4
90.00	20.00	-5.65	-14.34	-14.03	-9.69	4	90.00	20.00	-9.09	-2.38	-7.96	-5.15	4

90.00	30.00	-0.61	-9.96	-13.59	-13.86	4	90.00	30.00	-8.92	-3.15	-8.40	-4.43	4
90.00	40.00	0.95	-9.86	-11.46	-9.73	4	90.00	40.00	-10.15	-4.76	-5.36	-6.33	4
90.00	50.00	-1.87	-12.75	-14.89	-6.93	4	90.00	50.00	-5.80	-5.62	-11.62	-6.96	4
90.00	60.00	-1.96	-15.03	-19.35	-4.90	4	90.00	60.00	-5	-6.70	-5.95	-6.78	4
90.00	70.00	-0.89	-11.46	-25.16	-0.85	4	90.00	70.00	-4.78	-12.99	-5.68	-7.06	4
90.00	80.00	-5.53	-8.82	-12.09	-0.08	4	90.00	80.00	-4.48	-8.36	-12.15	-6.11	4
90.00	90.00	-7.01	-13.31	-6.27	1.30	4	90.00	90.00	-4.87	-5.91	-13.4	-18.59	4
90.00	100.00	-5.84	-16.00	-2.64	0.49	4	90.00	100.00	-1.78	-4.30	-15.33	-9.73	4
90.00	110.00	-6.28	-23.19	-3.61	2.51	4	90.00	110.00	-3.12	-2.40	-19.14	-12.90	4
90.00	120.00	-5.63	-12.12	-5.11	-0.45	4	90.00	120.00	-4.41	-0.64	-12.73	-19.63	4
90.00	130.00	-8.07	-11.95	-5.96	0.84	4	90.00	130.00	-6.77	-0.31	-5.71	-19.43	4
90.00	140.00	-9.07	-21.17	-4.66	0.59	4	90.00	140.00	-9.11	-1.22	-2.95	-10.33	4
90.00	150.00	-8.28	-20.45	-5.44	1.12	4	90.00	150.00	-8.88	-1.70	-0.22	-6.45	4
90.00	160.00	-5.89	-27.01	-5.03	1.21	4	90.00	160.00	-10.32	-4.19	-0.56	-4.16	4
90.00	170.00	-5.53	-12.00	-3.77	-0.54	4	90.00	170.00	-18.84	-12.01	-1.72	-4.71	4
90.00	180.00	-5.84	-6.69	-2.60	-2.53	4	90.00	180.00	-24.85	-25.85	-1.55	-5.02	4
90.00	190.00	-7.02	-5.73	-1.61	-3.38	4	90.00	190.00	-12.47	-13.68	-1.69	-4.54	4
90.00	200.00	-7.93	-7.95	-1.10	-2.79	4	90.00	200.00	-4.22	-6.92	-2.44	-4.49	4
90.00	210.00	-5.26	-12.71	-0.54	-2.78	4	90.00	210.00	-1.06	-4.25	-2.53	-4.42	4
90.00	220.00	-2.25	-13.32	-0.10	-2.86	4	90.00	220.00	0.04	-2.82	-3.07	-2.39	4
90.00	230.00	-0.23	-10.08	0.79	-3.26	4	90.00	230.00	-2.40	-2.58	-6.43	-2.28	4
90.00	240.00	-0.32	-6.91	0.36	-3.85	4	90.00	240.00	-5.17	-1.10	-11.71	-2.83	4
90.00	250.00	-0.68	-6.97	-1.11	-2.39	4	90.00	250.00	-5.22	-0.97	-11.02	-6.41	4
90.00	260.00	-1.42	-9.05	-0.71	-2.69	4	90.00	260.00	-4.57	-2.17	-8.66	-7.15	4
90.00	270.00	-3.16	-10.72	1.03	-6.49	4	90.00	270.00	-3.69	-0.75	-11.99	-18.17	4
90.00	280.00	-1.76	-14.71	0.59	-10.84	4	90.00	280.00	-4.61	1.69	-15.02	-25.43	4
90.00	290.00	-1.14	-14.27	-0.52	-15.85	4	90.00	290.00	-4.83	2.73	-12.08	-18.48	4
90.00	300.00	-0.37	-26.58	-2.46	-18.22	4	90.00	300.00	-7.76	2.58	-5.59	-12.98	4
90.00	310.00	1.42	-10.85	-2.78	-23.01	4	90.00	310.00	-7.43	3.37	-6.83	-7.27	4
90.00	320.00	0.97	-7.17	-2.36	-18.10	4	90.00	320.00	-6.08	4.01	-12.71	-8.48	4
90.00	330.00	-2.35	-10.46	-2.72	-14.38	4	90.00	330.00	-7.60	3.46	-9.33	-5.73	4
90.00	340.00	0.61	-15.64	-5.23	-11.81	4	90.00	340.00	-10.87	2.32	-8.30	-12.49	4
90.00	350.00	3.70	-14.63	-7.11	-14.59	4	90.00	350.00	-21.24	0.49	-9.56	-10.08	4
105.00	0.00	-4.77	-15.28	-12.93	-13.99	4	105.00	0.00	-9.71	-0.44	-10.27	-12.77	4
105.00	10.00	-15.30	-17.37	-18.49	-12.50	4	105.00	10.00	-7.05	-1.37	-13.85	-10.92	4
105.00	20.00	-2.65	-14.36	-17.27	-8.38	4	105.00	20.00	-5.99	-1.82	-14.65	-22.81	4
105.00	30.00	0.62	-13.32	-11.76	-7.06	4	105.00	30.00	-5.41	-2.86	-7.36	-8.92	4
105.00	40.00	-0.42	-14.30	-11.76	-7.12	4	105.00	40.00	-3.88	-4.21	-9.32	-6.81	4
105.00	50.00	-2.51	-11.46	-14.07	-6.99	4	105.00	50.00	-3.84	-4.39	-9.20	-23.78	4
105.00	60.00	-2.44	-8.79	-5.26	-2.43	4	105.00	60.00	-7.37	-4.73	-7.52	-10.24	4
105.00	70.00	-6.53	-9.62	-3.73	0.28	4	105.00	70.00	-5.76	-9.86	-13.15	-7.94	4
105.00	80.00	-7.14	-8.33	-2.06	1.35	4	105.00	80.00	-1.18	-4.35	-18.11	-21.61	4
105.00	90.00	-3.8	-8.64	-1.97	2.41	4	105.00	90.00	-2.93	0.09	-25.37	-10.32	4
105.00	100.00	-5.54	-9.38	-3.30	2.70	4	105.00	100.00	-3.52	-1.25	-17.85	-14.16	4
105.00	110.00	-5.52	-12.55	-1.37	2.84	4	105.00	110.00	-3.49	-2.63	-16.11	-12.55	4
105.00	120.00	-7.15	-22.92	-0.22	1.03	4	105.00	120.00	-6.48	-3.65	-8.93	-27.58	4
105.00	130.00	-5.95	-16.26	-0.53	0.86	4	105.00	130.00	-8.58	-3.64	-2.67	-13.01	4
105.00	140.00	-2.75	-10.25	-2.89	-0.33	4	105.00	140.00	-8.84	-1.91	-2.19	-13.95	4
105.00	150.00	-0.85	-10.69	-4.23	0.42	4	105.00	150.00	-10.55	-3.78	-2.65	-13.80	4
105.00	160.00	-0.80	-14.62	-3.69	-0.27	4	105.00	160.00	-17.86	-12.26	-2.78	-12.54	4
105.00	170.00	-3.64	-8.07	-3.66	-1.54	4	105.00	170.00	-18.13	-12.35	-3.31	-9.21	4
105.00	180.00	-11.18	-4.92	-3.22	-2.06	4	105.00	180.00	-15.96	-6.38	-6.17	-6.80	4
105.00	190.00	-16.07	-4.67	-2.41	-1.99	4	105.00	190.00	-8.80	-4.07	-12.05	-4.89	4
105.00	200.00	-5.27	-8.33	-2.01	-1.90	4	105.00	200.00	-4.43	-6.16	-10.54	-2.70	4
105.00	210.00	-2.14	-12.14	-2.30	-1.63	4	105.00	210.00	-2.84	-5.61	-6.54	-2.17	4
105.00	220.00	-1.56	-8.78	-0.88	-1.31	4	105.00	220.00	-2.84	-2.27	-7.28	-3.35	4

105.00	230.00	-1.88	-6.73	1.53	-1.84	4	105.00	230.00	-3.95	-0.42	-6.26	-5.58	4
105.00	240.00	-1.73	-6.72	1.70	-1.33	4	105.00	240.00	-5.02	-0.50	-6.24	-7.77	4
105.00	250.00	-2.25	-16.67	0.06	-1.04	4	105.00	250.00	-5.36	0.52	-11.53	-10.63	4
105.00	260.00	-3.51	-16.23	-2.91	-3.71	4	105.00	260.00	-4.87	2.16	-9.69	-13.68	4
105.00	270.00	-1.93	-14.88	-3.17	-6.06	4	105.00	270.00	-5.65	3.09	-13.14	-13.08	4
105.00	280.00	-2.19	-23.35	-0.12	-4.12	4	105.00	280.00	-5.15	3.00	-9.43	-25.59	4
105.00	290.00	-3.26	-11.94	2.15	-7.15	4	105.00	290.00	-4.66	2.14	-9.57	-18.11	4
105.00	300.00	-1.66	-26.94	0.06	-14.40	4	105.00	300.00	-4.74	3.18	-7.52	-13.55	4
105.00	310.00	-1.23	-8.72	-2.89	-21.39	4	105.00	310.00	-7.13	4.13	-11.21	-15.01	4
105.00	320.00	-3.02	-7.34	-3.62	-10.70	4	105.00	320.00	-10.20	2.83	-13.45	-25.42	4
105.00	330.00	0.00	-14.64	-2.76	-24.00	4	105.00	330.00	-10.51	-0.02	-14.32	-17.52	4
105.00	340.00	2.52	-15.54	-4.80	-12.90	4	105.00	340.00	-9.33	-1.11	-21.12	-16.65	4
105.00	350.00	2.62	-15.22	-5.95	-13.95	4	105.00	350.00	-9.50	-1.27	-22.13	-16.94	4
120.00	0.00	-5.70	-12.71	-12.28	-11.82	4	120.00	0.00	-7.45	-1.98	-15.97	-6.55	4
120.00	10.00	-10.95	-11.09	-10.49	-10.35	4	120.00	10.00	-5.63	-1.76	-13.58	-6.41	4
120.00	20.00	-7.57	-10.00	-9.89	-7.94	4	120.00	20.00	-3.65	-2.13	-15.92	-6.12	4
120.00	30.00	-1.47	-6.03	-14.77	-7.40	4	120.00	30.00	-2.72	-2.95	-19.38	-4.18	4
120.00	40.00	-0.88	-4.11	-7.07	-7.91	4	120.00	40.00	-2.02	-3.80	-12.16	-3.63	4
120.00	50.00	-4.41	-5.16	-3.94	-9.32	4	120.00	50.00	-1.19	-5.92	-7.89	-7.61	4
120.00	60.00	-11.30	-6.33	-6.11	-5.45	4	120.00	60.00	-0.91	-5.77	-5.75	-22.80	4
120.00	70.00	-7.88	-5.55	-4.55	-2.07	4	120.00	70.00	-1.89	-5.26	-8.81	-14.14	4
120.00	80.00	-7.73	-4.99	-2.60	-1.34	4	120.00	80.00	-3.02	-9.36	-13.33	-22.23	4
120.00	90.00	-7.79	-6.51	-1.00	-0.80	4	120.00	90.00	-1.00	-6.91	-15.89	-19.57	4
120.00	100.00	-6.23	-6.81	0.41	-0.34	4	120.00	100.00	-1.62	-3.05	-16.49	-13.52	4
120.00	110.00	-5.01	-10.74	0.60	-0.43	4	120.00	110.00	-3.06	-0.70	-15.18	-19.44	4
120.00	120.00	-4.65	-8.10	-0.73	0.03	4	120.00	120.00	-6.21	0.09	-14.13	-21.63	4
120.00	130.00	-3.81	-7.97	-2.36	-1.57	4	120.00	130.00	-6.75	-4.07	-11.32	-20.30	4
120.00	140.00	-2.16	-25.98	-1.82	-1.68	4	120.00	140.00	-8.85	-4.92	-1.09	-16.17	4
120.00	150.00	-0.96	-12.74	-2.90	-2.78	4	120.00	150.00	-18.34	-1.71	-0.20	-14.72	4
120.00	160.00	-0.53	-11.65	-2.56	-7.48	4	120.00	160.00	-13.50	-2.78	-1.12	-16.87	4
120.00	170.00	-1.02	-13.58	-2.92	-7.53	4	120.00	170.00	-7.49	-6.53	-2.29	-15.98	4
120.00	180.00	-2.10	-13.83	-3.95	-4.57	4	120.00	180.00	-5.20	-7.52	-4.18	-11.39	4
120.00	190.00	-4.62	-24.73	-4.71	-3.72	4	120.00	190.00	-7.18	-5.70	-7.00	-8.74	4
120.00	200.00	-9.13	-18.44	-4.78	-3.56	4	120.00	200.00	-14.97	-6.46	-12.47	-7.87	4
120.00	210.00	-7.25	-23.86	-4.18	-3.89	4	120.00	210.00	-10.74	-13.32	-24.04	-7.17	4
120.00	220.00	-4.35	-11.28	-3.21	-4.11	4	120.00	220.00	-5.21	-13.77	-7.50	-8.13	4
120.00	230.00	-4.11	-8.54	-1.91	-3.26	4	120.00	230.00	-4.42	-7.49	-4.45	-9.35	4
120.00	240.00	-4.56	-16.14	-0.09	-1.10	4	120.00	240.00	-6.43	-3.46	-8.71	-10.45	4
120.00	250.00	-4.37	-10.64	1.21	-0.02	4	120.00	250.00	-10.42	-0.71	-18.35	-10.89	4
120.00	260.00	-4.19	-6.43	0.63	-1.37	4	120.00	260.00	-7.57	0.97	-9.17	-8.68	4
120.00	270.00	-2.99	-7.80	-0.88	-2.74	4	120.00	270.00	-7.06	1.77	-4.47	-10.14	4
120.00	280.00	-1.30	-9.53	-1.28	-5.64	4	120.00	280.00	-10.77	2.20	-9.83	-31.61	4
120.00	290.00	-1.33	-11.74	-0.30	-8.31	4	120.00	290.00	-12.05	1.64	-22.52	-15.06	4
120.00	300.00	-1.79	-9.97	-0.93	-8.52	4	120.00	300.00	-11.80	1.56	-14.55	-21.17	4
120.00	310.00	-3.48	-6.47	-2.56	-6.39	4	120.00	310.00	-11.08	2.09	-7.27	-21.56	4
120.00	320.00	-7.76	-7.59	-4.66	-5.12	4	120.00	320.00	-8.42	2.13	-4.27	-16.65	4
120.00	330.00	-11.37	-16.70	-6.51	-6.48	4	120.00	330.00	-10.76	1.02	-4.75	-16.65	4
120.00	340.00	-3.35	-10.76	-8.46	-11.22	4	120.00	340.00	-12.65	0.15	-7.83	-12.51	4
120.00	350.00	-0.31	-10.57	-26.21	-13.36	4	120.00	350.00	-10.82	-1.19	-14.07	-8.22	4
135.00	0.00	-15.27	-5.51	-3.47	-10.54	4	135.00	0.00	-8.69	-0.61	-7.49	-8.77	4
135.00	10.00	-6.33	-9.15	-5.40	-9.55	4	135.00	10.00	-6.10	-2.86	-7.79	-8.98	4
135.00	20.00	-3.01	-7.28	-12.72	-8.63	4	135.00	20.00	-6.00	-6.04	-7.68	-10.06	4
135.00	30.00	-2.63	-3.13	-15.61	-8.10	4	135.00	30.00	-7.98	-7.53	-7.75	-11.09	4
135.00	40.00	-7.24	-2.76	-6.77	-7.95	4	135.00	40.00	-7.62	-7.89	-10.02	-11.84	4
135.00	50.00	-10.28	-4.52	-5.20	-9.30	4	135.00	50.00	-4.46	-6.43	-12.97	-11.69	4
135.00	60.00	-8.05	-6.49	-4.55	-11.55	4	135.00	60.00	-2.75	-7.03	-16.67	-11.12	4

135.00	70.00	-12.28	-6.10	-3.04	-6.80	4	135.00	70.00	-4.51	-9.24	-16.53	-16.00	4
135.00	80.00	-15.02	-6.78	-2.76	-3.61	4	135.00	80.00	-7.21	-20.34	-10.47	-18.97	4
135.00	90.00	-12.95	-10.15	-1.69	-5.10	4	135.00	90.00	-3.43	-11.92	-13.17	-14.98	4
135.00	100.00	-5.71	-4.21	-0.67	-4.90	4	135.00	100.00	-1.89	-6.87	-13.04	-18.73	4
135.00	110.00	-5.03	-2.49	-2.53	-3.69	4	135.00	110.00	-5.16	-5.13	-8.57	-10.10	4
135.00	120.00	-6.40	-6.79	-4.86	-3.15	4	135.00	120.00	-12.27	-3.86	-6.34	-10.70	4
135.00	130.00	-5.27	-10.67	-5.28	-4.40	4	135.00	130.00	-17.10	-4.05	-5.68	-19.72	4
135.00	140.00	-2.71	-7.23	-4.84	-4.83	4	135.00	140.00	-17.60	-5.06	-5.68	-9.49	4
135.00	150.00	-0.84	-12.16	-4.85	-4.51	4	135.00	150.00	-12.49	-7.91	-5.47	-6.45	4
135.00	160.00	-0.35	-14.36	-5.99	-5.78	4	135.00	160.00	-8.17	-7.13	-5.04	-5.81	4
135.00	170.00	-1.62	-6.47	-7.29	-6.97	4	135.00	170.00	-5.74	-5.73	-5.59	-6.04	4
135.00	180.00	-3.89	-4.24	-9.59	-6.52	4	135.00	180.00	-5.50	-5.00	-7.20	-6.59	4
135.00	190.00	-7.57	-3.69	-11.73	-5.65	4	135.00	190.00	-8.07	-5.17	-11.10	-6.71	4
135.00	200.00	-10.11	-4.12	-11.03	-3.96	4	135.00	200.00	-16.38	-5.05	-25.45	-6.59	4
135.00	210.00	-7.67	-4.43	-7.62	-1.76	4	135.00	210.00	-17.10	-6.51	-12.83	-6.47	4
135.00	220.00	-6.53	-2.57	-5.54	-0.54	4	135.00	220.00	-8.89	-8.10	-7.94	-7.22	4
135.00	230.00	-9.23	-2.11	-4.04	-0.55	4	135.00	230.00	-7.57	-7.21	-7.39	-7.76	4
135.00	240.00	-19.18	-3.59	-2.15	-1.80	4	135.00	240.00	-12.33	-4.25	-10.24	-7.25	4
135.00	250.00	-28.43	-5.50	-0.88	-1.46	4	135.00	250.00	-11.31	-2.47	-15.70	-5.37	4
135.00	260.00	-19.85	-7.16	-2.23	-0.51	4	135.00	260.00	-13.62	-2.88	-10.25	-5.73	4
135.00	270.00	-11.06	-15.79	-4.49	-1.83	4	135.00	270.00	-10.69	-3.68	-5.94	-13.02	4
135.00	280.00	-11.76	-18.22	-4.55	-5.06	4	135.00	280.00	-7.91	-0.46	-6.54	-21.09	4
135.00	290.00	-11.49	-12.24	-2.75	-5.45	4	135.00	290.00	-11.33	1.34	-10.93	-21.68	4
135.00	300.00	-10.35	-11.91	-2.74	-4.16	4	135.00	300.00	-14.92	1.22	-13.73	-13.03	4
135.00	310.00	-12.33	-11.15	-6.36	-3.22	4	135.00	310.00	-9.01	-0.56	-4.86	-11.37	4
135.00	320.00	-13.41	-11.77	-7.82	-4.08	4	135.00	320.00	-7.51	-1.23	-4.94	-14.87	4
135.00	330.00	-11.18	-12.84	-7.47	-6.47	4	135.00	330.00	-11.27	-1.29	-8.07	-12.56	4
135.00	340.00	-9.05	-18.21	-7.91	-8.26	4	135.00	340.00	-23.10	-2.11	-10.41	-9.96	4
135.00	350.00	-9.53	-30.43	-8.20	-8.67	4	135.00	350.00	-28.88	-2.29	-10.58	-9.29	4
150.00	0.00	-12.28	-12.55	-13.54	-6.98	4	150.00	0.00	-6.12	-7.36	-9.34	-6.52	4
150.00	10.00	-13.76	-13.66	-15.90	-7.57	4	150.00	10.00	-4.60	-8.45	-9.02	-5.90	4
150.00	20.00	-14.39	-8.69	-19.16	-8.81	4	150.00	20.00	-2.26	-9.45	-7.59	-4.94	4
150.00	30.00	-9.34	-4.12	-17.91	-12.25	4	150.00	30.00	-1.01	-9.35	-6.48	-5.38	4
150.00	40.00	-4.77	-2.27	-13.86	-17.52	4	150.00	40.00	-1.85	-8.92	-6.23	-7.24	4
150.00	50.00	-2.99	-1.86	-14.10	-18.76	4	150.00	50.00	-6.05	-8.39	-5.37	-10.10	4
150.00	60.00	-3.64	-1.81	-13.92	-11.82	4	150.00	60.00	-11.14	-9.06	-5.19	-14.73	4
150.00	70.00	-6.74	-2.25	-10.07	-8.34	4	150.00	70.00	-5.35	-10.47	-5.80	-20.84	4
150.00	80.00	-7.78	-4.71	-5.99	-6.74	4	150.00	80.00	-1.94	-6.07	-7.09	-50.09	4
150.00	90.00	-4.89	-9.23	-3.19	-5.78	4	150.00	90.00	-2.18	-3.53	-9.85	-21.30	4
150.00	100.00	-4.36	-10.69	-2.52	-5.56	4	150.00	100.00	-4.44	-3.54	-14.63	-19.08	4
150.00	110.00	-5.38	-11.63	-2.37	-5.98	4	150.00	110.00	-6.36	-5.53	-18.18	-19.15	4
150.00	120.00	-6.59	-17.82	-2.07	-6.16	4	150.00	120.00	-6.78	-6.00	-16.65	-13.39	4
150.00	130.00	-6.39	-13.26	-2.59	-5.17	4	150.00	130.00	-6.18	-4.31	-12.04	-15.39	4
150.00	140.00	-4.92	-6.25	-3.39	-5.64	4	150.00	140.00	-6.37	-3.23	-8.50	-13.19	4
150.00	150.00	-3.10	-4.32	-9.69	-7.34	4	150.00	150.00	-7.25	-2.11	-9.40	-11.18	4
150.00	160.00	-2.28	-5.62	-10.01	-7.62	4	150.00	160.00	-7.37	-1.55	-12.39	-10.55	4
150.00	170.00	-2.11	-7.56	-9.62	-6.27	4	150.00	170.00	-5.28	-2.21	-14.06	-9.25	4
150.00	180.00	-2.95	-5.93	-10.31	-4.27	4	150.00	180.00	-2.70	-4.07	-14.62	-9.04	4
150.00	190.00	-5.67	-3.33	-10.32	-3.30	4	150.00	190.00	-2.06	-5.89	-15.49	-10.13	4
150.00	200.00	-10.49	-2.44	-10.17	-2.96	4	150.00	200.00	-3.53	-7.52	-16.87	-12.89	4
150.00	210.00	-11.48	-2.97	-8.40	-3.02	4	150.00	210.00	-6.08	-9.88	-14.87	-20.98	4
150.00	220.00	-5.74	-4.50	-6.58	-3.73	4	150.00	220.00	-6.57	-13.08	-10.67	-15.13	4
150.00	230.00	-3.23	-6.61	-5.66	-3.67	4	150.00	230.00	-4.75	-10.58	-9.29	-7.74	4
150.00	240.00	-3.75	-6.65	-4.65	-2.62	4	150.00	240.00	-3.52	-7.31	-10.92	-5.51	4
150.00	250.00	-7.77	-6.93	-3.45	-2.39	4	150.00	250.00	-3.05	-5.19	-15.36	-5.45	4
150.00	260.00	-18.42	-9.87	-2.97	-2.82	4	150.00	260.00	-3.89	-3.56	-18.41	-6.72	4

150.00	270.00	-16.25	-16.58	-2.64	-4.56	4	150.00	270.00	-7.12	-3.01	-10.85	-11.67	4
150.00	280.00	-10.47	-23.76	-2.62	-5.41	4	150.00	280.00	-10.93	-1.85	-7.81	-19.98	4
150.00	290.00	-8.72	-15.27	-4.17	-5.62	4	150.00	290.00	-9.77	0.45	-6.81	-13.33	4
150.00	300.00	-7.77	-10.39	-6.60	-6.08	4	150.00	300.00	-7.33	2.44	-6.95	-12.21	4
150.00	310.00	-9.41	-7.73	-8.20	-5.94	4	150.00	310.00	-3.21	2.76	-8.04	-17.51	4
150.00	320.00	-17.10	-6.77	-7.52	-5.31	4	150.00	320.00	-1.24	1.82	-15.42	-14.57	4
150.00	330.00	-19.49	-6.56	-6.83	-4.41	4	150.00	330.00	-1.98	-0.32	-16.78	-9.62	4
150.00	340.00	-15.98	-6.92	-6.91	-4.32	4	150.00	340.00	-5.30	-3.27	-10.36	-8.57	4
150.00	350.00	-13.22	-7.03	-8.09	-5.18	4	150.00	350.00	-9.19	-4.78	-9.10	-8.15	4
165.00	0.00	-3.25	-1.84	-16.10	-11.94	4	165.00	0.00	-5.77	-2.35	-14.24	-12.46	4
165.00	10.00	-4.14	-2.29	-12.34	-14.32	4	165.00	10.00	-3.42	-3.36	-12.67	-11.85	4
165.00	20.00	-6.66	-2.74	-9.46	-19.97	4	165.00	20.00	-2.21	-4.30	-12.10	-11.67	4
165.00	30.00	-10.32	-2.31	-8.86	-23.60	4	165.00	30.00	-1.60	-5.01	-12.11	-12.13	4
165.00	40.00	-11.23	-2.24	-8.31	-18.75	4	165.00	40.00	-1.47	-7.01	-12.73	-11.97	4
165.00	50.00	-7.69	-2.32	-7.55	-15.15	4	165.00	50.00	-1.64	-9.40	-13.46	-11.47	4
165.00	60.00	-5.20	-3.73	-7.60	-12.61	4	165.00	60.00	-2.24	-10.18	-14.39	-11.19	4
165.00	70.00	-4.61	-5.90	-7.39	-10.66	4	165.00	70.00	-2.65	-8.96	-15.23	-11.88	4
165.00	80.00	-4.43	-6.04	-7.41	-9.48	4	165.00	80.00	-2.49	-8.16	-16.40	-16.80	4
165.00	90.00	-4.11	-5.17	-2.25	-8.23	4	165.00	90.00	-2.21	-9.21	-12.42	-19.75	4
165.00	100.00	-3.16	-4.07	-3.06	-7.07	4	165.00	100.00	-2.36	-14.14	-22.71	-17.77	4
165.00	110.00	-1.97	-4.37	-3.98	-6.88	4	165.00	110.00	-3.20	-18.23	-26.48	-22.71	4
165.00	120.00	-1.22	-5.54	-5.38	-7.84	4	165.00	120.00	-4.72	-11.45	-20.69	-24.60	4
165.00	130.00	-0.82	-8.49	-6.63	-9.67	4	165.00	130.00	-5.65	-7.68	-18.90	-21.80	4
165.00	140.00	-0.72	-15.39	-7.42	-11.16	4	165.00	140.00	-5.12	-5.91	-18.16	-15.51	4
165.00	150.00	-1.22	-28.47	-7.74	-12.32	4	165.00	150.00	-3.49	-5.68	-18.93	-13.28	4
165.00	160.00	-2.76	-15.19	-7.52	-11.89	4	165.00	160.00	-2.20	-6.78	-17.59	-12.56	4
165.00	170.00	-6.37	-10.48	-7.67	-10.31	4	165.00	170.00	-1.37	-8.72	-14.97	-12.68	4
165.00	180.00	-13.57	-8.04	-7.53	-8.73	4	165.00	180.00	-1.65	-11.67	-11.95	-13.86	4
165.00	190.00	-16.84	-6.77	-6.92	-7.04	4	165.00	190.00	-2.90	-15.47	-9.01	-16.38	4
165.00	200.00	-7.94	-5.88	-7.06	-6.43	4	165.00	200.00	-4.91	-22.13	-7.15	-21.64	4
165.00	210.00	-4.25	-5.81	-8.25	-6.26	4	165.00	210.00	-7.32	-31.75	-7.57	-32.89	4
165.00	220.00	-3.08	-5.68	-9.37	-6.62	4	165.00	220.00	-7.92	-18.61	-9.23	-27.40	4
165.00	230.00	-3.10	-6.05	-9.27	-6.73	4	165.00	230.00	-6.71	-12.73	-10.77	-22.76	4
165.00	240.00	-4.27	-6.69	-7.90	-7.51	4	165.00	240.00	-5.42	-9.34	-12.61	-17.81	4
165.00	250.00	-7.01	-7.65	-6.99	-8.64	4	165.00	250.00	-4.68	-6.97	-13.15	-16.30	4
165.00	260.00	-11.68	-7.79	-6.67	-10.79	4	165.00	260.00	-4.72	-4.94	-9.66	-15.92	4
165.00	270.00	-17.77	-8.29	-7.10	-14.03	4	165.00	270.00	-5.32	-3.21	-7.19	-16.06	4
165.00	280.00	-16.40	-9.26	-8.75	-17.99	4	165.00	280.00	-7.13	-1.45	-6.69	-16.02	4
165.00	290.00	-15.51	-12.01	-11.27	-18.88	4	165.00	290.00	-9.69	0.52	-8.38	-14.75	4
165.00	300.00	-18.89	-22.82	-14.04	-20.04	4	165.00	300.00	-11.70	2.18	-10.67	-14.91	4
165.00	310.00	-20.06	-15.03	-19.32	-17.66	4	165.00	310.00	-10.30	3.17	-10.32	-15.46	4
165.00	320.00	-12.21	-7.25	-25.90	-14.99	4	165.00	320.00	-9.21	3.41	-9.57	-17.01	4
165.00	330.00	-7.94	-3.80	-19.66	-12.99	4	165.00	330.00	-9.54	2.83	-10.61	-18.86	4
165.00	340.00	-6.05	-2.21	-18.19	-11.45	4	165.00	340.00	-10.84	1.80	-13.43	-20.22	4
165.00	350.00	-5.20	-1.88	-18.64	-11.72	4	165.00	350.00	-11.38	1.04	-15.73	-19.48	4
180.00	0.00	-12.36	-3.89	-9.43	-18.81	4	180.00	0.00	-7.99	-9.28	-22.41	-16.91	4
180.00	10.00	-11.89	-3.40	-8.75	-19.35	4	180.00	10.00	-8.20	-10.06	-20.34	-16.41	4
180.00	20.00	-11.12	-3.11	-9.25	-20.54	4	180.00	20.00	-8.27	-13.28	-16.47	-16.08	4
180.00	30.00	-10.49	-2.83	-9.58	-20.81	4	180.00	30.00	-8.97	-17.80	-14.04	-15.82	4
180.00	40.00	-9.86	-2.60	-9.90	-19.22	4	180.00	40.00	-9.67	-21.40	-12.89	-16.79	4
180.00	50.00	-9.21	-2.44	-10.84	-18.37	4	180.00	50.00	-10.94	-16.49	-12.28	-19.69	4
180.00	60.00	-8.74	-2.42	-12.71	-17.56	4	180.00	60.00	-11.88	-12.19	-12.04	-23.54	4
180.00	70.00	-8.40	-2.60	-15.02	-16.92	4	180.00	70.00	-11.88	-9.76	-10.61	-26.64	4
180.00	80.00	-7.93	-3.11	-18.34	-16.49	4	180.00	80.00	-12.04	-7.53	-9.45	-25.34	4
180.00	90.00	-7.75	-3.94	-23.68	-18.61	4	180.00	90.00	-11.93	-5.48	-9.19	-22.44	4
180.00	100.00	-7.76	-5.49	-22.39	-20.78	4	180.00	100.00	-12.40	-4.31	-9.77	-22.19	4

180.00	110.00	-8.14	-8.61	-20.15	-20.60	4	180.00	110.00	-12.57	-3.91	-10.76	-21.68	4
180.00	120.00	-8.30	-13.55	-17.58	-18.25	4	180.00	120.00	-12.20	-3.99	-11.52	-24.16	4
180.00	130.00	-9.20	-24.71	-15.60	-14.31	4	180.00	130.00	-11.01	-4.32	-12.48	-25.23	4
180.00	140.00	-10.41	-23.27	-14.17	-12.55	4	180.00	140.00	-10.22	-4.89	-16.04	-24.44	4
180.00	150.00	-11.87	-14.25	-12.48	-11.54	4	180.00	150.00	-9.29	-5.64	-13.90	-23.32	4
180.00	160.00	-14.89	-10.73	-13.02	-11.22	4	180.00	160.00	-8.71	-6.74	-12.77	-21.96	4
180.00	170.00	-21.37	-9.28	-13.90	-11.72	4	180.00	170.00	-7.99	-7.93	-11.28	-18.60	4
180.00	180.00	-28.65	-7.95	-17.71	-11.91	4	180.00	180.00	-7.78	-9.76	-10.84	-16.66	4
180.00	190.00	-19.23	-7.32	-21.34	-14.06	4	180.00	190.00	-8.07	-11.64	-10.61	-15.16	4
180.00	200.00	-13.24	-6.64	-26.98	-16.16	4	180.00	200.00	-8.85	-13.83	-9.47	-13.33	4
180.00	210.00	-10.29	-6.00	-20.45	-19.51	4	180.00	210.00	-9.67	-16.51	-9.47	-12.60	4
180.00	220.00	-8.39	-5.66	-15.32	-23.24	4	180.00	220.00	-11.62	-23.77	-10.41	-12.86	4
180.00	230.00	-7.71	-5.04	-11.14	-22.54	4	180.00	230.00	-14.79	-47.54	-10.47	-12.48	4
180.00	240.00	-7.25	-4.53	-9.43	-20.49	4	180.00	240.00	-22.43	-21.63	-11.59	-12.80	4
180.00	250.00	-6.82	-4.19	-7.41	-19.09	4	180.00	250.00	-36.75	-14.79	-12.81	-12.71	4
180.00	260.00	-6.91	-4.60	-6.70	-17.39	4	180.00	260.00	-21.48	-10.98	-14.97	-14.12	4
180.00	270.00	-7.38	-5.48	-7.51	-17.22	4	180.00	270.00	-14.95	-8.17	-16.94	-15.45	4
180.00	280.00	-7.42	-6.99	-8.42	-17.67	4	180.00	280.00	-11.67	-6.18	-15.27	-17.17	4
180.00	290.00	-8.55	-9.15	-9.67	-19.37	4	180.00	290.00	-9.43	-4.69	-13.61	-19.20	4
180.00	300.00	-10.08	-12.32	-11.80	-18.42	4	180.00	300.00	-8.13	-3.82	-11.75	-25.42	4
180.00	310.00	-12.66	-16.84	-12.34	-17.75	4	180.00	310.00	-7.28	-3.35	-12.99	-31.09	4
180.00	320.00	-16.38	-20.60	-10.36	-18.38	4	180.00	320.00	-7.09	-3.19	-16.27	-29.19	4
180.00	330.00	-21.57	-16.32	-9.16	-19.17	4	180.00	330.00	-6.96	-3.28	-21.57	-28.68	4
180.00	340.00	-20.14	-10.89	-9.05	-19.97	4	180.00	340.00	-6.96	-3.79	-28.28	-25.15	4
180.00	350.00	-15.19	-6.71	-8.91	-20.06	4	180.00	350.00	-7.17	-4.92	-34.64	-20.38	4

5580MHz

Theta Plorization							Phi Plorization						
Angle (θ)	Angle (ψ)	Max Gain(dBi)				N_{ANT}	Angle (θ)	Angle (ψ)	Max Gain(dBi)				N_{ANT}
		Ant 1(G1)	Ant 2(G2)	Ant 3(G3)	Ant 4(G4)				Ant 1(G1)	Ant 2(G2)	Ant 3(G3)	Ant 4(G4)	
0.00	0.00	0.14	-1.62	-12.33	-5.01	4	0.00	0.00	-6.81	1.87	2.15	3.18	4
0.00	10.00	-0.12	-0.90	-16.22	-6.57	4	0.00	10.00	-5.43	1.36	2.37	3.44	4
0.00	20.00	-0.98	0.44	-16.93	-11.13	4	0.00	20.00	-3.36	0.06	2.39	3.82	4
0.00	30.00	-2.18	1.53	-9.44	-11.68	4	0.00	30.00	-1.86	-1.85	2.12	3.85	4
0.00	40.00	-4.05	2.27	-5.34	-7.49	4	0.00	40.00	-0.67	-4.20	1.72	3.53	4
0.00	50.00	-6.56	2.76	-2.60	-4.06	4	0.00	50.00	0.07	-7.82	0.91	2.71	4
0.00	60.00	-10.06	2.89	-0.92	-1.59	4	0.00	60.00	0.62	-12.32	-0.66	1.59	4
0.00	70.00	-15.74	2.86	0.33	0.05	4	0.00	70.00	1.03	-10.15	-2.91	0.03	4
0.00	80.00	-16.38	2.60	1.23	1.20	4	0.00	80.00	1.04	-5.20	-5.70	-1.90	4
0.00	90.00	-10.97	1.75	1.93	1.92	4	0.00	90.00	0.90	-2.49	-9.65	-4.63	4
0.00	100.00	-7.22	0.67	2.19	2.40	4	0.00	100.00	0.25	-0.84	-20.03	-8.60	4
0.00	110.00	-4.47	-0.77	2.16	2.53	4	0.00	110.00	-0.50	0.24	-15.64	-12.15	4
0.00	120.00	-2.74	-2.48	1.89	2.48	4	0.00	120.00	-1.60	1.25	-7.92	-10.15	4
0.00	130.00	-1.32	-4.84	1.32	2.01	4	0.00	130.00	-3.14	2.00	-4.58	-6.68	4
0.00	140.00	-0.29	-8.03	0.47	1.56	4	0.00	140.00	-5.00	2.37	-2.05	-3.94	4
0.00	150.00	0.22	-10.71	-0.86	0.68	4	0.00	150.00	-7.55	2.71	-0.22	-2.11	4
0.00	160.00	0.66	-9.18	-2.62	-0.70	4	0.00	160.00	-12.02	2.66	1.00	-0.93	4
0.00	170.00	0.58	-6.03	-4.80	-2.54	4	0.00	170.00	-13.53	2.29	1.67	0.23	4
0.00	180.00	0.30	-3.03	-8.19	-4.24	4	0.00	180.00	-9.39	1.73	1.90	1.20	4
0.00	190.00	-0.10	-1.08	-13.38	-6.79	4	0.00	190.00	-6.22	0.84	2.24	1.28	4
0.00	200.00	-1.01	0.75	-17.60	-9.61	4	0.00	200.00	-4.14	-0.21	2.64	1.70	4
0.00	210.00	-2.16	1.90	-9.63	-10.36	4	0.00	210.00	-2.45	-2.16	2.47	2.28	4
0.00	220.00	-3.74	2.71	-5.01	-7.00	4	0.00	220.00	-1.12	-4.85	2.07	2.43	4
0.00	230.00	-5.70	3.11	-2.27	-4.02	4	0.00	230.00	-0.20	-8.32	1.14	2.15	4
0.00	240.00	-9.04	3.31	-0.43	-1.52	4	0.00	240.00	0.40	-10.06	-0.17	1.36	4
0.00	250.00	-13.87	3.19	0.84	0.55	4	0.00	250.00	0.75	-7.84	-1.99	0.29	4
0.00	260.00	-15.86	2.83	1.60	2.02	4	0.00	260.00	0.74	-4.65	-4.84	-1.09	4
0.00	270.00	-10.34	2.32	2.25	3.04	4	0.00	270.00	0.54	-2.06	-9.64	-3.50	4
0.00	280.00	-6.70	1.36	2.58	3.73	4	0.00	280.00	0.00	-0.09	-19.66	-7.42	4
0.00	290.00	-4.21	0.22	2.57	4.23	4	0.00	290.00	-0.72	1.33	-13.53	-13.16	4
0.00	300.00	-2.42	-1.51	2.17	4.17	4	0.00	300.00	-2.00	2.30	-6.62	-12.53	4
0.00	310.00	-1.19	-3.69	1.52	3.98	4	0.00	310.00	-3.95	2.87	-3.48	-6.90	4
0.00	320.00	-0.35	-6.24	0.54	3.53	4	0.00	320.00	-6.88	3.22	-1.58	-2.91	4
0.00	330.00	0.23	-8.38	-0.70	2.78	4	0.00	330.00	-11.21	3.33	-0.11	0.03	4
0.00	340.00	0.50	-7.55	-2.41	1.72	4	0.00	340.00	-17.40	3.42	0.91	1.73	4
0.00	350.00	0.51	-5.66	-4.82	-0.10	4	0.00	350.00	-13.52	3.24	1.48	2.81	4
15.00	0.00	0.08	-0.66	-12.13	-6.49	4	15.00	0.00	-10.16	2.08	0.66	3.01	4
15.00	10.00	0.29	0.67	-22.08	-10.31	4	15.00	10.00	-10.73	1.03	0.67	3.14	4
15.00	20.00	-0.07	1.52	-16.65	-10.75	4	15.00	20.00	-8.37	-0.50	0.57	2.74	4
15.00	30.00	-1.30	2.24	-9.70	-7.29	4	15.00	30.00	-4.80	-2.53	0.27	2.26	4
15.00	40.00	-3.64	2.80	-5.92	-4.12	4	15.00	40.00	-2.14	-5.38	-0.40	1.84	4
15.00	50.00	-7.71	3.26	-3.21	-1.73	4	15.00	50.00	-0.50	-9.12	-1.24	1.25	4
15.00	60.00	-14.56	3.26	-1.72	-0.15	4	15.00	60.00	0.06	-14.10	-2.42	0.42	4
15.00	70.00	-24.49	2.98	-0.98	0.95	4	15.00	70.00	0.05	-12.48	-4.81	-0.95	4
15.00	80.00	-15.69	2.39	-0.40	1.37	4	15.00	80.00	-0.16	-6.22	-8.78	-2.88	4
15.00	90.00	-11.61	1.50	0.32	1.62	4	15.00	90.00	-0.50	-2.33	-16.19	-5.47	4
15.00	100.00	-9.11	0.28	0.71	1.50	4	15.00	100.00	-0.71	-0.23	-23.99	-7.92	4
15.00	110.00	-7.15	-1.57	0.58	1.48	4	15.00	110.00	-1.10	0.87	-11.76	-7.92	4
15.00	120.00	-5.31	-3.89	0.05	1.01	4	15.00	120.00	-1.70	1.28	-6.24	-5.82	4
15.00	130.00	-3.66	-6.52	-0.98	0.38	4	15.00	130.00	-2.42	1.24	-3.47	-3.81	4
15.00	140.00	-2.29	-8.18	-2.75	-0.79	4	15.00	140.00	-3.86	1.07	-1.95	-2.44	4

15.00	150.00	-1.37	-7.59	-4.97	-2.51	4	15.00	150.00	-5.55	0.64	-0.87	-1.52	4
15.00	160.00	-0.95	-5.52	-7.68	-4.71	4	15.00	160.00	-7.04	0.12	-0.13	-0.57	4
15.00	170.00	-0.81	-3.49	-12.03	-6.92	4	15.00	170.00	-7.96	-0.87	0.23	0.16	4
15.00	180.00	-1.36	-1.74	-13.75	-10.53	4	15.00	180.00	-7.30	-2.60	0.52	0.77	4
15.00	190.00	-2.05	-0.56	-9.28	-17.19	4	15.00	190.00	-5.76	-5.00	0.68	0.71	4
15.00	200.00	-3.28	0.42	-5.93	-21.96	4	15.00	200.00	-4.22	-7.93	0.71	0.05	4
15.00	210.00	-4.25	1.03	-3.33	-10.95	4	15.00	210.00	-3.36	-10.89	0.32	-0.66	4
15.00	220.00	-5.35	1.08	-1.38	-7.40	4	15.00	220.00	-2.90	-11.39	-0.70	-1.18	4
15.00	230.00	-6.09	1.00	0.21	-5.49	4	15.00	230.00	-2.58	-8.75	-2.21	-2.02	4
15.00	240.00	-6.49	0.86	1.45	-4.47	4	15.00	240.00	-2.23	-6.03	-4.78	-2.98	4
15.00	250.00	-7.13	0.67	2.39	-3.30	4	15.00	250.00	-1.96	-4.21	-8.54	-4.38	4
15.00	260.00	-7.51	0.08	2.97	-1.86	4	15.00	260.00	-1.57	-2.37	-13.87	-6.46	4
15.00	270.00	-7.09	-0.98	3.24	-0.70	4	15.00	270.00	-1.78	-0.77	-19.51	-10.76	4
15.00	280.00	-5.29	-2.27	3.22	0.01	4	15.00	280.00	-2.27	0.38	-12.00	-18.85	4
15.00	290.00	-3.85	-3.86	2.90	0.46	4	15.00	290.00	-3.30	1.53	-6.31	-21.41	4
15.00	300.00	-2.67	-5.25	1.90	1.18	4	15.00	300.00	-4.83	2.28	-3.32	-10.36	4
15.00	310.00	-1.87	-6.59	0.63	1.47	4	15.00	310.00	-6.29	2.82	-2.01	-5.87	4
15.00	320.00	-1.46	-7.12	-0.75	1.09	4	15.00	320.00	-7.72	3.19	-1.13	-2.67	4
15.00	330.00	-1.12	-6.49	-2.66	0.15	4	15.00	330.00	-8.77	3.24	-0.33	-0.37	4
15.00	340.00	-1.04	-4.88	-4.71	-1.02	4	15.00	340.00	-9.10	2.92	0.15	0.78	4
15.00	350.00	-0.75	-4.08	-5.93	-1.89	4	15.00	350.00	-9.35	2.74	0.46	1.20	4
30.00	0.00	0.47	-9.06	-12.75	-13.52	4	30.00	0.00	-6.26	-1.23	0.67	-3.50	4
30.00	10.00	0.86	-8.40	-15.68	-15.42	4	30.00	10.00	-6.46	-1.99	0.65	-3.53	4
30.00	20.00	1.61	-7.10	-16.35	-11.83	4	30.00	20.00	-7.16	-3.46	-0.21	-3.16	4
30.00	30.00	1.93	-5.36	-9.96	-6.87	4	30.00	30.00	-5.72	-5.28	-1.59	-3.45	4
30.00	40.00	1.46	-4.34	-6.07	-4.07	4	30.00	40.00	-2.97	-6.60	-3.99	-4.61	4
30.00	50.00	-0.45	-3.39	-5.30	-2.46	4	30.00	50.00	-0.69	-7.91	-7.34	-4.67	4
30.00	60.00	-4.43	-2.07	-5.11	-1.04	4	30.00	60.00	0.14	-13.65	-10.75	-3.46	4
30.00	70.00	-11.37	-0.97	-4.10	0.48	4	30.00	70.00	-0.21	-20.81	-7.84	-2.89	4
30.00	80.00	-17.93	-0.84	-1.63	1.66	4	30.00	80.00	-0.17	-8.67	-8.06	-3.25	4
30.00	90.00	-11.23	-1.67	-1.09	2.25	4	30.00	90.00	0.57	-3.70	-14.83	-5.32	4
30.00	100.00	-8.22	-2.96	-2.48	1.86	4	30.00	100.00	0.34	-1.02	-20.60	-8.97	4
30.00	110.00	-7.00	-4.74	-3.31	0.57	4	30.00	110.00	-1.01	-0.26	-21.94	-10.98	4
30.00	120.00	-5.67	-7.36	-3.38	0.45	4	30.00	120.00	-2.58	-0.82	-15.32	-12.59	4
30.00	130.00	-3.86	-8.90	-4.50	1.62	4	30.00	130.00	-3.59	-2.87	-9.17	-9.61	4
30.00	140.00	-2.46	-9.94	-6.27	1.18	4	30.00	140.00	-4.92	-5.19	-6.75	-5.12	4
30.00	150.00	-2.10	-13.03	-9.02	-0.51	4	30.00	150.00	-7.20	-5.22	-4.51	-2.79	4
30.00	160.00	-2.63	-14.66	-12.75	-2.46	4	30.00	160.00	-9.91	-4.57	-3.20	-2.31	4
30.00	170.00	-3.22	-11.74	-18.64	-4.51	4	30.00	170.00	-11.55	-5.83	-1.87	-2.39	4
30.00	180.00	-4.04	-8.60	-20.59	-6.67	4	30.00	180.00	-9.28	-8.13	-1.05	-1.83	4
30.00	190.00	-5.59	-5.92	-13.46	-9.68	4	30.00	190.00	-7.02	-10.47	-0.42	-1.26	4
30.00	200.00	-6.75	-3.60	-8.29	-13.28	4	30.00	200.00	-4.75	-14.23	0.12	-1.68	4
30.00	210.00	-8.95	-2.34	-4.59	-17.35	4	30.00	210.00	-4.50	-15.84	-0.22	-3.66	4
30.00	220.00	-10.92	-1.57	-2.36	-19.47	4	30.00	220.00	-4.53	-9.82	-0.93	-4.21	4
30.00	230.00	-13.39	-2.18	-0.70	-21.82	4	30.00	230.00	-3.61	-6.43	-1.68	-4.95	4
30.00	240.00	-13.76	-2.93	0.01	-16.35	4	30.00	240.00	-2.72	-5.05	-3.47	-6.87	4
30.00	250.00	-9.60	-2.60	0.42	-10.69	4	30.00	250.00	-2.67	-3.01	-6.10	-9.67	4
30.00	260.00	-6.15	-2.81	0.27	-7.93	4	30.00	260.00	-2.92	-1.07	-9.48	-8.46	4
30.00	270.00	-3.98	-3.20	0.96	-7.96	4	30.00	270.00	-4.40	0.07	-14.09	-7.08	4
30.00	280.00	-3.24	-4.28	1.87	-8.63	4	30.00	280.00	-7.70	0.80	-23.09	-12.52	4
30.00	290.00	-3.70	-5.48	2.31	-11.23	4	30.00	290.00	-10.19	1.35	-14.15	-23.78	4
30.00	300.00	-4.07	-7.32	2.26	-13.42	4	30.00	300.00	-10.66	2.03	-7.76	-18.83	4
30.00	310.00	-3.66	-11.12	1.61	-19.47	4	30.00	310.00	-10.77	2.42	-4.73	-20.75	4
30.00	320.00	-2.30	-17.97	0.71	-21.34	4	30.00	320.00	-10.26	2.19	-2.94	-16.49	4
30.00	330.00	-0.79	-24.33	0.08	-11.24	4	30.00	330.00	-10.31	1.55	-1.47	-11.50	4
30.00	340.00	0.04	-19.80	-1.37	-8.35	4	30.00	340.00	-9.04	0.96	-0.52	-8.61	4

30.00	350.00	0.17	-14.15	-4.10	-8.50	4	30.00	350.00	-6.74	0.43	-0.07	-7.68	4
45.00	0.00	1.93	-10.85	-9.02	-10.43	4	45.00	0.00	-6.79	-1.51	-0.49	-9.60	4
45.00	10.00	2.89	-8.72	-17.61	-6.27	4	45.00	10.00	-4.82	-2.92	-1.98	-5.55	4
45.00	20.00	3.06	-7.65	-12.14	-6.32	4	45.00	20.00	-2.76	-4.25	-4.75	-2.04	4
45.00	30.00	2.03	-7.65	-8.25	-7.60	4	45.00	30.00	-1.20	-5.32	-6.85	-0.56	4
45.00	40.00	0.05	-8.44	-5.85	-4.42	4	45.00	40.00	-0.19	-6.37	-10.81	0.53	4
45.00	50.00	-3.27	-10.08	-4.82	-1.26	4	45.00	50.00	0.60	-7.49	-12.44	1.58	4
45.00	60.00	-10.11	-11.79	-6.44	1.75	4	45.00	60.00	0.50	-9.58	-9.29	-0.01	4
45.00	70.00	-29.15	-8.68	-4.97	1.58	4	45.00	70.00	-0.50	-9.38	-9.21	-4.76	4
45.00	80.00	-14.66	-8.11	-2.69	1.38	4	45.00	80.00	0.21	-9.93	-14.45	-7.22	4
45.00	90.00	-10.37	-10.78	-4.44	2.34	4	45.00	90.00	0.89	-7.53	-18.39	-14.45	4
45.00	100.00	-8.64	-13.45	-6.32	0.09	4	45.00	100.00	-0.98	-4.09	-22.23	-21.10	4
45.00	110.00	-6.50	-15.40	-6.54	1.03	4	45.00	110.00	-3.83	-2.67	-22.72	-21.33	4
45.00	120.00	-5.16	-14.74	-7.09	1.98	4	45.00	120.00	-6.29	-4.49	-10.89	-12.87	4
45.00	130.00	-4.95	-9.12	-9.06	0.67	4	45.00	130.00	-9.46	-4.65	-5.94	-7.38	4
45.00	140.00	-5.45	-8.54	-11.71	-0.35	4	45.00	140.00	-14.33	-4.78	-2.78	-3.00	4
45.00	150.00	-6.85	-9.77	-12.76	-2.14	4	45.00	150.00	-19.26	-5.14	-1.52	-1.65	4
45.00	160.00	-8.85	-12.32	-13.99	-4.49	4	45.00	160.00	-20.29	-5.45	-1.89	-1.47	4
45.00	170.00	-8.35	-15.59	-12.30	-6.70	4	45.00	170.00	-19.07	-6.48	-2.33	-1.34	4
45.00	180.00	-5.31	-13.38	-9.13	-9.15	4	45.00	180.00	-14.97	-8.74	-2.89	-1.20	4
45.00	190.00	-3.81	-9.38	-6.54	-13.28	4	45.00	190.00	-8.70	-10.08	-3.69	-0.69	4
45.00	200.00	-4.03	-7.01	-4.07	-16.33	4	45.00	200.00	-4.26	-9.03	-3.62	0.27	4
45.00	210.00	-5.38	-6.26	-2.53	-16.93	4	45.00	210.00	-2.00	-6.67	-3.20	0.11	4
45.00	220.00	-6.44	-6.99	-1.40	-19.86	4	45.00	220.00	-0.57	-4.29	-3.73	-1.61	4
45.00	230.00	-7.43	-7.37	-1.17	-13.44	4	45.00	230.00	0.86	-3.36	-4.29	-3.21	4
45.00	240.00	-8.22	-6.96	-0.98	-8.42	4	45.00	240.00	1.44	-3.81	-3.81	-3.40	4
45.00	250.00	-7.63	-6.51	0.47	-5.36	4	45.00	250.00	0.24	-4.94	-4.33	-6.80	4
45.00	260.00	-4.25	-6.73	1.32	-5.43	4	45.00	260.00	-2.04	-4.07	-9.97	-15.39	4
45.00	270.00	-1.63	-8.32	2.16	-5.39	4	45.00	270.00	-4.29	-1.23	-18.57	-17.59	4
45.00	280.00	-2.43	-13.06	2.75	-4.40	4	45.00	280.00	-7.46	0.50	-14.55	-12.41	4
45.00	290.00	-5.99	-22.46	2.58	-5.65	4	45.00	290.00	-8.83	0.83	-8.58	-11.73	4
45.00	300.00	-8.04	-24.82	2.04	-8.69	4	45.00	300.00	-8.23	0.71	-6.01	-15.03	4
45.00	310.00	-5.99	-22.55	1.61	-14.11	4	45.00	310.00	-9.95	0.03	-5.26	-12.19	4
45.00	320.00	-2.98	-26.16	0.16	-12.58	4	45.00	320.00	-10.89	-0.09	-5.16	-15.01	4
45.00	330.00	-1.50	-28.44	-1.34	-13.43	4	45.00	330.00	-13.91	-0.06	-4.24	-23.16	4
45.00	340.00	-0.80	-22.49	-2.82	-14.92	4	45.00	340.00	-14.51	-0.16	-3.57	-12.81	4
45.00	350.00	-0.61	-19.61	-3.17	-16.19	4	45.00	350.00	-13.94	-0.23	-2.73	-9.27	4
60.00	0.00	-0.75	-15.04	-4.77	-21.35	4	60.00	0.00	-8.96	1.26	-2.86	-4.94	4
60.00	10.00	0.01	-16.24	-6.85	-18.54	4	60.00	10.00	-8.69	0.86	-3.16	-6.52	4
60.00	20.00	1.33	-16.58	-19.36	-17.95	4	60.00	20.00	-7.24	0.00	-6.74	-6.08	4
60.00	30.00	1.70	-17.03	-11.60	-12.07	4	60.00	30.00	-3.97	-1.13	-24.16	-1.27	4
60.00	40.00	0.18	-15.56	-8.70	-6.10	4	60.00	40.00	-1.55	-3.60	-8.57	1.18	4
60.00	50.00	-2.97	-12.18	-8.62	-3.56	4	60.00	50.00	-1.32	-6.51	-6.53	0.06	4
60.00	60.00	-7.19	-10.13	-9.69	-3.95	4	60.00	60.00	-0.47	-7.15	-5.23	-1.12	4
60.00	70.00	-11.47	-9.56	-8.49	-1.34	4	60.00	70.00	-0.23	-10.35	-6.74	-2.80	4
60.00	80.00	-8.85	-13.16	-5.04	0.12	4	60.00	80.00	0.06	-18.65	-16.82	-7.74	4
60.00	90.00	-10.06	-21.90	-7.33	0.91	4	60.00	90.00	-0.14	-15.20	-23.30	-6.62	4
60.00	100.00	-21.68	-14.33	-9.07	2.01	4	60.00	100.00	-2.14	-13.25	-20.36	-5.69	4
60.00	110.00	-13.88	-9.24	-6.14	1.23	4	60.00	110.00	-5.17	-8.00	-9.89	-5.28	4
60.00	120.00	-9.58	-11.75	-6.07	3.02	4	60.00	120.00	-8.46	-3.53	-6.90	-10.53	4
60.00	130.00	-7.27	-11.38	-9.12	1.52	4	60.00	130.00	-20.70	-4.06	-4.14	-12.01	4
60.00	140.00	-4.68	-14.23	-8.88	1.63	4	60.00	140.00	-14.58	-3.64	-4.24	-6.07	4
60.00	150.00	-3.57	-12.20	-10.59	2.48	4	60.00	150.00	-12.48	-4.96	-3.88	-2.14	4
60.00	160.00	-4.98	-12.62	-15.11	0.17	4	60.00	160.00	-15.00	-4.41	-2.82	-2.05	4
60.00	170.00	-7.85	-20.97	-15.60	-3.20	4	60.00	170.00	-15.84	-3.50	-3.84	-0.54	4
60.00	180.00	-9.66	-19.01	-14.21	-5.05	4	60.00	180.00	-23.30	-6.23	-4.08	0.68	4

60.00	190.00	-10.92	-12.05	-10.01	-5.95	4	60.00	190.00	-13.43	-12.64	-2.85	1.02	4
60.00	200.00	-9.64	-9.66	-5.41	-6.25	4	60.00	200.00	-5.27	-29.05	-3.20	0.85	4
60.00	210.00	-7.39	-10.02	-1.86	-5.94	4	60.00	210.00	-1.61	-11.31	-5.10	0.02	4
60.00	220.00	-5.23	-11.78	0.24	-6.92	4	60.00	220.00	0.29	-7.89	-7.17	-0.08	4
60.00	230.00	-3.73	-17.42	1.10	-10.32	4	60.00	230.00	1.51	-7.64	-10.80	0.26	4
60.00	240.00	-4.34	-37.77	1.26	-13.20	4	60.00	240.00	2.31	-6.10	-12.10	-1.60	4
60.00	250.00	-6.68	-18.15	0.73	-13.88	4	60.00	250.00	2.44	-5.42	-11.55	-4.07	4
60.00	260.00	-7.30	-9.19	0.67	-13.16	4	60.00	260.00	0.89	-8.14	-11.09	-7.77	4
60.00	270.00	-6.43	-8.07	2.68	-15.49	4	60.00	270.00	-1.72	-4.54	-19.02	-11.41	4
60.00	280.00	-5.66	-10.82	2.71	-16.02	4	60.00	280.00	-4.58	-0.73	-16.39	-21.33	4
60.00	290.00	-3.81	-14.58	2.09	-13.48	4	60.00	290.00	-6.97	0.58	-9.90	-11.90	4
60.00	300.00	-5.69	-17.72	1.46	-10.85	4	60.00	300.00	-10.67	0.94	-8.08	-9.67	4
60.00	310.00	-5.36	-21.17	0.64	-7.95	4	60.00	310.00	-15.98	0.22	-10.16	-16.04	4
60.00	320.00	-2.55	-38.86	0.88	-12.26	4	60.00	320.00	-27.02	0.53	-9.21	-9.66	4
60.00	330.00	-3.08	-19.93	-0.85	-27.33	4	60.00	330.00	-11.56	1.90	-6.65	-11.46	4
60.00	340.00	-3.70	-18.99	-2.07	-23.77	4	60.00	340.00	-7.99	2.85	-6.66	-10.98	4
60.00	350.00	-1.68	-20.04	-1.19	-18.34	4	60.00	350.00	-8.64	2.51	-5.39	-6.10	4
75.00	0.00	-0.23	-22.94	-4.23	-23.61	4	75.00	0.00	-6.89	0.34	-1.20	-5.65	4
75.00	10.00	-1.27	-21.00	-8.23	-20.79	4	75.00	10.00	-7.03	-0.57	-2.73	-2.57	4
75.00	20.00	0.56	-23.55	-17.72	-13.17	4	75.00	20.00	-7.64	-1.91	-11.31	0.26	4
75.00	30.00	0.31	-18.42	-10.34	-7.07	4	75.00	30.00	-5.12	-4.40	-5.34	0.17	4
75.00	40.00	-3.15	-12.94	-10.43	-4.95	4	75.00	40.00	-2.35	-7.80	-3.57	-2.88	4
75.00	50.00	-3.23	-10.74	-9.3	-4.05	4	75.00	50.00	-0.54	-10.89	-7.4	-4.36	4
75.00	60.00	-1.88	-14.06	-17.07	-0.81	4	75.00	60.00	-1.24	-18.89	-7.54	-5.69	4
75.00	70.00	-6.24	-22.90	-17.95	0.84	4	75.00	70.00	-2.52	-26.19	-12.29	-7.87	4
75.00	80.00	-6.83	-26.10	-12.24	1.96	4	75.00	80.00	-3.69	-16.36	-18.45	-9.61	4
75.00	90.00	-8.9	-17.83	-6.26	2.22	4	75.00	90.00	-5.37	-10.33	-14.58	-4.92	4
75.00	100.00	-18.26	-17.36	-5.5	3.52	4	75.00	100.00	-4.59	-5.37	-13.39	-6.85	4
75.00	110.00	-18.44	-13.41	-6.90	2.05	4	75.00	110.00	-9.31	-4.86	-12.90	-10.14	4
75.00	120.00	-14.7	-12.46	-10.16	1.85	4	75.00	120.00	-13.2	-2.09	-7.29	-29.52	4
75.00	130.00	-9.89	-18.84	-8.72	2.16	4	75.00	130.00	-10.48	-0.65	-4.44	-13.10	4
75.00	140.00	-11.89	-13.65	-7.57	1.82	4	75.00	140.00	-9.83	-2.95	-2.36	-7.58	4
75.00	150.00	-18.66	-12.74	-8.10	-1.51	4	75.00	150.00	-11.90	-3.66	-2.06	-5.34	4
75.00	160.00	-13.10	-20.04	-8.71	-4.09	4	75.00	160.00	-14.21	-2.65	-2.84	-3.55	4
75.00	170.00	-9.17	-12.42	-8.08	-3.28	4	75.00	170.00	-30.78	-6.36	-2.22	-1.85	4
75.00	180.00	-6.98	-9.39	-6.69	-2.03	4	75.00	180.00	-9.94	-14.39	-1.01	-1.16	4
75.00	190.00	-8.06	-9.57	-6.39	-1.64	4	75.00	190.00	-3.52	-9.29	-0.30	-2.07	4
75.00	200.00	-12.10	-10.24	-5.54	-1.99	4	75.00	200.00	-0.71	-4.33	-0.23	-3.30	4
75.00	210.00	-3.88	-12.46	-2.19	-1.92	4	75.00	210.00	0.16	-3.33	-1.10	-2.57	4
75.00	220.00	-0.76	-20.90	0.06	-1.97	4	75.00	220.00	-0.25	-1.85	-5.37	-1.66	4
75.00	230.00	-1.88	-20.68	0.53	-3.14	4	75.00	230.00	0.16	-1.75	-11.68	-3.26	4
75.00	240.00	-5.97	-14.29	1.12	-5.30	4	75.00	240.00	-0.73	-3.26	-10.15	-3.90	4
75.00	250.00	-8.67	-11.76	0.93	-5.41	4	75.00	250.00	-1.86	-6.84	-12.58	-5.81	4
75.00	260.00	-7.98	-12.36	0.53	-7.54	4	75.00	260.00	-1.42	-6.74	-16.08	-6.26	4
75.00	270.00	-6.69	-13.45	1.50	-9.31	4	75.00	270.00	-3.34	-2.82	-22.56	-17.10	4
75.00	280.00	-4.81	-14.21	1.75	-11.19	4	75.00	280.00	-4.78	0.56	-17.67	-19.72	4
75.00	290.00	-4.39	-15.72	1.18	-10.65	4	75.00	290.00	-6.23	1.95	-12.29	-10.54	4
75.00	300.00	-3.96	-24.94	-0.40	-25.54	4	75.00	300.00	-7.88	2.43	-8.63	-11.10	4
75.00	310.00	-2.92	-21.03	-1.58	-14.31	4	75.00	310.00	-8.48	3.27	-12.40	-6.25	4
75.00	320.00	-3.36	-14.39	-0.99	-16.00	4	75.00	320.00	-4.88	3.56	-4.44	-3.38	4
75.00	330.00	-3.02	-15.29	-3.41	-18.29	4	75.00	330.00	-3.30	3.27	-4.37	-9.16	4
75.00	340.00	0.26	-18.11	-3.73	-28.19	4	75.00	340.00	-4.43	2.68	-5.01	-14.27	4
75.00	350.00	1.41	-21.45	-2.61	-15.74	4	75.00	350.00	-6.11	2.35	-4.92	-10.83	4
90.00	0.00	-0.05	-19.18	-7.80	-12.42	4	90.00	0.00	-10.49	-1.33	-1.87	-2.71	4
90.00	10.00	-2.83	-17.07	-9.33	-9.76	4	90.00	10.00	-8.92	-1.56	-3.02	-3.64	4
90.00	20.00	-5.71	-13.98	-13.27	-10.57	4	90.00	20.00	-7.75	-2.21	-8.60	-4.94	4