# EWM322T/EWA322T – ANTENNA

2023-06-20 v6

# DUT

**Model**

EWM322T/EWA322T

**Manufacturer**

Technicolor Connected Home USA LLC
4855 Peachtree Industrial Blvd. Suite 200 Norcross, Georgia 30092.

| WLAN | 2G | 5G | 6G |
|---|---|---|---|
| Chipset | BCM6715 | BCM6715 | BCM6715 |
| MIMO | 4x4 | 4x4 | 4x4 |
| Interface | wl2 | wl1 | wl0 |
| BW | 20/40MHz | 20/40/80/160MHz | 20/40/80/160MHz |
| Frequencies (20MHz channels central frequencies) | 2412MHz - 2462MHz | 5180MHz - 5825MHz | 5955MHz - 7115MHz |

technicolor
FEEL THE WONDER

# 2G – 5G chipsets RF connectors

The Photo Please refer to Antenna Test Photo

# 6G chipset RF connectors

The Photo Please refer to Antenna Test Photo

# Antenna

| Wi-Fi Antenna | Frequency band | IPN | Decription |
|---|---|---|---|
| DB1 | 2.4/5GHz | 6322922A | ANTENNA PCB antenna Off-board DUAL BAND 2.4/5.0 GHZ W COAX CABLE 82MM BLUE MODULE DB1 EWA322TGFR2 |
| DB2 | 2.4/5GHz | 6322923A | ANTENNA PCB antenna Off-board DUAL BAND 2.4/5.0 GHZ W COAX CABLE 111MM GREY MODULE DB2 EWA322TGFR2 |
| DB3 | 2.4/5GHz | 6322924A | ANTENNA PCB antenna Off-board DUAL BAND 2.4/5.0 GHZ W COAX CABLE 145MM WHITE MODULE DB3 EWA322TGFR2 |
| DB4 | 2.4/5GHz | 6322925A | ANTENNA PCB antenna Off-board DUAL BAND 2.4/5.0 GHZ W COAX CABLE 129MM BLACK MODULE DB4 EWA322TGFR2 |
| | | | |
| 6G1 | 6GHz | 6322927A | ANTENNA PCB antenna Off-board 6GHZ W COAX CABLE 68MM BLUE MODULE 6G1 EWA322TGFR2 |
| 6G2 | 6GHz | 6322928A | ANTENNA PCB antenna Off-board 6GHZ W COAX CABLE 85MM WHITE MODULE 6G2 EWA322TGFR2 |
| 6G3 | 6GHz | 6322929A | ANTENNA PCB antenna Off-board 6GHZ W COAX CABLE 70MM BLACK MODULE 6G3 EWA322TGFR2 |
| 6G4 | 6GHz | 6322930A | ANTENNA PCB antenna Off-board 6GHZ W COAX CABLE 98MM GREY MODULE 6G4 EWA322TGFR2 |

- **All antennas are fabricated by LUXSHARE-ICT (Address：No.158 Jinchang Road, Jinxi Town, Suzhou, Jiangsu province, China)**

# Dual-band 2,4/5GHz antenna

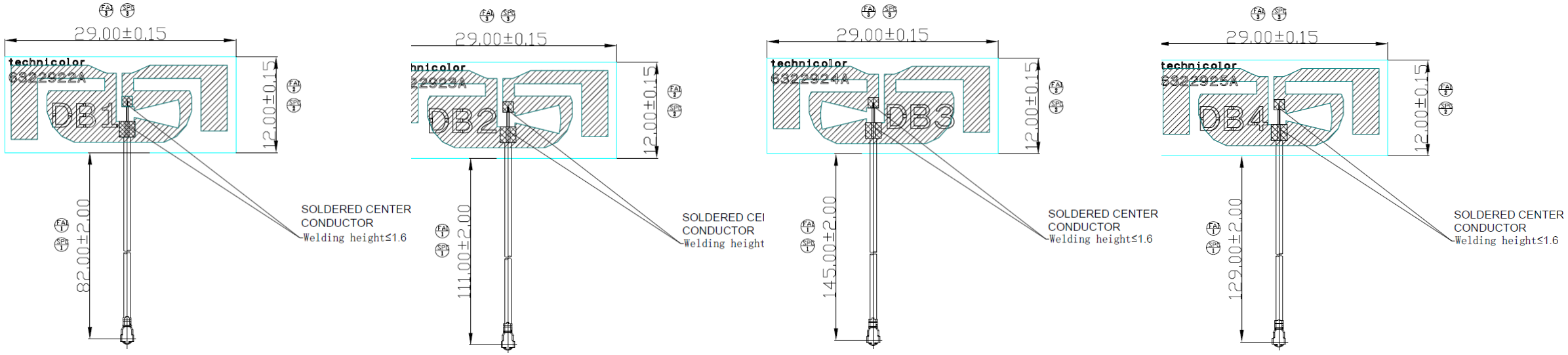




technicolor
FEEL THE WONDER

# 6GHz antenna

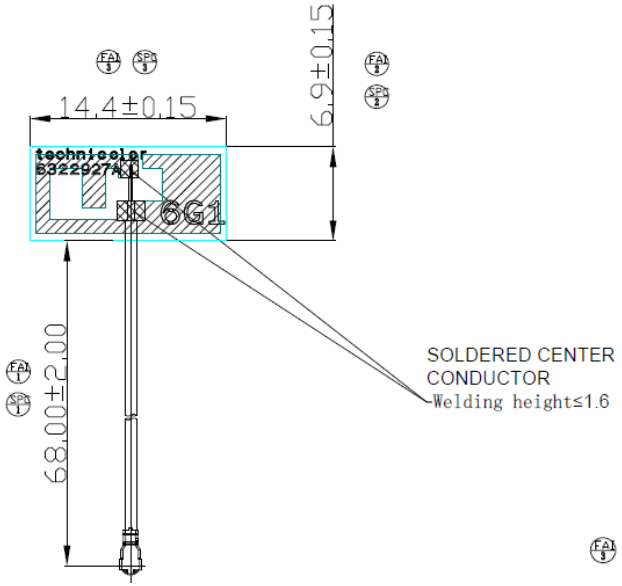


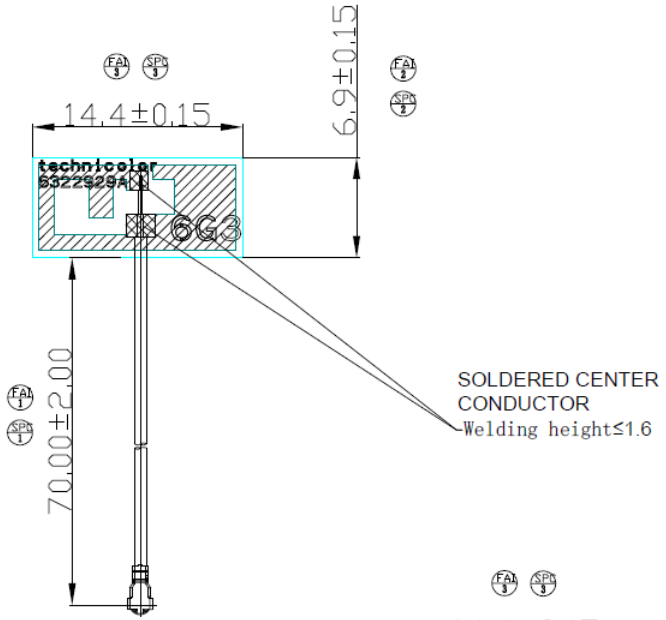


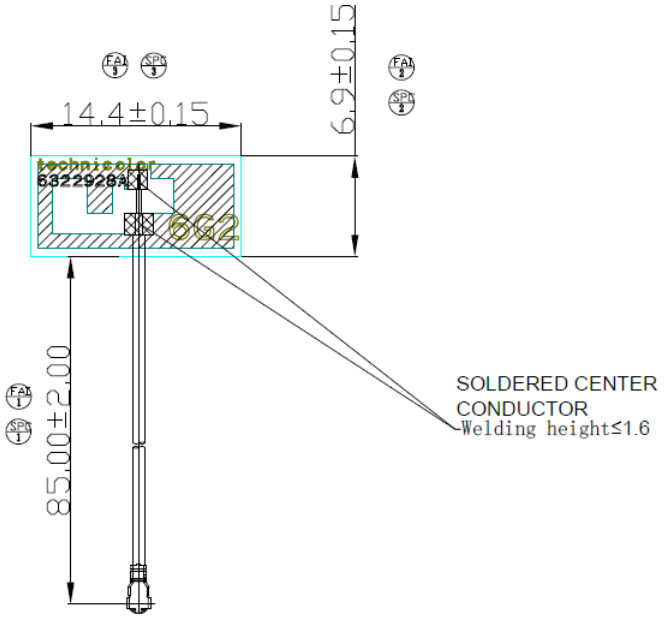


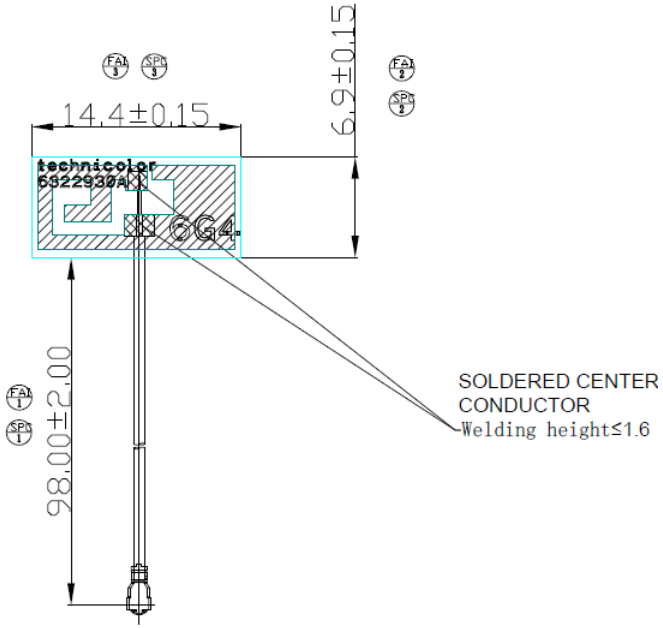


technicolor
FEEL THE WONDER

# Antenna test environment for the dual-band antennas

- **The dual-band antennas are tested in a full anechoic chamber (MVG/SG24) with the VNA Keysight/ E5071C**

The Photo Please refer to Antenna Test Photo

| | |
|---|---|
| Satimo SG24 | name of commercial test software |
| | spm1.3.1 and satenv 2.0.1.5 build12 |

| Device | Type/Mode | Serial | Manufacturer | Cal. Date | Cal. due Date |
|---|---|---|---|---|---|
| SG24 | Standard | SG24 | MVG | 11/15/2021 | 11/14/2022 |
| Turn Table | N/A | - | MVG | N/A | N/A |
| Power Supply Unit | CASTLE 3K(6G) | 190916-26590068 | SANTAK | N/A | N/A |
| Active Switching Unit | N/A | MODU-009-A-0120 | MVG | N/A | N/A |
| Control Unit SG24 | N/A | MODU-022-A-0032 | MVG | N/A | N/A |
| Amplification Unit | N/A | MODU-020-B-0005 | MVG | N/A | N/A |
| Cable 8m - 400MHz to 6GHz | SUCOFLEX 106 | SN 81469 /6 | MVG | 11/15/2021 | 11/14/2022 |
| Temperature & Humidity | deli | - | deli | N/A | N/A |
| ENA Series Network Analyzer | E5071C | MY46523087 | KeySight | 11/24/2021 | 11/23/2022 |



technicolor
FEEL THE WONDER

# Antenna test environment for the 6GHz antennas

- **The 6GHz antennas are tested in a full anechoic chamber (EMT-RCR120) with the VNA Keysight/ N5225B**

The Photo Please refer to Antenna Test Photo

| | |
|---|---|
| EMT-RCR120 Compact Antenna Test Range(CATR) | name of commercial test software |
| | EMT Far-Field Antenna Measurement System |

| Device | Type/Mode | Serial | Manufacturer | Cal.Date | Cal.Due Date |
|---|---|---|---|---|---|
| EMT-RCR120 | Standard | EMT-RCR120 | EM-Testing | 10/26/2021 | 10/25/2022 |
| Three-dimensional rotary table and its control system | Dongtintech | DT001201911104 | EM-Testing | N/A | N/A |
| PNA Network Analyzer | N5225B | MY58422424 | KeySight | 6/23/2022 | 6/23/2023 |
| Reflective surface system | RCR120 | - | EM-Testing | N/A | N/A |
| Feeders and their control systems | EMT4000 | - | EM-Testing | N/A | N/A |
| Power Supply Unit | CASTLE 3K(6G) | 190929-35470033 | SANTAK | N/A | N/A |
| Cable 4m - 5GHz to 50GHz | JB360 | - | Jun You | 10/26/2021 | 10/25/2022 |
| Temperature & Humidity | deli | - | deli | N/A | N/A |



technicolor
FEEL THE WONDER

# Antenna test setup

- Antennas are tested after a full calibration of the chamber (including the testing cable insertion loss)
- Antenna are tested in LUXSHARE-ICT (Address：No.158 Jinchang Road, Jinxi Town, Suzhou, Jiangsu province, China)
- Antennas are tested by Xucheng. Hu (xucheng.hu@luxshare-ict.com)
- Antennas are tested in 2022/08/02

The Photo Please refer to Antenna Test Photo



technicolor
FEEL THE WONDER

# Test procedure

- **The very common "gain comparison" method is used to measure the antenna gain in full anechoic chamber which contains the receiving and transmitting antennas**
- **The method requires an antenna which gain is exactly known (called gain standard).**
- **Two measurements are performed in receiving mode in the whole sphere in both vertical and horizontal polarizations:**
  - ✓ the reference antenna is first measured, providing the received power $P_0$
  - ✓ and secondly the test antenna, providing the received power $P_{AUT}$
  - ✓ both antennas are placed exactly in the same arrangement.
- **Then the formulae below are applied to calculate the gain:**

$$G_{AUT\ dB} + G_{0\ dB} = 20\log_{10}\left(\frac{4\pi R}{\lambda}\right) + 10\log_{10}\left(\frac{P_{AUT}}{P_0}\right)$$

$$G_{GS\ dB} + G_{0\ dB} = 20\log_{10}\left(\frac{4\pi R}{\lambda}\right) + 10\log_{10}\left(\frac{P_{GS}}{P_0}\right)$$

$$G_{AUT\ dB} = G_{GS\ dB} + 10\cdot\log_{10}\left(\frac{P_{AUT}}{P_{GS}}\right).$$

Where:
$G_{AUT}$ is the gain of the test antenna
$G_{GS}$ is the gain of the gain standard
$G_0$ is the gain of the transmitting antenna
R is the distance between the receiving and transmitting antennas
$\lambda$ is the wavelength



technicolor
FEEL THE WONDER

# Antenna gain pattern @2,4GHz

Horizontal plane

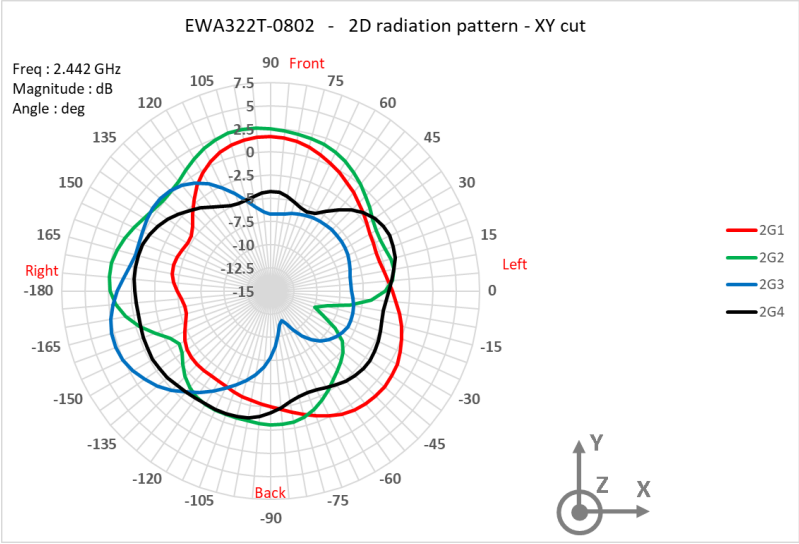


Vertical plane (right/left)

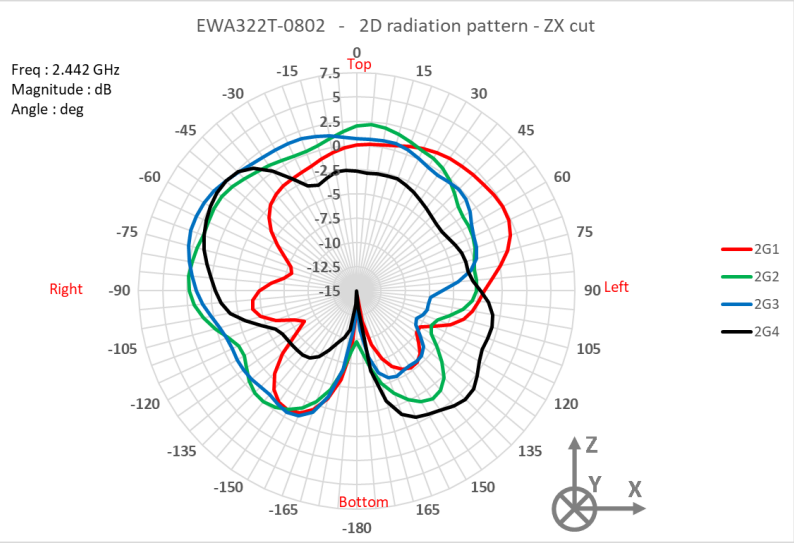


Vertical plane (front/back)

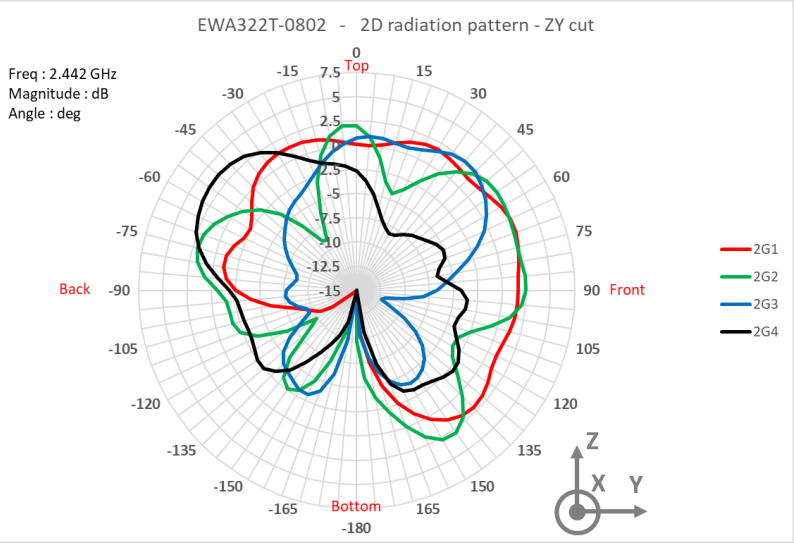




technicolor
FEEL THE WONDER

# Antenna gain pattern @5,49GHz

Horizontal plane

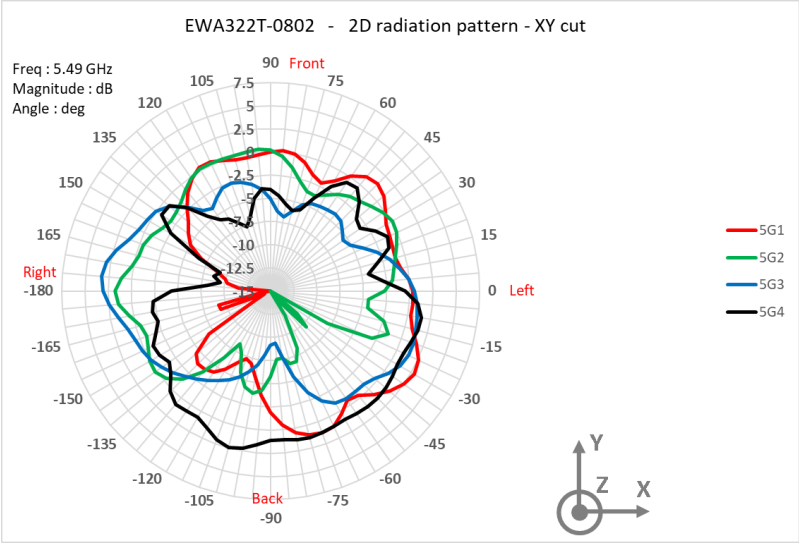


Vertical plane (right/left)

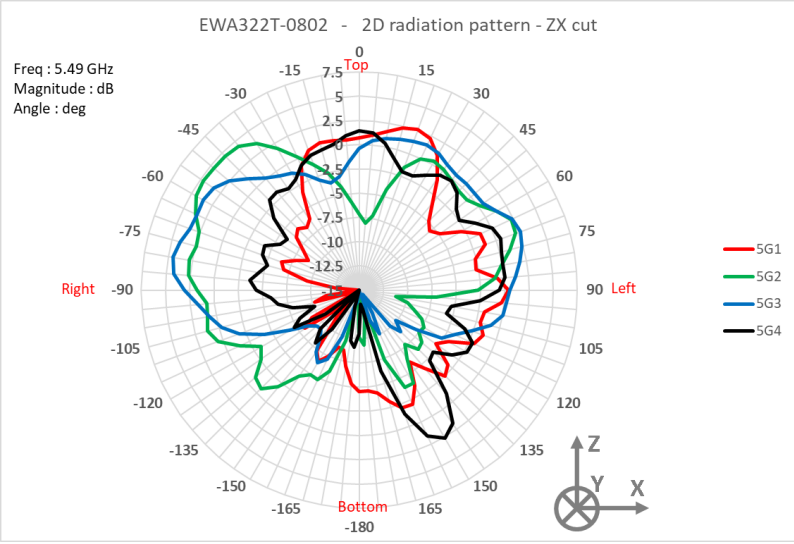


Vertical plane (front/back)

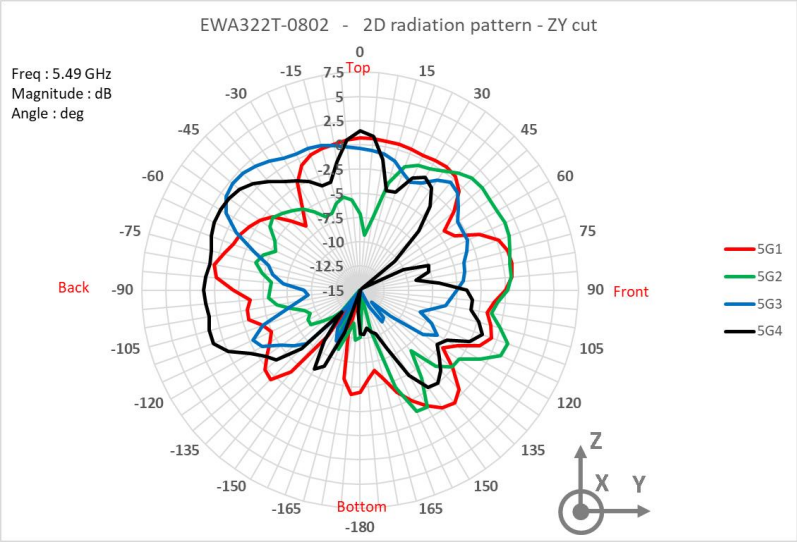




technicolor
FEEL THE WONDER

# Antenna gain pattern @6,295GHz

Horizontal plane

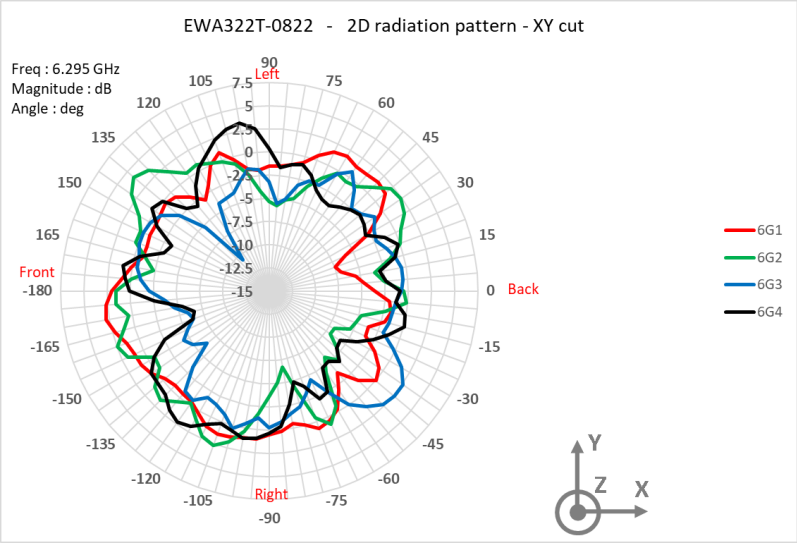


Vertical plane (right/left)

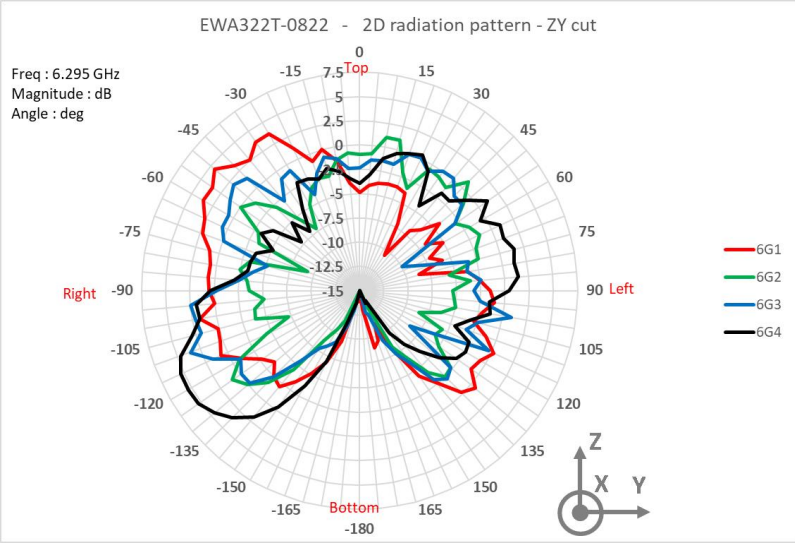


Vertical plane (front/back)

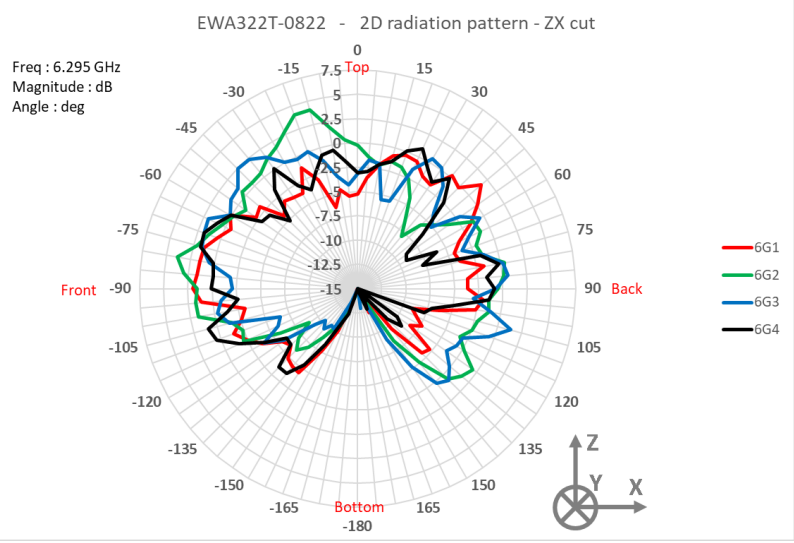




technicolor
FEEL THE WONDER

# Antennae gains

| Dual band antenna Gain (dBi) | | | | | | | | | | |
|---|---|---|---|---|---|---|---|---|---|---|
| **Frequency (MHz)** | **2400-2483.5** | **5170** | **5250** | **5330** | **5490** | **5600** | **5730** | **5735** | **5815** | **5835** |
| DB1 | 3,92 | 5,61 | 4,91 | 4,88 | 5,34 | 5,45 | 5,07 | 5,16 | 5,28 | 5,47 |
| DB2 | 3,49 | 5,96 | 5,65 | 5,77 | 5,65 | 5,91 | 5,53 | 5,24 | 4,79 | 4,8 |
| DB3 | 4,18 | 4,21 | 4,21 | 4,13 | 4,71 | 4,81 | 4,8 | 4,63 | 4,24 | 4,11 |
| DB4 | 4,52 | 3,96 | 3,51 | 4,18 | 2,75 | 4,06 | 3,61 | 3,68 | 3,86 | 3,75 |

| 6GHz antenna Gain (dBi) | | | | | | | | | | | | | | | | |
|---|---|---|---|---|---|---|---|---|---|---|---|---|---|---|---|---|
| **Frequency (MHz)** | **5925** | **5945** | **6055** | **6175** | **6295** | **6425** | **6475** | **6525** | **6615** | **6695** | **6775** | **6875** | **6955** | **6995** | **7035** | **7125** |
| 6G1 | 5,52 | 5,61 | 5,42 | 5,19 | 5,83 | 5,31 | 5,14 | 5,17 | 4,94 | 4,9 | 4,78 | 4,55 | 5,34 | 5,48 | 5,18 | 5,14 |
| 6G2 | 4,15 | 4,16 | 4,62 | 4,82 | 5,15 | 5,38 | 4,85 | 4,42 | 5,01 | 4,86 | 5,64 | 5,45 | 4,62 | 4,55 | 4,93 | 5,51 |
| 6G3 | 5,68 | 5,63 | 4,94 | 4,69 | 5,34 | 5,56 | 5,48 | 4,94 | 4,44 | 5,21 | 4,49 | 5,76 | 5,22 | 5,05 | 4,93 | 5,09 |
| 6G4 | 5,57 | 5,72 | 5,35 | 6,08 | 5,67 | 6,27 | 6 | 6,15 | 5,78 | 5,85 | 6,16 | 5,79 | 4,84 | 4,78 | 4,87 | 5,23 |



technicolor
FEEL THE WONDER

# versions

2022-09-01 v1: Initial release. Arnaud Goblet.
2023-02-03 v2: added radiation patterns, product and manufacturer information. AG
2023-06-07 v3: Add information on test environment and setup (page 8-10)
2023-06-08 v4: Add information on test SW and list of test equipment (page 8-9)
2023-06-15 v5: update the equipment calibration dates (page 8-9), highlight test personnel name (page 10), add test procedure (page 11)



technicolor
FEEL THE WONDER