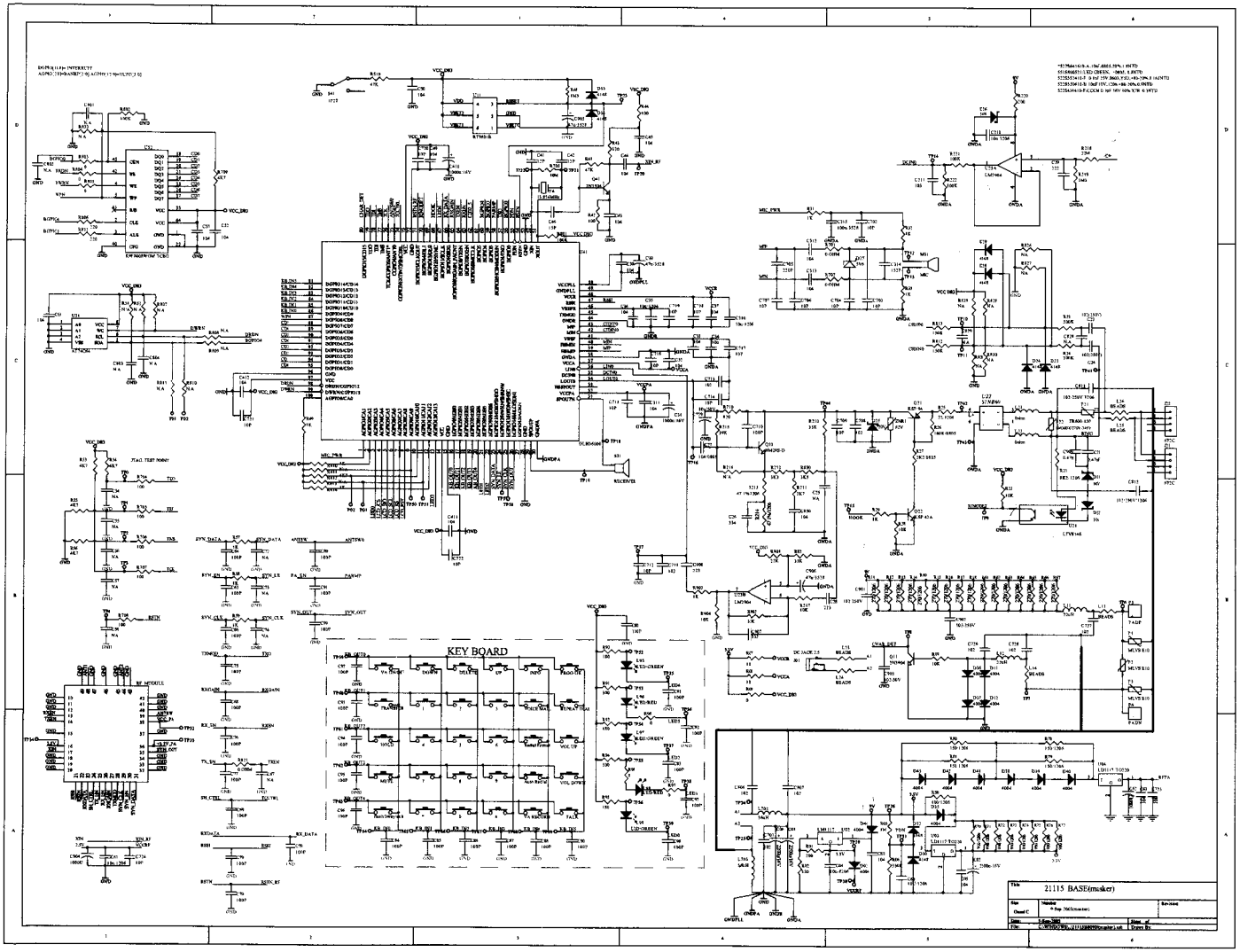

FCC ID: G9H2-1115A
Marstech Report No. 23339D
EXHIBIT C(2)-1

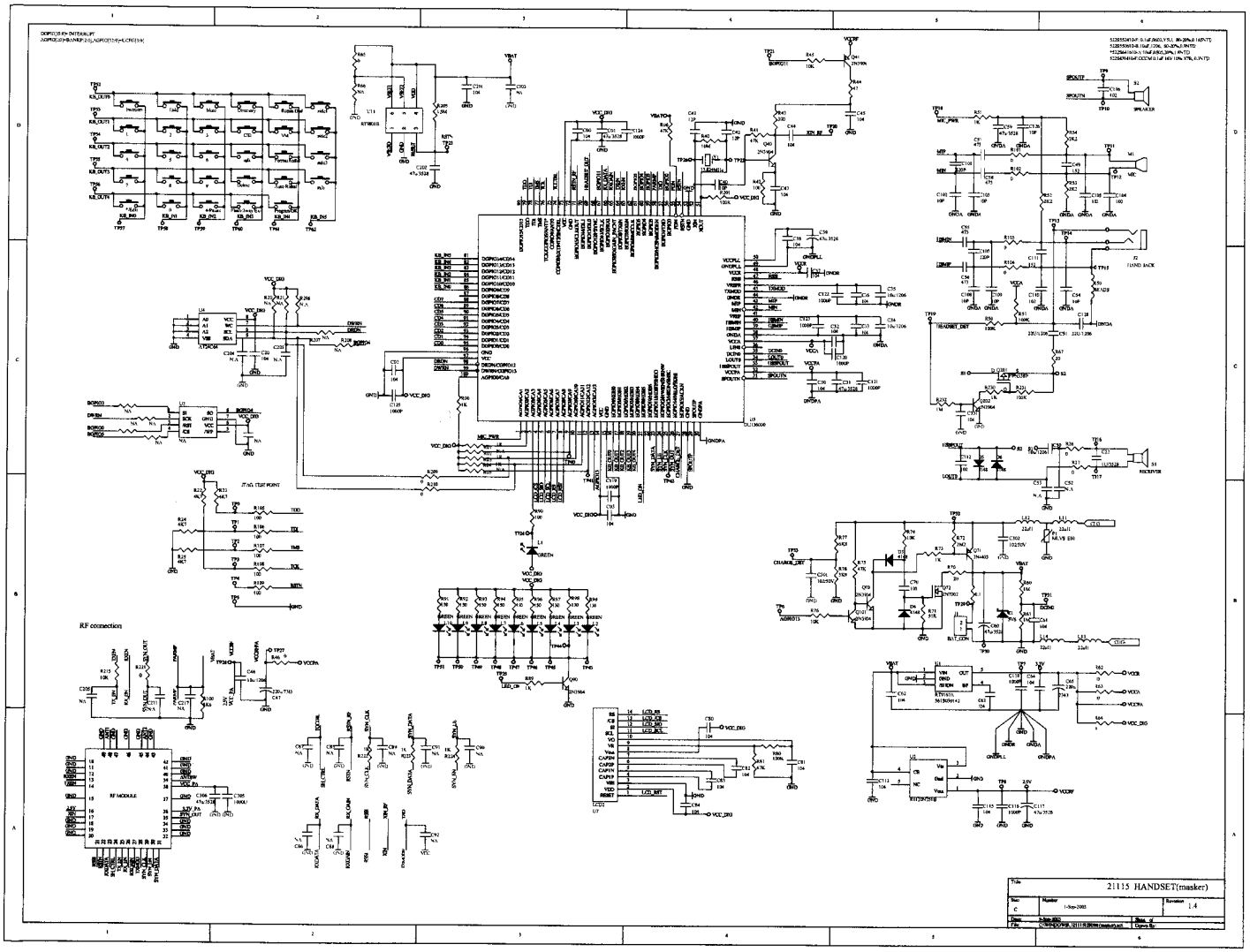

FCC ID: G9H2-1115A
Marstech Report No. 23339D
EXHIBIT C(2)-2

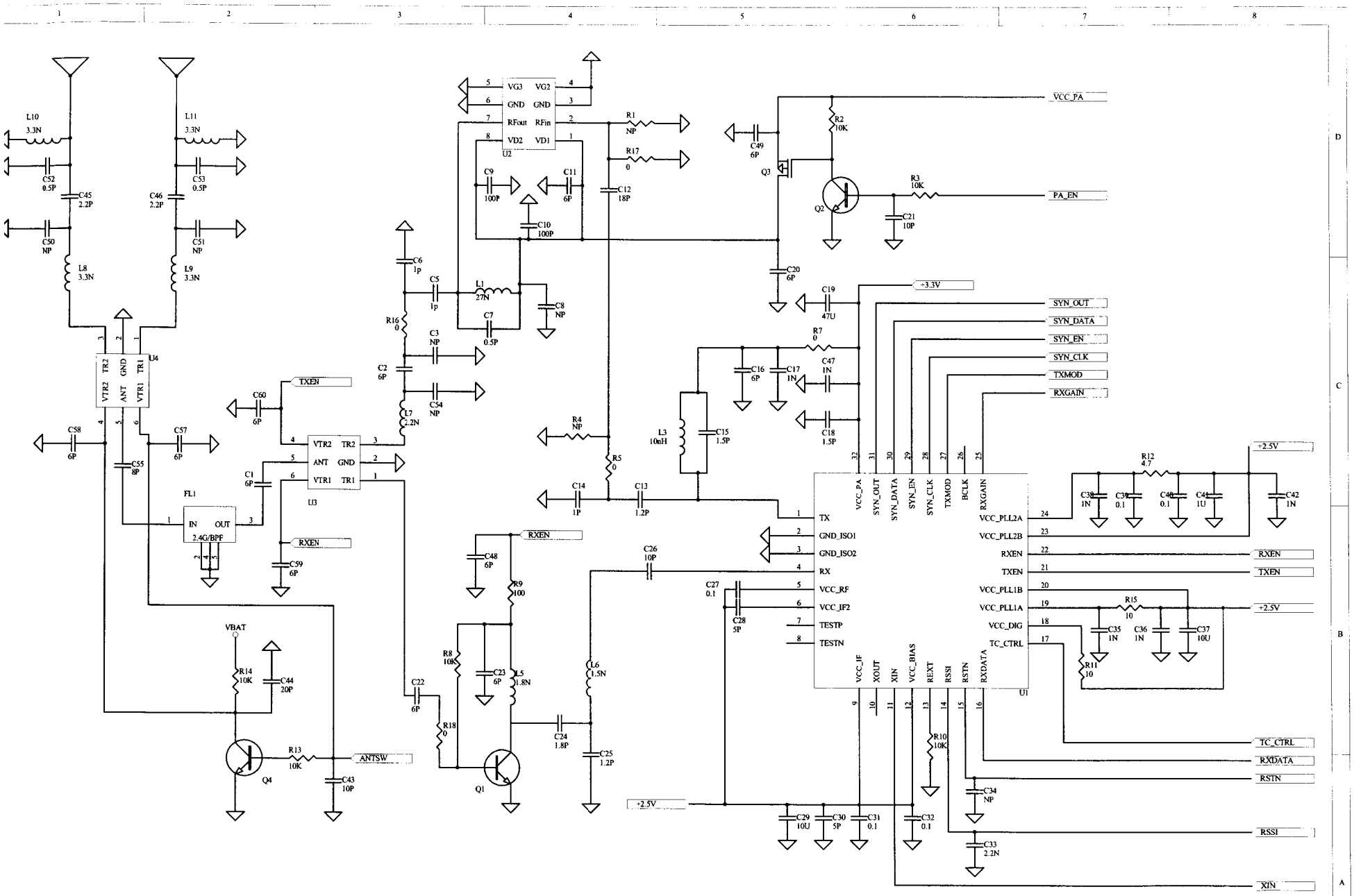

FCC ID: G9H2-1115A
Marstech Report No. 23339D
EXHIBIT C(2)-3

Title	21115 RF SCHEMATIC	
Size A3	Number 613-021828	Revision R3
Date: 24-Sep-2003	Sheet of 1	
File: D:\SCH..\21115RF-Schematic.sch	Drawn By: C.C.CHOU	