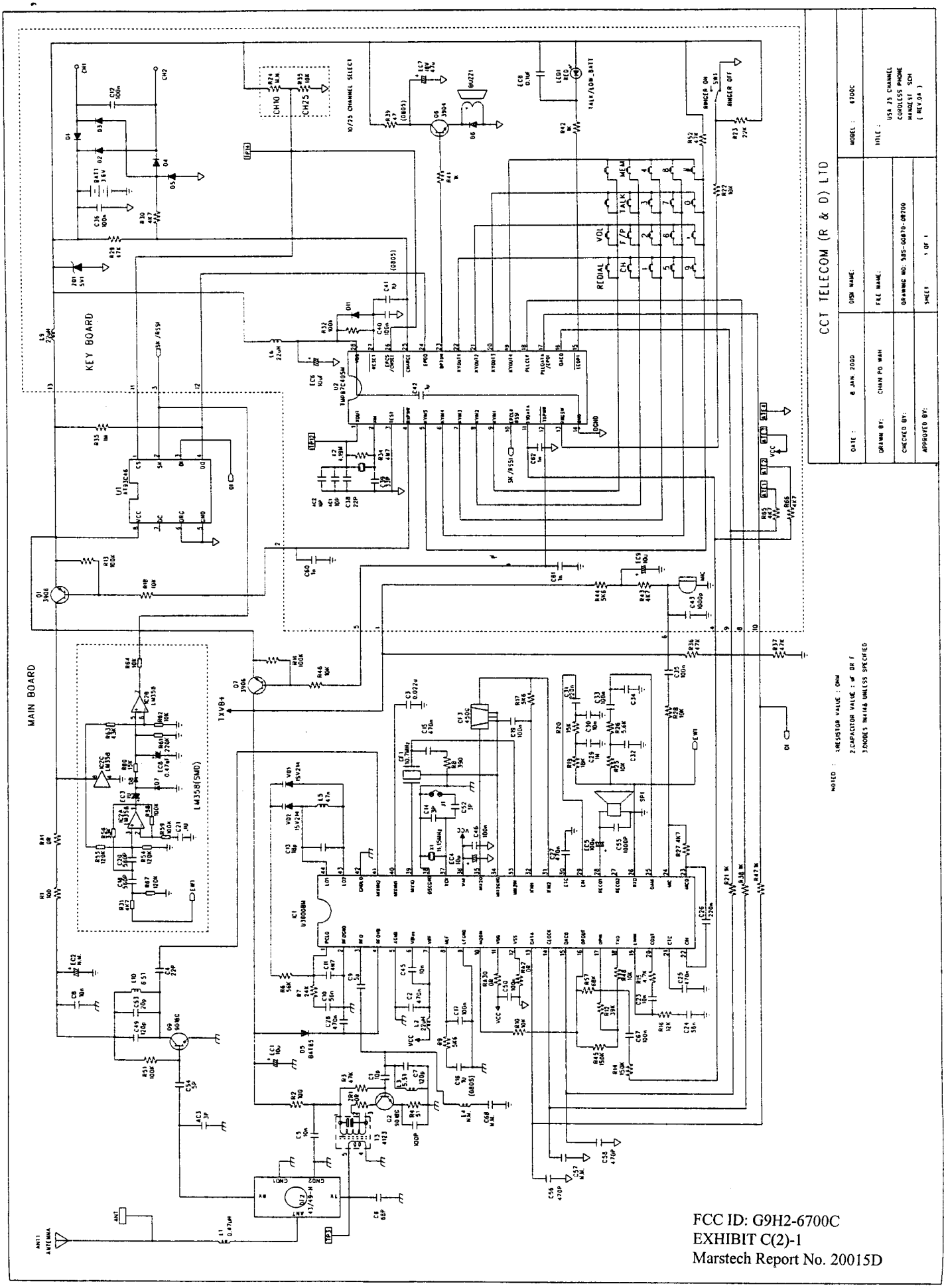

FCC ID: G9H2-6700C
EXHIBIT C(2)-1
Marstech Report No. 20015D

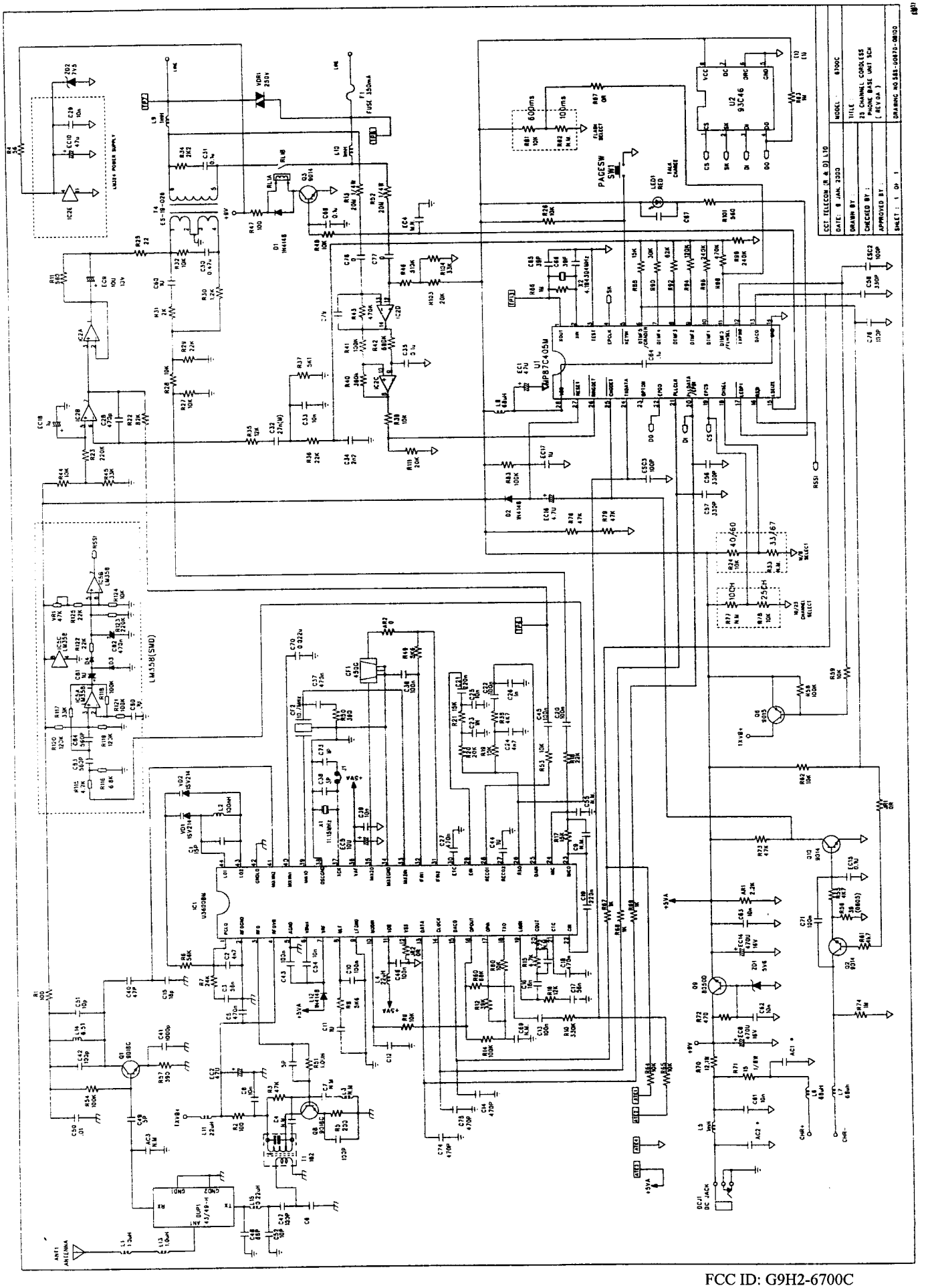

FCC ID: G9H2-6700C
EXHIBIT C(2)-2
Marstech Report No. 20015D