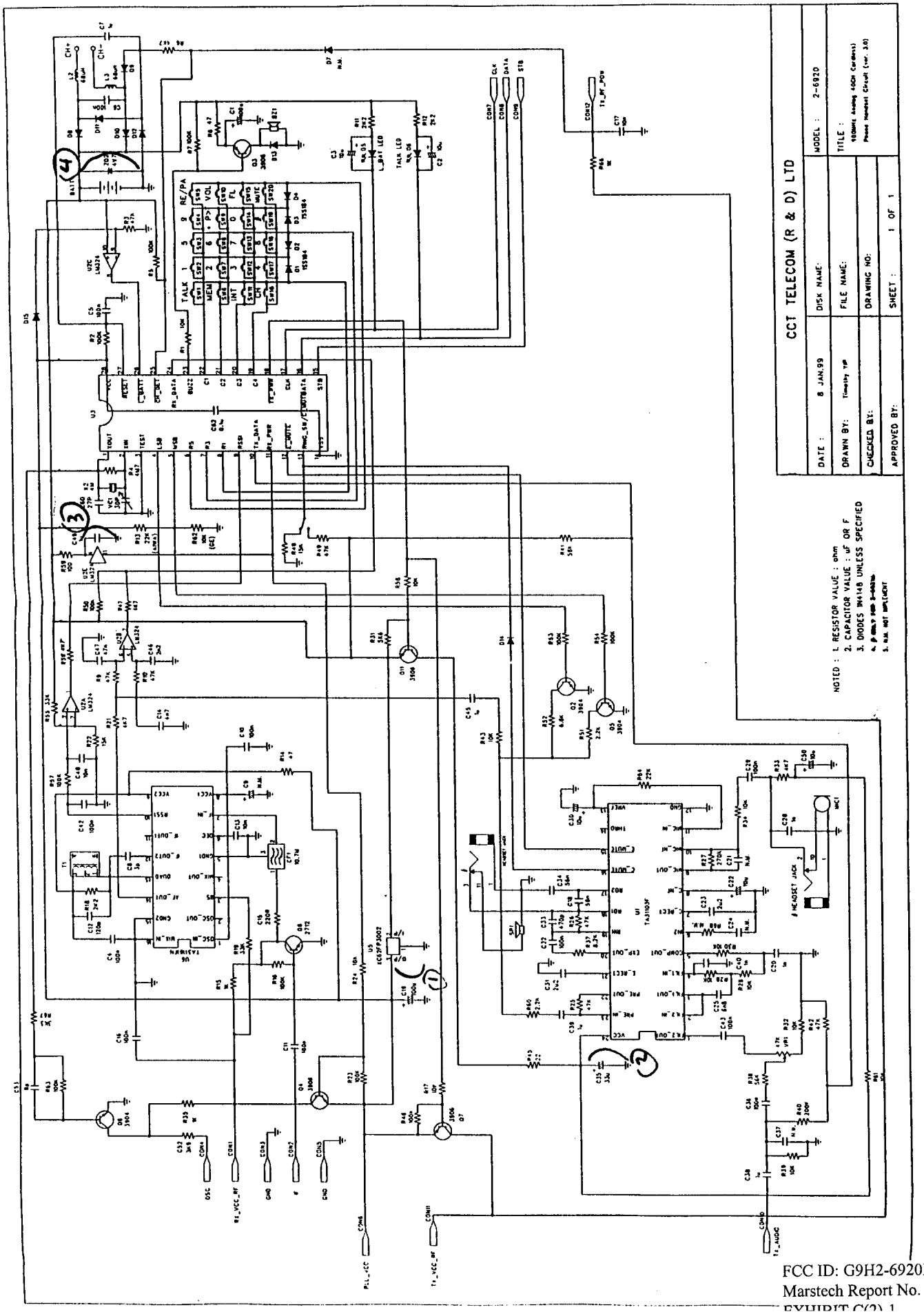


FCC ID: G9H2-6920M
Marstech Report No. 98540D
EXHIBIT C(2) 1

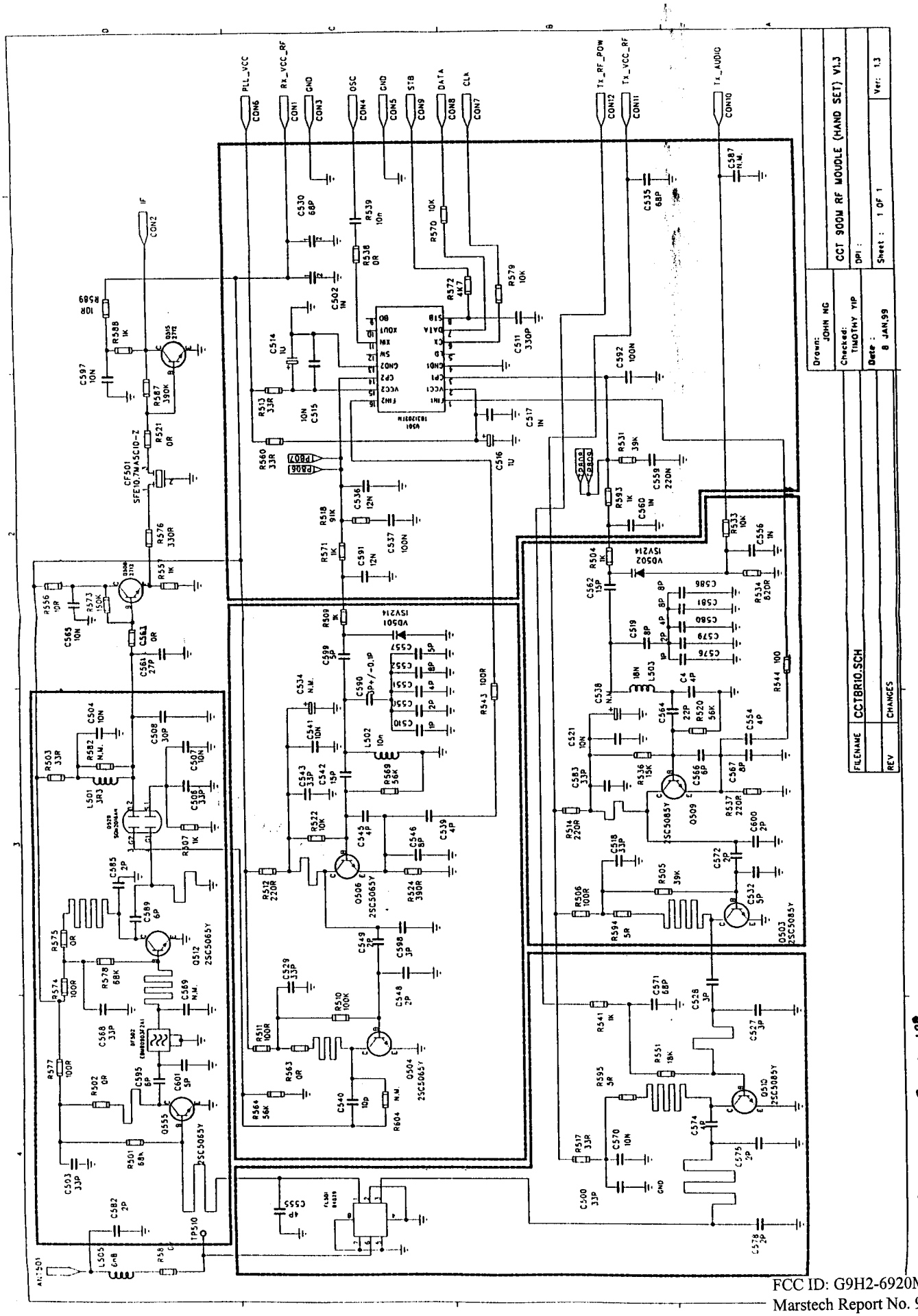


FCC ID: G9H2-6920M
Marstech Report No. 98540D
EXHIBIT C(2) 2

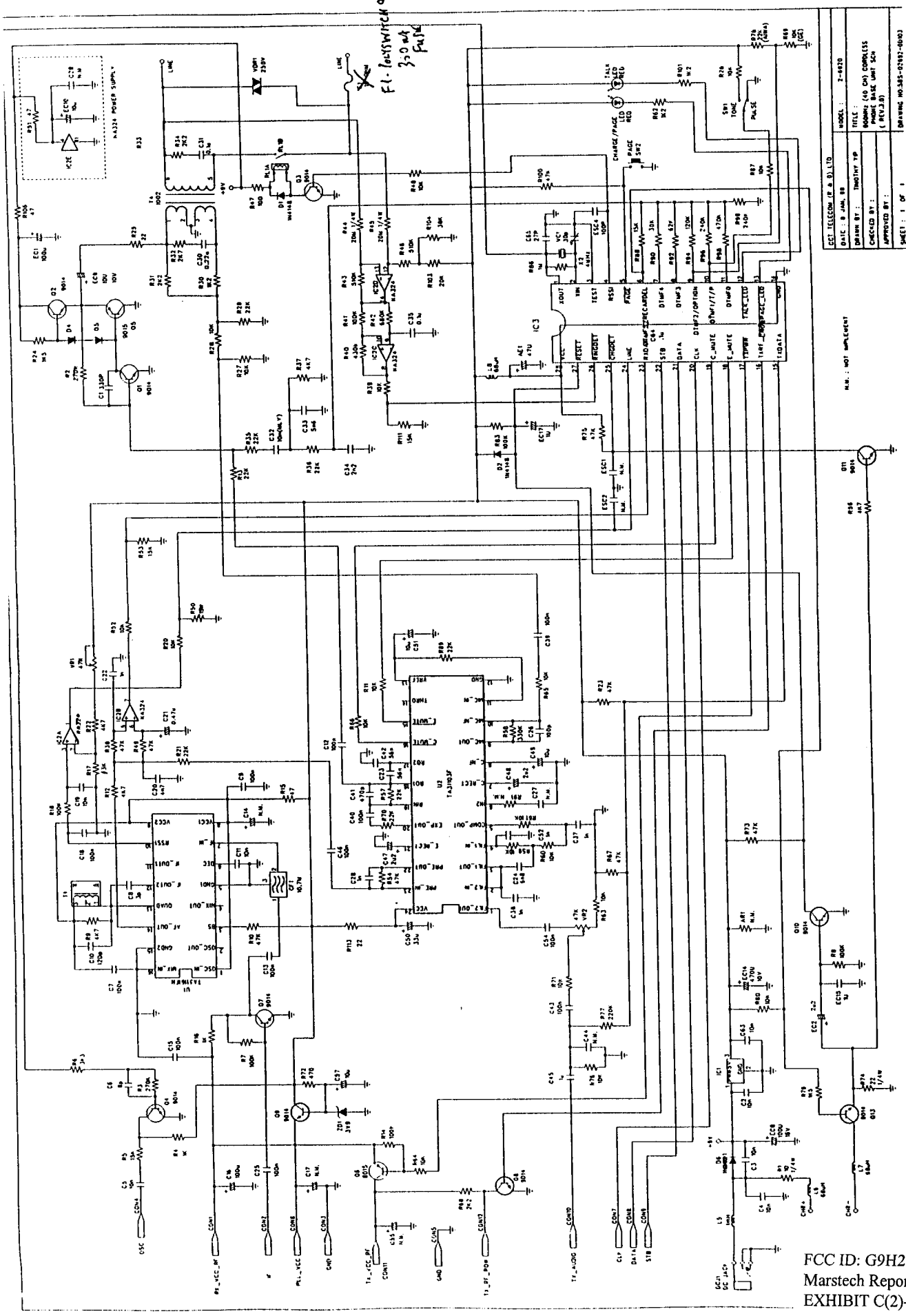


FCC ID: G9H2-6920M
Marstech Report No. 98540D
EXHIBIT C(2)-3

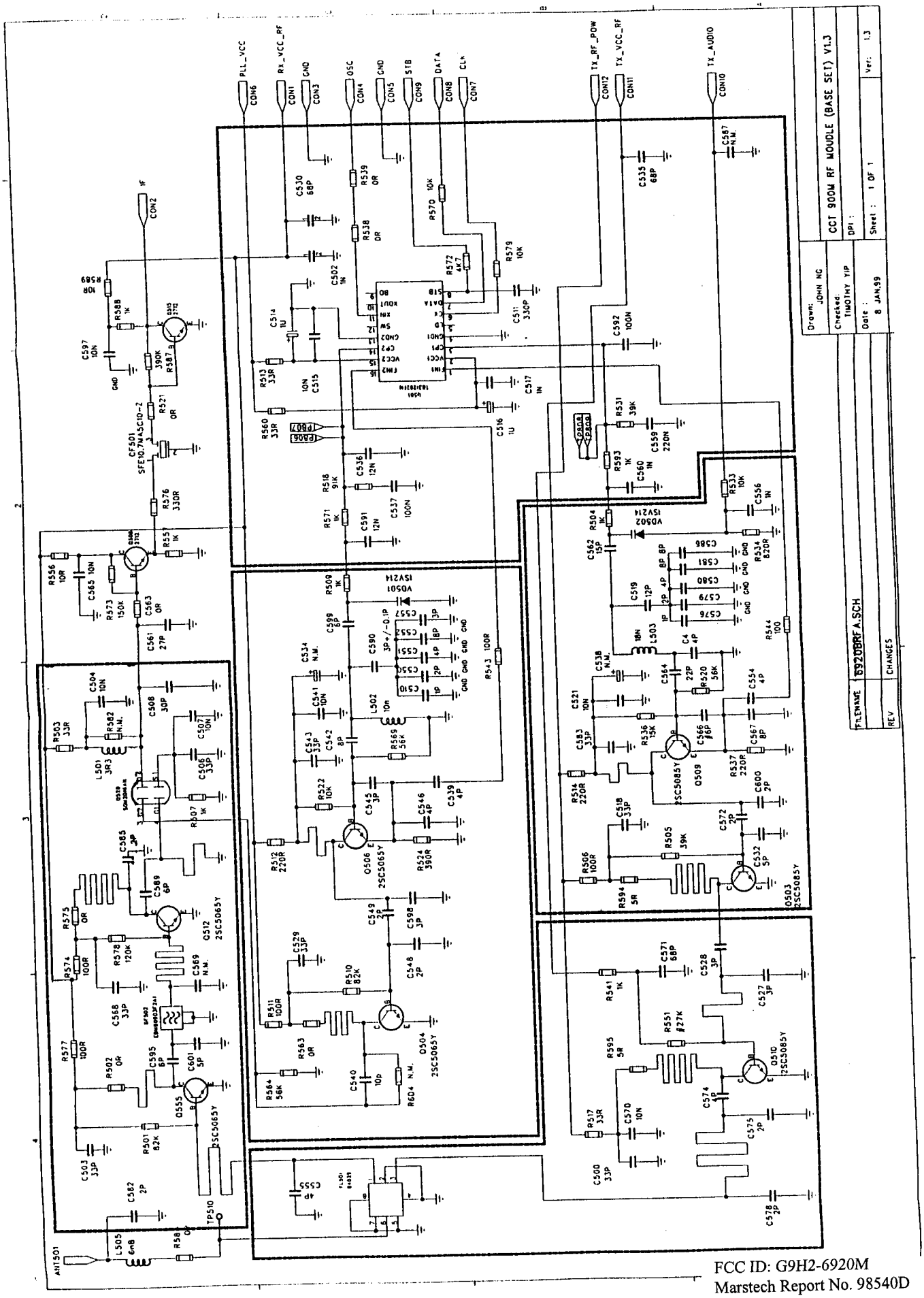


FCC ID: G9H2-6920M
Marstech Report No. 98540D
EXHIBIT C(2)-4