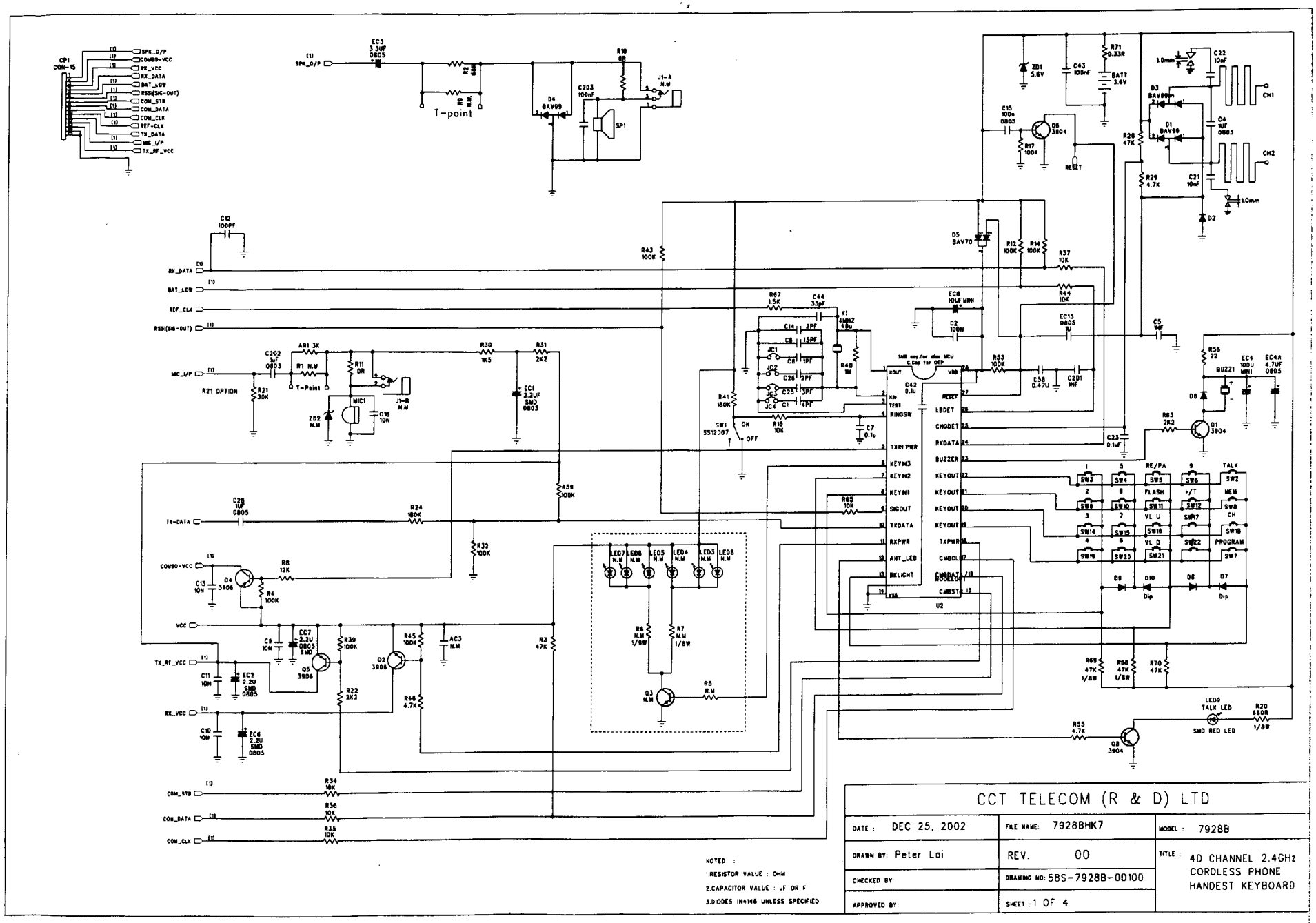


FCC ID: G9H2-7928B
Marstech Report No. 23064D
EXHIBIT C(2)-1

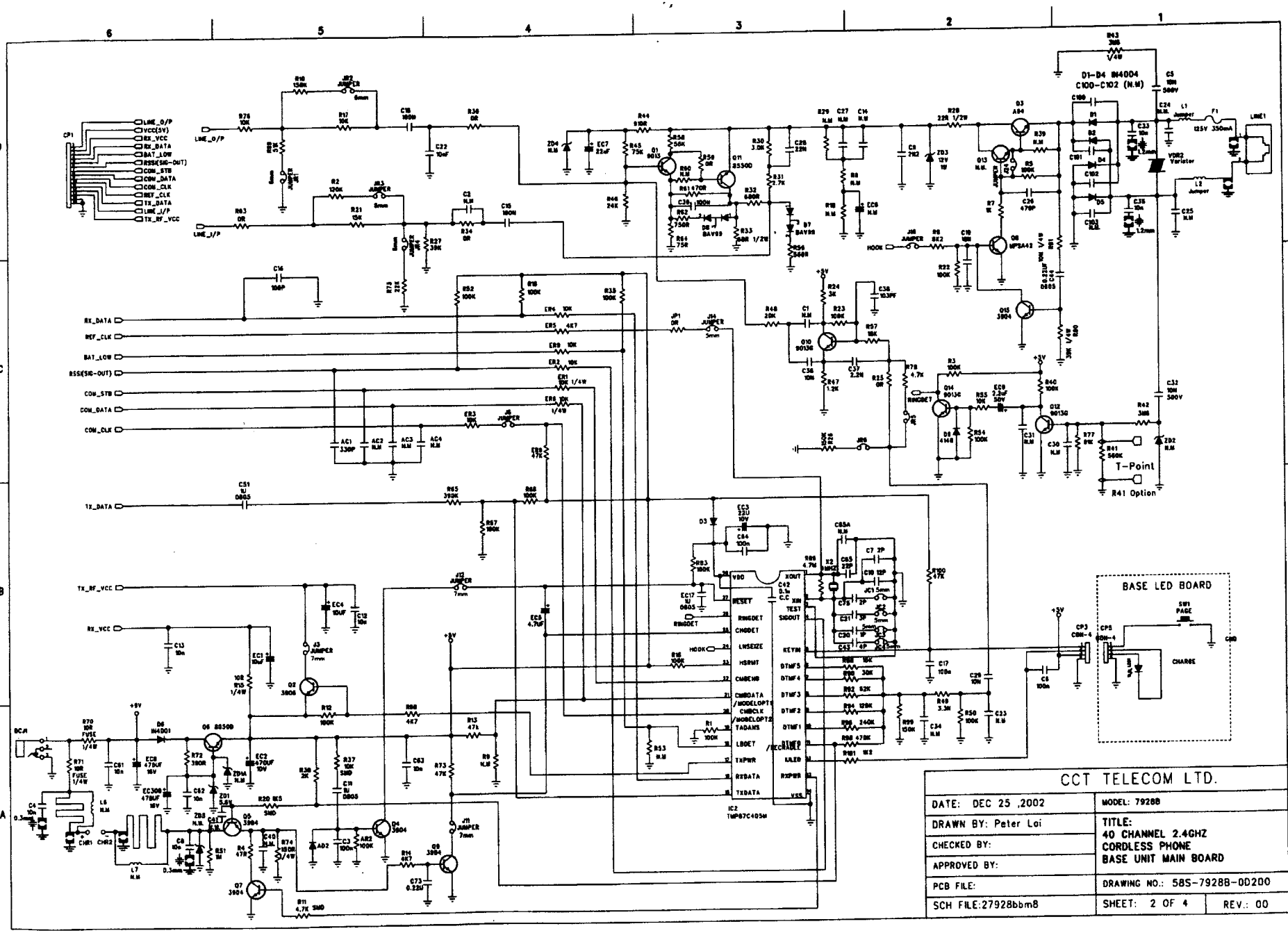


FCC ID: G9H2-7928B
Marstech Report No. 23064D
EXHIBIT C(2)-2

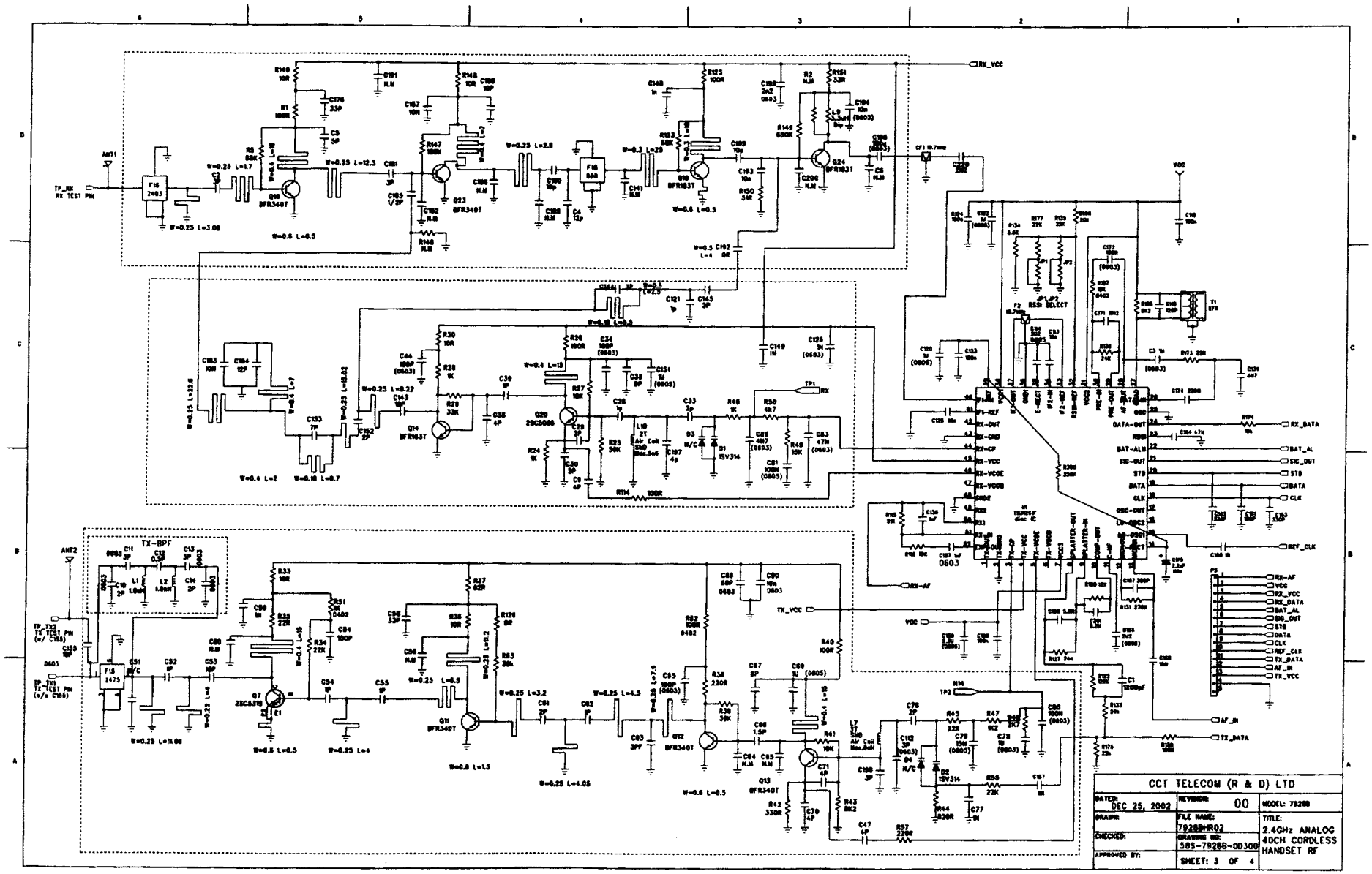


FCC ID: G9H2-7928B
Marstech Report No. 23064D
EXHIBIT C(2)-3

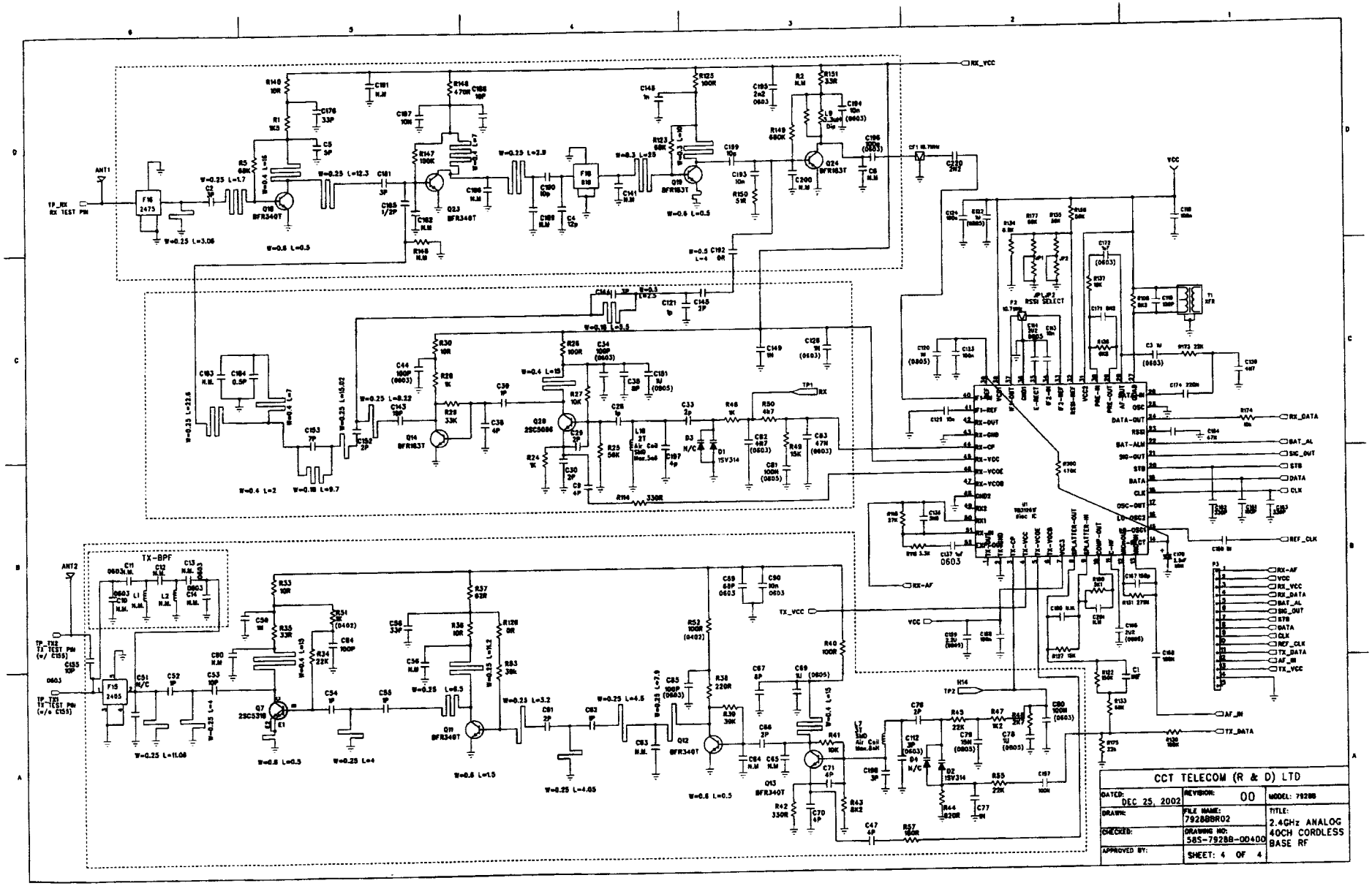


FCC ID: G9H2-7928B
Marstech Report No. 23064D
EXHIBIT C(2)-4