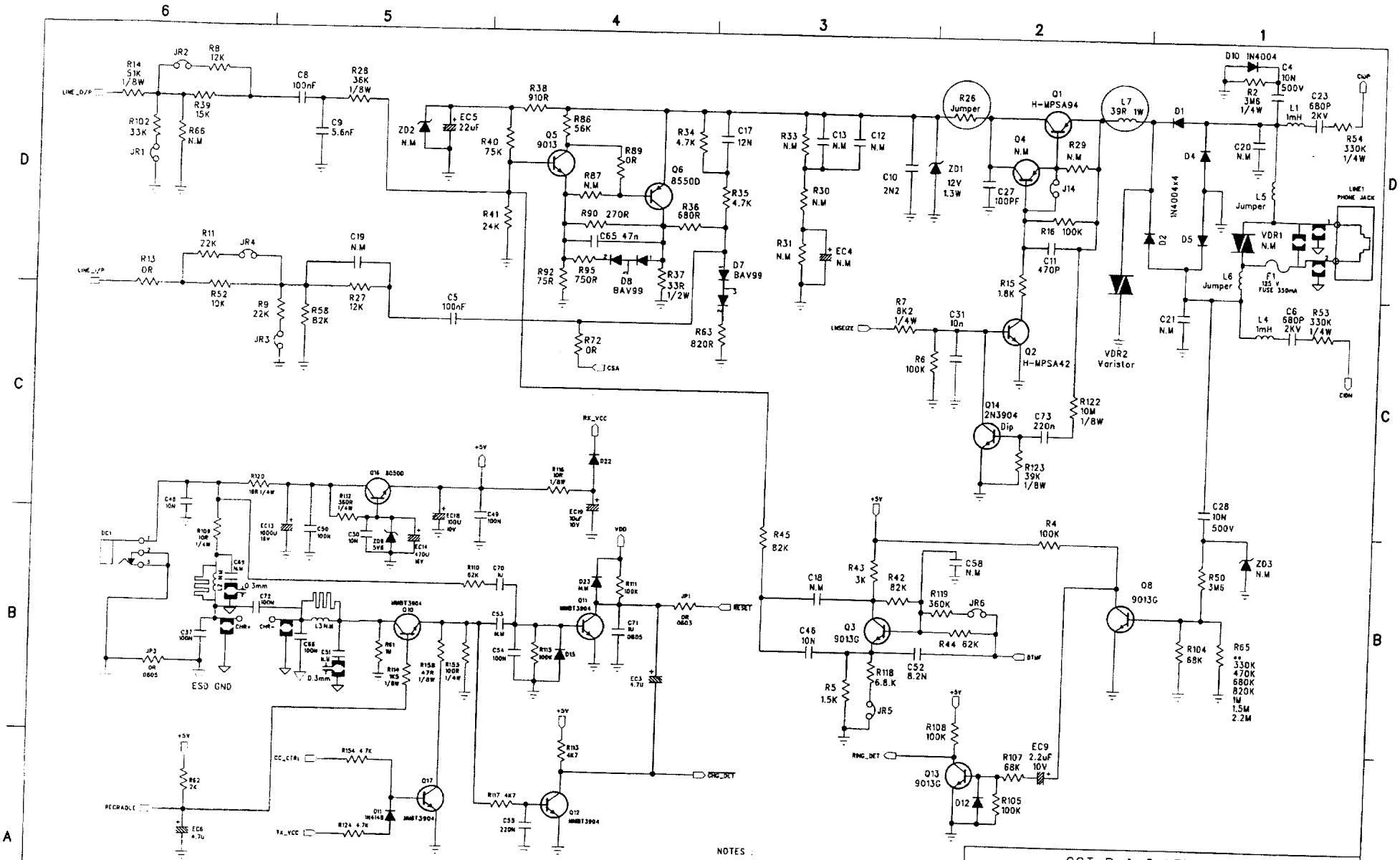

STAGE	PCB FILE NAME	PCB P/N
SSR1	2392011A.JOB	340-23928-10010
CA1	2392011A.JOB	340-23928-10010

NOTES :

1. SAFETY COMPONENTS
2. RESISTOR VALUE : OHM
3. CAPACITOR VALUE : uF OR F
4. DIODE : IN4148 UNLESS SPECIFIED
5. N.M : NOT MOUNT

CCT R & D LTD.		
DATE:	MODEL: 7938C	
DRAWN BY: H.S.Y.	TITLE: BASE UNIT 40CH 900M/2.4GHz CORDLESSPHONE	
CHECKED BY:		
APPROVED BY:		
PCB NO.:	DRAWING NO.: 58S-7938C-0030A	
PAGE : 3 of 6	File Name:	REV.: 0A

FCC ID: G9H2-7938C
Marstech Report No. 23401D
EXHIBIT C(2)-1

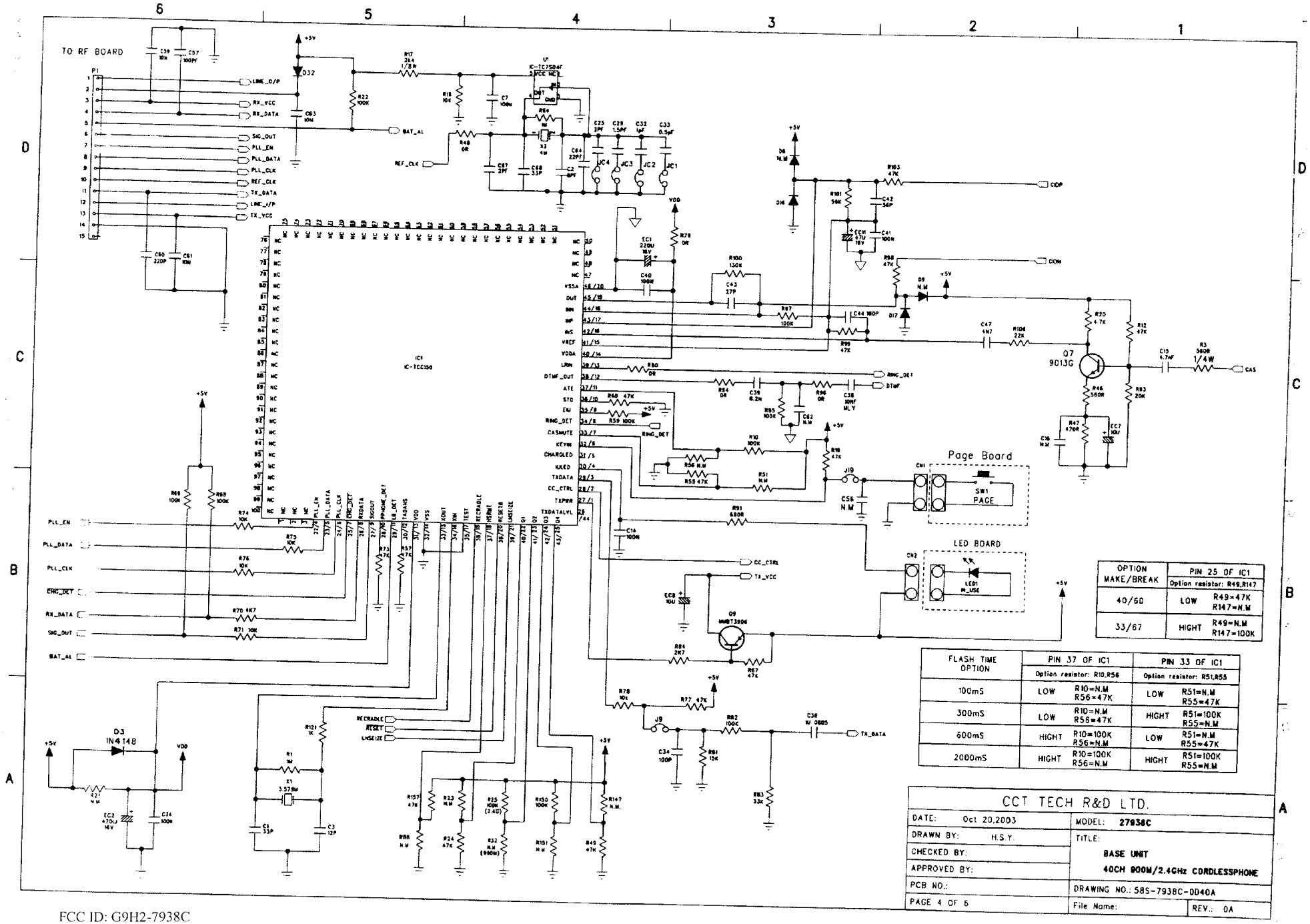

OPTION MAKE/BREAK	PIN 25 OF IC1	
	Option resistor: R49,R147	
40/60	LOW	R49=47K R147=N.M
33/67	HIGHT	R49=N.M R147=100K

FLASH TIME OPTION	PIN 37 OF IC1		PIN 33 OF IC1	
	Option resistor: R10,R56		Option resistor: R51,R55	
100mS	LOW	R10=N.M R56=47K	LOW	R51=N.M R55=47K
300mS	LOW	R10=N.M R56=47K	HIGHT	R51=100K R55=N.M
600mS	HIGHT	R10=100K R56=N.M	LOW	R51=N.M R55=47K
2000mS	HIGHT	R10=100K R56=N.M	HIGHT	R51=100K R55=N.M

CCT TECH R&D LTD.		
DATE: Oct 20,2003	MODEL: 27938C	
DRAWN BY: H.S.Y.	TITLE: BASE UNIT 40CH 900M/2.4GHz CORDLESSPHONE	
CHECKED BY:		
APPROVED BY:		
PCB NO.:	DRAWING NO.: 58S-7938C-0D40A	
PAGE 4 OF 6	File Name:	REV.: 0A

FCC ID: G9H2-7938C
Marstech Report No. 23401D
EXHIBIT C(2)-2

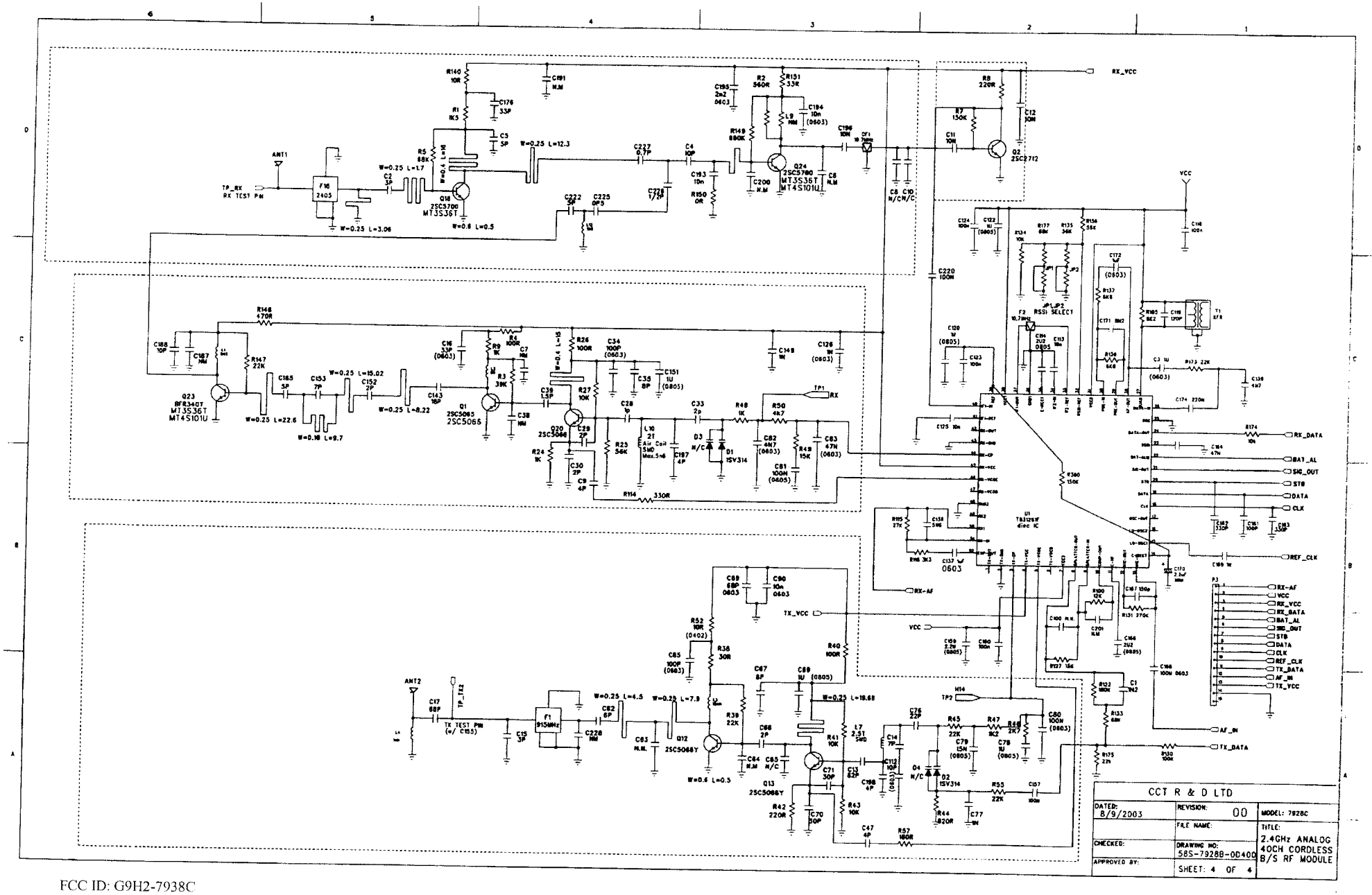

FCC ID: G9H2-7938C
Marstech Report No. 23401D
EXHIBIT C(2)-3