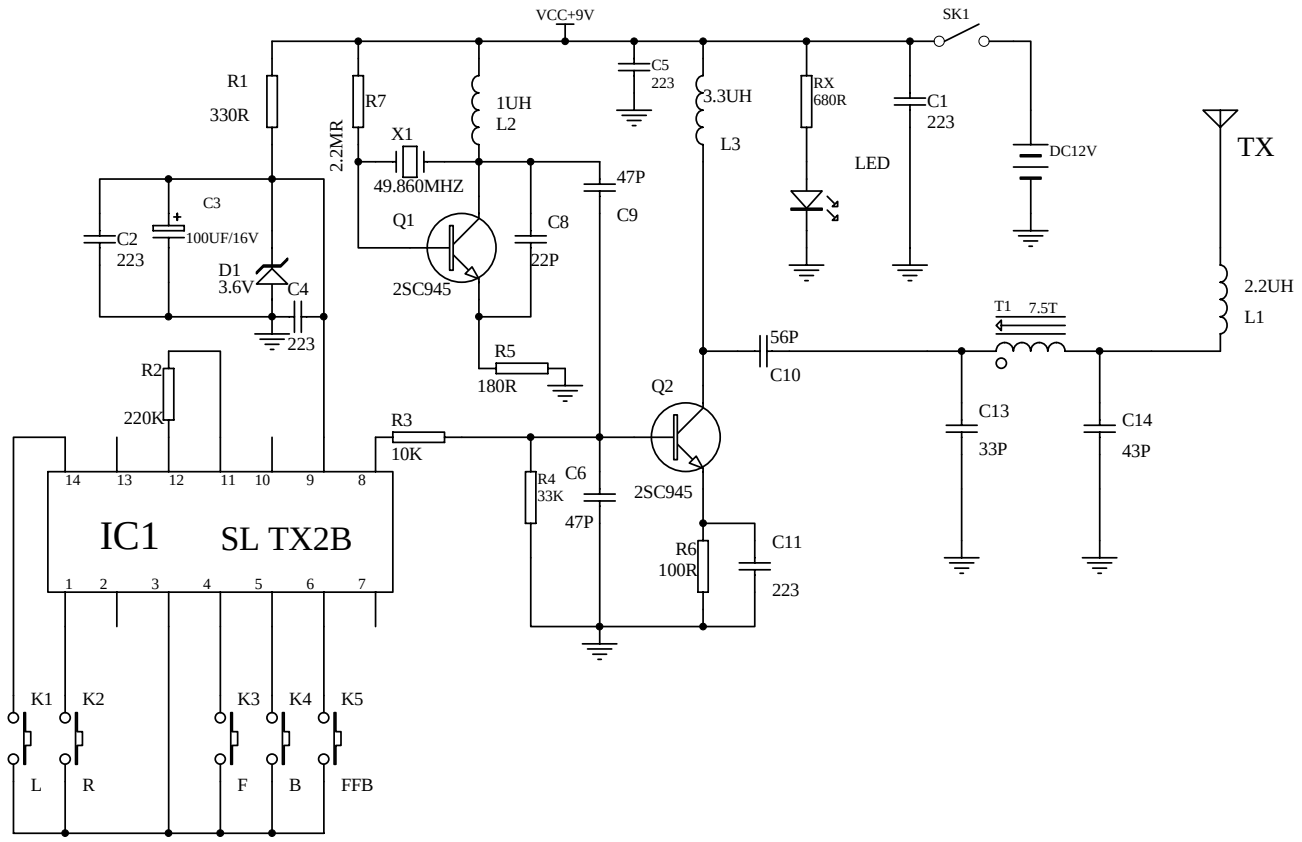

Title	经纬实业有限公司	
Size A4	Number GK-766A原理图	Revision SongGuangCheng
Date: 17-Jun-2004		Sheet of
File: E:\pcb\原理图\GK-768ASH.DDB		Drawn By: