ENGINEERING SPECIFICATION	SECURITY NOTATION	SPEC NO. IT7026201	A
		CAGE CODE 55939	REV LTR
	THIS TITLE PAGE CONTAINS PROPRIETARY AND DATA RIGHTS NOTATIONS.		

DOCUMENT TYPE	CLASS	INITIAL RELEASE DATE
INTEGRATED TEST SPECIFICATION	A	MAR 02 2002

DIVISION	DEPARTMENT NO.	PRODUCT LINE NO.	CONTRACT NO.
AES – BELL RD.	450480	3823	

TITLE

INTEGRATED TEST SPECIFICATION FOR THE VHF DATA RADIO TR-86X, PART NO. 7026201

PREPARED BY:	DATE	APPROVED BY TECHNICAL MANAGER	DATE	APPROVED BY ENGINEERING DEPARTMENT MANAGER	DATE
M. Howk	2/26/02	J. Schneider	2/26/02		
APPROVED FOR SCM	DATE	APPROVED FOR SQA	DATE	APPROVED BY:	DATE

REF AWAEB/PSAEB NO.	CHECKER	PRODUCT DESIGN CHECKER (FOR REF, SPCL CONT PER EPM 1-A-40)	COGNIZANCE OF QE SUPVR (FOR REF, SPCL CONT PER EPM 1-A-40)

FOR PAGE INDEX, SEE PAGE CR-2. REVISION RECORD FOLLOWS PAGE INDEX.

THIS IS AN ELECTRONIC FACSIMILE OF THE ORIGINAL CR-1 ON FILE WITH DOCUMENT CONTROL.

PROPRIETARY NOTICE

THIS DOCUMENT AND THE INFORMATION DISCLOSED HEREIN ARE PROPRIETARY DATA OF HONEYWELL INTERNATIONAL INC. NEITHER THIS DOCUMENT NOR THE INFORMATION CONTAINED HEREIN SHALL BE REPRODUCED, USED, OR DISCLOSED TO OTHERS WITHOUT THE WRITTEN AUTHORIZATION OF HONEYWELL INTERNATIONAL INC.

NOTICE

FREEDOM OF INFORMATION ACT (5 USC 552) AND DISCLOSURE OF CONFIDENCE INFORMATION GENERALLY (18 USC 1905)

THIS DOCUMENT IS BEING FURNISHED IN CONFIDENCE BY HONEYWELL INTERNATIONAL INC. THE INFORMATION DISCLOSED HEREIN FALLS WITHIN EXEMPTION (b) (4) OF 5 USC 552 AND THE PROHIBITIONS OF 18 USC 1905.

Copyright 2002 HONEYWELL INTERNATIONAL INC.
All Rights Reserved

Honeywell	AW/CRITICAL NOTATION		
	SECURITY NOTATION	TITLE PAGE	CR-1 PAGE

ENGINEERING SPECIFICATION	SECURITY NOTATION	SPEC NO. IT7026201	A
		CAGE CODE 55939	REV LTR

SEE THE TITLE PAGE FOR PROPRIETARY AND DATA RIGHTS NOTATIONS.

THE LATEST REVISION OF EACH SHEET IS INDICATED ON THE PAGE INDEX.

Page	Rev Ltr	Page	Rev Ltr	Page	Rev Ltr	Page	Rev Ltr	Page	Rev Ltr
Title		32	-	77	-	C-7	-		
CR-1	A	33	A	78	-	C-8	-		
		34	-	79	-				
Page		35	-	80	-	Appendix D			
Index		36	-	81	-	D-0	A		
CR-2	A	37	-	82	-	D-1	A		
		38	-	83	-	D-2	A		
Revision		39	-	84	-	D-3	A		
Record		40	-	85	-	D-4	A		
CR-3	A	41	-	86	-	D-5	A		
Table of		42	-	87	-	D-6	A		
Contents		43	-	88	-	D-7	A		
i	-	44	-	89	A	D-8	A		
		45	-	90	-	TOTAL			
1	-	46	-	91	-	PAGES:	131		
2	-	47	-	92	-				
3	-	48	A	93	A				
4	-	49	-	94	-				
5	-	50	A	95	-				
6	-	51	-	96	-				
7	-	52	-	97	A				
8	-	53	A	98	A				
9	A	54	-	99	A				
10	A	55	-	100	-				
11	-	56	-						
12	-	57	-	Appendix A					
13	-	58	-	A-0	-				
14	-	59	-	A-1	-				
15	-	60	A						
16	-	61	-	Appendix B					
17	-	62	-	B-0	-				
18	-	63	-	B-1	-				
19	-	64	-	B-2	-				
20	-	65	-	B-3	-				
21	A	66	-	B-4	-				
22	A	67	-	B-5	-				
23	-	68	-	B-6	-				
24	A	69	-						
25	A	70	-	Appendix C					
26	A	71	-	C-0	-				
27	-	72	-	C-1	-				
28	A	73	A	C-2	-				
29	A	74	-	C-3	-				
30	-	75	-	C-4	A				
31	A	76	-	C-5	A				
				C-6	-				

Honeywell	AW/CRITICAL NOTATION		
	SECURITY NOTATION	PAGE INDEX	CR-2 PAGE

ENGINEERING SPECIFICATION	SECURITY NOTATION	SPEC NO. IT7026201	A
		CAGE CODE 55939	REV LTR
	SEE THE TITLE PAGE FOR PROPRIETARY AND DATA RIGHTS NOTATIONS.		

REV LTR	PAGE	DESCRIPTION	DATE AND APPROVAL
A	SEE PAGE INDEX SHEET CR-2	C.O. 200200797A (NA)	Max Hood 3 APR 02

Honeywell	AW/CRITICAL NOTATION		
	SECURITY NOTATION	REVISION RECORDS	CR-3 PAGE

TABLE OF CONTENTS

Title **Page**

1. SCOPE 1
2. REFERENCE DOCUMENTS 1
   - 2.1 ASSEMBLY PRINTS 1
   - 2.2 BLOCK AND SIGNAL BLOCK DIAGRAMS 2
   - 2.3 PRODUCT SPECIFICATION 7
   - 2.4 GOVERNING DOCUMENTS 7
3. GENERAL INFORMATION 8
4. POWER REQUIREMENTS 10
5. TEST EQUIPMENT OR EQUIVALENT 10
   - 5.1 ALTERNATE TEST EQUIPMENT 10
   - 5.2 TEST SOFTWARE 10
6. TEST SETUP 11
   - 6.1 INITIAL SETUP 11
   - 6.2 TEST SETUP #1 12
   - 6.3 TEST SETUP #2 12
   - 6.4 TEST SETUP # 3 12
7. TEST REQUIREMENTS 17

APPENDIX A CALIBRATION TR-86X A-0

APPENDIX B CALIBRATION TR-86X B-0

APPENDIX C QUALITY CONTROL FUNCTIONAL TEST REPORT C-0

TITLE: **INTEGRATED TEST SPECIFICATION FOR THE TR-86X VHF DATA RADIO, PART NO. 7026201**

1. SCOPE

This Integrated Test Specification establishes the manufacturing and operational requirements that the VDR, TR-**86X** must meet to ensure that the units are in proper operating condition.

This specification also contains detailed test procedures, which apply to the test equipment listed in paragraph 5.

2. REFERENCE DOCUMENTS

These reference documents are not required for performance of the test procedure. However, these documents provide an aid for troubleshooting should any discrepancies occur during performance of the test procedure. They are also useful for the development of test equipment and test procedures.

2.1 Assembly Prints

Final Assembly	7026201
CPU/PS	7026230-90X
I/O	7026232-90X
VHF RECEIVER	7026234-90X
VHF TRANSMITTER	7026236-90X

2.2 Block and Signal Block Diagrams

2.2.1 VDR Test Block Diagram

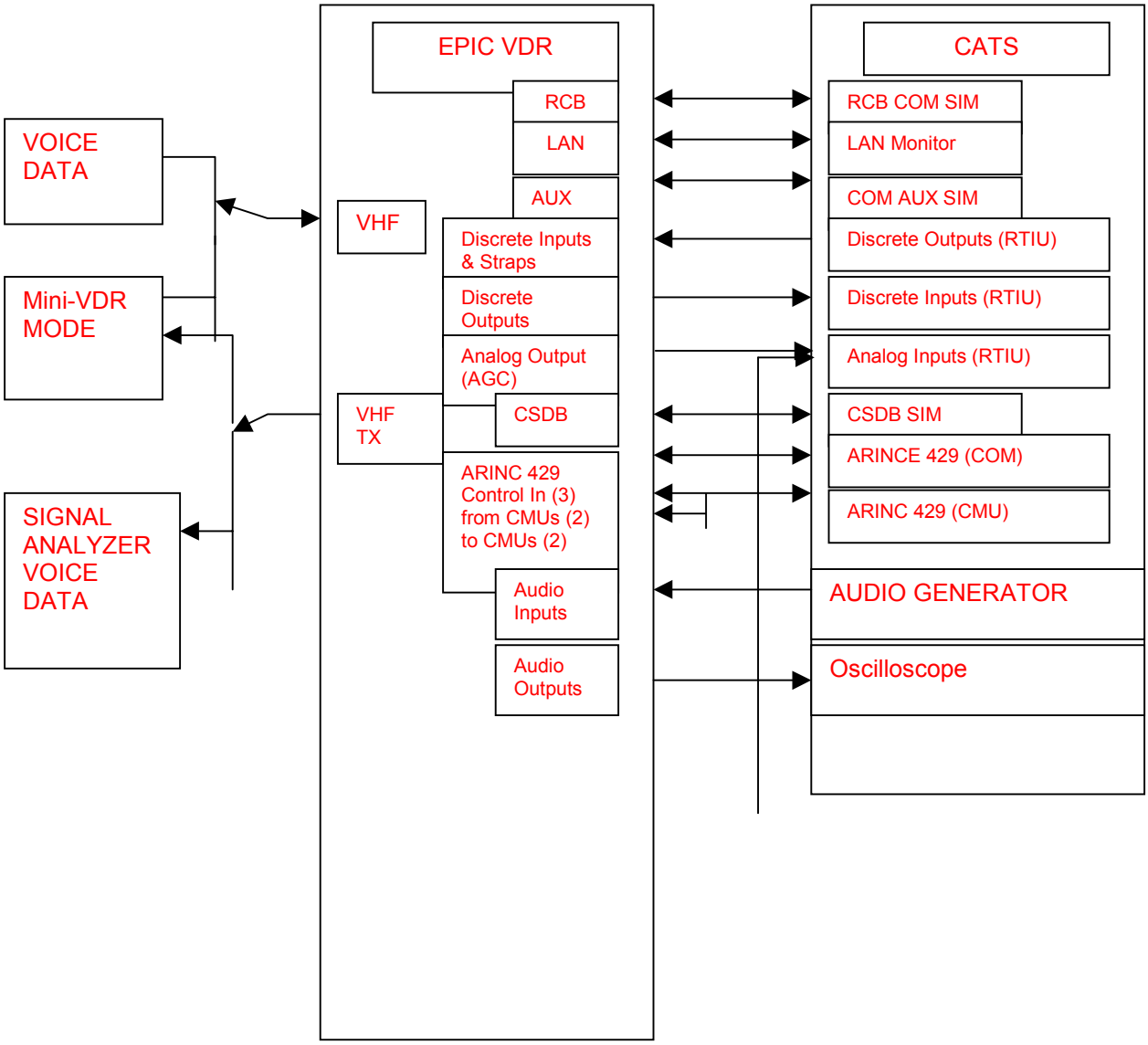

2.2.2 EPIC VDR Signal & Pin Assignment

The external interfaces for the EPIC VDR LRM will be pinned as specified in the following table. This connector is a 78 pin D subminiature connector that mates inside the EPIC MRC.

Table 1-2: External Interface Pin Definitions for the EPIC VDR LRM

SIGNAL NAME	SIGNAL DESCRIPTION	I/O TYPE	VDR LRM PIN #
FAN CONTROL	CONTROL FOR BOTH FANS	DISCRETE INPUT	01
MICROPHONE HI	MICROPHONE AUDIO INPUT HI	AUDIO INPUT	02
GND	GROUNDED INTERNALLY	GND	03
SPARE 11 DISCRETE INPUT	WAS LAN ENABLE	DISCRETE INPUT	04
NAV/COM PHONE AUDIO LO	NAV or COM HEADPHONE-AUDIO-LO	AUDIO OUTPUT	05
NAV/COM AUX-DATA+	RS-422 AUX DATA BUS FROM CD	BUS INPUT	06
SIDE-TONE-PHONE AUDIO	TX SIDETONE HEADPHONE AUDIO	AUDIO OUTPUT	07
TUNE/TEST INHIBIT	TUNE/TEST INHIBITED WHEN GROUNDED	DISCRETE INPUT	08
RCB-RTN	GROUNDED INTERNALLY	GND	09
RCB-RX DATA	RCB DATA INPUT	BUS INPUT	10
RCB TX DATA	RCB DATA BUS OUTPUT	BUS OUTPUT	11
RS-422 OUT PORT 1B	CSDB DATA OUT 1B (LO)	BUS OUTPUT	12
RS-422 OUT PORT 1A	CSDB DATA OUT 1A (HI)	BUS OUTPUT	13
VOICE/DATA SEL	DISCRETE (ACTIVE), DATA = GND	DISCRETE INPUT	14
DATA-KEY	DISCRETE (ACTIVE), KEY = GND	DISCRETE INPUT	15
A429 FREQ/FUNC SEL IN PORT 2B	ARINC 429 LS BUS (CONTROL)	BUS INPUT	16
A429 FREQ/FUNC SEL IN PORT 1A	ARINC 429 LS BUS (CONTROL)	BUS INPUT	17
POWER GND	GROUNDED INTERNALLY	GND	18
SPARE 1 DISCRETE INPUT	Resvd for PS SYNC	DISCRETE INPUT	19
+28V POWER IN	+28 VDC POWER	POWER INPUT	20
FAN #1 MONITOR	Fan #1 Monitor Pulsed Input	DISCRETE INPUT	21
MICROPHONE LO	MICROPHONE AUDIO INPUT LO	AUDIO INPUT	22
POWER ON/OFF	DISCRETE (ACTIVE)	DISCRETE INPUT	23
MIC PTT	DISCRETE (ACTIVE)	DISCRETE INPUT	24
NAV/COM PHONE AUDIO HI	NAV or COM HEADPHONE-AUDIO-HI	AUDIO OUTPUT	25
NAV/COM AUX-DATA-	RS-422 AUX DATA BUS FROM CD	BUS INPUT	26
REC-PHONE AUDIO	RECEIVER HEADPHONE AUDIO	AUDIO OUTPUT	27
VDR-EMERG SEL	DISCRETE (ACTIVE)	DISCRETE INPUT	28
SPARE 2	SPARE was COM EXTENDED-FREQ-EN	OPEN	29
MKR AUDIO LO	MARKER AUDIO Output Low	AUDIO OUTPUT	30
MKR AUDIO HI	MARKER AUDIO Output High	AUDIO OUTPUT	31
SYS-POSITION-MS-BIT	DISCRETE (STRAP)	STRAP INPUT	32
SYS-POSITION-LS-BIT	DISCRETE (STRAP)	STRAP INPUT	33
VOICE/DATA STATUS (or BURN IN TEST FAIL)	DISCRETE (OPEN=V, GND=D)	DISCRETE OUTPUT	34
A429 FREQ/FUNC SEL IN PORT 2A	ARINC 429 LS BUS (CONTROL)	BUS INPUT	35
A429 FREQ/FUNC SEL IN PORT 1B	ARINC 429 HS BUS (CONTROL)	BUS INPUT	36
POWER GND	GROUNDED INTERNALLY	GND	37
SPARE 3 DISCRETE INPUT	SPARE DISCRETE INPUT	DISCRETE INPUT	38
+28V POWER IN	+28 VDC POWER	POWER INPUT	39
FAN #2 MONITOR	Fan #2 Monitor Pulsed Input	DISCRETE INPUT	40

SIGNAL NAME	SIGNAL DESCRIPTION	I/O TYPE	VDR LRM PIN #
LAN RX-	10 BASE T LAN RECEIVER	BUS INPUT	41
SIMULCOM	DISCRETE (ACTIVE)	DISCRETE O & I	42
A429 IN PORT 1/2 SEL	DISCRETE (ACTIVE)	DISCRETE INPUT	43
A429 BURST-TUNE-ENABLE	DISCRETE (STRAP)	STRAP INPUT	44
RNAV VIDEO	CODEC TEST OUTPUT (was CHAN-ANTI-BLOCKING-EN)	AUDIO OUTPUT	45
RX-AUDIO-COMP-DIS	DISCRETE (STRAP)	STRAP INPUT	46
GND	GROUNDED INTERNALLY (was TX-TIME-OUT-PERIOD-SEL)	GROUNDED INTERNALLY	47
SPARE 4 DISCRETE INPUT	RESERVED in MRC COM SLOT	DISCRETE INPUT	48
SPARE 5	RESERVED in MRC COM SLOT	OPEN	49
SPARE 6	RESERVED in MRC COM SLOT	OPEN	50
ACARS-DATA-IN-LO	AUDIO DATA (MSK)	AUDIO INPUT	51
LAN RX+	10 BASE T LAN RECEIVER	BUS INPUT	52
LAN TX+	10 BASE T LAN TRANSMITTER	BUS OUTPUT	53
LAN TX-	10 BASE T LAN TRANSMITTER	BUS OUTPUT	54
A429 FREQ/FUNC SEL IN PORT 3B or RS-422 CSDB IN PORT B	ARINC 429 LS BUS (CONTROL) or CSDB NAV or COM CDU bus	BUS INPUT	55
A429 FREQ/FUNC SEL IN PORT 3A or RS-422 CSDB IN PORT A	ARINC 429 LS BUS (CONTROL) or CSDB NAV or COM CDU bus	BUS INPUT	56
POWER GND	GROUNDED INTERNALLY	GND	57
SPARE 7	SPARE	OPEN	58
+28V POWER IN	+28 VDC POWER	POWER INPUT	59
FAN SUPPLY	28VDC Fan supply		60
SPARE 8 DISCRETE INPUT	DISCRETE INPUT was AUDIO RTN	DISCRETE INPUT	61
NAV/COM-AUDIO	Low level audio to the NIM	AUDIO OUTPUT	62
COM AUDIO-EN	COM audio enabled	DISCRETE OUTPUT	63
VDR TRANSMIT	DISCRETE	DISCRETE OUTPUT	64
VHF AGC	VHF AGC ANALOG VOLTAGE (RSSI)	ANALOG OUTPUT	65
SELCAL/ACARS-RTN	GROUNDED INTERNALLY	GND	66
SELCAL/ACARS DATA OUT	SELCAL AUDIO OR ACARS DATA	AUDIO OUTPUT	67
FREQ-TONE-TRANSFER-DIS	DISCRETE (STRAP)	STRAP INPUT	68
SPARE 10 DISCRETE INPUT	SPARE DISCRETE INPUT was ARINC-429-COMPATIBLE-EN	DISCRETE INPUT	69
ACARS-DATA-IN-HI	AUDIO DATA (MSK)	AUDIO INPUT	70
A429 CMU #1 TO VDR IN PORT B	ARINC 429 HS BUS FROM CMU #1 was (AUX-CDH-BUS-MONITOR-EN)	BUS INPUT	71
A429 CMU #1 TO VDR IN PORT A	ARINC 429 HS BUS FROM CMU #1 was (DATA-DISABLE)	BUS INPUT	72
A429 NAVCOM OUT PORT B	ARINC 429 LS BUS (VDR STATUS)	BUS OUTPUT	73
A429 NAVCOM OUT PORT A	ARINC 429 LS BUS (VDR STATUS)	BUS OUTPUT	74
A429 VDR TO CMU OUT PORT B	ARINC 429 HS BUS TO CMUS	BUS OUTPUT	75
A429 VDR TO CMU OUT PORT A	ARINC 429 HS BUS TO CMUS	BUS OUTPUT	76
A429 CMU #2 TO VDR IN PORT B	ARINC 429 HS BUS FROM CMU #2	BUS INPUT	77
A429 CMU #2 TO VDR IN PORT A	ARINC 429 HS BUS FROM CMU #2	BUS INPUT	78

2.2.3 RTIU Cable Signal & Pin Assignment

RTIU Pin #	VRD Pin #	VDR Description
P2B2	1	Fan Control
P2V3	2	Microphone Hi
P2Z4	3	Gnd
P2G4	4	Spare 11
P2S5	5	NC Phone Lo
P1A3	6	RS422 IN HI
P2P2	7	SIDETONE PHONE AUDIO
P1T1	8	TUNE/TEST INHIBIT
P1G6	9	RCB REURN
P2E1	10	RCB RX DATA
P2F1	11	RCB TX DATA
P1A2	12	RS422 OUT 1LO
P1B2	13	RS422 OUT 1HI
P2F4	14	VOICE/DATA SELECT
P2H4	15	DATA KEY
P2C6	16	RX429 FREQ2 B
P1H6	17	RX429 FREQ1 B
p1Z6	18	GND
P2S1	19	SPARE 1
P1b5	20	+28V IN
P2D5	21	FAN #1 MONITOR
P2M6	22	MICROPHONE LO
P2H6	23	POWER ON/OFF
P2D6	24	MIC PTT
P2T5	25	NC PHONE HI
P1B3	26	RS422 IN LO
P2S2	27	REC PHONE AUDIO
p2C5	28	VDR EMERG SEL
P2C2	29	SPARE 2
P2V2	30	MKR AUDIO LO
P2L5	31	MKR AUDIO HI
P1T2	32	SYS POS MS BIT
P1V2	33	SYS POS LS BIR
P2J3	34	VOICE/DATA STATUS
P2C3	35	RX429 FREQ2 A
P1G6	36	RX429 FREQ1 A
P2a4	37	GND
P2G6	38	SPARE 3

P1b6	39	+28V IN
P2E4	40	FAN#2 MONITOR
P1X5	41	LAN RX-
P2A5	42	SIMULCOM
P2B5	43	A429 1/2 SELECT
P2J4	44	A429 BURS TUNE ENABLE
P1M6	45	RNAV VIDEO
P1R1	46	RX AUDIO COMP DIS
P2a6	47	GND
P2D2	48	SPARE 4
P2D4	49	SPARE 5
P2E2	50	SPARE 6
P2R6	51	ACARS DATA IN LO
P1Y5	52	LAN RX+
P1Y6	53	LAN TX+
P1X6	54	LAN TX-
P1X4	55	RX429 FREQ3 B
P1Y4	56	RX429 FREQ3 A
P2a5	57	GND
P2K6	58	SPARE 7
P2b6	59	+28V IN
P2J6	60	FAN SUPPLY
P2E6	61	SPARE 8
P2V5	62	NAV/COM AUDIO+
P2E3	63	COM AUDIO EN
P2D3	64	VDR TRANSMIT
P1M3	65	VHF AGC
P2T2	66	SELCAL/ACARS DATA RET
P2U2	67	SELCAL/ACARS DATA OUT
P1N1	68	FREQ TONE TRANSFER DIS
P2F6	69	SPARE 10
P2S6	70	ACARS DATA IN HI
P2B6	71	RX429 CMU1 B
P2B3	72	RX429 CMU1 A
P1X2	73	TX429 STATUS B
P1Y2	74	TX429 STSTUS A
P1X3	75	TX429 CMU/GPS B
P1Y3	76	TX429 CMU/GPS A
P2A6	77	RX429 CMU2 B
P2A3	78	RX429 CMU2 A

2.3 Product Specification

PS7027386	System Requirements Specification for VHF Data Radio (VDR) Equipment, PN 7026201
7500301-000	Radio System Operation Specification
7500301-001	Radio Communications Bus Specification – General Specifications
7500301-002	RCB – VHF COM Data Specification

2.4 Governing Documents

EUROCAE ED-XX
Minimum Operational Performance Standards for Airborne Radio Communications Equipment Operating Within the Radio Frequency Range 118.000- 136.975 MHz.

RTCA DO-186a

Minimum Operational Performance Standards for Airborne Radio Communications Equipment Operating Within the Radio Frequency Range 118.000- 136.975 MHz

EUROCAE ED-92

Minimum Operational Performance Standards for an Airborne VDL Mode-2 Transceiver Operating in the frequency range 118-136.975 MHz.

RTCA DO-160D
Environmental Conditions and Test Procedures for Airborne Equipment

RTCA DO-178B
Software Considerations in Airborne Systems and Equipment Certification

3. GENERAL INFORMATION

3.1 All tests shall be performed under conditions of 25 ± 10 °C and less than 90 percent relative humidity, unless otherwise specified.

3.2 All input signals shall be applied between the designated terminal and ground, unless otherwise stated. All output voltages shall be measured with respect to ground, unless otherwise stated.

3.3 No warm-up period is required.

3.4 All RF input voltages are expressed in HARD micro-volts.

The term "hard" microvolts refers to the sensitivity of the receiver as measured with a signal generator calibrated in terms of open circuit E.M.F. If a signal generator calibrated in terms of output voltage across a matched load is employed, hard microvolts are observed when a 6-dB pad is connected between it and the receiver.

3.5 The signal generator output impedance shall comprise a resistance of 50 ± 5 ohms and a reactance of not more than 5 ohms.

3.6 Unless otherwise specified, all tests shall be performed with the equipment antenna jack connected to a 50-ohm load.

3.7 The Standard on channel RF signal is an RF input signal generated at the selected radio frequency.

3.8 Unless otherwise stated, the Receiver Audio Compressor shall be OFF. (RTIU - Audio Compressor - Open)

NOTE: R.T.I.U. has all loads internal. No external loads are required.

REV LTR

3.9 COMM AUDIO

3.9.1 A 600 ohm ± 10% resistive load must be applied between PHONE AUDIO HI (P5-25) and PHONE AUDIO LO (P5-5).

3.9.2 SELCAL/ACARS (P5-67) must be terminated with a 600 ohm resistive load.

3.9.3 A 150 ohm ± 10% resistive load shall be applied between MIC HI (P5-2) and MIC LO (P5-22). MIC LO (P5-22) shall be grounded. The audio signal generator shall be capacitively coupled to MIC HI (P5-2).

3.9.4 3VOICE audio input levels specified for the transmitter are those appearing at MIC HI (P5-2) when the transmitter is keyed and transmitting.

3.9.5 DATA input levels specified for the transmitter are those appearing at ACARS_DATA_IN_HI (P5-70) when the transmitter is keyed and transmitting.

3.10 The transmitter is keyed by grounding the PTT Line (P5-24). The transmitter is un-keyed by releasing the ground on the PTT Line (P5-24).

3.11 The transmitter is keyed by grounding the DATA-KEY Line (P5-15). The transmitter is un-keyed by releasing the ground on the PTT Line (P5-15).

3.12 All alphanumeric symbols bracketed by greater-than/less-than "< >" symbols will require the characters be typed and "ENTER" or "Return" typed.

3.13 Bus Errors

The test equipment may continuously monitor the RCB port of the COMM module. If such monitoring is provided, the VDR shall generate no bus errors except when the power is off or being cycled off or on.

3.14 Transmitter power measurements shall be taken at 10 seconds after the transmitter is keyed unless otherwise specified.

3.15 Each test parameter reading will have a test number assigned. Test setup instructions will occur before the reading is taken. Taking the reading is the end of that test section and subsequent instructions belong to the next test parameter

3.16 Tests are normally done in sequence and the test steps are written for this purpose. If tests are performed out of sequence the tester is responsible for insuring the correct mechanical and software setups are performed. In cases where timing is required be sure to read the entire instruction before performing the test.

A **3.17** Record test results in the Functional Test Report (Appendix C) for all manual tests.

A **3.18** When using automated test equipment refer to Appendix D.

REV LTR

4. POWER REQUIREMENTS

Unless otherwise specified, all tests shall be conducted with the power-input voltage adjusted to 27.5 ± 0.1 V dc. This voltage shall be measured between the power-input terminals of the U.U.T.

VDR: **P5-20,39,59 (H) and P5-18,37, 57 (L)]**

5. TEST EQUIPMENT OR EQUIVALENT

Gain Phase Meter	HP3575A or equivalent
R.F. Signal Generator	HP8656B with OPT 001 or equivalent
Modulation Analyzer	HP8901A or equivalent
Audio Analyzer	HP8903B or equivalent
Digital Voltmeter	Keithley 178 or equivalent
Spectrum Analyzer	HP141T with 8554B and 8552B or equivalent
Oscilloscope	Tektronix 2465 or equivalent
Function Generator	HP3312A or equivalent
Frequency Counter	Phillips PM6614 or equivalent
Radio Test Interface Unit (RTIU)	Honeywell 7511400-902
RTIU Software	7512001-XYY Where X = media code as specified on drawing 7512001 and YY = 17 or greater (software version)

NOTE: RTIU P/N 7511400-901 is equipped with software version 7512001-108. RTIU P/N 7511400-902 is equipped with software version 7512001-109.

Harness Assembly RTIU-TR-855	7511409-937
Trap Filter	T360055 (required only for original manufacturing tests)
ARINC 429 Test Set	JcAir 429 or equivalent

5.1 Alternate Test Equipment

Honeywell EPIC Computer Aided Test System	T336384
VDR Adapter	T336400

5.2 Test Software

The following table indicates the software part numbers and revision status for the various automated test stations and test software.

	Test Station Part No.	Name	Software Part No.	Rev Letter
A	T336384	Epic CATS	MT7026201-500	(-)
A			Or	
A			MT7510763-501	(F)

A

6. TEST SETUP

6.1 Initial Setup

Turn the RTIU main power on.
Turn P.C. power on.
When main menu appears on screen:

Select VDR (TR-850/833/853).	<12>
Select TR-833/853	<2>

The Page Menu should appear:

Select CONFIGURATION PAGE	<C>

CONFIGURATION SOURCE DISPLAY should appear:

EXTENDED STATUS	YES	(1 VALID)
TRANSFER TONE	GND	(0 ENABLE)
AUDIO COMPRESSOR	OPEN	(1 DISABLE)
COM ACH MONITOR	GND	(0 ENABLE)
SYS POSITION	SYS 1	(00)
ARINC 716 DATA MODE	OPEN	(0 DISABLE)
TX TIMEOUT	OPEN	(0 2 MINUTES)
CHANNEL ANTIBLOCKING	OPEN	(0 DISABLE)
ARINC 429 COMPATIBLE	GND	(1 COMPATIBLE)
DATA ENABLE	OPEN	(1 ENABLE)
COM ON/OFF	OFF	
ERROR	| DATA BLOCK TIME-OUT |	

If the source display does not match the settings above, enter the appropriate letter as indicated by the menu at the bottom of the page.

Go to PAGE MENU	<P>
Select AUDIO/ANALOG PAGE	<A>
Select AUDIO SOURCE	<S>
BNC	<1>
Select AUDIO INPUT	<I>
MICROPHONE	<A>
Return to PAGE MENU	<P>
Go to RCB PAGE	<R>

Turn the 28-V dc power supply ON (Adjust supply for 27.5 V dc ± 0.1 V)

6.2 Test Setup #1

After initial setup has been performed:

Connect VDR per Figure 2.

Turn ON the 28 V dc on R.T.I.U

<F>: CHANGE FREQUENCY

<127.500> FREQUENCY IN MHz

If necessary:

<Q> Change squelch status to TEST and OPEN

<V> Voice Select

<V> VOICE mode.

SIGNAL GENERATOR:

Apply a 127.500 MHz, 3 uV RF LEVEL, with standard modulation of 1000 Hz at 30% AM to the VHF COM antenna connector.

6.3 Test Setup #2

After initial setup has been performed:

Connect VDR per Figure 3.

Turn 28 V dc on, on the RTIU.

<F>: CHANGE FREQUENCY

<127.100> FREQUENCY IN MHz

If necessary:

<Q> Change squelch status to TEST and OPEN

<V> Voice Select

<V> VOICE mode.

MODULATION ANALYZER:

Connect two 20-dB attenuators in series, between the VHF COM antenna connector and the modulation analyzer.

6.4 Test Setup # 3

After initial setup has been performed:

Connect VDR per Figure 4.

Turn ON 28 V dc power on R.T.I.U

<F>: SELECT FREQUENCY

REV LTR

<118.100> FREQUENCY IN MHz

If necessary:

<Q> Change squelch status to TEST and OPEN

<V> Voice Select

<V> VOICE mode.

SPECTRUM ANALYZER:

Connect two 20-dB attenuators in series, between the VHF COM antenna connector and the spectrum analyzer.

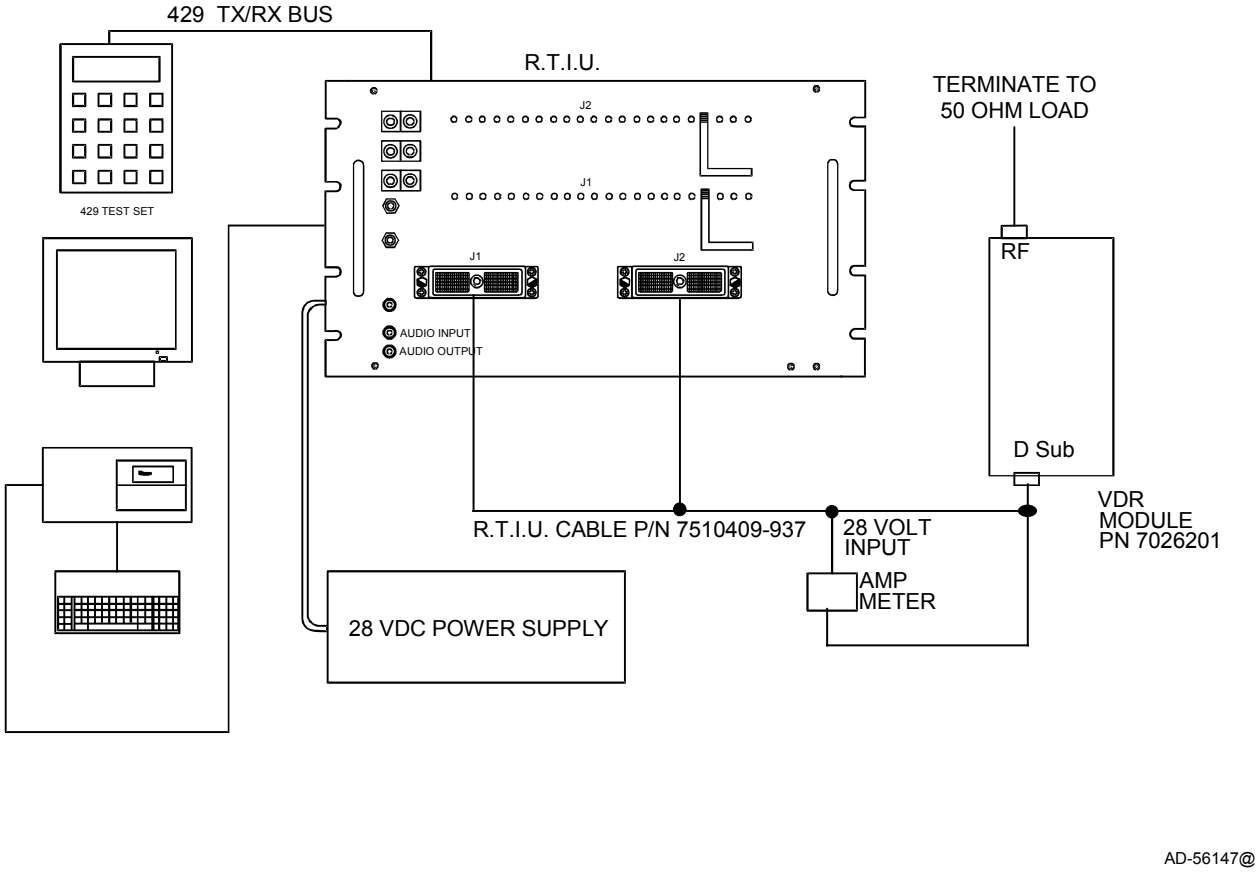

Figure 1

REV LTR

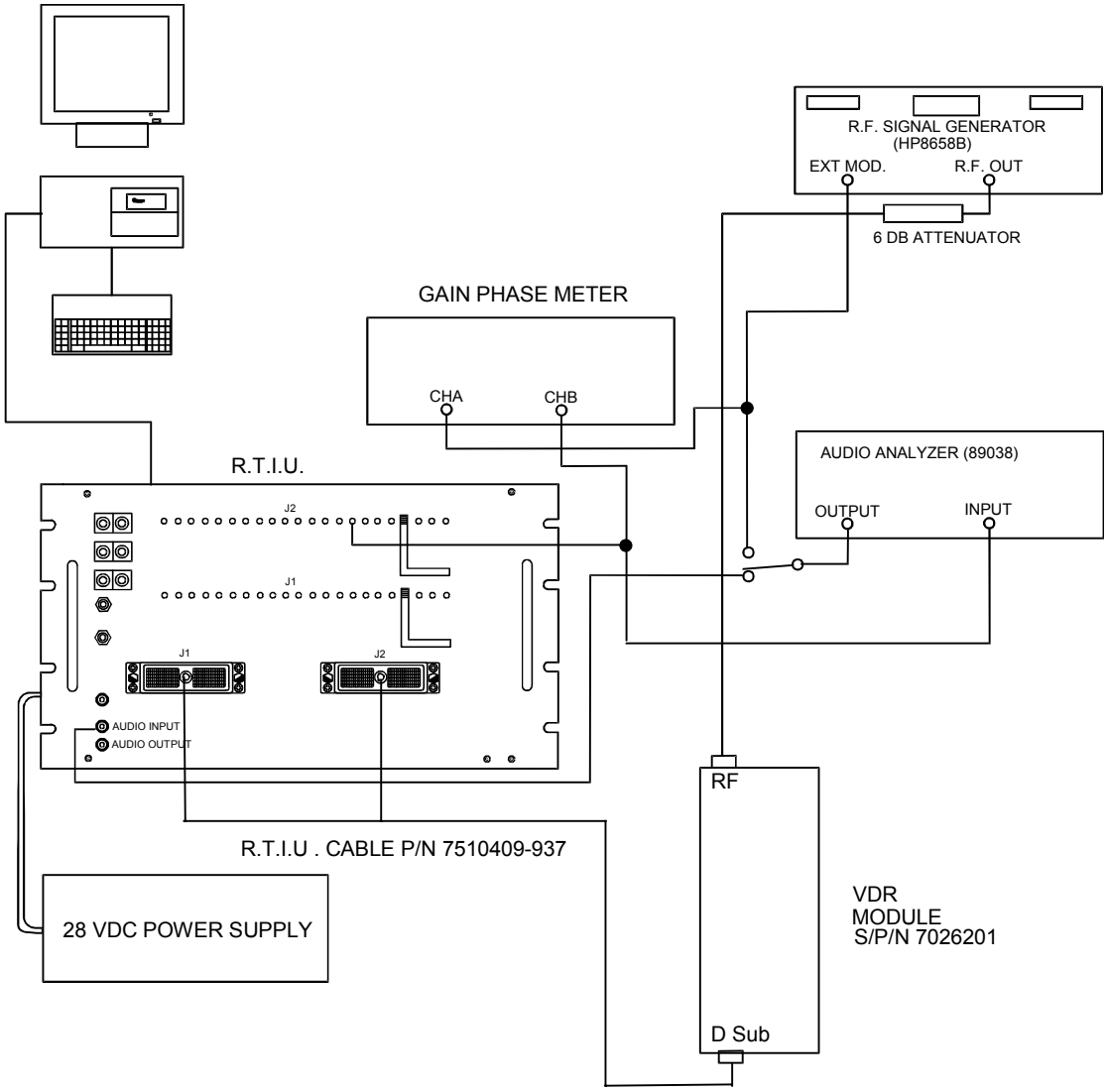

Figure 2

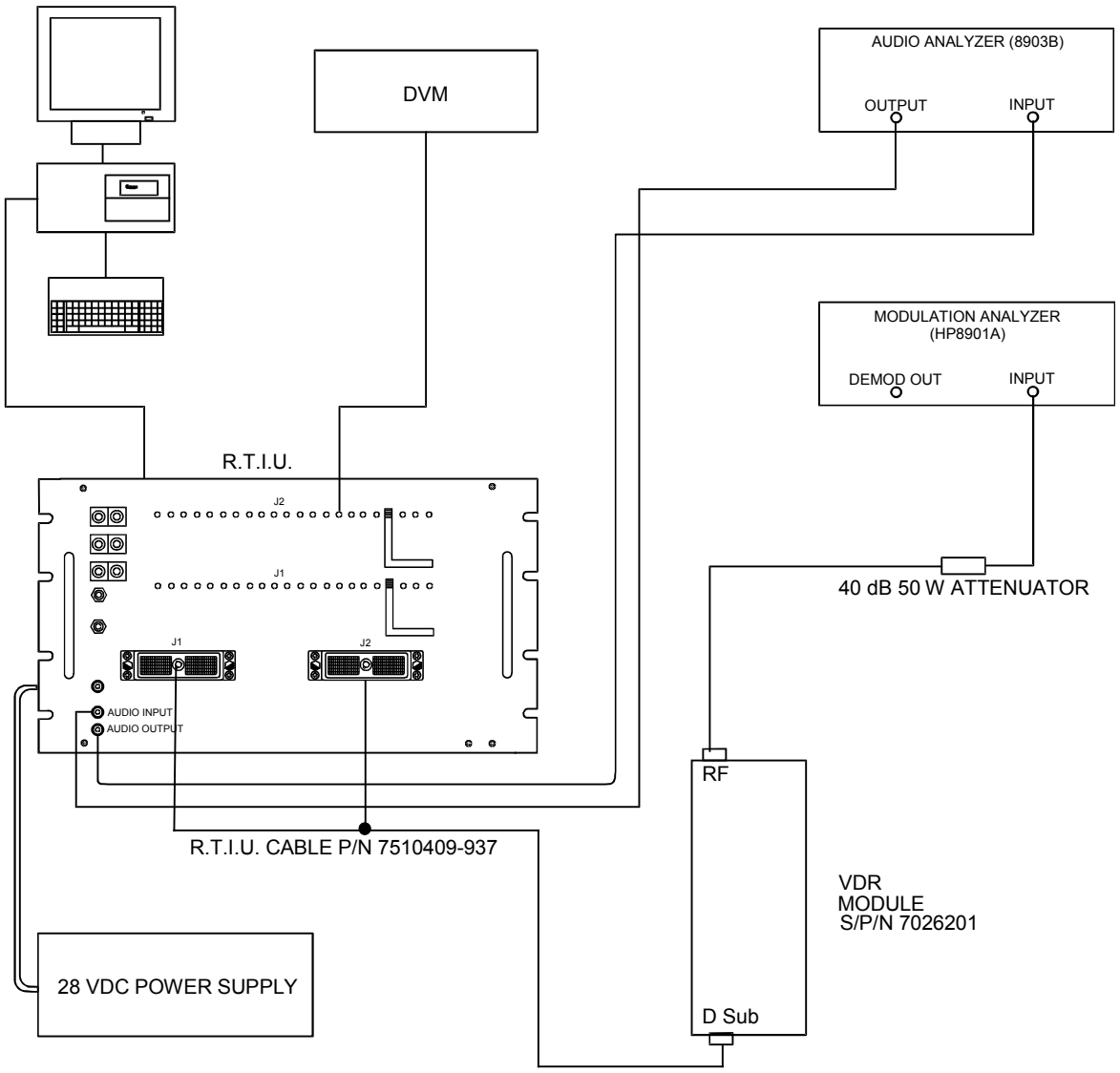
DVM
AUDIO ANALYZER (8903B)
OUTPUT
INPUT
MODULATION ANALYZER
(HP8901A)
DEMOD OUT
INPUT
R.T.I.U.
J2
J1
J1
J2
AUDIO INPUT
AUDIO OUTPUT
40 dB 50 W ATTENUATOR
RF
R.T.I.U. CABLE P/N 7510409-937
VDR
MODULE
S/P/N 7026201
28 VDC POWER SUPPLY
D Sub

Figure 3

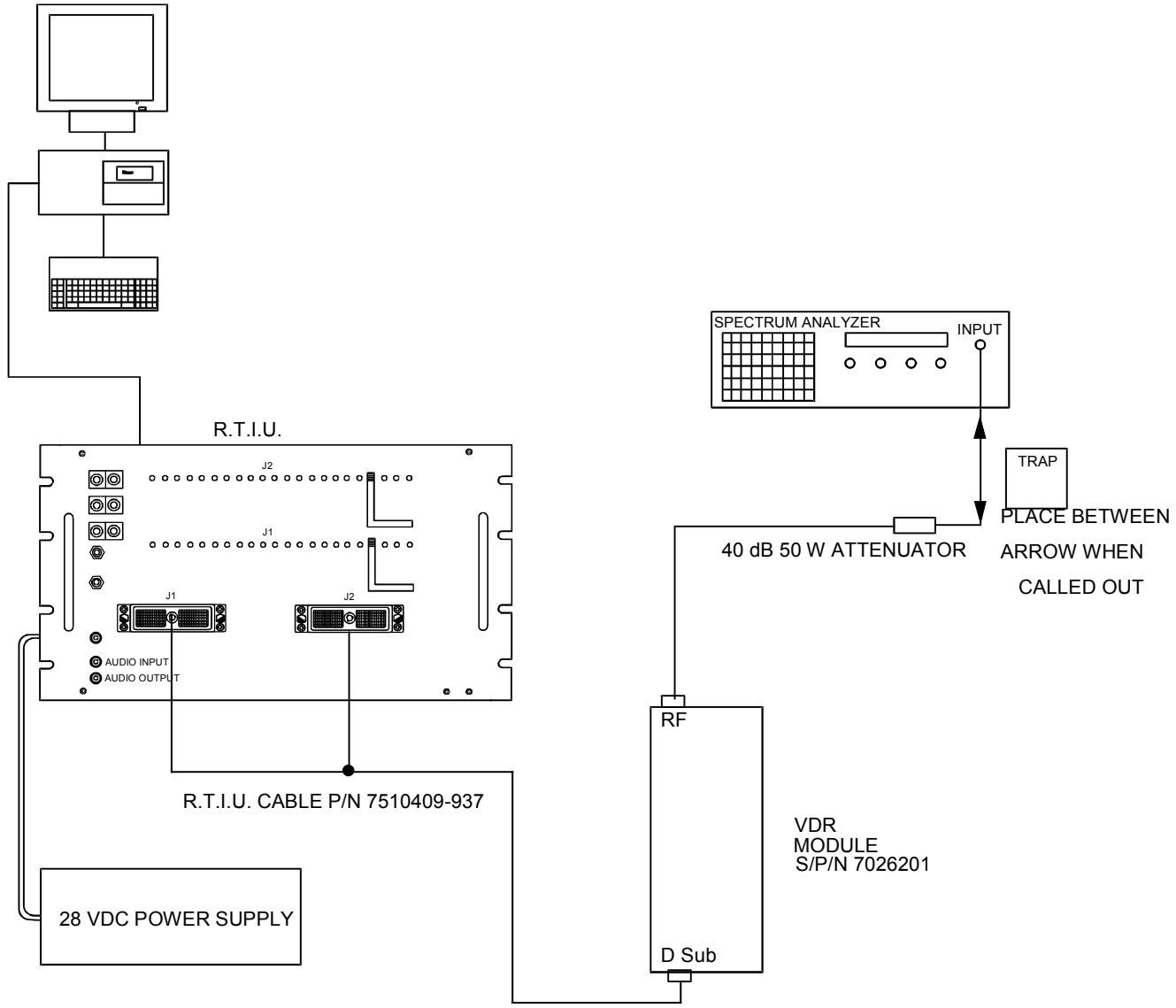
SPECTRUM ANALYZER
INPUT
R.T.I.U.
J2
J1
J1
J2
AUDIO INPUT
AUDIO OUTPUT
TRAP
PLACE BETWEEN
ARROW WHEN
CALLED OUT
40 dB 50 W ATTENUATOR
RF
R.T.I.U. CABLE P/N 7510409-937
VDR
MODULE
S/P/N 7026201
28 VDC POWER SUPPLY
D Sub

Figure 4

REV LTR

7. TEST REQUIREMENTS

Column	Description
Rev Ltr	This column is used to identify revised material.
Test No.	Tests are numbered in sequence in steps of 10. If new tests are added adding 1-9 to the end of the appropriate section will number them e.g. add new test to 1.010 results in 1.011.
Opr Limits	Unit under test (UUT) shall meet these limits whenever tested at other than the manufacturing facility. When an item is marked OPTIONAL in this column, the corresponding test is not required except as an aid in troubleshooting.
Test Description	These items are the parameters to which the unit under test was designed. In addition, these items aid in troubleshooting by specifying the input and output signal terminals. For brevity, all conditions required are not repeated for each test. Conditions established in previous tests will also apply.
Switch Pos	Perform switch settings in order specified. When an item is entered in Work Steps Column opposite a switch setting other than the first or when there is additional space between switches, perform this item before setting any other switches.
Work Steps	When work step items are entered opposite first Switch Pos, perform all switch settings first. When items are entered opposite switch setting other than first setting or when there is additional space between switches, perform work step item before setting any other switches.
Mfg Limits	Unit under test shall meet these limits prior to customer delivery.
Code	A "1" in the column indicates that the material in the next column applies only to manual test procedures. A "2" in the column indicates that the material in the next column applies only to Automatic Test Equipment procedures. A blank column indicates that the material in the next column applies equally to manual and automated test procedures.

REV	TEST	SPECIFICATION			PROCEDURE			SPECIFICATION
LTR	NO.	OPR LIMITS	C	TEST DESCRIPTION	SWITCH POS	C	WORK STEPS	MFG LIMITS
	1.000			RECEIVE INPUT CURRENT	Test Setup #1		RECEIVE INPUT CURRENT Connect per Figure #1 R.T.I.U.: 28 VOLT POWER OFF R.T.I.U.:28 VOLT POWER ON	
				Apply logic ’0’ to on/off (P5-23) [open collector on].	<O>		COM ON/OFF: OFF.	
	1.010	One or more errors (Not blank)		The radio shall generate errors.			Observe the RTIU screen. The row indicate by ERRORS shall indicate as specified.	One or more errors (Not blank)
				Apply logic ’1’ to on/off (P5-23) [open collector off].	<O> <Q>		COM ON/OFF: ON. Squelch Normal (Closed)	
	1.020	less than or equal to 1.0 A		Measure the current on P5-20, 39,59 (H) and P5-18, 37, 47, 57(L) Reading shall be as specified.			The current on the milliamp meter shall read as specified. R.T.I.U.: 28 VOLT POWER OFF R.T.I.U.:28 VOLT POWER ON	less than or equal to 1.0 A
					<Q>		Squelch Test (Open)	

REV	TEST	SPECIFICATION			PROCEDURE			SPECIFICATION
LTR	NO.	OPR LIMITS	C	TEST DESCRIPTION	SWITCH POS	C	WORK STEPS	MFG LIMITS
	2.000			SELF TEST Place holder for future self test	Test setup #1		SELF TEST .	

REV	TEST	SPECIFICATION			PROCEDURE			SPECIFICATION
LTR	NO.	OPR LIMITS	C	TEST DESCRIPTION	SWITCH POS	C	WORK STEPS	MFG LIMITS
	3.000			RECEIVER TEST: SENSITIVITY All measurements are taken at NAV/COM-AUDIO+ (P5-62) with a load of 8200 ohms. All tests are done with standard modulation of 1000 Hz at 30%.	Test Setup #1		RECEIVER TEST: SENSITIVITY Connect per Figure # 2 SIGNAL GENERATOR: Connect the signal generator to the VHF COM antenna connector. The signal amplitude is measured at the antenna port and is specified in HARD uV. Change the signal strength accordingly for all cable losses. AUDIO ANALYZER: Connect the audio analyzer input to the R.T.I.U. front panel (J2V5/J2U5) (NAV/COM-AUDIO+). Set the audio analyzer to measure SINAD.	
				Channel the radio to 118.025. Inject a 118.025 MHz 3.0 uV signal into the antenna port.	<F> <118.025>		Frequency 118.025 SIGNAL GENERATOR: Set frequency for 118.025 MHz, modulate at 1 kHz 30% AM. R.F. output for 3.0 uV.	
	3.010	greater than or equal to 6 dB		Verify the SINAD at NAV/COM-AUDIO+ (P5-62) is as specified. Select radio frequency 128.025.	<F> <128.025>		AUDIO ANALYZER: The SINAD at the audio output shall be as specified. Frequency 128.025	greater than or equal to 7 dB

REV	TEST	SPECIFICATION			PROCEDURE			SPECIFICATION
LTR	NO.	OPR LIMITS	C	TEST DESCRIPTION	SWITCH POS	C	WORK STEPS	MFG LIMITS
				Inject a 128.025 MHz 3.0 uV signal into the VHF COM antenna connector.			SIGNAL GENERATOR: Set the signal generator frequency for 128.025, R.F. output for 3.0 uV.	
	3.020	greater than or equal to 6 dB		Verify the SINAD at NAV/COM-AUDIO+ (P5-62) is as specified.			AUDIO ANALYZER: The SINAD at the audio output shall be as specified.	greater than or equal to 7 dB
A				Select radio channel 123.030 (narrow band mode). Inject a 123.030 MHz 3.0 uV signal into the VHF COM antenna connector.	<F> <123.030>		Frequency 123.030	
	3.030	greater than or equal to 6 dB		Verify the SINAD at NAV/COM-AUDIO+ (P5-62) is as specified.			AUDIO ANALYZER: The SINAD at the audio output shall be as specified.	greater than or equal to 7 dB
				Select radio channel 136.975.	<F> <136.975>		Frequency 136.975	
				Inject a 136.975 MHz 3.0 uV signal into the VHF COM antenna connector.			SIGNAL GENERATOR: Set signal generator for 136.975 MHz, R.F. output for 3.0 uV.	
	3.040	greater than or equal to 6 dB		Verify the SINAD at NAV/COM-AUDIO+ (P5-62) is as specified.			AUDIO ANALYZER: The SINAD at the audio output shall be as specified.	greater than or equal to 7 dB
A				Inject a 151.975 MHz 3.0 uV signal into the VHF COM antenna connector.			SIGNAL GENERATOR: Set signal generator for 151.975 MHz, R.F. output for 3.0 uV.	

REV	TEST	SPECIFICATION			PROCEDURE			SPECIFICATION
LTR	NO.	OPR LIMITS	C	TEST DESCRIPTION	SWITCH POS	C	WORK STEPS	MFG LIMITS
A								
				Select radio channel 151.975. Inject a 151.975 MHz 3.0 uV signal into the VHF COM antenna connector.	<F> <151.975>		FREQUENCY 151.975	
	3.050	greater than or equal to 6 dB		Verify the SINAD at NAV/COM-AUDIO+ (P5-62) is as specified.			<u>AUDIO ANALYZER:</u> The SINAD at the audio output shall be as specified.	greater than or equal to 7 dB
					<F> <127.500>		FREQUENCY 127.500	

REV LTR	TEST NO.	SPECIFICATION OPR LIMITS	C	TEST DESCRIPTION	PROCEDURE SWITCH POS	C	WORK STEPS	SPECIFICATION MFG LIMITS
	4.000			RECEIVER SELECTIVITY Channel the radio to 127.500. Apply a 127.500 MHz, 10 mV, 8 kHz, 30% modulation signal to the VHF COM antenna connector. (This is the highest modulation frequency that will fit in a 25 kHz channel without introducing distortion)	Test Setup #1		RECEIVER SELECTIVITY Connect per Figure 2. SIGNAL GENERATOR Set the Signal Generator to 127.500 MHz. Set the R.F. level for 10 mV, 8 kHz, 30% modulation. AUDIO ANALYZER Connect the Audio Analyzer to the RTIU front panel (J2U2/J2T2). Set the Audio Analyzer to measure distortion.	
	4.010	less than or equal to 5%		Measure the distortion level at SELCAL/ACARS-DATA-OUT (P5-67). The distortion shall be as specified. Channel the radio to 127.505. Apply a 127.500 MHz, 10 mV, 3 kHz, 30% modulation signal to the VHF COM antenna connector. (This is the highest modulation frequency that will fit in a 8.33 kHz channel without introducing distortion)	<F> <127.505>		Measure the distortion at SELCAL/ACARS-DATA-OUT (RTIU J2U2/J2T2). The distortion level shall be as specified. FREQUENCY 127.505 SIGNAL GENERATOR Set the Signal Generator to 127.500 MHz. Set the R.F. level for 10 mV, 3 kHz, 30% modulation.	less than or equal to 5%

REV	TEST	SPECIFICATION			PROCEDURE			SPECIFICATION
LTR	NO.	OPR LIMITS	C	TEST DESCRIPTION	SWITCH POS	C	WORK STEPS	MFG LIMITS
	4.020	less than or equal to 5%		Measure the distortion level at SELCAL/ACARS-DATA-OUT (P5-67). The distortion shall be as specified. Apply a 127.500 MHz, 10 mV, 8 kHz, 30% modulation signal to the antenna port. (This modulation frequency will be outside what can be received in a 8.33 kHz channel)			Measure the distortion at SELCAL/ACARS-DATA-OUT (RTIU J2U2/J2T2). The distortion level shall be as specified. SIGNAL GENERATOR Set the Signal Generator to 127.500 MHz. Set the R.F. level for 10 mV, 8 kHz, 30% modulation. AUDIO ANALYZER: Set the audio analyzer to measure Vrms.	less than or equal to 5%
A	4.030	less than or equal to 25 mVrms		Measure the audio level at SELCAL/ACARS-DATA-OUT (P5-67). The distortion shall be as specified.	<F> <127.500>		Measure the audio at SELCAL/ACARS-DATA-OUT (RTIU J2U2/J2T2). The distortion level shall be as specified. Frequency 127.500	less than or equal to 25 mVrms

REV	TEST	SPECIFICATION			PROCEDURE			SPECIFICATION
LTR	NO.	OPR LIMITS	C	TEST DESCRIPTION	SWITCH POS	C	WORK STEPS	MFG LIMITS
	5.000			CARRIER SQUELCH	Test Setup # 1		CARRIER SQUELCH Connect per Figure # 2.	
A				On units with MOD B cycle the power OFF the ON	<0> Wait 10 Sec. <0>		SIGNAL GENERATOR: Remove the R.F. output from the VHF COM antenna connector.	
A				Channel the radio to 123.5. Apply a standard on channel R.F. signal at 1 uV, 50% modulation to the VHF COM antenna connector.			SIGNAL GENERATOR: Set signal generator to 123.500 MHz. R.F. level to 1 uV, 1000 Hz 50% modulation.	
					<Q>		Change SQUELCH TEST to SQUELCH NORMAL (SQUELCH CLOSE). Verify radio squelch is normal and closed.	
							AUDIO ANALYZER: Connect the input of the audio analyzer to the R.T.I.U. front panel (J2V5/J2U5). Set the audio analyzer to measure VAC.	
	5.010	Less than or equal to 10 mVrms		With no R.F. signal applied, the voltage at NAV/COM-AUDIO+ (P5-62) shall be as specified.			Measure the NAV/COM-AUDIO+ level (J2V5/J2U5), it shall be as specified.	Less than or equal to 10 mVrms
				Open the squelch using the squelch test function.	<Q>		Change SQUELCH NORMAL to SQUELCH TEST (SQUELCH OPEN). Verify radio squelch is test and open	

REV	TEST	SPECIFICATION			PROCEDURE			SPECIFICATION
LTR	NO.	OPR LIMITS	C	TEST DESCRIPTION	SWITCH POS	C	WORK STEPS	MFG LIMITS
A							SIGNAL GENERATOR: Connect the R.F. output to the VHF COM antenna connector. Set R.F. output to 0.1 uV.	
	5.020	Greater than or equal to 100 mVrms		With no R.F. signal applied, the voltage at NAV/COM-AUDIO (P5-62) shall be as specified.			AUDIO ANALYZER: The NAV/COM-AUDIO+ (J2V5/J2U5) shall be as specified.	Greater than or equal to 100 mVrms.
				Close the squelch using the squelch test function. Apply an on channel R.F. signal with standard modulation.	<Q>		Change SQUELCH TEST to SQUELCH NORMAL. Verify radio squelch is normal and closed.	
A							SIGNAL GENERATOR: Set R.F. frequency to 123.500 MHz. Set R.F. level for 5 uV, 5000 Hz 30% modulation.	
	5.030	10 to 20 µV		Gradually increase the R.F. signal level until RTIU indicates squelch OPEN The R.F. signal level shall be as specified.			Gradually increase the R.F. signal level RTIU indicates squelch OPEN. The R.F. signal level shall be as specified. AUDIO ANALYZER: Set audio analyzer to measure VAC. Connect input to R.T.I.U. audio output (J2V5/J2U5).	12 to 18 µV
A	5.040			Place holder for future test.				

REV	TEST	SPECIFICATION			PROCEDURE			SPECIFICATION
LTR	NO.	OPR LIMITS	C	TEST DESCRIPTION	SWITCH POS	C	WORK STEPS	MFG LIMITS
							SIGNAL GENERATOR: Slowly decrease the R.F. level until the RTIU indicates squelch CLOSED	
	5.050	4 to 8 dB		Gradually decrease the R.F. signal level RTIU indicates squelch CLOSED. The R.F. signal level shall be smaller than that obtained in (5.03) by the amount shown.			The difference in signal levels between 5.03 and 5.05 shall be as specified.	4 to 8 dB
					<Q>		Squelch Test to Squelch Normal	

REV	TEST	SPECIFICATION			PROCEDURE			SPECIFICATION
LTR	NO.	OPR LIMITS	C	TEST DESCRIPTION	SWITCH POS	C	WORK STEPS	MFG LIMITS
	6.000			NOISE SQUELCH	Test Setup # 1		NOISE SQUELCH Connect per Figure 2	
					<Q>		Change SQUELCH TEST to SQUELCH NORMAL	
A				Channel the radio to 123.5. Apply a standard on channel R.F. signal at 1 uV, 50% modulation to the VHF COM antenna connector.			SIGNAL GENERATOR: Set signal generator to 123.500 MHz. R.F. level to 1 uV, 1000 Hz 50% modulation. DVM: Connect the DVM (H) to the R.T.I.U. (J2H3) and power ground. Set DVM to measure DC volts. Monitor while adjusting signal generator.	
	6.010	2.0 to 3.0 µV		Gradually increase the R.F. signal level until the RTIU indicates squelch OPEN			SIGNAL GENERATOR: Slowly increase the R.F. signal level until the RTIU indicates squelch OPEN AUDIO ANALYZER: Connect audio analyzer input to the R.T.I.U. front panel (J2V5/J2U5). Set the analyzer to measure VAC.	2.2 to 3.0 µV
	6.020	Greater than or equal to 100 mVrms		The voltage at NAV/COM-AUDIO+ (P5-62) shall be as specified.			The NAV/COM-AUDIO+ (J2V5/J2U5) level shall be as specified.	Greater than or equal to 100 mVrms

REV	TEST	SPECIFICATION			PROCEDURE			SPECIFICATION
LTR	NO.	OPR LIMITS	C	TEST DESCRIPTION	SWITCH POS	C	WORK STEPS	MFG LIMITS
	6.030	4 to 8 dB		Gradually decrease the R.F. signal level until the RTIU indicates squelch CLOSED. The R.F. signal level shall be less than that measured in (6.01) by the amount shown.			Slowly decrease R.F. signal level until the RTIU indicates squelch CLOSED The difference in R.F. signal levels between 6.01 and 6.03 shall be as specified.	4 to 8 dB
A				Channel the radio to 123.505.	<F> <123.505>		Frequency 123.505	
A				On units with MOD B cycle the power OFF the ON	<0> Wait 10 sec			
A				Apply a standard, on channel R.F. signal at 1 μV, 50% modulation to the VHF COM antenna connector.			<u>SIGNAL GENERATOR:</u> Set signal generator to 123.500 MHz, R.F. level to 1 μV, 1000 Hz, and 50% modulation. <u>DVM</u> Connect the DVM (H) to the R.T.I.U. (J2H3) and power ground. Set DVM to measure DC volts. Monitor while adjusting signal generator.	
	6.040	2.0 to 3.0 μV		Gradually increase the RF signal level until the RTIU indicates squelch OPEN. The RF level shall be as specified.			<u>SIGNAL GENERATOR</u> Slowly increase R.F. signal level until the RTIU indicates squelch OPEN. <u>SIGNAL GENERATOR</u> Slowly decrease R.F. signal level until the RTIU indicates squelch CLOSED.	2.2 to 3.0 μV

REV	TEST	SPECIFICATION			PROCEDURE			SPECIFICATION
LTR	NO.	OPR LIMITS	C	TEST DESCRIPTION	SWITCH POS	C	WORK STEPS	MFG LIMITS
	6.050	4 to 8 dB		Gradually decrease the RF signal level until the RTIU indicates squelch CLOSED. The RF signal level shall be less than that measured in 6.040 by the amount shown.			The difference in RF signal levels between 6.040 and 6.050 shall be as specified.	4 to 8 dB
					<Q>		Change SQUELCH TEST to SQUELCH NORMAL	

REV	TEST	SPECIFICATION			PROCEDURE			SPECIFICATION
LTR	NO.	OPR LIMITS	C	TEST DESCRIPTION	SWITCH POS	C	WORK STEPS	MFG LIMITS
	7.000			AUDIO OUTPUT LEVEL	Test Setup #1		Connect per Figure # 2	
A				On all units except MOD B Switch the Receive Audio COMPRESSOR ON.	<P> <C> <C> <O> WAIT 10 SEC <O>		RCB Page Configuration Page Audio Compressor: GND COM OFF WAIT 10 SEC COM ON	
				Apply a 1 mV on channel RF signal with 1 kHz, 80% modulation to the VHF COM antenna connector.			SIGNAL GENERATOR: Set the R.F. frequency for 127.500 MHz. Set the R.F. level for 1 mV, 1000 Hz 80% modulation.	
A							AUDIO ANALYZER: Connect the audio analyzer to the R.T.I.U. front panel (J2T2/J2S2). Set the audio analyzer to measure Vrms.	
A	7.010	2.9 ± 0.4 Vrms		Measure the audio level between REC-PHONE-AUDIO HI (P5-27) and PHONE AUDIO LO (P5-5). Apply a 600-ohm resistive load. The voltage shall be as specified.			The REC-PHONE-AUDIO voltage (J2T2/J2S2) shall be as specified.	2.9 ± 0.3 Vrms
							AUDIO ANALYZER: Connect the audio analyzer input to the R.T.I.U. front panel (J2V5/J2U5) Set the audio analyzer to measure Vrms.	

REV LTR	TEST NO.	SPECIFICATION OPR LIMITS	C	TEST DESCRIPTION	PROCEDURE SWITCH POS	C	WORK STEPS	SPECIFICATION MFG LIMITS
	7.020	0.71 ± 0.2 Vrms		Measure the audio level at NAV/COM-AUDIO+ (P5-62) [terminated with a 8.2k ohm resistor]. The voltage shall be as specified.			The voltage at NAV/COM-AUDIO+ (R.T.I.U. J2V5/ J2U5) shall be as specified.	0.71 ± 0.03 Vrms
				Reduce the modulation level of the RF signal to 40%.			SIGNAL GENERATOR: Set the modulation to 1000 Hz 40%.	
	7.030	REFERENCE		Measure the audio level at NAV/COM-AUDIO+ (P5-62).			Measure and record the NAV/COM-AUDIO+ (R.T.I.U. J2V5/J2U5).	REFERENCE
	7.040	Less than or equal to 2 dB		Measure the level change at NAV/COM-AUDIO+ (P5-62). The level change from 7.020 to 7.030 shall be as specified.			The change in level from 7.020 to 7.030 shall be as specified.	less than or equal to 1 dB
				Switch the Receive Audio COMPRESSOR OFF.	<C> <O> WAIT 10 SEC <O>		Audio Compressor: OPEN COM OFF WAIT 10 SEC COM ON	
	7.050	REFERENCE		Measure the audio level at NAV/COM-AUDIO+ (P5-62).			AUDIO ANALYZER: Measure the NAV/COM-AUDIO+ (P5-62) (R.T.I.U. J2V5/J2U5). Record for reference.	REFERENCE
	7.060	8 ± 2 dB		The level change from 7.030 to 7.050 shall be as specified.			Calculate the difference between (7.030) and (7.050). The difference shall be as specified.	8 ± 2 dB
							Return to the RCB/ACH PAGE.	
					<P> <R>		Page Menu RCB/ACH Page	

REV	TEST	SPECIFICATION			PROCEDURE			SPECIFICATION
LTR	NO.	OPR LIMITS	C	TEST DESCRIPTION	SWITCH POS	C	WORK STEPS	MFG LIMITS
	8.000			AUDIO OUTPUT DISTORTION	Test Setup #1		AUDIO OUTPUT DISTORTION Connect per Figure # 2	
A				On all units except MOD B. Switch the Receive Audio COMPRESSOR ON.	<P> <C> <C> <O> WAIT 10 SEC <O>		Page Menu Configuration Page COMPRESSOR: GND COM/OFF: OFF WAIT 10 SEC COM/OFF: ON	
				Apply a 127.500 MHz, 10,000 uV 300 Hz 30% modulation signal to the VHF COM antenna connector.			SIGNAL GENERATOR: Set the signal generator to 127.500 MHz. Set the R.F. level for 10 mV, 300 Hz 30% modulation. AUDIO ANALYZER: Connect audio analyzer input to the R.T.I.U. front panel (J2V5/J2U5). Set the audio analyzer to measure distortion.	
	8.010	Less than or equal to 5%		Measure the distortion level at the NAV/COM-AUDIO+ (P5-62). The distortion shall be as specified.			Measure the distortion at the NAV/COM-AUDIO+ (P5-62) (R.T.I.U. J2V5/ J2U5). The distortion level shall be as specified.	Less than or equal to 5%
				Apply an on channel R.F. signal of 10,000 uV with a modulation of 1000 Hz 30%.			SIGNAL GENERATOR: Set signal generator for 127.500 MHz. Set R.F. level for 10 mV 1000 Hz 30% modulation.	

REV	TEST	SPECIFICATION			PROCEDURE			SPECIFICATION
LTR	NO.	OPR LIMITS	C	TEST DESCRIPTION	SWITCH POS	C	WORK STEPS	MFG LIMITS
	8.020	Less than or equal to 5%		Measure the distortion level at the NAV/COM-AUDIO+ (P5-62). The distortion shall be as specified. Apply an on channel R.F. signal of 10,000 uV with a modulation of 3000 Hz 30%.			Measure the distortion at the NAV/COM-AUDIO+ (P5-62) (R.T.I.U. J2V5/ J2U5). The distortion level shall be as specified. <u>SIGNAL GENERATOR:</u> Set signal generator to 127.500 MHz. Set the R.F. level for 10 mV, 3000 Hz 30% modulation.	Less than or equal to 5%
	8.030	Less than or equal to 5%		Measure the distortion level at the NAV/COM-AUDIO+ (P5-62). The distortion shall be as specified.	<C> <O> WAIT 10 SEC <O> <P> <R>		Measure the distortion at the NAV/COM-AUDIO+ (P5-62) (R.T.I.U. J2V5/J2U5). The distortion level shall be as specified. Return to RCB/ACH PAGE. Audio Compressor: Open Com ON/OFF: OFF WAIT 10 SEC Com ON/OFF: ON Page Menu RCB/ACH Page	Less than or equal to 5%

REV LTR	TEST NO.	SPECIFICATION OPR LIMITS	C	TEST DESCRIPTION	PROCEDURE SWITCH POS	C	WORK STEPS	SPECIFICATION MFG LIMITS
	9.000			AUDIO FREQUENCY RESPONSE Select Radio Channel 127.50. Apply an on channel R.F. signal of 1000 uV at 1000 Hz 30% modulation.	Test Setup #1		AUDIO FREQUENCY RESPONSE Connect per Figure # 2 AUDIO ANALYZER: Connect Audio Analyzer 600-ohm audio output to the signal generator external modulation input. SIGNAL GENERATOR: Set the signal generator for 127.500 MHz. Set the R.F. level for 1000 uV, AM EXT MOD: 30% modulation. AUDIO ANALYZER: Set analyzer frequency for 1000 Hz. Adjust output voltage until signal generator HI/LO light goes out. AUDIO ANALYZER: Connect the audio analyzer input to the R.T.I.U. front panel (J2V5/J2U5). Set the audio analyzer to measure Vrms.	
	9.010	REFERENCE		Measure the audio level at NAV/COM-AUDIO+ (P5-62).			Measure the NAV/COM-AUDIO+ (P5-62) (R.T.I.U. J2V5/J2U5). Record for reference. AUDIO ANALYZER: Set analyzer frequency for 300 Hz. Adjust output voltage until signal generator HI/LO light goes out.	REFERENCE

REV LTR	TEST NO.	SPECIFICATION OPR LIMITS	C	TEST DESCRIPTION	PROCEDURE SWITCH POS	C	WORK STEPS	SPECIFICATION MFG LIMITS
				Change the modulation frequency to 300 Hz.			SIGNAL GENERATOR: Set the signal generator for 127.500 MHz. Set the R.F. level for 1 mV, AM EXT MOD: 30% modulation.	
	9.020	REFERENCE		Measure the audio level at NAV/COM-AUDIO+ (P5-62).			AUDIO ANALYZER: Measure the NAV/COM-AUDIO+ (P5-62) (R.T.I.U. J2V5/J2U5). Record for reference.	REFERENCE
				Change the modulation frequency to 3 kHz.			AUDIO ANALYZER: Set analyzer frequency for 3000 Hz. Adjust output voltage until signal generator HI/LO light goes out.	
							SIGNAL GENERATOR: Set the signal generator for 127.500 MHz. Set the R.F. level for 1 mV, AM EXT MOD: 30% modulation.	
	9.030	REFERENCE		Measure the audio level at NAV/COM-AUDIO+ (P5-62).			AUDIO ANALYZER: Measure the NAV/COM-AUDIO+ (P5-62) (R.T.I.U. J2V5/J2U5). Record for reference.	REFERENCE
				Change the modulation frequency to 4 kHz.			AUDIO ANALYZER: Set analyzer frequency for 4000 Hz. Adjust output voltage until signal generator HI/LO light goes out.	

REV	TEST	SPECIFICATION			PROCEDURE			SPECIFICATION
LTR	NO.	OPR LIMITS	C	TEST DESCRIPTION	SWITCH POS	C	WORK STEPS	MFG LIMITS
							SIGNAL GENERATOR: Set the signal generator for 127.500 MHz. Set the R.F. level for 1 mV, AM EXT MOD: 30% modulation.	
	9.040	REFERENCE		Measure the audio level at NAV/COM-AUDIO+ (P5-62).			AUDIO ANALYZER: Measure the NAV/COM-AUDIO+ (P5-62) (R.T.I.U. J2V5/J2U5). Record for reference.	REFERENCE
	9.050	Less than or equal to 6 dB		The variation in output level between 1 kHz, 300 Hz, and 3 kHz modulation (9.010, 9.020, 9.030) shall be as specified.			Calculate the Maximum dB difference between (9.010, 9.020, and 9.030). The difference shall be as specified.	Less than or equal to 4 dB.
	9.060	Greater than or equal to 18 dB		The decrease in output level between 1 kHz (9.010) and 4 kHz (9.040) shall be as specified.			Calculate the dB difference between (9.010) and (9.040). The decrease in output level between (9.010 and 9.040) shall be as specified.	Greater than or equal to 18 dB.

REV	TEST	SPECIFICATION			PROCEDURE			SPECIFICATION
LTR	NO.	OPR LIMITS	C	TEST DESCRIPTION	SWITCH POS	C	WORK STEPS	MFG LIMITS
	10.000			SELCAL/ACARS OUTPUT LEVEL Select radio channel 127.500. Apply an on channel R.F. signal of 1 mV with 70% 1 kHz modulation.	Test Setup # 1		SELCAL/ACARS OUTPUT LEVEL Connect per Figure # 2 SIGNAL GENERATOR: Set the signal generator to 127.500 MHz. Set the R.F. level to 1 mV, 1000 Hz INT AM, 70% modulation. AUDIO ANALYZER: Connect the audio analyzer input to the R.T.I.U. front panel (J2U2/J2T2). Set the analyzer to measure Vrms.	
	10.010	0.63 Vrms ±0.1		Measure the audio level at SELCAL/ACARS-DATA-OUT (P5-67) with a 600 ohm load applied. The voltage shall be as specified.			Measure the audio level SELCAL/ACARS-DATA-OUT (R.T.I.U. J2U2/J2T2). The voltage shall be as specified.	0.63 Vrms ±0.1

REV	TEST	SPECIFICATION			PROCEDURE			SPECIFICATION
LTR	NO.	OPR LIMITS	C	TEST DESCRIPTION	SWITCH POS	C	WORK STEPS	MFG LIMITS
	11.000			SELCAL/ACARS OUTPUT DISTORTION Apply a 127.500 MHz, 10,000 µV, 1000 Hz, and 30% modulation signal to the VHF COM antenna connector.	Test Setup # 1		SELCAL/ACARS OUTPUT DISTORTION Connect per Figure # 2 SIGNAL GENERATOR: Set the signal generator to 127.500 MHz. Set the R.F. level for 10 mV, 1000 Hz INT AM, 30% modulation. AUDIO ANALYZER: Connect audio analyzer input to the R.T.I.U. Front Panel (J2U2/J2T2) Set the audio analyzer to measure distortion.	
	11.010	Less than or equal to 5%		Measure the distortion level at the SELCAL/ACARS-DATA-OUT (P5-67) The distortion shall be as specified.			Measure the distortion at the SELCAL/ACARS-DATA-OUT (P5-67) (R.T.I.U. J2U2/J2T2). The distortion level shall be as specified.	Less than or equal to 5%

REV	TEST	SPECIFICATION			PROCEDURE			SPECIFICATION
LTR	NO.	OPR LIMITS	C	TEST DESCRIPTION	SWITCH POS	C	WORK STEPS	MFG LIMITS
	12.000			SELCAL/ACARS FREQUENCY AND PHASE RESPONSE Select Radio Channel 127.50. Apply an on channel R.F. signal of 1000 uV at 600 Hz 30% modulation.	Test Setup # 1		SELCAL/ACARS FREQUENCY AND PHASE RESPONSE Connect per Figure # 2 AUDIO ANALYZER: Connect Audio Analyzer 600-ohm audio output to the signal generator external modulation input. SIGNAL GENERATOR: Set the signal generator for 127.500 MHz. Set the R.F. level for 1000 uV, AM EXT MOD: 30% modulation. AUDIO ANALYZER: Set analyzer frequency for 600 Hz. Adjust output voltage until signal generator HI/LO light goes out. AUDIO ANALYZER: Connect the audio analyzer input to the R.T.I.U. front panel (J2U2/J2T2) Set the audio analyzer to measure Vrms.	
	12.010	REFERENCE		FREQUENCY RESPONSE Measure the audio level at SELCAL/ACARS-DATA-OUT (P5-67).			FREQUENCY RESPONSE Measure the SELCAL/ACARS-DATA-OUT (P5-67) (R.T.I.U. J2U2/J2T2). Record for reference.	REFERENCE

REV	TEST	SPECIFICATION			PROCEDURE			SPECIFICATION
LTR	NO.	OPR LIMITS	C	TEST DESCRIPTION	SWITCH POS	C	WORK STEPS	MFG LIMITS
				Change the modulation frequency to 1200 Hz.			AUDIO ANALYZER: Set analyzer frequency for 1200 Hz. Adjust output voltage until signal generator HI/LO light goes out.	
	12.020	REFERENCE		Measure the audio level at SELCAL/ACARS-DATA-OUT (P5-67).			AUDIO ANALYZER: Measure the SELCAL/ACARS-DATA-OUT (P5-67) (R.T.I.U. J2U2/J2T2). Record for reference.	REFERENCE
				Change the modulation frequency to 2.4 kHz.			AUDIO ANALYZER: Set analyzer frequency for 2400 Hz. Adjust output voltage until signal generator HI/LO light goes out.	
	12.030	REFERENCE		Measure the audio level at SELCAL/ACARS-DATA-OUT (P5-67).			AUDIO ANALYZER: Measure the SELCAL/ACARS-DATA-OUT (P5-67) (R.T.I.U. J2U2/J2T2). Record for reference.	REFERENCE
				Change the modulation frequency to 4 kHz.			AUDIO ANALYZER: Set analyzer frequency for 4000 Hz. Adjust output voltage until signal generator HI/LO light goes out.	
	12.040	REFERENCE		Measure the audio level at SELCAL/ACARS-DATA-OUT (P5-67).			AUDIO ANALYZER: Measure the SELCAL/ACARS-DATA-OUT (P5-67) (R.T.I.U. J2U2/J2T2). Record for reference.	REFERENCE

REV	TEST	SPECIFICATION			PROCEDURE			SPECIFICATION
LTR	NO.	OPR LIMITS	C	TEST DESCRIPTION	SWITCH POS	C	WORK STEPS	MFG LIMITS
				Change the modulation frequency to 6.6 kHz.			AUDIO ANALYZER: Set analyzer frequency for 6600 Hz. Adjust output voltage until signal generator HI/LO light goes out.	
	12.050	REFERENCE		Measure the audio level at SELCAL/ACARS-DATA-OUT (P5-67).			AUDIO ANALYZER: Measure the SELCAL/ACARS-DATA-OUT (P5-67) (R.T.I.U. J2U2/J2T2). Record for reference.	REFERENCE
	12.060	Less than or equal to 6 dB		The variation in output level between 600 Hz, 1.2 kHz, 2.4 kHz, 4 kHz, and 6.6 kHz modulation (12.010,12.020, 12.030, 12.040,12.050) shall be as specified.			Calculate the Maximum dB difference between (12.010, 12.020, 12.030, 12.040 and 12.050). The difference shall be as specified.	Less than or equal to 6 dB.

REV LTR	TEST NO.	SPECIFICATION OPR LIMITS	C	TEST DESCRIPTION	PROCEDURE SWITCH POS	C	WORK STEPS	SPECIFICATION MFG LIMITS
	13.000			A.G.C. RISE Select Radio channel 127.500. Apply an on channel R.F. signal (standard modulation) at 5 uV.	Test Setup #1		A.G.C. RISE Connect per Figure # 2 SIGNAL GENERATOR: Set the signal generator to 127.500 MHz. Set the R.F. level for 5 uV, 1000 Hz INT MOD, and 30% modulation. AUDIO ANALYZER: Connect the audio analyzer input to the R.T.I.U. front panel (J2V5/J2U5). Set the audio analyzer to measure Vrms.	
	13.010	REFERENCE		Measure the audio level at NAV/COM-AUDIO+ (P5-62). Change the R.F. level to 1000 uV.			Measure the NAV/COM-AUDIO+ (P5-62) (R.T.I.U. J2V5/J2U5) level. Record for reference. SIGNAL GENERATOR: Set the R.F. level for 1 mV.	REFERENCE
	13.020	REFERENCE		Measure the audio level at NAV/COM-AUDIO+ (P5-62). Change the R.F. level to 0.3 V.			AUDIO ANALYZER: Measure the NAV/COM-AUDIO+ (P5-62) (R.T.I.U. J2V52/J2U5) Audio Output level. Record for reference. SIGNAL GENERATOR: Set the R.F. level to 0.3 V.	REFERENCE

REV	TEST	SPECIFICATION			PROCEDURE			SPECIFICATION
LTR	NO.	OPR LIMITS	C	TEST DESCRIPTION	SWITCH POS	C	WORK STEPS	MFG LIMITS
	13.030	REFERENCE		Measure the audio level at the NAV/COM-AUDIO+ (P5-62).			AUDIO ANALYZER: Measure the NAV/COM-AUDIO+ (P5-62) (R.T.I.U J2V5/J2U5). Record for reference.	REFERENCE
	13.040	Less than or equal to 3 dB		The audio level variation from 5 uV (13.010) through 1000 uV (13.020) to 0.3 V (13.030) shall be as specified.			Calculate the audio level variation from (13.010 to 13.030). At no signal level shall the variation exceed as specified.	Less than or equal to 2 dB

REV LTR	TEST NO.	SPECIFICATION OPR LIMITS	C	TEST DESCRIPTION	PROCEDURE SWITCH POS	C	WORK STEPS	SPECIFICATION MFG LIMITS
	14.000			NOISE LEVEL Select Radio channel 127.500. Apply an on channel R.F. signal of 100 uV with standard modulation to the VHF COM antenna connector.	Test Setup #1		NOISE LEVEL Connect per Figure # 2 SIGNAL GENERATOR: Set the signal generator to 127.500 MHz. Set the R.F. level to 100 uV, 1000 Hz, 30% INT AM MOD. AUDIO ANALYZER: Connect the audio analyzer input to the R.T.I.U. front panel (J2V5/J2U5). Set the audio analyzer to measure Vrms.	
	14.010	REFERENCE		Measure and record the audio level at NAV/COM-AUDIO+ (P5-62).			Measure the NAV/COM-AUDIO+ (P5-62) (R.T.I.U. J2V5/J2U5). Record for reference. SIGNAL GENERATOR: Turn the modulation off. AM MOD: OFF	REFERENCE
	14.020	REFERENCE		Remove the modulation from the R.F. input signal. Measure and record the audio level at NAV/COM-AUDIO+ (P5-62).			AUDIO ANALYZER: Measure and record the NAV/COM-AUDIO+ (R.T.I.U. J2V5/J2U5).	REFERENCE
	14.030	greater than or equal to 30 dB		The ratio between the readings obtained in 14.010 and 14.020 shall be as specified.			Calculate the difference between (14.010) and (14.020). Shall be as specified.	greater than or equal to 33 dB

REV LTR	TEST NO.	SPECIFICATION OPR LIMITS	C	TEST DESCRIPTION	PROCEDURE SWITCH POS	C	WORK STEPS	SPECIFICATION MFG LIMITS
				Apply an on channel R.F. signal of 3000 uV with standard modulation to the VHF COM antenna connector.			SIGNAL GENERATOR: Set 30% INT MOD, R.F. level for 3000 uV.	
	14.040	REFERENCE		Measure and record the audio level at NAV/COM-AUDIO+ (P5-62).			AUDIO ANALYZER: Measure and record the audio level at NAV/COM-AUDIO+ (P5-62) (R.T.I.U. J2V5/J2U5) SIGNAL GENERATOR: Turn the modulation off.	REFERENCE
	14.050	REFERENCE		Remove the modulation from the R.F. input signal. Measure and record the audio level at NAV/COM-AUDIO+ (P5-62).			AUDIO ANALYZER: Measure and record the audio level at NAV/COM-AUDIO+ (P5-62) (R.T.I.U. J2V5/J2U5)	REFERENCE
	14.060	greater than or equal to 40 dB		The ratio between the readings obtained in 14.040 and 14.050 shall be as specified.			Calculate the difference between (14.040) and (14.050). The difference shall be as specified.	greater than or equal to 40 dB
				Apply an on channel R.F. signal of 0.1 V with standard modulation to the VHF COM antenna connector.			SIGNAL GENERATOR: Set the signal generator to 127.500 MHz. Set the R.F. level to 0.1V, 1000 Hz 30% INT AM MOD.	
	14.070	REFERENCE		Measure and record the audio level at NAV/COM-AUDIO+ (P5-62).			AUDIO ANALYZER: Measure and record the audio output at NAV/COM-AUDIO+ (P5-62) (R.T.I.U. J2V5/J2U5).	REFERENCE
				Remove the modulation from the R.F. input signal.			SIGNAL GENERATOR: Turn off the modulation.	

REV	TEST	SPECIFICATION			PROCEDURE			SPECIFICATION
LTR	NO.	OPR LIMITS	C	TEST DESCRIPTION	SWITCH POS	C	WORK STEPS	MFG LIMITS
	14.080	REFERENCE		Measure and record the audio level at NAV/COM-AUDIO+ (P5-62).			AUDIO ANALYZER: Measure and record the audio output at NAV/COM-AUDIO+ (P5-62) (R.T.I.U. J2V5/J2U5).	REFERENCE
	14.090	greater than or equal to 40 dB		The ratio between the readings obtained in 14.070 and 14.080 shall be as specified.			Calculate the difference between (14.070) and (14.080). The difference shall be as specified.	greater than or equal to 40 dB

REV	TEST	SPECIFICATION			PROCEDURE			SPECIFICATION
LTR	NO.	OPR LIMITS	C	TEST DESCRIPTION	SWITCH POS	C	WORK STEPS	MFG LIMITS
	15.000			IMAGE REJECTION	Test Setup #1		IMAGE REJECTION	
A				This test (15.xxx) applies to –813 only.			Connect per Figure # 2	
				Select Radio channel 127.5. Apply a 5 uV on channel un-modulated R.F. signal to the VHF COM antenna connector.			SIGNAL GENERATOR:	
							Set the signal generator to 127.500 MHz.	
							Set the R.F. level to 5 uV, no modulation.	
							DVM:	
							Connect the DVM to R.T.I.U. (J1M3) and D.C. ground.	
							Set the DVM to measure D.C. volts.	
	15.010	REFERENCE		Measure and record the AGC level (P5-65) in dB.			Measure and record the AGC voltage at (J1M3).	REFERENCE

REV	TEST	SPECIFICATION			PROCEDURE			SPECIFICATION
LTR	NO.	OPR LIMITS	C	TEST DESCRIPTION	SWITCH POS	C	WORK STEPS	MFG LIMITS
				Change the frequency of the R.F. input signal to the image frequency (171.150 MHz). Increase the R.F. level of the input signal until the AGC level of step 15.01 is obtained.			SIGNAL GENERATOR: Set the signal generator to 171.150 MHz. Increase the R.F. level of the input signal until the AGC voltage is equal to the value obtained in (15.010). NOTE: The AGC voltage should increase from (15.01) when the frequency is changed. When the R.F. level is increased the AGC voltage will decrease to the level of (15.010). If the AGC level has not dropped below the reference level then a larger R.F. input is necessary and the image rejection is greater than 90 dB.	
	15.020	greater than or equal to 90 dB above 5 uV (158 mV)		The amplitude of the R.F. signal shall be as specified.			The Amplitude shall be as specified.	greater than or equal to 90 dB above 5 uV (158 mV)

REV	TEST	SPECIFICATION			PROCEDURE			SPECIFICATION
LTR	NO.	OPR LIMITS	C	TEST DESCRIPTION	SWITCH POS	C	WORK STEPS	MFG LIMITS
	16.000			SIMULCOM Place holder for a feature to be added in the future	Test Setup #1		SIMULCOM	
A	17.000			Place holder for a feature to be added in the future. **TRANSMITTER TESTS:** **CAUTION:** DO NOT TRANSMIT UNTIL COM ANTENNA CABLE IS CONNECTED TO A SAFE LOAD CAPABLE OF DISSIPATING AT LEAST 50 WATTS	Test Setup # 2			

REV LTR	TEST NO.	SPECIFICATION OPR LIMITS	C	TEST DESCRIPTION	PROCEDURE SWITCH POS	C	WORK STEPS	SPECIFICATION MFG LIMITS
	18.000			OUTPUT POWER	Test Setup #2		OUTPUT POWER Connect per Figure # 3 MODULATION ANALYZER: RF LEVEL NOTE: All attenuation losses are to be calculated out of the power measurements for an accurate reading. The actual losses of the power attenuator and cable must be known and used when taking power readings. .	
				Channel the radio to 118.100. With no audio applied to COM-MIC-HI (P5-2), key the transmitter by grounding the VHF COM PTT line (P5-24).	<F> <118.100> <T>		Frequency 118.100 Key Transmitter Wait 10 seconds MODULATION ANALYZER: Note the power level for calculations.	
					<T>		Un-key transmitter	
	18.010	16 W min 30 W max		The R.F. output power at the VHF COM antenna connector shall be as specified. The transmitter must be keyed for at least 3 seconds for test 18.050 to be valid.			Calculate the output power using the meter reading and the attenuation losses. The results shall be as specified.	20.2 W min 28.5 W max

REV	TEST	SPECIFICATION			PROCEDURE			SPECIFICATION
LTR	NO.	OPR LIMITS	C	TEST DESCRIPTION	SWITCH POS	C	WORK STEPS	MFG LIMITS
				Channel the radio to 127.100. Ground the VHF COM PTT line (P5-24).	<F> <127.100> <T>		Frequency 127.100 Key Transmitter Wait 10 seconds <u>MODULATION ANALYZER:</u> Note the power level for calculations.	
					<T>		Un-key transmitter	
	18.020	16 W min 30 W max		The R.F. output power at the VHF COM antenna connector shall be as specified. The transmitter must be keyed for at least 3 seconds for test 18.050 to be valid.			Calculate the output power using the meter reading and the attenuation losses. The results shall be as specified.	20.2 W min 28.5 W max
				Channel the radio to 136.000. Ground the VHF COM PTT line (P5-24)	<F> <136.000> <T>		Frequency 136.000 Key Transmitter Wait 10 seconds <u>MODULATION ANALYZER:</u> Note the power level for calculations.	
					<T>		Un-key transmitter	
	18.030	16 W min 30 W max		The R.F. output power at the VHF COM antenna connector shall be as specified. The transmitter must be keyed for at least 3 seconds for test 18.050 to be valid.			Calculate the output power using the meter reading and the attenuation losses. The results shall be as specified.	20.2 W min 28.5 W max

REV	TEST	SPECIFICATION			PROCEDURE			SPECIFICATION
LTR	NO.	OPR LIMITS	C	TEST DESCRIPTION	SWITCH POS	C	WORK STEPS	MFG LIMITS
				Channel the radio to 151.800. Ground the VHF COM PTT line (P5-24)	<F> <151.800> <T>		Frequency 151.800 Key Transmitter Wait 10 seconds <u>MODULATION ANALYZER:</u> Note the power level for calculations. Un-key Transmitter	
					<T>			
A	18.040	16 W min 30 W max		The R.F. output power at the VHF COM antenna connector shall be as specified. The transmitter must be keyed for at least 3 seconds for test 18.050 to be valid			Calculate the output power using the meter reading and the attenuation losses. The results shall be as specified.	16.0 W min 28.5 W max
					<P> <M>		Page Menu Maintenance Menu	
	18.050	None		Maintenance Log. Place holder.			Error codes for current power on count.	
					<P> <R> <F> <127.100>		Page Menu RCB/ACH Page Frequency 127.100	

REV	TEST	SPECIFICATION			PROCEDURE			SPECIFICATION
LTR	NO.	OPR LIMITS	C	TEST DESCRIPTION	SWITCH POS	C	WORK STEPS	MFG LIMITS
	19.000			EXTENDED TRANSMISSIONS THE FOLLOWING TESTS ARE TIMED. IT IS INTENDED THESE THREE TESTS 19.010, 19.020 AND 19.030 ALL BE DONE IN ONE CONTINUOUS TRANSMISSION.	Test Setup # 2		EXTENDED TRANSMISSIONS Connect per Figure # 3 **THE FOLLOWING TESTS ARE TIMED. IT IS INTENDED THESE THREE TESTS 19.010, 19.020 AND 19.030 ALL BE DONE IN ONE CONTINUOUS TRANSMISSION. READ THROUGH THE TEST AND UNDERSTAND IT BEFORE CONTINUING!** NOTE: After keying the transmitter note the power readings at the times specified. Calculate the power for each reading after the 2-minute time limit is finished. NOTE: If the radio has been in transmit mode for 1 minute or longer the radio must be left in a non-transmit mode for 4 minutes before taking new power readings.	

REV	TEST	SPECIFICATION			PROCEDURE			SPECIFICATION
LTR	NO.	OPR LIMITS	C	TEST DESCRIPTION	SWITCH POS	C	WORK STEPS	MFG LIMITS
							MODULATION ANALYZER: (POWER METER) Measures the output power at the VHF COM antenna connector. Calculate the output power using the meter reading and the attenuation losses NOTE: All attenuation losses are to be calculated out of the power measurements for an accurate reading. The actual losses of the power attenuator and cable must be known and used when taking power readings. Correction factors for the power meter must be used.	
							START TIMER UPON KEYING TRANSMITTER	
				Channel the radio to 136.000. Key the transmitter by grounding the VHF COM PTT line (P5-2).	<F> <136.000> <T>		Frequency 136.000 Key Transmitter	

REV	TEST	SPECIFICATION			PROCEDURE			SPECIFICATION
LTR	NO.	OPR LIMITS	C	TEST DESCRIPTION	SWITCH POS	C	WORK STEPS	MFG LIMITS
	19.010	16 W min 30 W max		Within 15 seconds of keying the transmitter, the R.F. power at the antenna jack shall be as specified. After 90 ± 10 seconds of continuous transmitter operation measure the power output.			Within 15 seconds of keying the transmitter measure the output power. The power shall be as specified. At 90 ± 10 seconds of continuous transmitter operation take a power measurement from the MOD ANALYZER.	18 W min 28.5 W max
	19.020	13 W min 30 W max		The R.F. output power at the antenna jack shall be as specified. Monitor the RCB page, (RCB DATA) column “ACT CHANNEL” row, and “From COM” column; monitor values ‘T’ transmit, ‘R’ receive			The power shall be as specified. Monitor the RCB page, (RCB DATA) column “ACT CHANNEL” row, and “From COM” column; monitor values ‘T’ transmit, ‘R’ receive	14 W min 28.5 W max
	19.030	110 sec min 130 sec max		The radio shall automatically un-key the transmitter: Stop the timer when the RTIU value changes from ‘T’ to ‘R’. The timer should read as specified	<T> <F> <127.100>		Stop the timer when the RTIU value changes from ‘T’ to ‘R’. The timer should read as specified Un-key Transmitter Frequency 127.100	110 sec min 130 sec max

REV	TEST	SPECIFICATION			PROCEDURE			SPECIFICATION
LTR	NO.	OPR LIMITS	C	TEST DESCRIPTION	SWITCH POS	C	WORK STEPS	MFG LIMITS
	20.000			TRANSMIT INPUT CURRENT	Test Setup #2		TRANSMIT INPUT CURRENT	
							Connect per Figure # 3	
					<O>		COM ON/OFF: OFF	
							Remove 28-volt power plug and insert current meter in series with the high input line.	
							Reconnect 28-volt power plug to VDR.	
					<O> <T>		COM ON/OFF: ON Key Transmitter	
	20.010	less than or equal to 7.0 A		Channel the radio to 127.100 and key the transmitter. With no audio applied to the COM-MIC-HI (P5-2), measure the total input current on the +27.5 V dc line (J3-39, 59). The current shall be as specified.			Measure the total input current on the + 27.5 V dc line (A1A1P1-5 for -90X; J3-39, 59). The current shall be as specified.	less than or equal to 7.0 A
				Un-key the transmitter	<T> <O>		Un-key Transmitter COM ON/OFF: OFF	
							Remove the current meter from the 28 volt input line and reconnect 28-volt line to the VDR.	
					<O>		COM ON/OFF: ON	

REV	TEST	SPECIFICATION			PROCEDURE			SPECIFICATION
LTR	NO.	OPR LIMITS	C	TEST DESCRIPTION	SWITCH POS	C	WORK STEPS	MFG LIMITS
	21.000			FREQUENCY TOLERANCE	Test Setup #2		FREQUENCY TOLERANCE Connect per Figure # 3 MODULATION ANALYZER: Set to measure frequency.	
				Channel the radio to 120.00 MHz and key the transmitter.	<F> <120.000> <T>		Frequency 120.000 Key Transmitter	
	21.010	120.00 ± 0.0006 MHz		With no audio applied to the COM-MIC-HI (P5-2), measure the output frequency. The frequency shall be as specified.			MODULATION ANALYZER: Measure the transmitter output frequency. The frequency shall be as specified.	120.00 ± 0.0006 MHz
					<T>		Un-key Transmitter	
					<F> <127.100>		Frequency 127.100	

REV LTR	TEST NO.	SPECIFICATION OPR LIMITS	C	TEST DESCRIPTION	PROCEDURE SWITCH POS	C	WORK STEPS	SPECIFICATION MFG LIMITS
	22.000			MIC AND ACARS-DATA-IN LEVEL	Test Setup #2		MIC AND ACARS-DATA-IN LEVEL	
							Connect per Figure # 3	
				MIC LEVEL			MIC LEVEL	
							NOTE: The MIC level input must be set prior to taking the modulation reading. The level is set with the unit transmitting.	
							DVM:	
							Connect DVM to COM-MIC-HI (R.T.I.U. J2V3/J2M6). Set DVM to read millivolts AC.	
							AUDIO ANALYZER:	
							Connect the audio analyzer output to the R.T.I.U. audio input jack. Set the analyzer frequency for 1000 Hz, 1 VAC.	
				Channel the radio to 127.100. Apply a 145 mVrms, 1 kHz tone to COM-MIC-HI (P5-2) and key the transmitter.	<T>		Key Transmitter	
							AUDIO ANALYZER:	
							Adjust the output voltage until the DVM reads 145 mVrms.	
					<T>		Un-key Transmitter	
							MODULATION ANALYZER:	
							Set the modulation analyzer to measure AM modulation.	
					<T>		Key Transmitter	

REV	TEST	SPECIFICATION			PROCEDURE			SPECIFICATION
LTR	NO.	OPR LIMITS	C	TEST DESCRIPTION	SWITCH POS	C	WORK STEPS	MFG LIMITS
	22.010	less than or equal to 80%		Measure the modulation level. The level shall be as specified.			MODULATION ANALYZER: Measure both the (pos.) and (neg.) modulation peaks and take the average. The Modulation shall be as specified.	45% to 55%
					<T>		UN-KEY THE TRANSMITTER	
A				The following test applies to –8x3 units only				
				Change to DATA mode.	<V> <D>		Voice Data Selection Data	
				Apply a 145 mVrms, 1 kHz tone to the COM-MIC-HI (P5-2) and key the transmitter.	<T>		Key Transmitter AUDIO ANALYZER: Adjust the output voltage until the DVM reads 145 mVrms.	
							MODULATION ANALYZER:	
	22.020	less than or equal to 2%		Measure the modulation level. The level shall be as specified.			Measure both (pos.) and (neg.) modulation peaks and take the average. The modulation shall be as specified.	less than or equal to 2%
					<T>		Un-key Transmitter	

REV	TEST	SPECIFICATION			PROCEDURE			SPECIFICATION
LTR	NO.	OPR LIMITS	C	TEST DESCRIPTION	SWITCH POS	C	WORK STEPS	MFG LIMITS
	23.000			VOICE AND DATA MODULATION LEVEL	Test Setup #2		VOICE AND DATA MODULATION LEVEL	
							Connect per Figure # 3	
				VOICE MODULATION LEVEL			VOICE MODULATION LEVEL	
							DVM:	
							Connect DVM to COM-MIC-HI (R.T.I.U. J2V3/J2M6). Set DVM to measure Vrms.	
							AUDIO ANALYZER:	
							Connect the audio analyzer output to the R.T.I.U. audio input jack.	
							NOTE: The MIC level input must be set prior to taking the modulation reading. The level is set with the unit transmitting	
				Channel the radio to 127.100. Apply a 400 mVrms, 1 kHz to the COM-MIC-HI (P5-2) and key the transmitter.	<T>		Key Transmitter.	
							AUDIO ANALYZER:	
							Set the audio analyzer for 1000 Hz output.	
							While monitoring the DVM adjust the audio analyzer output voltage until the DVM reads 400 mVrms.	
					<T>		Un-Key transmitter	
					<T>		Key Transmitter	

REV LTR	TEST NO.	SPECIFICATION OPR LIMITS	C	TEST DESCRIPTION	PROCEDURE SWITCH POS	C	WORK STEPS	SPECIFICATION MFG LIMITS
	23.010	75% to 95%		The modulation level shall be as specified.			MODULATION ANALYZER: Measure the (pos.) and (neg.) peak values. The average of these two readings will be as specified.	80% to 90%
				Un-key the transmitter.	<T>		Un-key Transmitter	
				Channel radio to 118.100. Apply a 400 mVrms, 1 kHz tone to COM-MIC-HI (P5-2) and key the transmitter.	<F> <118.100>		Frequency 118.100	
					<T>		Key Transmitter.	
	23.020	75% to 95%		The modulation level shall be as specified.			MODULATION ANALYZER: Measure the (pos.) and (neg.) peak values. The average of these two readings will be as specified.	75% to 95%
					<T>		Un-key Transmitter	
				Channel the radio to 136.000. Apply a 400 mVrms, 1 kHz tone to COM-MIC-HI (P5-2) and key the transmitter.	<F> <136.000>		Frequency 136.000	
					<T>		Key Transmitter.	
	23.030	75% to 95%		The modulation level shall be as specified.			MODULATION ANALYZER: Measure the (POS.) and (NEG) peak values. The average of these two readings will be as specified.	75% to 95%
					<T>		Un-Key Transmitter	

REV	TEST	SPECIFICATION			PROCEDURE			SPECIFICATION
LTR	NO.	OPR LIMITS	C	TEST DESCRIPTION	SWITCH POS	C	WORK STEPS	MFG LIMITS
				Channel the radio to 127.100.	<F> <127.100>		Frequency 127.100	
				Apply a 550 mVrms, 1 kHz to the COM-MIC-HI (P5-2) and key the transmitter.	<T>		Key Transmitter <u>AUDIO ANALYZER:</u> Set the audio analyzer for 1000 Hz output. While monitoring the DVM adjust the audio analyzer output voltage until the DVM reads 550 mVrms.	
					<T>		Un-key Transmitter	
					<T>		Key Transmitter	
	23.040	less than or equal to 5%		The difference in modulation depth between 23.010 and 23.040 shall be as specified.			<u>MODULATION ANALYZER:</u> Measure the (POS.) and (NEG) peak values. The difference between the average of these two readings and that observed in 23.010 shall be as specified.	less than or equal to 5%
					<T>		Un-key Transmitter	
				<u>DATA MODULATION LEVEL</u> Place holder for future data modulation level tests			<u>DATA MODULATION LEVEL</u>	

REV LTR	TEST NO.	SPECIFICATION OPR LIMITS	C	TEST DESCRIPTION	PROCEDURE SWITCH POS	C	WORK STEPS	SPECIFICATION MFG LIMITS
	24.000			SIDETONE LEVEL	Test Setup #2		SIDETONE LEVEL Connect per Figure # 3 DVM: Connect DVM to R.T.I.U. (J2V3/J2M6) COM-MIC-HI AUDIO ANALYZER: Connect the audio analyzer output to the R.T.I.U. audio input. AUDIO ANALYZER: Connect the audio analyzer input to the R.T.I.U. front panel (J2V5/J2U5). Adjust the audio analyzer frequency for 1000 Hz.	
				Channel the radio to 127.100. Apply a 400 mVrms, 1 kHz tone to the COM-MIC-HI (P5-2). Key the transmitter.	<T>		Key Transmitter AUDIO ANALYZER: While monitoring the DVM adjust the audio analyzer output for 400 mVrms.	
					<T>		Un-Key Transmitter	
					<T>		Key Transmitter	
	24.010	0.71 ± 0.3 Vrms		Measure the audio output level at NAV/COM-AUDIO + (P5-62). The level shall be as specified.			AUDIO ANALYZER: Measure the audio level at NAV/COM-AUDIO + (R.T.I.U. J2V5/J2U5). The level shall read as specified.	0.71 ± 0.03 Vrms
					<T>		Un-key Transmitter	

REV LTR	TEST NO.	SPECIFICATION OPR LIMITS	C	TEST DESCRIPTION	PROCEDURE SWITCH POS	C	WORK STEPS	SPECIFICATION MFG LIMITS
	25.000			SIDETONE DISTORTION	Test Setup #2		SIDETONE DISTORTION Connect per Figure # 3 DVM: Connect DVM to R.T.I.U. (J2V3/J2M6) set for Vrms. AUDIO ANALYZER: Connect Audio analyzer output to R.T.I.U. audio input jack. AUDIO ANALYZER: Set frequency output for 1000 Hz. Connect the audio analyzer input to the R.T.I.U. front panel (J2V5/J2U5). Set the audio analyzer to measure distortion.	
				Channel the radio to 127.100. Key the transmitter. Apply a 250 mVrms, 1 kHz tone to COM-MIC-HI (P5-2).	<T>		Key Transmitter AUDIO ANALYZER: Monitor the DVM and adjust the voltage output for 250 mVrms.	
					<T>		Un-key Transmitter	
					<T>		Key Transmitter	
	25.010	Less than or equal to 10%		Measure the audio distortion at NAV/COM-AUDIO + (P5-62). The distortion shall be as specified.			AUDIO ANALYZER: Measure the NAV/COM-AUDIO + (R.T.I.U. J2V5/J2U5. The distortion shall be as specified.	Less than or equal to 10%
					<T>		Un-key Transmitter	

REV LTR	TEST NO.	SPECIFICATION OPR LIMITS	C	TEST DESCRIPTION	PROCEDURE SWITCH POS	C	WORK STEPS	SPECIFICATION MFG LIMITS
	26.000			VOICE AND ACARS DATA MODULATION DISTORTION	Test Setup #2		VOICE AND ACARS DATA MODULATION DISTORTION	
							Connect per Figure # 4	
				VOICE MODULATION DISTORTION			VOICE MODULATION DISTORTION	
							DVM:	
							Connect DVM to R.T.I.U. (J2V3/J2M6) set for Vrms.	
							MODULATION ANALYZER:	
							Connect the DEMOD output to the Audio Analyzer input.	
							AUDIO ANALYZER:	
							Connect Audio analyzer output to R.T.I.U. audio input jack.	
							Set frequency output for 1000 Hz.	
							Set the audio analyzer to measure distortion.	
				Channel the radio to 127.100. Key the transmitter. Apply a 250 mVrms, 1 kHz tone to COM-MIC-HI (P5-2).	<T>		Key Transmitter	
							DVM:	
							Monitor the DVM and adjust the voltage output for 250 mVrms.	
					<T>		Un-key Transmitter	
					<T>		Key Transmitter	

REV	TEST	SPECIFICATION			PROCEDURE			SPECIFICATION
LTR	NO.	OPR LIMITS	C	TEST DESCRIPTION	SWITCH POS	C	WORK STEPS	MFG LIMITS
	26.010	Less than or equal to 10%		The combined noise and distortion in the demodulated output of the transmitter shall be as specified.			AUDIO ANALYZER: Measure the combined noise and distortion in the demodulated output of the transmitter. Shall be as specified.	Less than or equal to 10%
					<T>		Un-key Transmitter	
				Apply a 300 Hz tone.			AUDIO ANALYZER: Change audio analyzer frequency output to 300 Hz.	
				Key the transmitter. Apply a 250 mVrms, 300 Hz tone to COM-MIC-HI (P5-2).	<T>		Key Transmitter AUDIO ANALYZER: Monitor the DVM and adjust the voltage output for 250 mVrms.	
					<T>		Un-key Transmitter	
					<T>		Key Transmitter	
	26.020	Less than or equal to 10%		Measure the combined distortion and noise in the demodulated output of the transmitter at modulation frequency 300 Hz.			AUDIO ANALYZER: Measure the combined noise and distortion in the demodulated output of the transmitter. Shall be as specified.	Less than or equal to 10%
					<T>		Un-key Transmitter	
				Apply a 3000 Hz tone.			AUDIO ANALYZER: Change audio analyzer frequency output to 3000 Hz.	
				Key the transmitter. Apply a 250 mVrms, 3 kHz tone to COM-MIC-HI (P5-2).	<T>		Key Transmitter AUDIO ANALYZER: Monitor the DVM and adjust the voltage output for 250 mVrms.	

REV	TEST	SPECIFICATION			PROCEDURE			SPECIFICATION
LTR	NO.	OPR LIMITS	C	TEST DESCRIPTION	SWITCH POS	C	WORK STEPS	MFG LIMITS
					<T>		Un-key Transmitter	
					<T>		Key Transmitter	
	26.030	Less than or equal to 10%		Measure the combined distortion and noise in the demodulated output of the transmitter at modulation frequency 3000 Hz.			AUDIO ANALYZER: Measure the combined noise and distortion in the demodulated output of the transmitter. Shall be as specified.	Less than or equal to 10%
					<T>		Un-key Transmitter	
				DATA MODULATION DISTORTION Place holder for future test			DATA MODULATION DISTORTION	

REV	TEST	SPECIFICATION			PROCEDURE			SPECIFICATION
LTR	NO.	OPR LIMITS	C	TEST DESCRIPTION	SWITCH POS	C	WORK STEPS	MFG LIMITS
	27.000			AUDIO FREQUENCY RESPONSE WIDEBAND & NARROWBAND	Test Setup #2		AUDIO FREQUENCY RESPONSE WIDEBAND & NARROWBAND Connect per Figure # 3 DVM: Connect DVM to R.T.I.U. J2V3/J2M6. Set DVM to measure Vrms. AUDIO ANALYZER: Connect audio analyzer output to R.T.I.U. audio input jack. Set frequency output to 300 Hz.	
				Channel the radio to 127.100. Key transmitter. Apply a 50 mVrms, 300 Hz tone to COM-MIC-HI (P5-2).	<T>		Key Transmitter AUDIO ANALYZER: While monitoring the DVM adjust the voltage output of the audio analyzer for 50 mVrms on the DVM.	
					<T>		UN-KEY THE TRANSMITTER	
					<T>		Key Transmitter	

REV	TEST	SPECIFICATION			PROCEDURE			SPECIFICATION
LTR	NO.	OPR LIMITS	C	TEST DESCRIPTION	SWITCH POS	C	WORK STEPS	MFG LIMITS
	27.010	REFERENCE		Measure and record modulation level			MODULATION ANALYZER:	REFERENCE
							Measure the modulation level. Record for reference.	
					<T>		Un-key Transmitter	
							AUDIO ANALYZER:	
							Set frequency output to 1000 Hz.	
				Key transmitter. Apply a 50 mVrms, 1000 Hz tone to COM-MIC-HI (P5-2).	<T>		Key Transmitter AUDIO ANALYZER:	
							While monitoring the DVM adjust the voltage output of the audio analyzer for 50 mVrms on the DVM.	
					<T>		Un-key Transmitter	
					<T>		Key Transmitter	
	27.020	REFERENCE		Change the modulation frequency to 1 kHz and measure the modulation level.			MODULATION ANALYZER:	REFERENCE
							Measure the modulation level and record for reference.	
					<T>		Un-key Transmitter	
							AUDIO ANALYZER:	
							Set the frequency output to 3000 Hz.	
				Key transmitter. Apply a 50 mVrms, 3000 Hz tone to COM-MIC-HI (P5-2).	<T>		Key Transmitter AUDIO ANALYZER:	
							While monitoring the DVM adjust the voltage output of the audio analyzer for 50 mVrms on the DVM.	
					<T>		Un-key Transmitter	
					<T>		Key Transmitter	

REV	TEST	SPECIFICATION			PROCEDURE			SPECIFICATION
LTR	NO.	OPR LIMITS	C	TEST DESCRIPTION	SWITCH POS	C	WORK STEPS	MFG LIMITS
	27.030	REFERENCE		Change the modulation frequency to 3 kHz and measure the modulation level.			MODULATION ANALYZER: Measure the modulation level and record for reference.	REFERENCE
					<T>		Un-key Transmitter	
	27.040	Less than or equal to 6 dB		The variation in modulation level from the highest to the lowest level measured in (27.010, 27.020, 27.030) shall be as specified.			Calculate the variation in dB from the highest to lowest level in tests (27.010, 27.020, and 27.030). The variation from highest to lowest level shall be as specified.	Less than or equal to 6 dB
				Channel the radio to 127.105.	<F> <127.105>		Frequency 127.105 AUDIO ANALYZER: Set the frequency output to 300 Hz.	
				Key the transmitter and apply a 50 mVrms, 300 Hz tone to COM-MIC-HI (P5-2).	<T>		Key Transmitter AUDIO ANALYZER: While monitoring the DVM, adjust the voltage output of the audio analyzer for 50 mVrms on the DVM.	
					<T>		Un-key Transmitter	
					<T>		Key Transmitter	
	27.050	REFERENCE		Measure and record the modulation level.			MODULATION ANALYZER: Measure the modulation level. Record for reference.	REFERENCE
					<T>		Un-key Transmitter.	

REV	TEST	SPECIFICATION			PROCEDURE			SPECIFICATION
LTR	NO.	OPR LIMITS	C	TEST DESCRIPTION	SWITCH POS	C	WORK STEPS	MFG LIMITS
							AUDIO ANALYZER: Set frequency output to 1000 Hz.	
				Key the transmitter and apply a 50 mVrms, 1000 Hz tone to COM-MIC-HI (P5-2).	<T>		AUDIO ANALYZER: While monitoring the DVM adjust the voltage output of the audio analyzer for 50 mVrms on the DVM.	
					<T>		Un-key Transmitter	
					<T>		Key Transmitter	
	27.060	REFERENCE		Change the modulation frequency to 1 kHz and measure the modulation level.			MODULATION ANALYZER: Measure the modulation level and record for reference.	REFERENCE
					<T>		Un-key Transmitter	
							AUDIO ANALYZER: Set the frequency output to 2500 Hz.	
				Key the transmitter and apply a 50 mVrms, 2500 Hz tone to COM-MIC-HI (P5-2).	<T>		AUDIO ANALYZER: While monitoring the DVM adjust the voltage output of the audio analyzer for 50 mVrms on the DVM.	
					<T>		Un-key Transmitter	
					<T>		Key Transmitter	
	27.070	REFERENCE		Change the modulation frequency to 2.5 kHz and measure the modulation level.			MODULATION ANALYZER: Measure the modulation level and record for reference.	REFERENCE
					<T>		Un-key Transmitter	

REV	TEST	SPECIFICATION			PROCEDURE			SPECIFICATION
LTR	NO.	OPR LIMITS	C	TEST DESCRIPTION	SWITCH POS	C	WORK STEPS	MFG LIMITS
	27.080	Less than or equal to 6 dB		The variation in modulation level from the highest to the lowest level measured in (27.050, 25.060, 25.070) shall be as specified.			Calculate the variation in dB from the highest to lowest level in tests (27.050, 27.060, and 27.070). The variation from highest to lowest level shall be as specified.	Less than or equal to 6 dB
							AUDIO ANALYZER:	
							Set the frequency output to 3000 Hz.	
				Key the transmitter and apply a 50 mVrms, 3000 Hz tone to COM-MIC-HI (P5-2).	<T>		AUDIO ANALYZER:	
							While monitoring the DVM adjust the voltage output of the audio analyzer for 50 mVrms on the DVM.	
					<T>		Un-key Transmitter	
					<T>		Key Transmitter	
	27.090	REFERENCE		Change the modulation frequency to 3.0 kHz and measure the modulation level.			MODULATION ANALYZER:	REFERENCE
							Measure the modulation level and record for reference.	
					<T>		Un-key Transmitter	
A	27.100	Greater than or equal to 18 dB		The variation in the modulation level of 27.090 compared to the level in 25.060 shall be as specified.			Calculate the variation in dB between the level in test 27.090 compared to the level in 27.060. The variation shall be as specified.	Greater than or equal to 18 dB
					<F> <127.100>		Frequency 127.100	

REV	TEST	SPECIFICATION			PROCEDURE			SPECIFICATION
LTR	NO.	OPR LIMITS	C	TEST DESCRIPTION	SWITCH POS	C	WORK STEPS	MFG LIMITS
	28.000			ACARS-DATA-IN FREQUENCY AND PHASE RESPONSE Place holder for future test			ACARS-DATA-IN FREQUENCY AND PHASE RESPONSE	
	29.000			CARRIER NOISE LEVEL	Test Setup #2		CARRIER NOISE LEVEL Connect per Figure # 4 DVM: Connect the DVM to the R.T.I.U. J2V3/J2M6. Set the DVM to measure Vrms. AUDIO ANALYZER: Set the audio analyzer for 1000 Hz frequency output. Set analyzer to measure ((S+N)/N). Connect to the R.T.I.U. audio input jack.	
				Key transmitter and apply a 250 mVrms, 1000 Hz tone to COM-MIC-HI (P5-2).	<T>		Key Transmitter AUDIO ANALYZER: While monitoring the DVM adjust the audio output voltage for 250 mVrms on the DVM. Set the audio analyzer to measure dB.	
					<T>		Un-key Transmitter	

REV	TEST	SPECIFICATION			PROCEDURE			SPECIFICATION
LTR	NO.	OPR LIMITS	C	TEST DESCRIPTION	SWITCH POS	C	WORK STEPS	MFG LIMITS
							MODULATION ANALYZER:	
							(HP8901A)	
							Apply a 15 kHz, LP Filter. Set the modulation analyzer to measure (AM). (ENTER 2.2 SPCL) Non-autoranging.	
							Connect the Modulation Analyzer demodulated output to the audio analyzer input.	
					<T>		Key Transmitter	
	29.010	Greater than or equal to 50 dB		Measure the demodulated audio level with the audio signal applied and removed ((S+N)/N). The ((S+N)/N) shall be as specified.			AUDIO ANALYZER:	Greater than or equal to 50 dB
							Measure the demodulated audio level. The transmitter output ((S+N)/N) ratio shall be as specified.	
					<T>		Un-key Transmitter	
							MODULATION ANALYZER:	
							(HP8901A)	
							ENTER AUTOMATIC OPERATION.	

REV LTR	TEST NO.	SPECIFICATION OPR LIMITS	C	TEST DESCRIPTION	PROCEDURE SWITCH POS	C	WORK STEPS	SPECIFICATION MFG LIMITS
	30.000			RESIDUAL FREQUENCY MODULATION	Test Setup #2		RESIDUAL FREQUENCY MODULATION Connect per Figure # 3 DVM: Connect the DVM to R.T.I.U. J2V3/J2M6. Set the DVM to measure Vrms.	
				Channel the radio to 118.100.	<F> <118.100>		Frequency 118.100 AUDIO ANALYZER: Connect the audio analyzer output to the R.T.I.U. audio input jack. Set the audio analyzer output for 1000 Hz.	
				Key the transmitter. Apply a 145 mVrms, 1 kHz tone to COM-MIC-HI (P5-2).	<T>		Key Transmitter AUDIO ANALYZER: While monitoring the DVM adjust the audio analyzer output for 145 mVrms on the DVM.	
					<T>		Un-key Transmitter MODULATION ANALYZER: Set the modulation analyzer to measure (FM).	
					<T>		Key Transmitter	

REV	TEST	SPECIFICATION			PROCEDURE			SPECIFICATION
LTR	NO.	OPR LIMITS	C	TEST DESCRIPTION	SWITCH POS	C	WORK STEPS	MFG LIMITS
	30.010	less than or equal to 1000 Hz		The peak frequency deviation shall be as specified.			MODULATION ANALYZER: Measure the (FM) frequency. The frequency shall be as specified.	Less than or equal to 1000 Hz.
					<T>		Un-key Transmitter	
				Change the radio channel to 128.000.	<F> <128.000>		Frequency 128.000	
				Key the transmitter.	<T>		Key Transmitter	
	30.020	Less than or equal to 1000 Hz		The peak frequency deviation shall be as specified.			MODULATION ANALYZER: Measure the (FM) frequency. The frequency shall be as specified.	Less than or equal to 1000 Hz
					<T>		Un-key Transmitter	
				Change the radio channel to 136.000.	<F> <136.000>		Frequency 136.000	
				Key the transmitter.	<T>		Key Transmitter	
	30.030	Less than or equal to 1000 Hz		The peak frequency deviation shall be as specified.			MODULATION ANALYZER: Measure the (FM) frequency. The frequency shall be as specified.	Less than or equal to 1000 Hz
					<T>		Un-key Transmitter	
					<F> <118.100>		Frequency 118.100	

REV LTR	TEST NO.	SPECIFICATION OPR LIMITS	C	SPECIFICATION TEST DESCRIPTION	PROCEDURE SWITCH POS	C	PROCEDURE WORK STEPS	SPECIFICATION MFG LIMITS
	31.000			SPURIOUS R.F. EMISSIONS THIS TEST MANDATORY ONLY FOR ORIGINAL MANUFACTURING TEST.	Test Setup #3		SPURIOUS R.F. EMISSIONS Connect per Figure # 5 Disconnect the antenna port from the modulation analyzer. AUDIO ANALYZER: Output voltage to zero (0) V ac. SPECTRUM ANALYZER: Connect the spectrum analyzer to the VHF COM antenna connector through two (2) 20 dB power attenuators. Adjust the analyzer attenuation to 20 dB.	
					<T>		Key Transmitter SPECTRUM ANALYZER: Adjust spectrum analyzer for the R.F. level of the carrier to the top of the screen.	
					<T>		Un-key Transmitter SPECTRUM ANALYZER: Insert the trap after the pads. Adjust analyzer attenuation to 0 dB.- DO NOT REMOVE POWER PADS	

REV	TEST	SPECIFICATION			PROCEDURE			SPECIFICATION
LTR	NO.	OPR LIMITS	C	TEST DESCRIPTION	SWITCH POS	C	WORK STEPS	MFG LIMITS
							DVM Connect DVM to the R.T.I.U. (J2V3/J2M6) COM-MIC-HI. Set DVM to read V ac.	
				Channel the radio to 118.100. Key the transmitter with a 145 mVrms 1 kHz audio signal applied to COM-MIC-HI (P5-2).	<T>		Key Transmitter AUDIO ANALYZER: While monitoring the DVM adjust the audio analyzer output for 145 mVrms on the DVM.	
					<T>		Un-Key Transmitter	
					<T>		Key Transmitter	
	31.010	Less than -70 dBc for harmonics not between 1015 and 1045 MHz		Verify that the levels of harmonic and spurious signals coming from the VHF COM antenna connector are as specified.			SPECTRUM ANALYZER: Adjust the trap until the analyzer shows minimum carrier level. Verify the spurious and harmonics outside the 1015 and 1045 MHz frequency range. Shall be as specified.	Less than-70 dBc for harmonics not between 1015 and 1045 MHz

REV	TEST	SPECIFICATION			PROCEDURE			SPECIFICATION
LTR	NO.	OPR LIMITS	C	TEST DESCRIPTION	SWITCH POS	C	WORK STEPS	MFG LIMITS
	31.020	Less than -90 dBc for harmonics between 1015 and 1045 MHz and all non-harmonic spurious signals					Verify the spurious and harmonics between the 1015 and 1045 MHz frequency range. Shall be as specified.	Less than -90 dBc for harmonics between 1015 and 1045 MHz and all non-harmonic spurious signals.
					<T>		Un-key Transmitter	
							Remove trap. Set input attenuation for 20-dB input.	
							AUDIO ANALYZER:	
							Set output for 0 Vrms.	
				Channel radio to 128.000.	<F> <128.000>		Frequency 128.000	
					<T>		Key Transmitter. Adjust the R.F. level for the carrier to the top of the screen.	
					<T>		Un-key Transmitter.	
							SPECTRUM ANALYZER:	
							Insert trap.	
					<T>		Key Transmitter.	
							AUDIO ANALYZER:	
							While monitoring the DVM adjust the audio analyzer output for 145 mVrms on the DVM.	
					<T>		Un-Key Transmitter	
					<T>		Key Transmitter	

REV	TEST	SPECIFICATION			PROCEDURE			SPECIFICATION
LTR	NO.	OPR LIMITS	C	TEST DESCRIPTION	SWITCH POS	C	WORK STEPS	MFG LIMITS
							SPECTRUM ANALYZER: Set analyzer attenuation to zero (0). Tune trap for min carrier level.	
	31.030	Less than -70 dBc for harmonics not between 1015 and 1045 MHz		With the radio tuned to 128.000. Verify that the levels of harmonic and spurious signals coming from the VHF COM antenna connector are as specified.			SPECTRUM ANALYZER: Read and record the level of harmonics and spurious shall be as specified.	Less than -70 dBc for harmonics not between 1015 and 1045 MHz
	31.040	Less than -90 dBc for harmonics between 1015 and 1045 MHz and all non-harmonic spurious signals					SPECTRUM ANALYZER: Read and record the level of harmonics and spurious shall be as specified.	Less than -90 dBc for harmonics between 1015 and 1045 MHz and all non-harmonic spurious signals
					<T>		Un-key Transmitter Remove trap. Set input attenuation for 20-dB input. AUDIO ANALYZER: Set output for 0 Vrms.	
				Channel radio to 136.000.	<F> <136.000> <T> <T>		Frequency 136.000 Key Transmitter Adjust the R.F. level for the carrier to the top of the screen. Un-key Transmitter SPECTRUM ANALYZER: Insert trap.	

REV LTR	TEST NO.	SPECIFICATION OPR LIMITS	C	TEST DESCRIPTION	PROCEDURE SWITCH POS	C	WORK STEPS	SPECIFICATION MFG LIMITS
					<T>		Key Transmitter. AUDIO ANALYZER: While monitoring the DVM adjust the audio analyzer output for 145 mVrms on the DVM. SPECTRUM ANALYZER: Set analyzer attenuation to zero (0). Tune trap for min carrier level.	
	31.050	Less than -70 dBc for harmonics not between 1015 and 1045 MHz		With the radio tuned to 136.000. Verify that the levels of harmonic and spurious signals coming from the VHF COM antenna connector are as specified.			SPECTRUM ANALYZER: Read and record the level of harmonics and spurious shall be as specified.	Less than -70 dBc for harmonics not between 1015 and 1045 MHz
	31.060	Less than -90 dBc for harmonics between 1015 and 1045 MHz and all non-harmonic spurious signals					SPECTRUM ANALYZER: Read and record the level of harmonics and spurious shall be as specified.	Less than -90 dBc for harmonics between 1015 and 1045 MHz and all non-harmonic spurious signals
					<T>		Un-key Transmitter SPECTRUM ANALYZER: Set analyzer attenuator to 20 dB and remove trap.	
					<F> <127.500>		Frequency 127.500	

REV	TEST	SPECIFICATION			PROCEDURE			SPECIFICATION
LTR	NO.	OPR LIMITS	C	TEST DESCRIPTION	SWITCH POS	C	WORK STEPS	MFG LIMITS
	32.000			PHONE AUDIO OUTPUT	Test Setup #1		PHONE AUDIO OUTPUT Connect per Figure # 2 SIGNAL GENERATOR: Set signal generator for 127.500 MHz, 1000 uV R.F. output, 1 kHz, 30% A.M. modulation. AUDIO ANALYZER: (DVM or Oscilloscope) Set Audio analyzer to measure Vrms. Connect analyzer to R.T.I.U. audio output jack.	
				Verify that the Receiver and Side tone audio is properly steered to the three phone audio outputs.	<P> <A> <A> <B>		Page Menu Audio/Analog Page Audio Output Phone	
	32.010	Greater than or equal to 800 mVrms		With the radio receiving a standard modulated signal, the NAV/COM-PHONE-AUDIO-HI (P5-25) with respect to COM PH AUD LO (P5-5) shall be as specified.	<A> <C>		AUDIO ANALYZER: Measure the output of the R.T.I.U. audio jack NAV/COM-PHONE-AUDIO-HI [R.T.I.U. J2T5/J2S5]. The output shall be as specified. Audio Output Sidetone	Greater than or equal to 800 mVrms
	32.020	Less than or equal to 80 mVrms		With the radio receiving a standard modulated signal, the SIDE TONE PH AUD (P5-7) with respect to COM PH AUD LO (P5-5) shall be as specified.	<A> <D>		AUDIO ANALYZER: Measure the output of the R.T.I.U. audio jack SIDE TONE PH AUD. [R.T.I.U. J2P2/J2N2]. The output shall be as specified. Audio Output Rec-Phone	Less than or equal to 80 mVrms

REV	TEST	SPECIFICATION			PROCEDURE			SPECIFICATION
LTR	NO.	OPR LIMITS	C	TEST DESCRIPTION	SWITCH POS	C	WORK STEPS	MFG LIMITS
H	32.030	Greater than or equal to 800 mVrms		With the radio receiving a standard modulated signal, the REC-PHONE-AUDIO (P5-27) with respect to COM PH AUD LO (P5-5) shall be as specified.			AUDIO ANALYZER: Measure the output of the R.T.I.U. audio jack REC-PHONE AUDIO [R.T.I.U. J2S2/J2R2]. The output shall be as specified.	Greater than or equal to 800 mVrms
					<P> <R>		Page Menu RCB/ACH Page	
							CONNECT UUT PER FIGURE # 3	
							AUDIO ANALYZER:	
							Connect the audio analyzer output to the R.T.I.U. audio input jack.	
							Set audio output frequency to 1000 Hz.	
							Connect audio analyzer input to the R.T.I.U. audio output jack. Set the analyzer to measure Vrms.	
					<F> <127.100>		Frequency 127.100	
							DVM	
							Connect the DVM to R.T.I.U. J2V3/J2M6 (COM-MIC-HI).	
					<T>		Key Transmitter	
							Monitor the DVM while adjusting the audio analyzer output. Adjust the analyzer output for the DVM to read 400 mVrms.	
					<T>		Un-key Transmitter	

REV	TEST	SPECIFICATION			PROCEDURE			SPECIFICATION
LTR	NO.	OPR LIMITS	C	TEST DESCRIPTION	SWITCH POS	C	WORK STEPS	MFG LIMITS
					<P> <A> <A> <B> <T>		Page Menu Audio/Analog Page Audio Output Phone Key Transmitter	
	32.040	Greater than or equal to 800 mVrms		With the radio transmitting a standard modulated signal, the NAV/COM-PHONE-AUDIO-HI (P5-25) with respect to the COM PH AUD LO (P5-5) shall be as specified.	 <T> <A> <C> <T>		<u>AUDIO ANALYZER:</u> Measure the output of the R.T.I.U. audio jack NAV/COM-PHONE-AUDIO-HI [R.T.I.U. J2T5/J2S5]. Shall be as specified. Un-key Transmitter Audio Output Sidetone Key Transmitter	Greater than or equal to 800 mVrms
	32.050	Greater than or equal to 800 mVrms		With the radio transmitting a standard modulated signal the SIDE TONE PH AUD (P5-7) with respect to the COM PH AUD LO (P5-5) shall be as specified.	 <T> <A> <D> <T>		<u>AUDIO ANALYZER:</u> Measure the output of the R.T.I.U. audio jack SIDE TONE PH AUD [R.T.I.U. J2P2/J2N2]. Shall be as specified. Un-Key Transmitter Audio Output Rec-Phone Key Transmitter	Greater than or equal to 800 mVrms

REV	TEST	SPECIFICATION			PROCEDURE			SPECIFICATION
LTR	NO.	OPR LIMITS	C	TEST DESCRIPTION	SWITCH POS	C	WORK STEPS	MFG LIMITS
	32.060	Less than or equal to 80 mVrms		With the radio transmitting a standard modulated signal the REC-PHONE-AUD (P5-27) with respect to COM PH AUD LO (P5-5) shall be as specified.			AUDIO ANALYZER: Measure the output of the R.T.I.U. audio jack REC-PHONE-AUDIO [R.T.I.U. J2S2/J2R2]. Shall be as specified.	Less than or equal to 80 mVrms
					<T>		Un-Key Transmitter	
					<A> <F> <P> <R>		Audio Output None Page Menu RCB/ACH Page	
							AUDIO ANALYZER: REMOVE SIGNAL FROM R.T.I.U. AUDIO INPUT JACK.	

REV	TEST	SPECIFICATION			PROCEDURE			SPECIFICATION
LTR	NO.	OPR LIMITS	C	TEST DESCRIPTION	SWITCH POS	C	WORK STEPS	MFG LIMITS
	33.000			MICROPH0NE BIAS	Test Setup #2		MICROPH0NE BIAS Connect per Figure # 3 AUDIO ANALYZER: (DVM) Set audio analyzer to measure V dc. Connect to the R.T.I.U. J2V3 (H) and 28 RTN T.P. (L).	
					<T>		Key Transmitter	
	33.010	3.4 ± 1.1 V dc		Set the radio to channel 127.100. Key the transmitter. The voltage at COM-MIC-HI (P5-2) with a 150 ohm load to ground shall be as specified.			AUDIO ANALYZER: (DVM) The voltage measured shall be as specified.	3.4 ± 1.1 V dc
					<T>		Un-key Transmitter	
					<F> <127.500>		Frequency 127.500	

REV LTR	TEST NO.	SPECIFICATION OPR LIMITS	C	TEST DESCRIPTION	PROCEDURE SWITCH POS	C	WORK STEPS	SPECIFICATION MFG LIMITS
	34.000			OVERVOLTAGE TEST	Test Setup #1		OVERVOLTAGE TEST Adjust 28-Volt power supply to 30.3 ± .1 V dc. All measurements are taken between J2V5 (H) and J2U5 (L). All tests are done with Standard modulation of 1000 Hz, 30% A.M.. Connect per Figure # 1 AUDIO ANALYZER: Connect the audio analyzer input to the R.T.I.U. front panel (J2V5/J2U5). Set the audio analyzer to measure SINAD. SIGNAL GENERATOR: Connect the signal generator to the VHF COM antenna connector. The signal amplitude is measure at the antenna connector; change the signal strength accordingly for all cable losses.	
				SENSITIVITY			SENSITIVITY Apply an 8.2 K-ohm load from J2V5 to J2U5 (INTERNAL TO RTIU).	
				Select radio channel 118.025.	<F> <118.025>		Frequency 118.025	

REV	TEST	SPECIFICATION			PROCEDURE			SPECIFICATION
LTR	NO.	OPR LIMITS	C	TEST DESCRIPTION	SWITCH POS	C	WORK STEPS	MFG LIMITS
				Inject a 118.025 MHz 3.0 uV signal into the VHF COM antenna connector.			SIGNAL GENERATOR: Set frequency for 118.025 MHz; modulate at 1 kHz 30% AM. R.F. output for 3.0 uV.	
	34.010	Greater than or equal to 6 dB		Verify the SINAD at NAV/COM-AUDIO + (P5-62) is as specified.			The audio analyzer SINAD shall read as specified.	greater than or equal to 7 dB
A				Select radio channel 151.975.	<F> <151.975>		Frequency 151.975	
A				Inject a 151.980 MHz 3.0 uV signal into the antenna port.			SIGNAL GENERATOR: Set frequency for 151.975 MHz; modulate at 1 kHz 30% AM. R.F. output for 3.0 uV.	
	34.020	Greater than or equal to 6 dB		Verify the SINAD at NAV/COM-AUDIO + (P5-62) is as specified.			The audio analyzer SINAD shall read as specified.	greater than or equal to 7 dB
							SIGNAL GENERATOR: AM modulation OFF, RF: OFF.	
					<F> <127.100>		Frequency 127.100	
				TRANSMITTER POWER	Test Setup #2		TRANSMITTER POWER Connect per Figure # 3	

REV	TEST	SPECIFICATION			PROCEDURE			SPECIFICATION
LTR	NO.	OPR LIMITS	C	TEST DESCRIPTION	SWITCH POS	C	WORK STEPS	MFG LIMITS
							MODULATION ANALYZER: Set modulation analyzer to measure power. NOTE: All attenuation losses are to be calculated out of the power measurements for an accurate reading. The actual losses of the power attenuator and cable must be known and used when taking power readings. SEE APPENDIX (A) FOR POWER CALCULATIONS.	
				Channel the radio to 118.100.	<F> <118.100>		Frequency 118.100	
				No audio applied to COM-MIC-HI (P5-2).			AUDIO ANALYZER: Disconnect audio output from RTIU inputs.	
				Key the transmitter by grounding the VHF COM PTT line (P5-24).	<T>		Key Transmitter	

REV LTR	TEST NO.	SPECIFICATION OPR LIMITS	C	TEST DESCRIPTION	PROCEDURE SWITCH POS	C	WORK STEPS	SPECIFICATION MFG LIMITS
	34.030	16 W min 30 W max		The R.F. output power at the VHF COM antenna connector shall be as specified.			MODULATION ANALYZER: (POWER METER) Measure the output power at the VHF COM antenna connector. Calculate the output power using the meter reading and the attenuation losses. The results shall be as specified.	18 W min 28.5 W max
					<T>		Un-key Transmitter	
				Channel the radio to 151.800.	<F> <151.800>		Frequency 151.800	
				With no audio applied to COM-MIC-HI (P5-2), key the transmitter by grounding the VHF COM PTT line (P5-24).	<T>		Key Transmitter	
	34.040	16 W min 30 W max		The R.F. output power at the VHF COM antenna connector shall be as specified.			MODULATION ANALYZER: (POWER METER) Measure the output power at the VHF COM antenna connector. Calculate the output power using the meter reading and the attenuation losses. The results shall be as specified.	18 W min 28.5 W max
					<T>		Un-key Transmitter.	
					<F> <127.500>		Frequency 127.500	

REV	TEST	SPECIFICATION			PROCEDURE			SPECIFICATION
LTR	NO.	OPR LIMITS	C	TEST DESCRIPTION	SWITCH POS	C	WORK STEPS	MFG LIMITS
	35.000			UNDERVOLTAGE TEST	Test Setup #1		UNDERVOLTAGE TEST Adjust 28-Volt power supply to 18.0 ± 0.1 V dc. All measurements are taken between J2V5 (H) and J2U5 (L). All tests are done with Standard modulation of 1000 Hz, 30% A.M.. Connect per Figure # 1 AUDIO ANALYZER: Connect the audio analyzer input to the R.T.I.U. front panel (J2V5/J2U5). Set the audio analyzer to measure SINAD. SIGNAL GENERATOR: Connect the signal generator to the VHF COM antenna connector. The signal amplitude is measure at the antenna connector; change the signal strength accordingly for all cable losses.	
				SENSITIVITY			SENSITIVITY Apply an 8.2 K-ohm load from J2V5 to J2U5 (INTERNAL TO RTIU).	
				Select radio channel 118.025.	<F> <118.025>		Frequency 118.025	

REV	TEST	SPECIFICATION			PROCEDURE			SPECIFICATION
LTR	NO.	OPR LIMITS	C	TEST DESCRIPTION	SWITCH POS	C	WORK STEPS	MFG LIMITS
				Inject a 118.025 MHz 3.0 uV signal into the VHF COM antenna connector.			SIGNAL GENERATOR: Set frequency for 118.025 MHz; modulate at 1 kHz 30% AM. R.F. output for 3.0 uV.	
	35.010	Greater than or equal to 6 dB		Verify the SINAD at NAV/COM-AUDIO + (P5-62) is as specified.			The audio analyzer SINAD shall read as specified.	greater than or equal to 7 dB
				Select radio channel 151.980.	<F> <151.980>		Frequency 151.980	
A				Inject a 151.975 MHz 3.0 uV signal into the antenna port.			SIGNAL GENERATOR: Set frequency for 151.975 MHz; modulate at 1 kHz 30% AM. R.F. output for 3.0 uV.	
	35.020	Greater than or equal to 6 dB		Verify the SINAD at NAV/COM-AUDIO + (P5-62) is as specified.			The audio analyzer SINAD shall read as specified.	greater than or equal to 7 dB
							SIGNAL GENERATOR: AM modulation OFF, RF: OFF.	
					<F> <127.100>		Frequency 127.100	

REV	TEST	SPECIFICATION			PROCEDURE			SPECIFICATION
LTR	NO.	OPR LIMITS	C	TEST DESCRIPTION	SWITCH POS	C	WORK STEPS	MFG LIMITS
				TRANSMITTER POWER	Test Setup #2		TRANSMITTER POWER Connect per Figure # 3 MODULATION ANALYZER: Set modulation analyzer to measure power. NOTE: All attenuation losses are to be calculated out of the power measurements for an accurate reading. The actual losses of the power attenuator and cable must be known and used when taking power readings. SEE APPENDIX (A) FOR POWER CALCULATIONS.	
				Channel the radio to 118.100.	<F> <118.100>		Frequency 118.100	
				No audio applied to COM-MIC-HI (P5-2).			AUDIO ANALYZER: Disconnect audio output from RTIU inputs.	
				Key the transmitter by grounding the VHF COM PTT line (P5-24).	<T>		Key Transmitter	

REV	TEST	SPECIFICATION			PROCEDURE			SPECIFICATION
LTR	NO.	OPR LIMITS	C	TEST DESCRIPTION	SWITCH POS	C	WORK STEPS	MFG LIMITS
	35.030	7 W min		The R.F. output power at the VHF COM antenna connector shall be as specified.			MODULATION ANALYZER: (POWER METER) Measure the output power at the VHF COM antenna connector. Calculate the output power using the meter reading and the attenuation losses. The results shall be as specified.	7 W min
					<T>		Un-key Transmitter	
				Channel the radio to 151.800.	<F> <151.800>		Frequency 151.800	
				With no audio applied to COM-MIC-HI (P5-2), key the transmitter by grounding the VHF COM PTT line (P5-24).	<T>		Key Transmitter	

REV	TEST	SPECIFICATION			PROCEDURE			SPECIFICATION
LTR	NO.	OPR LIMITS	C	TEST DESCRIPTION	SWITCH POS	C	WORK STEPS	MFG LIMITS
	35.040	7 W min		The R.F. output power at the VHF COM antenna connecor shall be as specified.			MODULATION ANALYZER: (POWER METER) Measure the output power at the VHF COM antenna connector. Calculate the output power using the meter reading and the attenuation losses. The results shall be as specified.	7 W min
					<T>		Un-key Transmitter.	
					<F> <127.500>		Frequency 127.500	
	36.000			SET VDR COM DASH NO. Place holder for future self test	Test Set up #1		SET VDR COM DASH NO.	
	37.000			CLEAR LOG Place holder for future self test	Test Set up # 1		CLEAR LOG	
	38.000			SOFTWARE VERSION Place holder for future self test	Test Setup #1		SOFTWARE VERSION	

REV	TEST	SPECIFICATION			PROCEDURE			SPECIFICATION
LTR	NO.	OPR LIMITS	C	TEST DESCRIPTION	SWITCH POS	C	WORK STEPS	MFG LIMITS
	39.000			ARINC BUS TEST	Test Set up #1		ARINC BUS TEST	
				RADIO ARINC 429 RX BUS			*RADIO ARINC 429 RX BUS*	
				FREQ/FUNC SEL PORT 1			*FREQ/FUNC SEL PORT 1*	
				Shut OFF RCB control	<R> <C> <0>			
							Connect per Figure TBD	
A				Set ARINC test set to transmit label 30, Data = 123.45, LOW SPEED.			JcAir 429 TEST SET: TX SPEED: LOW PARITY: ODD DISPLAY: ENG LABEL: 30 TX DATA: 123.45 ACTIVE: CH1 SDI: 01	
				Send label 30, Data = 123.45, LOW SPEED to P3-36 (H) and P3-17 (L).			Connect 429 Transmitter Output to RTIU P1G6 (HI) and P1H6 (LO).	
	39.010	123.450 R		The radio frequency ACTIVE channel shall be as specified.			Verify the following change to FROM COM - ACTIVE CHANNEL. The RTIU shall indicate as specified.	123.450 R
				FREQ/FUNC SEL PORT 2			FREQ/FUNC SEL PORT 2	
							Connect 429 Transmitter Output to RTIU P2C3 (HI) and P2C6 (LO)	
A				Send label 30, Data = 121.20, LOW SPEED to P3-35 (H) and P3-16 (L).			JcAir 429 TEST SET: TX SPEED: LOW PARITY: ODD DISPLAY: ENG LABEL: 30 TX DATA: 121.20 ACTIVE: CH1 SDI: 01	

REV	TEST	SPECIFICATION			PROCEDURE			SPECIFICATION
LTR	NO.	OPR LIMITS	C	TEST DESCRIPTION	SWITCH POS	C	WORK STEPS	MFG LIMITS
	39.020	121.20 R		The radio frequency ACTIVE channel shall be as specified.			Verify the following change to FROM COM - ACTIVE CHANNEL. The RTIU shall indicate as specified.	121.20 R
				FREQ/FUNC SEL PORT 3			FREQ/FUNC SEL PORT 3	
A							<u>JcAir 429 TEST SET:</u> TX SPEED: LOW PARITY: ODD DISPLAY: ENG LABEL: 30 TX DATA: 123.450 ACTIVE: CH1 SDI: 01	
A				Send label 30, Data = 123.45, LOW SPEED to P3-56 (H) and P3-55 (L).			Connect 429 Transmitter Output to RTIU P1Y4 (HI) and P1X4 (LO)	
	39.030	123.450 R		The radio frequency ACTIVE channel shall be as specified.			Verify the following change to FROM COM - ACTIVE CHANNEL. The RTIU shall indicate as specified.	123.450 R
				CMU #1-VDR-IN A			CMU #1-VDR-IN A	
	39.040			Place holder for future te				
				CMU #2-VDR-IN B			CMU #2-VDR-IN B	
	39.050			Place holder for future test				
				<u>RADIO ARINC TX BUS</u>			<u>RADIO ARINC TX BUS</u>	
				VDR-CMU 429 OUTPUT			VDR-CMU 429 OUTPUT	
	39.060			Place holder for future test				

REV	TEST	SPECIFICATION			PROCEDURE			SPECIFICATION
LTR	NO.	OPR LIMITS	C	TEST DESCRIPTION	SWITCH POS	C	WORK STEPS	MFG LIMITS
	39.070			Place holder for future test				
				NAVCOM 429 OUTPUT			NAVCOM 429 OUTPUT	
				Measure the LOW SPEED 429 output from the radio on P3-74 (H) and P3-73(L) with radio channeled to 127.500 MHz.				
A				Turn ON RCB	<R> <C> <1>		Frequency 127.500	
				Channel the radio to 127.500 MHz	<F> <127.500>		Frequency 127.500	
							<u>JcAir 429 TEST SET:</u>	
							Connect 429 Test Set Receiver Input to P1Y2 (HI) and P1X2 (LO).	
							RX SPEED: LOW DISPLAY: ENG	
	39.080	127.500		Verify the COM is transmitting the specified frequency on the 429 BUS.			Verify the 429-est set is receiving the specified frequency.	127.500
				Measure the LOW SPEED 429 output from the radio on P3-74 (H) and P3-73(L) with radio channeled to 127.100 MHz.				
				Channel the radio to 127.100 MHz	<F> <127.100>		Frequency 127.100	
							<u>JcAir 429 TEST SET:</u>	
							Connect 429 Test Set Receiver Input to P1Y2 (HI) and P1X2 (LO).	
							RX SPEED: LOW DISPLAY: ENG	

REV	TEST	SPECIFICATION			PROCEDURE			SPECIFICATION
LTR	NO.	OPR LIMITS	C	TEST DESCRIPTION	SWITCH POS	C	WORK STEPS	MFG LIMITS
	39.090	127.100		Verify the COM is transmitting the specified frequency on the 429 BUS.			Verify the 429-est set is receiving the specified frequency.	127.100
				Channel the radio to 127.500 MHz	<F> <127.500>		Frequency 127.500	

APPENDIX A
SOFTWARE LOADING TR-86X

APPENDIX A
SOFTWARE LOADING TR-86X

4. SOFTWARE LOADING

4.17 Start the Digital Radio Flash Loader by clicking on the icon

on the computer.

4.18 Select the Images that need to be loaded or changes. There must be some version of the Boot Block resident in the product in order to program the rest of the blocks. The Boot Block is initially loaded at
the card level on the CPU/Power supply.

4.19 Use the browse button to select the appropriate software blocks to load. The Software Status Table
on drawing 7026201 specifies the software part numbers to be loaded. This example indicates the
software is stored on drive D: in directory Dig_Rad/SW

4.20 Type in 192.168.14.102 as the Name, DEOS as the Password and D:/Dig_Rad/SW/GUI/libflashldC.
so as the Applet Name.

4.21 Once every thing is selected click on the Erase and Program button. When the computer indicates the programming operation is done click the Done button.

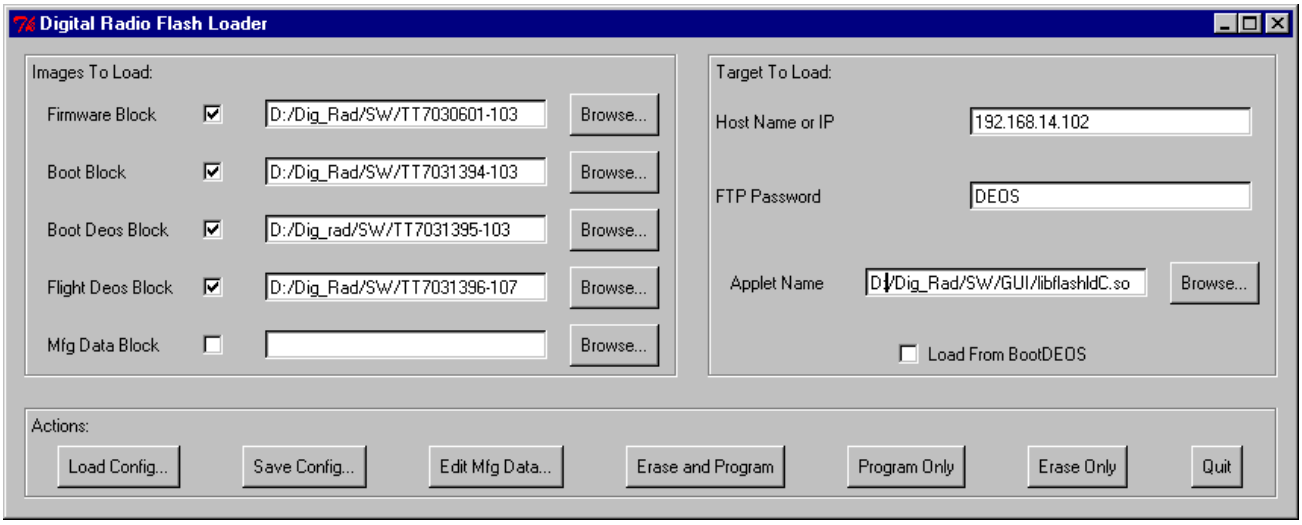

APPENDIX B
CALIBRATION TR-86X

5. CALIBRATION SETUP

VDR Adjustment Proceedure

To set the various adjustments in the FLASH EPROM, a net debug card must be attached to J3 of 7026230-902 with switches 1 and 5 down and switches 2,3 and 4 up.

Power up the VDR with the net debug card attached and connect to the LAN port on J1 of 7026232-901 via telnet.

The following parameters must be set

RDAC1DriverBiasDat
RDAC1DriverBiasVoi
RDAC2FinalBiasDat
RDAC2FinalBiasVoi
RDAC3RFPowerDat
RDAC3RFPowerVoi
RDAC4FwdPowerDat
RDAC4FwdPowerVoi
CarrSquelHyst
CarrSquelRef
MicA2DLevel
ModIndex
NIMRxAudioLevel
NIMTxAudioLevel
NSqlHyst25K
NSqlHyst8K
NSqlRef25K
NSqlRef8K
RxAudioLevel
RxTCXOLevel
SelCalAudioLevel
SquelPwrRefLevel
TxAudioLevel
TxGain
TxOffsetD2A

6. TRANSMITTER BIAS ADJUSTMENT

To set the RDAC values, read the data that the transmitter technician has recorded on a calibration label attached to the transmitter assembly.

Set these values by typing the following commands

s rdac1driverbiasvoi xxx

s rdac2finalbiasvoi xxx

s rdac3rfpowervoi xxx

s rdac4fwdpowervoi xxx

write

Substitute the values from the calibration label for the appropriate xxx

7. CARRIER SQUELCH

7.17 **Set up per Test 5.0 .**

7.18 **Monitor the SQUELCH status on the RTIU.**

7.19 Set the Signal Generator for 15.0 uV R.F. 4000 Hz 30% modulation at the COM MODULE antenna port.

NOTE: Signal levels at the generator will vary due to cable losses. Insure that the module is receiving 15.0 uV (equivalent) R.F. input.

7.20 While monitoring the squelch status on the RTIU set the value of CarrSquelRef over the LAN by typing *s CarrSquelRef xxx.*

7.21 Set the signal Generator to less than 9 uV R.F. output and verify that the squelch status indicated CLOSED. Slowly increase the Signal Generator R.F. level until the squelch status on the RTIU indicates OPEN. The Signal Generator R.F. level shall be 15.0 ± 3 uV.

NOTE: Cable losses should always be known and compensated.

7.22 Repeat steps A1.3 through A1.5 until the trip level is 15.0 ± 3 uV

7.23 Run Test 5.0.

REV LTR

8. NOISE SQUELCH

8.17 Set up per Test 6.0 and 6.01.

8.17.1 Channel the radio to 127.505.

8.18 Monitor the SQUELCH status on the RTIU.

8.19 Set the Signal Generator for 2.50 uV R.F. 1000 Hz, 50% modulation at the COM MODULE antenna
port.

NOTE: Signal levels at the generator will vary due to cable losses. Insure that the module is receiving 2.50 uV (equivalent) R.F. input.

8.20 Initially set NsqlRef8k to 2000 by typing *s NsqlRef8k 2000.* While monitoring the squelch status on the RTIU adjust the value of NsqlRef8k until the squelch status is OPEN.

8.21 Set the Signal Generator to less than 1 uV R.F. output. (The DVM should show a TTl low). Slowly increase the Signal Generator R.F. level until the DVM just goes high (TTL). The Signal Generator R.F. level shall be 2. 5 ± 0.30 uV.

NOTE: Cable losses should always be known and compensated.

8.22 Repeat steps 2.3 through 2.5 until the trip level is 2.5 ± 0.3 uV.

8.23 Run Test 6.0.

9. AUDIO OUTPUT LEVEL

9.17 Set up per I.T. Test 7.0, 7.01, and 7.02. (RF power input = 1 mV, with 80% AM at 1 kHz on a carrier of 127.5 MHz)

9.18 Connect DVM to R.T.I.U. (J2S5/J2R5).

9.19 Set DVM to measure Vrms.

9.20 While monitoring the DVM adjust RXAUDIOLEVEL over the LAN by typing s RxAudioLevel xxx.
until the DVM reads 2.9 ± 0.2 Vrms.

9.21 Run test 7.0.

10. SELCAL/ACARS OUTPUT LEVEL

10.17 Set up per I.T. Test 10.0. (RF power input = 1 mV, with 70% AM at 1 kHz on a carrier of 127.5 MHz)

10.18 Connect DVM to R.T.I.U. (J2U2/J2T2).

10.19 Set DVM to measure Vrms.

10.20 While monitoring the DVM adjust SELCALAUDIOLEVEL over the LAN by typing s SelCalAudioLevel xxx until the DVM reads 0.63 ± 0.1 Vrms.

10.21 Run test 10.0.

11. CARRIER LEVEL

11.17 Set TXOFFSETD2A by typing *s TxOffsetD2A 41948*

11.18 Set TxGain by typing *TxGain 10366*.

12. MIC LEVEL

12.17 Set up per I.T. Test 22.0 and 22.01.

12.18 Turn the transmitter on and measure the (+) peak and (-) peak with the modulation analyzer. Adjust the MIC LEVEL over the LAN by typing *s MicA2Dlevel xxx* until the average of both peaks is 50 ± 5%. Write the data into FLASH.

12.19 Turn the transmitter off.

12.20 Run I.T. Test 22.0 thru 22.04.

13. DATA LEVEL

13.17 Data to be added later.

14. VOICE MODULATION LEVEL

14.17 Set up and run I.T. Test 18.0. Find the frequency with the lowest power level. Note this frequency.

14.18 Set up per Test 23.0.

14.19 Set the active radio frequency (R.T.I.U.) to the frequency determined in 14.17.

14.20 While transmitting on the frequency set in 14.17. adjust the TXGAIN over the LAN by typing *s TxGain xxx* mode so the (+) peaks and (-) peaks on the modulation analyzer average 85 ± 5%.

14.21 Transmitter off.

14.22 Run I.T. 18.0 and 23.0 all test must pass.

15. DATA MODULATION LEVEL

15.17 Procedure to be added later.

16. SIDETONE LEVEL

16.17 Set up per I.T. Test 24.0, 24.01 and 24.02

16.18 While monitoring the DVM (R.T.I.U. AUDIO SOURCE DISPLAY [AUD LEVEL]) and the COM MODULE in transmit; Adjust the Sidetone Level over the LAN by typing *s NIMTx AudioLevel xxx* until the DV reads 0.71 ± 0.03 Vrms.

16.19 Transmit off.

16.20 Run I.T. Test 24.0.

APPENDIX C
QUALITY CONTROL FUNCTIONAL TEST REPORT

REV LTR

QUALITY CONTROL FUNCTIONAL TEST REPORT

PART NO. 7026201-( )	Serial

TEST FIXTURES AND SUPPORT EQUIPMENT

Test Fixture or Type	Serial Number	Model	SPC/ID	REV	CAL DUE DATE
RTIU					
AUDIO ANALYZER					
Oscilloscope					
ARINC Test Set					
MOD ANALYZER					
SIG GEN					
RTIU Software					
SPECTRUM ANALYZER					
DVM					
Trap Filter					

P/N 7026201	REV.	CO.	DATE:
IT NO. 7026201	REV.	CO.	DATE:
APPROVED BY			

TESTER	DATE	FTR SHEET 1 OF 8

REV LTR

QUALITY CONTROL FUNCTIONAL TEST REPORT

PART NO. 7026201-( )		SERIAL/SHOP NO.	
1.000 POWER ON CURRENT TEST		4.000 RECEIVER SELECTIVITY	
1.010	ERRORS	4.010	%
1.020	AMPS	4.020	%
		4.030	mVrms
2.000 SELF TEST			
		5.000 CARRIER SQUELCH	
		5.010	mVrms
		5.020	mVrms
		5.030	UV
		5.040	mVrms
3.000 RECEIVER TEST: SENSITIVITY		5.050	dB
3.010	dB		
3.020	dB		
3.030	dB		
3.040	dB		
3.050	dB		

TESTER	DATE	FTR SHEET 2 OF 8

REV LTR

QUALITY CONTROL FUNCTIONAL TEST REPORT

PART NO. 7026201-( )		SERIAL NO.	
6.000 Noise Squelch		8.000 AUDIO OUTPUT DISTORTION	
		8.010	%
6.010	uV	8.020	%
6.020	mVrms	8.030	%
6.030	dB		
6.040	uV	9.000 AUDIO FREQUENCY RESPONSE	
6.050	dB	9.010	Vrms
		9.020	Vrms
		9.030	Vrms
		9.040	Vrms
		9.050	dB
		9.060	dB
		10.000 SELCAL/ACARS OUTPUT LEVEL	
7.000 AUDIO OUTPUT LEVEL		10.010	Vrms
7.010	Vrms		
7.020	Vrms	11.000 SELCAL/ACARS OUTPUT DISTORTION	
7.030	Vrms	11.010	%
7.040	dB		
7.050	Vrms		
7.060	dB		

TESTER	DATE	FTR SHEET 3 OF 8

REV LTR

QUALITY CONTROL FUNCTIONAL TEST REPORT

PART NO. 7026201-( )		SERIAL NO.	
12.000 SELCAL/ACARS FREQUENCY AND PHASE RESPONSE		14.000 NOISE LEVEL	
A 12.010	Vrms	14.010	mVrms
A 12.020	Vrms	14.020	mVrms
12.030	Vrms	14.030	dB
A 12.040	Vrms	14.040	mVrms
A 12.050	Vrms	14.050	mVrms
12.060	dB	14.060	dB
A		14.070	mVrms
A 13.000 AGC RISE		14.080	mVrms
13.010	Vrms	14.090	dB
13.020	Vrms		
13.030	Vrms	15.000 IMAGE REJECTION	
13.040	dB	15.010	VDC
		15.020	dB
		16.000 SIMULCOM	

TESTER	DATE	FTR SHEET 4 OF 8

REV LTR

A

QUALITY CONTROL FUNCTIONAL TEST REPORT

PART NO. 7026201-( )		SERIAL NO.	
17.000 CARRIER LEVEL		22.000 MIC AND DATA INPUT LEVEL	
		22.010	%
		22.020	%
18.000 OUTPUT POWER			
18.010	WATTS		
18.020	WATTS		
18.030	WATTS	23.000 VOICE AND DATA MODULATION LEVEL	
18.040	WATTS	23.010	%
		23.020	%
19.000 EXTENDED TRANSMISSIONS		23.030	%
19.010	WATTS	23.040	%
19.020	WATTS		
19.030	SEC		
20.000 TRANSMIT INPUT CURRENT			
20.010	AMPS		
21.000 FREQUENCY TOLERANCE		24.000 SIDETONE LEVEL	
21.010	MHz	24.010	Vrms

TESTER	DATE	FTR SHEET 5 OF 8

REV LTR

QUALITY CONTROL FUNCTIONAL TEST REPORT

PART NO. 7026201-( )	SERIAL NO.

25.000 SIDETONE DISTORTION		**27.080**	**dB**
25.010	**%**	**27.090**	
		27.100	**dB**
26.000 VOICE AND ACARS DATA MODULATION DISTORITON			
26.010	**%**	**28.000 DATA INPUT FREQUENCY AND PHASE RESPONSE**	
26.020	**%**		
26.030	**%**		
27.000 AUDIO FREQUENCY RESPONSE WIDEBAND & NARROW BAND			
27.010	**%**		
27.020	**%**	**29.000 CARRIER NOISE LEVEL**	
27.030	**%**	**29.010**	**dB**
27.040	**dB**		
27.050			
27.060			
27.070			

TESTER	DATE	FTR SHEET 6 OF 8

REV LTR

QUALITY CONTROL FUNCTIONAL TEST REPORT

PART NO. 7026201-( )		SERIAL NO.	
30.000 RESIDUAL FREQUENCY MODULATION		33.000 MICROPHONE BIAS	
30.010	Hz	33.010	VDC
30.020	Hz		
30.030	Hz	34.000 OVERVOLTAGE TEST	
		34.010	dB
31.000 SPURIOUS R.F. EMMISONS		34.020	dB
31.010	dBc	34.030	WATTS
31.020	dBc	34.040	WATTS
31.030	dBc		
31.040	dBc	35.000 UNDERVOLTAGE TEST	
31.050	dBc	35.010	dB
31.060	dBc	35.020	dB
		35.030	WATTS
32.000 PHONE AUDIO OUTPUT		35.040	WATTS
32.010	mVrms		
32.020	mVrms	36.000 SET COM DASH NUMBER	
32.030	mVrms		
32.040	mVrms		
32.050	mVrms		
32.060	mVrms		

TESTER	DATE	FTR SHEET 7 OF 8

REV LTR

QUALITY CONTROL FUNCTIONAL TEST REPORT

PART NO. 7026201-( )	SERIAL NO.

37.000 CLEAR LOG			
		39.080	CHAN
		39.090	CHAN
38.000 SOFTWARE VERSION			
39.000 ARINC BUS TEST			
39.010	CHAN.		
39.030	CHAN.		
	CHAN.		

TESTER	DATE	FTR SHEET 8 OF 8

REV LTR
A

APPENDIX D
IT7026201 to IT7710763 CROSS REFERENCE

REV LTR A

The VDR may be tested using the latest revision of MT7510763-501. This allows the 7026201 to be tested on the automatic test equipment that has been developed for the 7510763. Table D1 lists the correspondence between the IT7026201 test numbers and the MT7510763 test numbers.

In some cases there are test which are required for the 7510763 that are not required on the 7026201. In these cases, “No test required” has been entered into table D1 for the corresponding 7026201 test number.

In some cases there are tests required on the 7026201 that do not have a corresponding test on the 7510763. In these cases “No Comparable Test” has been entered into table D1 for the corresponding 7510763 test number. These tests must be performed manually using IT7026201. A manual FTR (Appendix C) shall be filled out and submitted along with the electronic FTR from the automatic test equipment.

Table D1

IT7026201 Test Number		IT7510763 Test Number
1.000 POWER ON CURRENT TEST		1.000 POWER ON CURRENT TEST
1.01		1.01
1.02		No Comparable Test
2.000 SELF TEST		2.000 SELF TEST
No test required		2.01
No test required		2.02
No test required		2.03
No test required		2.04
No test required		2.05
3.000 RECEIVER TEST: SENSITIVITY		3.000 RECEIVER TEST: SENSITIVITY
3.01		3.01
3.02		No Comparable Test
3.03		No Comparable Test
3.04		No Comparable Test
3.05		No Comparable Test
No test required		3.06
4.000 RECEIVER SELECTIVITY		4.000 RECEIVER SELECTIVITY
4.01		4.01
4.02		4.02
4.03		4.03
5.000 CARRIER SQUELCH		5.000 CARRIER SQUELCH

REV LTR
A

IT7026201 Test Number		IT7510763 Test Number
5.01		No Comparable Test
5.02		No Comparable Test
5.03		No Comparable Test
5.04		No Comparable Test
5.05		No Comparable Test
6.000 Noise Squelch		6.000 Noise Squelch
6.01		No Comparable Test
6.02		No Comparable Test
6.03		No Comparable Test
6.04		No Comparable Test
6.05		No Comparable Test
7.000 AUDIO OUTPUT LEVEL		7.000 AUDIO OUTPUT LEVEL
7.01		7.01
7.02		7.02
7.03		7.03
7.04		7.04
7.05		7.05
7.06		7.06
8.000 AUDIO OUTPUT DISTORTION		8.000 AUDIO OUTPUT DISTORTION
8.01		8.01
8.02		8.02
8.03		8.03
9.000 AUDIO FREQUENCY RESPONSE		9.000 AUDIO FREQUENCY RESPONSE
9.01		9.01
9.02		9.02
9.03		9.03
9.04		9.04
9.05		9.05
9.06		9.06

REV LTR
A

IT7026201 Test Number		IT7510763 Test Number
10.000 SELCAL/ACARS OUTPUT LEVEL		10.000 SELCAL/ACARS OUTPUT LEVEL
10.01		10.01
11.000 SELCAL/ACARS OUTPUT DISTORTION		11.000 SELCAL/ACARS OUTPUT DISTORTION
11.01		11.01
12.000 SELCAL/ACARS FREQUENCY AND PHASE RESPONSE		12.000 SELCAL/ACARS FREQUENCY AND PHASE RESPONSE
12.01		12.01
12.02		12.02
12.03		12.03
12.04		12.04
12.05		12.05
12.06		12.06
13.000 AGC RISE		13.000 AGC RISE
13.01		13.01
13.02		13.02
13.03		13.03
13.04		13.04
14.000 NOISE LEVEL		14.000 NOISE LEVEL
14.01		No Comparable Test
14.02		No Comparable Test
14.03		No Comparable Test
14.04		No Comparable Test
14.05		No Comparable Test
14.06		No Comparable Test
14.07		No Comparable Test
14.08		No Comparable Test
14.09		No Comparable Test

REV LTR
A

IT7026201 Test Number		IT7510763 Test Number
15.000 IMAGE REJECTION		15.000 IMAGE REJECTION
15.01 No Test for -801		15.01
15.02 No Test for -801		15.02
16.000 SIMULCOM		16.000 SIMULCOM
No test required		16.01
No test required		16.02
No test required		16.03
17.000 CARRIER LEVEL		17.000 CARRIER LEVEL
17.01 No Test Required		17.01
18.000 OUTPUT POWER		18.000 OUTPUT POWER
18.01		18.01
18.02		18.02
18.03		18.03
18.04		No Comparable Test
19.000 EXTENDED TRANSMISSIONS		19.000 EXTENDED TRANSMISSIONS
19.01		19.01
19.02		19.02
19.03		19.03
20.000 TRANSMIT INPUT CURRENT		20.000 TRANSMIT INPUT CURRENT
20.01		20.01
21.000 FREQUENCY TOLERANCE		21.000 FREQUENCY TOLERANCE
21.01		21.01

REV LTR
A

IT7026201 Test Number		IT7510763 Test Number
22.000 MIC AND DATA INPUT LEVEL		22.000 MIC AND DATA INPUT LEVEL
22.01		22.01
22.02 No test required for -801		22.02
No test required		22.03
No test required		22.04
No test required		22.05
23.000 VOICE AND DATA MODULATION LEVEL		23.000 VOICE AND DATA MODULATION LEVEL
23.01		23.01
23.02		23.02
23.03		23.03
23.04		23.04
No test required		23.05
24.000 SIDETONE LEVEL		24.000 SIDETONE LEVEL
24.01		24.01
25.000 SIDETONE DISTORTION		25.000 SIDETONE DISTORTION
25.01		25.01
26.000 VOICE AND ACARS DATA MODULATION DISTORITON		26.000 VOICE AND ACARS DATA MODULATION DISTORITON
26.01		26.01
26.02		26.02
26.03		26.03
No test required		26.04
No test required		26.05
No test required		26.06
No test required		26.07
No test required		26.08
No test required		26.09
No test required		26.1

REV LTR
A

IT7026201 Test Number		IT7510763 Test Number
27.000 AUDIO FREQUENCY RESPONSE WIDEBAND & NARROW BAND		27.000 AUDIO FREQUENCY RESPONSE WIDEBAND & NARROW BAND
27.01		27.01
27.02		27.02
27.03		27.03
27.04		27.04
27.05		27.05
27.06		27.06
27.07		27.07
27.08		27.08
27.09		No Comparable Test
27.1		No Comparable Test
28.000 DATA INPUT FREQUENCY AND PHASE RESPONSE		28.000 DATA INPUT FREQUENCY AND PHASE RESPONSE
No test required		28.01
No test required		28.02
No test required		28.03
No test required		28.04
No test required		28.05
No test required		28.06
No test required		28.07
No test required		28.08
No test required		28.09
No test required		28.1
29.000 CARRIER NOISE LEVEL		29.000 CARRIER NOISE LEVEL
29.01		29.01
30.000 RESIDUAL FREQUENCY MODULATION		30.000 RESIDUAL FREQUENCY MODULATION
30.01		30.01
30.02		30.02
30.03		30.03

REV LTR
A

IT7026201 Test Number		IT7510763 Test Number
31.000 SPURIOUS R.F. EMMISONS		31.000 SPURIOUS R.F. EMMISONS
31.01		No Comparable Test
31.02		No Comparable Test
31.03		No Comparable Test
31.04		No Comparable Test
31.05		No Comparable Test
31.06		No Comparable Test
32.000 PHONE AUDIO OUTPUT		32.000 PHONE AUDIO OUTPUT
32.01		32.01
32.02		32.02
32.03		32.03
32.04		32.04
32.05		32.05
32.06		32.06
33.000 MICROPHONE BIAS		33.000 MICROPHONE BIAS
33.01		33.01
34.000 OVERVOLTAGE TEST		34.000 OVERVOLTAGE TEST
34.01		34.01
34.02		No Comparable Test
34.03		34.03
34.04		34.04
35.000 UNDERVOLTAGE TEST		35.000 UNDERVOLTAGE TEST
35.01		35.01
35.02		No Comparable Test
35.03		35.03
35.04		35.04
36.000 SET COM DASH NUMBER		36.000 SET COM DASH NUMBER
No test required		36.01

REV LTR
A

IT7026201 Test Number		IT7510763 Test Number
37.000 CLEAR LOG		37.000 CLEAR LOG
No test required		37.01
No test required		37.02
38.000 SOFTWARE VERSION		38.000 SOFTWARE VERSION
No test required		38.01
No test required		38.02
No test required		38.03
No test required		38.04
39.000 ARINC BUS TEST		39.000 ARINC BUS TEST
39.01		39.01
39.03		39.03
No test required		39.04
		39.05
39.08		No Comparable Test
39.09		No Comparable Test