ENGINEERING SPECIFICATION	SECURITY NOTATION	SPEC NO. IT7517400	AG
		CAGE CODE 55939	REV LTR
	THIS TITLE PAGE CONTAINS PROPRIETARY AND DATA RIGHTS NOTATIONS.		

DOCUMENT TYPE	CLASS	INITIAL RELEASE DATE
INTEGRATED TEST SPECIFICATION	A	3 SEP 92

DIVISION	DEPARTMENT NO.	PRODUCT LINE NO.	CONTRACT NO.
BCAS	5810	3834	

TITLE

INTEGRATED TEST SPECIFICATION FOR THE XS-852, XS-852A, XS-852B, XS-852C, XS-852D, XS-855A, XS-855B, XS-855C, XS-856A, XS-856B, XS-856C, XS-857 DIVERSITY TRANSPONDERS P/N 7517400-9XX, 8XX, EXCEPT-905

PREPARED BY:	DATE	APPROVED BY TECHNICAL MANAGER	DATE	APPROVED BY ENGINEERING DEPARTMENT MANAGER	DATE
J. Troxel	9-3-92			B. Fuller	9-3-92
APPROVED FOR SCM	DATE	APPROVED FOR SQA	DATE	APPROVED BY:	DATE

REF AWAEB/PSAEB NO.	CHECKER	PRODUCT DESIGN CHECKER (FOR REF, SPCL CONT PER EPM 1-A-40)	COGNIZANCE OF QE SUPVR (FOR REF, SPCL CONT PER EPM 1-A-40)

FOR PAGE INDEX, SEE PAGE CR-2. REVISION RECORD FOLLOWS PAGE INDEX.

THIS IS AN ELECTRONIC FACSIMILE OF THE CR-1 ON FILE WITH DOCUMENT CONTROL.

PROPRIETARY NOTICE

THIS DOCUMENT AND THE INFORMATION DISCLOSED HEREIN ARE PROPRIETARY DATA OF HONEYWELL INC. NEITHER THIS DOCUMENT NOR THE INFORMATION CONTAINED HEREIN SHALL BE REPRODUCED, USED, OR DISCLOSED TO OTHERS WITHOUT THE WRITTEN AUTHORIZATION OF HONEYWELL INC.

NOTICE

FREEDOM OF INFORMATION ACT (5 USC 552) AND DISCLOSURE OF CONFIDENCE INFORMATION GENERALLY (18 USC 1905)

THIS DOCUMENT IS BEING FURNISHED IN CONFIDENCE BY HONEYWELL INC. THE INFORMATION DISCLOSED HEREIN FALLS WITHIN EXEMPTION (b) (4) OF 5 USC 552 AND THE PROHIBITIONS OF 18 USC 1905.

Copyright 1999 Honeywell Inc.
All Rights Reserved

Honeywell	AW/CRITICAL NOTATION		
	SECURITY NOTATION	TITLE PAGE	CR-1 PAGE

ENGINEERING SPECIFICATION	SECURITY NOTATION	SPEC NO. IT7517400	AG
		CAGE CODE 55939	REV LTR

SEE THE TITLE PAGE FOR PROPRIETARY AND DATA RIGHTS NOTATIONS.

THE LATEST REVISION OF EACH SHEET IS INDICATED ON THE PAGE INDEX.

Page	Rev Ltr	Page	Rev Ltr	Page	Rev Ltr	Page	Rev Ltr	Page	Rev Ltr
Title		33	P	78	P	Appendix A		E-4	P
CR-1	AG	34	AF	79	AF	A-0	P	E-5	P
Page Index		35	AF	80	P	A-1	P	E-6	P
CR-2	AG	36	P	81	P	A-2	P	E-7	P
Revision Record		37	P	82	P	A-3	P	E-8	P
CR-3	AG	38	P	83	P			E-9	P
Table of Contents		39	T	84	P	Appendix B		E-10	P
i	AB	40	T	85	T	B-0	P	E-11	P
ii	P	41	AF	86	AF	B-1	AF	E-12	P
1	AF	42	R	87	T	B-2	AF	E-13	P
2	AE	43	P	88	T	B-3	AF	E-14	P
3	AF	44	R	89	P	B-4	AF	E-15	P
4	P	45	P	90	P	B-5	V	E-16	P
5	AF	46	P	91	P	B-6	V	E-17	P
6	AF	47	AF	92	P			E-18	P
7	AB	48	R	93	P	Appendix C		E-19	P
8	P	49	P	94	P	C-0	P	E-20	P
9	AF	50	P	95	T	C-1	AD	E-21	P
10	AF	51	P	96	P	C-2	P	E-22	P
11	AF	52	P	97	AE	C-3	P	E-23	P
12	U	53	P	98	AE	C-4	P	E-24	P
13	AF	54	P	99	P	C-5	P	E-25	P
14	P	55	AA	100	AB	C-6	P	E-26	P
15	AF	56	AA	101	P	C-7	P	E-27	P
16	AF	57	R	102	AE	C-8	P	E-28	P
17	AB	58	P	103	AE	C-9	P	E-29	P
18	P	59	AF	104	AE	C-10	P		
19	P	60	AF	105	T	C-11	P		
20	P	61	AF	106	T	C-12	P		
21	P	62	P	107	AE				
22	Y	63	P	108	T	Appendix D			
23	AF	64	R	109	P	D-0	P		
24	Y	65	AF	110	AE	D-1	P		
25	Y	66	AF	111	AE	D-2	P		
26	AF	67	AE	112	AE	D-3	P		
27	P	68	P	113	P	D-4	P		
28	P	69	AB	114	AE	D-5	P		
29	P	70	P	115	AE	D-6	P		
30	R	71	P	116	AE	D-7	P		
31	P	72	P	117	P				
32	AF	73	AB	118	AE	Appendix E			
		74	V	119	AE	E-0	P		
		75	AG	120	P	E-1	P		
		76	AF	121	AF	E-2	P		
		77	P			E-3	P		

TOTAL PAGES: 188

ENGINEERING SPECIFICATION	SECURITY NOTATION	SPEC NO. IT7517400	AG
		CAGE CODE 55939	REV LTR

SEE THE TITLE PAGE FOR PROPRIETARY AND DATA RIGHTS NOTATIONS.

REV LTR	PAGE	DESCRIPTION	DATE AND APPROVAL
		SEE REV N FOR PREVIOUS REVISION INFORMATION. DOC. CONVERTED TO LATEST FORMAT	
P	SEE PAGE INDEX SHEET CR-2	C.O. 101099 (MAKE)	Tom Sisco 25 Aug 99
R	SEE PAGE INDEX SHEET CR-2	C.O. 106557 (MAKE)	Tom Sisco 4 Nov 99
T	SEE PAGE INDEX SHEET CR-2	C.O. 26301 (NA)	Tom Sisco 2 Mar 00
U	SEE PAGE INDEX SHEET CR-2	C.O. 28463 (BREAK IN*)	M. Inouye 9 May 00
V	SEE PAGE INDEX SHEET CR-2	C.O. 101141 (BREAK IN*)	T. Sisco 9 Jan 01
W	SEE PAGE INDEX SHEET CR-2	C.O. 26780 (NA)	J. Ellis 9 Jan 01
Y	SEE PAGE INDEX SHEET CR-2	C.O. 24592 (NA)	T. Sisco 23 Apr 01
AA	SEE PAGE INDEX SHEET CR-2	C.O. 26205 (NA)	M. Ports 30 Jul 01
AB	SEE PAGE INDEX SHEET CR-2	C.O. 25560 (NA)	M. Ports 30 Jul 01
AC	SEE PAGE INDEX SHEET CR-2	C.O. 200200014A (NA)	T. Sisco 25 Mar 02
AD	SEE PAGE INDEX SHEET CR-2	C.O. 200200408A (NA)	M. Ports 2 April 02
AE	SEE PAGE INDEX SHEET CR-2	C.O. 200200987A (NA)	M. Ports 7 Jun 02
AF	SEE PAGE INDEX SHEET CR-2	C.O. 200203305A (MAKE)	M. Ports 13 Sep 02 S. Genack
AG	SEE PAGE INDEX SHEET CR-2	C.O. 200203473A (NA)	M. Ports 25 Oct 02 K. Stauffer

REV LTR

Table of Contents

Title **Page**

1. SCOPE 1
2. REFERENCE DOCUMENTS 1
3. GENERAL INFORMATION 2
4. POWER AND SIGNAL REQUIREMENTS 4
   - 4.1 POWER REQUIRED 4
   - 4.2 SIGNALS 4
5. TEST EQUIPMENT 5
   - 5.1 HONEYWELL TEST EQUIPMENT 5
   - 5.2 OPTIONAL HONEYWELL TEST EQUIPMENT 5
   - 5.3 COMMERCIAL TEST EQUIPMENT 5
6. TEST EQUIPMENT SETUP BLOCK DIAGRAM 7
   - AB 6.1 TEST EQUIPMENT SETUP FOR –901, -906 MODULE (XS-852) 7
   - 6.2 TEST EQUIPMENT SETUP FOR -902, -903, -904 MODULE (XS-852A/852B/852C) 8
   - AA 6.3 TEST EQUIPMENT SETUP FOR MODULE (XS-855, -856, -857) 9
7. TEST EQUIPMENT SETUP 10
   - 7.1 TEST SETUP#1 FOR IFR ATC1400/S1403 EQUIPMENT 10
   - 7.2 ARINC 429 TEST EQUIPMENT 11
   - 7.3 TEST SETUP # 1 11
   - 7.4 TEST SETUP #2 11
   - 7.5 PRE-TEST RTIU CURRENT CALIBRATION 12
   - U 7.6 TEST SETUP #3 12
8. GENERAL TEST REQUIREMENTS. 13
   - 8.1 SOFTWARE PART NUMBER MATRIX 13

APPENDIX A SIGNAL SPECIFICATIONS A-0
APPENDIX B QUALITY CONTROL FUNCTIONAL TEST REPORT B-0
APPENDIX C MODULE CALIBRATION PROCEDURE C-0
APPENDIX D SOFTWARE PROGRAMMING PROCEDURE D-0
APPENDIX E ERROR CODE DEFINITION E-0

TABLE OF CONTENTS (cont)

Title **Page**

List of Tests

1.0 POWER ON CURRENT TEST 15
2.0 RS-232 PROGRAMMING INTERFACE 17
3.0 DELETED 19
4.0 DELETED 19
5.0 SELF TEST 20
6.0 POWER SUPPLY LOW/HIGH LINE VOLTAGE TEST 21
7.0 MONITOR TEST 22
8.0 TRANSMITTER FREQUENCY AND OUTPUT POWER 26
9.0 TRANSMITTER REPLY PULSE WIDTH, RISE AND FALL TIME 29
10.0 DELETED 32
11.0 MODE S CODE VERIFICATION, REPLY DELAY AND JITTER 32
12.0 RECEIVER MTL, DYNAMIC RANGE AND LOW LEVEL REPLY RATIO 35
13.0 RECEIVER BANDWIDT 39
14.0 MODE S AND ATCRBS SIDE LOBE SUPRESSION (SLS) 42
15.0 P4 PULSE LEVEL, ATCRBS/MODE S AND ATCRBS ONLY ALL CALL 46
16.0 P4 PULSE POSITION 51
17.0 P4 PULSE WIDT 54
18.0 P1/P3 PULSE WIDT 57
19.0 MODE S SYNC PHASE REVRSAL (SPR) POSITION 59
20.0 DIVERSITY OPERATION 61
21.0 MUTUAL SUPPRESSION 67
22.0 DISCRETE INPUTS (-901 MODULE ONLY) 69
23.0 DISCRETE OUTPUTS (-901 MODULE ONLY) 73
24.0 FAN/STRAP MODULE INTERFACES (-901 MODULE, MOD A OR LATER ONLY) 76
25.0 ARINC 429 BUSSES (-901 MODULE ONLY, MOD - ONLY) 79
26.0 ARINC 429 BUSSES (-901 MODULE, MOD A OR LATER ONLY) 86
27.0 SET TRANSPONDER TYPE (-902, -903, -904 MODULE ONLY) 97
28.0 CLEAR MAINTENANCE LOG AND RAD SOFTWARE PART NO. 99
29.0 TRANSPONDER ON/OFF DISCRETE AND COLD/WARM START OPERATION 100
30.0 ATCRBS REPLY RATE LIMIT, CODE VERIFICATION, REPLY DELAY AND JITTER 102
31.0 DISCRETE INPUTS/OUTPUTS (-902, -903, -904 MODULE ONLY) 106
32.0 ARINC 429 BUSSES (-902, -903, -904 MODULE ONLY) 110
33.0 ATCRBS/MODE S TRANSPONDER OPERATION 118
34.0 CLEAR MAINTENANCE LOG AND FINAL TEST 121

REV LTR

AF **TITLE: INTEGRATED TEST SPECIFICATION FOR THE XS-852, XS-852A, XS-852B, XS-852C, XS-852D, XS-855A, XS-855B, XS-855C, XS-856A, XS-856B, XS-856C, XS-857 DIVERSITY TRANSPONDERS P/N 7517400-9XX, 8XX, EXCEPT-905**

1. SCOPE

AF This Integrated Test Specification establishes the manufacturing and operational requirements that the Transponder (7517400) must meet to ensure that the equipment is in proper operation condition.

This test specification covers the following Transponder part numbers:

	Honeywell P/N	Model Number/Description
	7517400-901	XS-852 Diversity Transponder with Discrete I/O Interfaces
	7517400-902	XS-852A Diversity Transponder without Discrete I/O Interfaces
	7517400-903	XS-852B Non-Diversity Mode S Transponder
	7517400-904	XS-852C ATCRBS Transponder
AB	7517400-906	XS-852D ATCRBS Transponder with Gilham code.
AE	7517400-855	XS-855A EPIC Diversity Transponder without Discrete I/O interfaces
AE	7517400-856	XS-856B EPIC Non-Diversity Mode S Transponder
AE	7517400-857	XS-855C EPIC ATCRBS Transponder
AE	7517400-865	XS-856A EPIC Diversity Transponder without Discrete I/O Interface
AE	7517400-866	XS-856B EPIC Non-Diversity Modes Transponder
AE	7517400-867	XS-856C EPIC ATCRBS Transponder
AF	7517400-875	XS-857 EPIC Diversity Transponder with Discrete I/O Interface

2. REFERENCE DOCUMENTS

Reference documents are not required for performance of the test procedures. The purpose of these documents is to provide an aid for fault isolation should any discrepancies occur during the tests.

	Honeywell P/N	Description
	7517400	Mode S Diversity Transponder Module Assembly
	7517410-90X	CCA, Interface
	7517420-90X	CCA, Processor
	7517430-90X	CCA, Connector
	7517440-90X	ECA, Receiver
	7517450-90X	CCA, IAC Processor
	7517460-90X	ECA, Transmitter
	7517470-90X	CCA, Power Supply, Modulator
	A72-5810-001-02	System Requirements Document, XS-852 Diversity Mode S Transponder
	PS7510700	Product Specification, RCZ-851( ) Integrated Communications Unit
AF	7026180-903	CCA, EPIC Transponder Interface

REV LTR

3. GENERAL INFORMATION

3.1 All tests shall be performed at a temperature of 25 ± 10° C with less than 90 percent relative humidity and at a atmospheric pressure of 20 to 32 inches of mercury.

3.2 No warm-up period is required for the module.

3.3 To limit interference and power loss, it is recommended that transponder antenna cables be made of RG-214 or equivalent, 2 to 3 feet in length and a maximum VSWR of 1.3:1.

3.4 The transponder power output is specified at the antenna port. All power readings shall be corrected for antenna cable losses and variations in power meter specifications.

3.5 Where two antenna cables are required for testing diversity antenna operations, the two antenna cables shall be matched so that the cable loss between the two cables is within 0.2dB, and the propagation delay at 1090 MHz is within 10nsec.

AF **3.6** Connect the test equipment per Figure 1 for –901 module (XS-852), Figure 2 for -902, -903, -904 module (XS-852A/852B/852C) or Figure 3 for –855, -856, -857, (XS-855A, XS-855B, XS-855C) –865, -866, -867 (XS-856A, XS-856B, XS-856C) –875 (XS-857) (EPIC)

3.7 Connect UUT TOP antenna port to ANT B RF port when using IFR S1403.

3.8 Connect UUT BOTTOM antenna port of the RF I/O port when using IFR 1400A.

3.9 Connect UUT BOTTOM antenna port to RF I/O port when using a SDX 2000.

3.10 Connect UUT TOP antenna port to bottom port when using a SDX 2000.

3.11 Connect 429 Test Set Transmitter Output and Receiver Input to the following:

<u>-923 RTIU HARNESS</u>
Connect transmitter to RTIU Pins P1G6(HI) and P1H6(LO).
Connect receiver to RTIU Pins P1Y6(HI) and P1X6(LO) (XPDR->TCAS 429 BUS)

<u>-925 RTIU HARNESS</u>
Connect transmitter to Enhanced RTIU Adapter ARINC 429 Input jack.
Connect receiver to Enhanced RTIU Adapter ARINC 429 Output jack.

<u>-926 RTIU HARNESS</u>
Connect transmitter to RTIU Pins P1G6(HI) and P1H6(LO).
Connect receiver to RTIU Pins P1Y6(HI) and P1X6(LO) (XPDR->TCAS 429 BUS)

<u>NOTE:</u> ARINC 429 Transmitter buses go to pins "P1Yn" and "P1Xn," where "n" is a row number on the RTIU front panel, an "P1" corresponds to the "J1" panel on the front panel. The RTIU pins which correspond to "P1Yn" and "P1Xn" are labeled "SPARE BUS." The "Y" column is labeled "HI" and the "X" column is labeled "LO."

REV LTR

AF **3.12** Appendix C contains a procedure for making the initial adjustments to the transponder prior to testing. This procedure is intended as guideline only and it is not a requirement that it be followed exactly. The settings given are nominal values. Tolerance build-ups on any given module may make it desirable to deviate slightly from the given levels in order to meet the required Integrated Test specifications.

AF **3.13** For manual final testing the test sequence is based on functional requirements, it is required that the tests be performed in the order given, tests maybe performed out of sequence for automated final test.

3.14 The Integrated Test Specification shall be performed in its entirety upon completion of any modifications or repairs to the unit under test.

3.15 All alphanumeric symbols bracketed by greater-than/less-than "< >" symbols will require the characters be typed and "ENTER" or "Return" typed.

3.16 In the Procedure section, switch position column, of the Integrated Test Specification document the statement "TEST SETUP # X", where X = A NUMBER, will be encountered at the beginning of each test section. This statement is included to allow the operator to break-in at any given section for troubleshooting. When encountered during the final testing of the module the operator will ignore the function and continue on with the next statement.

3.17 Instructions to setup test equipment or configure the radio will occur before the reading is taken. The test parameter reading will have a test number assigned. Taking the reading is the end of that test section and subsequent instructions belong to the next test parameter.

3.18 In cases where timing is required be sure to read the entire instruction before performing the test. The test setup and sequence is completed when the reading paragraph is performed. Any instructions after this reading are for the following test setup.

AF **3.19** If tests, other than final tests, are performed out of sequence the tester is responsible for insuring the correct mechanical and software setups are performed.

V **3.20** When filling in the manual Final Test Report (FTR) the actual readings observed will be written in the blank associated with that test. The use of less than (<), greater than (>), equal (=), or check mark signs will be avoided.

REV LTR

P

4. POWER AND SIGNAL REQUIREMENTS

4.1 Power Required

115 ± 5 V ac / 60 ± 5 Hz

+28.0 ± 0.5 V dc/ 2 A

4.2 Signals

The Radio Test Interface Unit (RTIU) in conjunction with the Personal Computer (PC), power supplies, RTIU software, and signal generators specified in the test setup generate all required signals.

REV LTR

5. TEST EQUIPMENT

AF

5.1 Honeywell Test Equipment or Equivalent

Radio Test Interface Unit (RTIU), Part No. 7511400-902

RTIU Basic Software 7512001-XYY where X = media code and YY = 10 or greater software version.

RTIU Harness Assembly

	Module Model/Part No	RTIU Harness Part No.
	XS-852 / 7517400-901	7511409-923
	XS-852A/ 7517400-902	7511409-926
	XS-852B/ 7517400-903	7511409-926
	XS-852C/ 7517400-904	7511409-926
AB	XS-852D/7517400-906	7511409-923
AE	XS-855A, -855B, 855C/7517400-855, -856, -857	7511409-935
AE	XS-856A, -856B, -856C/751400-865, -866, -867	7511409-935
AE	XS-857/751400-875	7511409-935

OPTIONAL

AB FOR –901, -906 MODUELS ONLY

	Substitute for 7511409-923
RTIU CABLE	7511409-925
WITH ADAPTER	T335784

AF

5.2 Automated Honeywell Test Equipment

AE	T-360001	Honeywell Computer Aided Test System for HPN 7517400-901, 902, 903, 904 only
AF	MT7517400-901 Rev V	Module test software
AB	T335763	Module Test adapter for –901, -906
	T336126	Module Test adapter for –902, -903, -904
	T-336384	Honeywell EPIC Computer Aided Test System for all variables of HPN 7517400 except -905
AF	MT7517400-501 Rev E	Module test software for all variables of HPN 7517400 except -905
	T336399	EPIC/PRIMUS TEST ADAPTER

REV LTR

AF **5.3** **Commercial Test Equipment or Eqivalent**

Personal Computer, IBM AT (80286 microprocessor) or equivalent with the following:

IBM Compatible

512 kilobytes of RAM, or more

Two 360k, 5-1/4 inch disk drives (20 MB hard disk recommended)

Monochrome or color monitor (with EGA, but not CGA)

Math co-processor

One serial port

7.16 MHz, or faster, clock speed

RS-232 cable

NOTE: Due to varying serial port connectors on personal computers the operator will be required to determine the proper cable for their setup.

AF DVM, FLUKE 8840A

Oscilloscope, Tektronix 2465A.

NOTE: A Tektronix 2430A digital storage oscilloscope or equivalent is recommended for testing.

Transponder Test Set, IFR ATC-1400A

Mode S Auxiliary Unit, IFR Mode S-1403

NOTE: The JcAIR SDX 2000 may be substituted for the IFR equipment.

Current meter, or DVM with current capability

AF Power supply, HP 6630 +28V dc / 5 A

AF ARINC 429 Test Set, JC AIR 429E

REV LTR

6. TEST EQUIPMENT SETUP BLOCK DIAGRAM

AB

6.1 Test Equipment Setup for –901, -906 Module (XS-852)

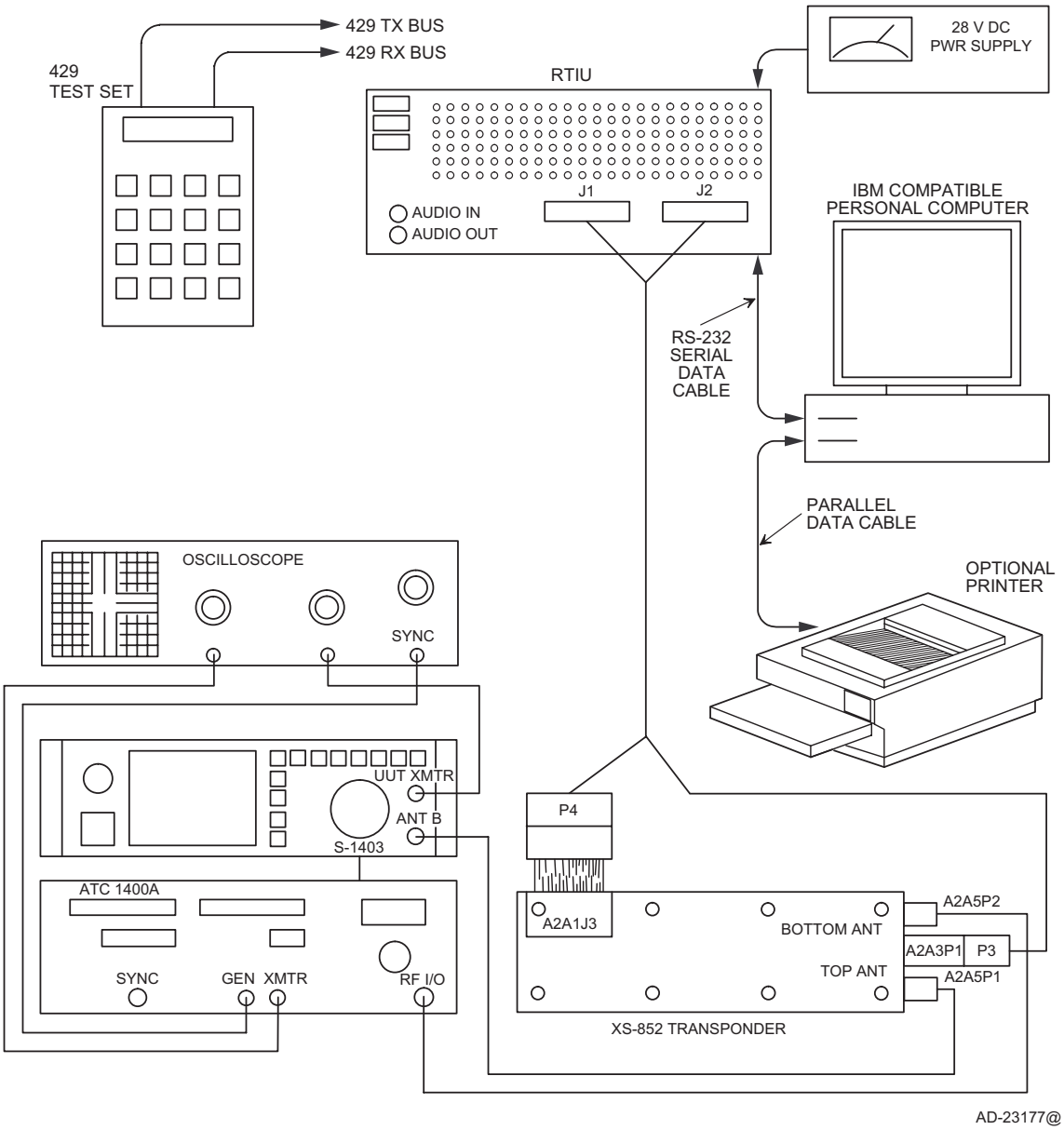

AB

Figure 1. Test Equipment (-901, -906)

REV LTR
P

6.2 Test Equipment Setup for -902, -903, -904 Module (XS-852A/852B/852C)

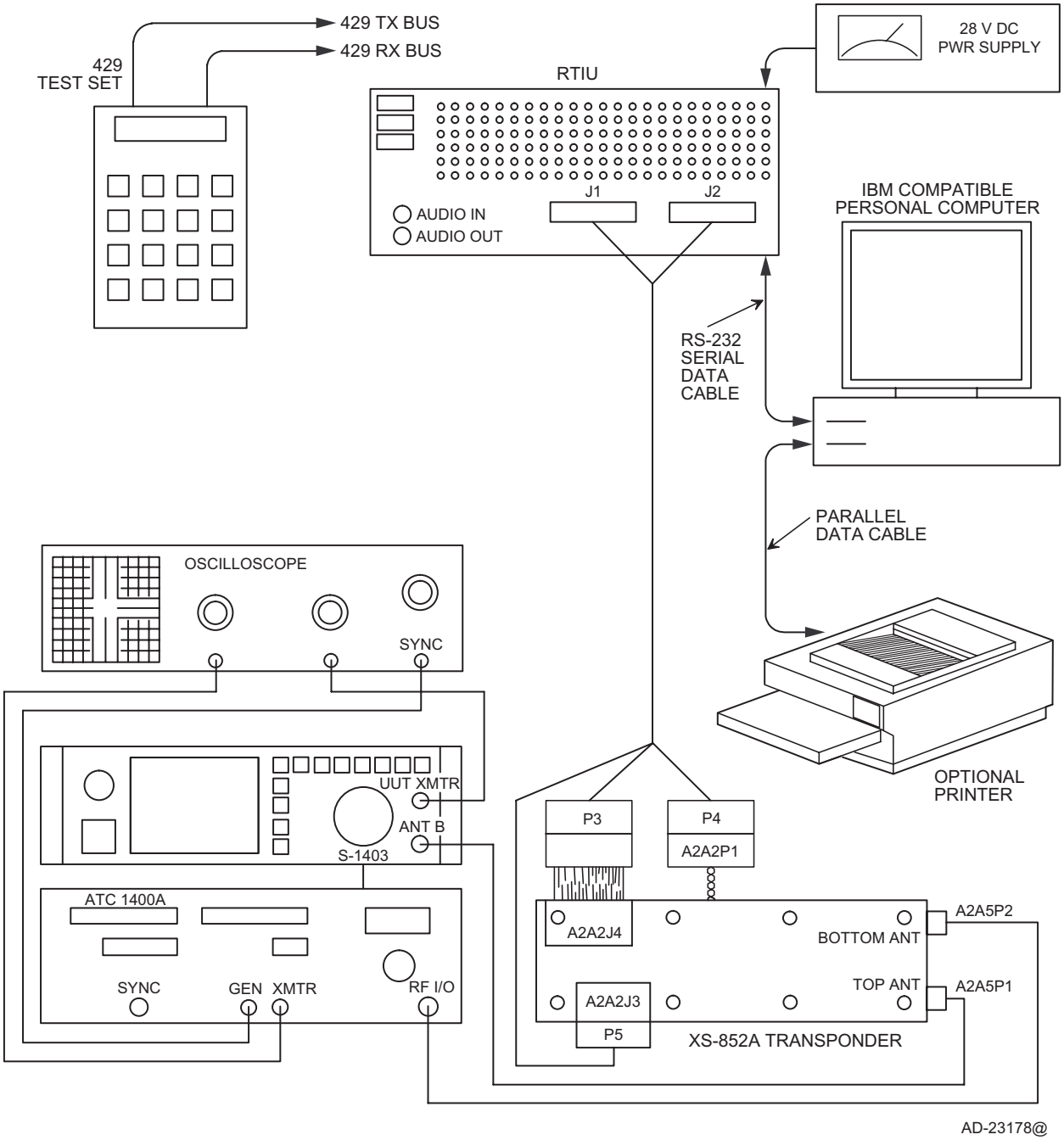

Figure 2. Test Equipment (-902, -903, -904)

REV LTR

AF

6.3 Test Equipment Setup for Module –855, -856, -857(XS-855A/855B/855C), -865, -866, -867(XS-856A/856B/856C)-875(XS-857)

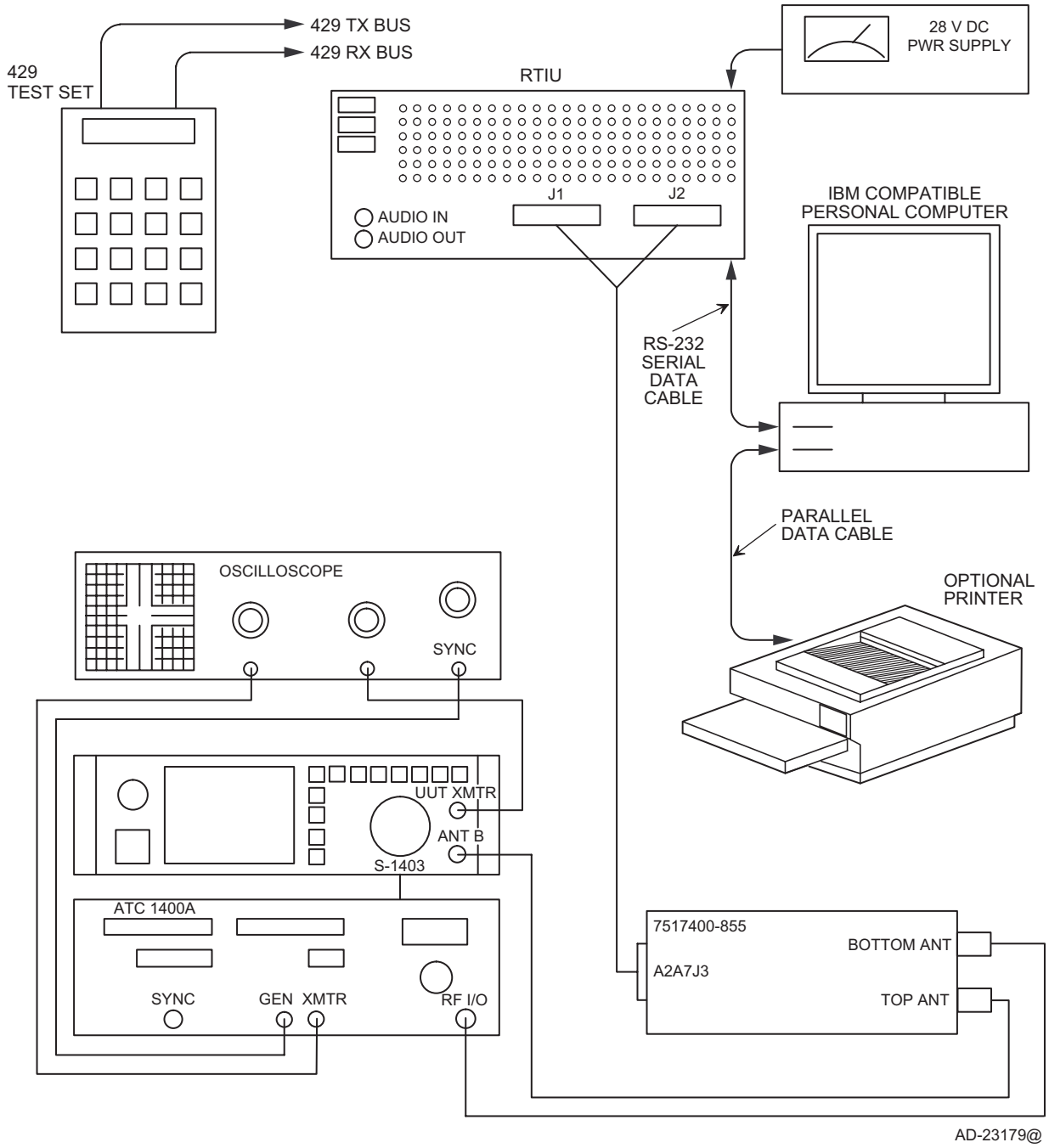

AF

Figure 3. Test Equipment (-855, -856, -857 -865,-866,-867, 875 Only)

REV LTR

P

7. TEST EQUIPMENT SETUP

7.1 Test Setup#1 for IFR ATC1400/S1403 Equipment

Test setup #1 contains the initial test equipment settings:

ATC 1400A

FREQ/FUNCT:	1030 MHz, XPDR
DELTA F:	0.00, OFF
PRF/SQTR:	60, ON
DISPLAY SELECT:	XPDR CODE
DME REPLY EFF:	100
XPDR MODE:	A
RF LEVEL:	-67, CW/NORM/OFF: NORM
TACAN:	OFF
IDENT:	OFF
F2/P2-F1/P1:	F1/P1
TO/TAC/TD:	TO
XDPR P2/P3 DEV:	0.00
P2:	CAL
P3:	CAL
DME P2 DEV:	0.0
P2:	CAL
XPDR PULSEWIDTH:	0.00, CAL
AF	MAN
AF	FREQ
AF	STEP
AF	RATE
AF	OFF
SLS/ECHO:	-0, OFF
CAL MARKS:	1.45 Us
CAL :	FULL CW
INTRF PULSE WIDTH:	FULL CCW
SUPPRESSOR:	OFF VAR: Set for +18V pulse amplitude.
RANGE/VEL/ACCEL:	00000, IN/OUT: OUT, NORM/-1NMI: -1NMI

S1403

SMENU: (1)	FMT D, UF#05, PC=0, RR=20, DI=0, SD=0, ADD=00000001
SMENU:(2) through (16)	OFF
CMENU:(1)	Func: (2) SEQ (Mode S Only)
	RFLvl: +0.00
	P6: CAL, Wd= CAL, Dv= CAL
P2: CAL	AntB: OFF

REV LTR

CMENU: (2)	Prepulse: OFF
	Ext. Sync.: Out= OFF, Dv= +0.00; In = OFF
	Pulse Power Gate:P 1
CMENU: (1)	Ext. Mod. In: OFF

P

7.2 ARINC 429 Test Equipment

JC-AIR 429

TX PARITY:	ODD
TX SPEED:	LOW
RX SPEED:	HIGH
DISPLAY:	HEX
TRANSMIT MODE	
LABEL =	203
DATA =	608340
WORD RATE =	32 Milliseconds

AF

7.3 Test Setup # 1 PC

Connect PC to RTIU using RS-232 cable.

Connect +28 Volt power supply to RTIU.

Connect RTIU Harness Assembly to RTIU.

Turn Main power switch to RTIU to ON.

Turn power to PC and PC Monitor ON.

Set PROGRAM/NORMAL switch on RTIU cable connector P1 to the NORMAL position.

After the RTIU MAIN MENU is displayed, select XS-850/852/XI-851 (<13>).

After the transponder module menu is displayed, select XS-852 (<3>).

After the DIVERSITY MODULE CONFIGURATION SOURCE DISPLAY is displayed, select:
ALTITUDE SOURCE (<A>)
RSB (<4>)
RCB PAGE (<P>).

7.4 Test Setup #2

Test Setup #2 contains additional equipment settings from Test Setup #1:

Set up equipment per the requirements in Test Setup #1.

Turn RTIU +28V ON.

Select the following commands on the RTIU:

REV LTR

<X>	Select ON+ALT ATC Mode
<5>	ON+A
<H>	MAIN BENCH PAGE
<N>	BENCH ANALOG PAGE
<Q>	SQUITTER
<D>	DISABLE
<P>	MAIN BENCH PAGE
<P>	RSB PAGE

7.5 Pre-test RTIU Current Calibration

Setup the equipment per Test Setup #1, except DON'T install the transponder at this time.

Turn on the 28 V dc power supply switch and adjust the voltage for 27.5 ± 0.25 V dc. Turn on the 28 VDC RTIU SWITCH. Observe the current meter. Record this reading for future use.

Turn off the 28 VDC RTIU SWITCH.

Connect the Transponder to the RTIU harness per Figure 1 or 2.

The unit is now reading to start testing per the I.T.

U

7.6 Test Setup #3

Test setup #3 is used to set the transponder to the nominal state.

<H>	MAIN BENCH PAGE
<K>	CALIBRATION DISPLAY
<Q>	TRANSPONDER TYPE
<0>	TYPE 0; SELECT DIVERSITY
<L>	ATCRBS RATE LIMIT
<650>	TYPE 650; SET RATE LIMIT TO 650
<B>	READ CAL DATA: ACTUAL CRC
<S>	SAVE CAL DATA
<Y>	TYPE Y: YES
<B>	READ CAL DATA: VERIFY ACTUAL CRC IS THE SAME AS PROGRAM DATA

REV LTR

8. GENERAL TEST REQUIREMENTS.

8.1 Software Part Number Matrix

Table 1 lists the software part number required for each Diversity Module for a given part number and modification status.

Table 1. Module Modification Status vs. Software Version

	MODULE PART NUMBER									SOFTWARE VERSION	
AF	-857	-856	-855	906	-904	-903	-902	-901	MOD LTR	VER(A) (FLASH PGM) (TYPE)	VER(B) (BOOT PGM)
AB				X				X	NONE	7517419-102	7517418-103
AB				X				X	A	7517419-103	7517418-103
AB							X	X	B	7517419-104-0	7517418-103
AB						X			B	7517419-104-1	7517418-103
AB				X	X				B	7517419-104-2	7517418-103
AB							X		C	7517419-105-0	7517418-103
AB						X			C	7517419-105-1	7517418-103
AB					X				C	7517419-105-2	7517418-103
AE											
AB								X	E, G	7517419-104-0	7517418-103
AB							X		E, G	7517419-105-0	7517418-103
AB						X			E, G	7517419-105-1	7517418-103
AB					X				E, G	7517419-105-2	7517418-103
AE											
AB				X					E, G	7517419-104-2	7517418-103
AB			X						G	7517419-105-0	7517418-103
AE		X							G	7517419-104-1	7517418-103
AE	X								G	7517419-105-2	7517418-103
AE	-875		-867		-866		-865		MOD LTR	VER(A) (FLASH PGM) (TYPE)	VER(B) (BOOT PGM)
AE							X		G	7517419-105-0	7517418-103
AE					X				G	7517419-105-1	7517418-103
AE			X						G	7517419-105-2	7517418-103
AE	X								G	7517419-105-0	7517418-103

REV LTR

P

Column	Description
Rev Ltr	This column is used to identify revised material.
Test No.	Tests are numbered in sequence in steps of 10. If new tests are added adding 1-9 to the end of the appropriate section will number them e.g. add new test to 1.010 results in 1.011.
Opr Limits	Unit under test (UUT) shall meet these limits whenever tested at other than the manufacturing facility. When an item is marked OPTIONAL in this column, the corresponding test is not required except as an aid in troubleshooting.
Test Description	These items are the parameters to which the unit under test was designed. In addition, these items aid in troubleshooting by specifying the input and output signal terminals. For brevity, all conditions required are not repeated for each test. Conditions established in previous tests will also apply.
Switch Pos	Perform switch settings in order specified. When an item is entered in Work Steps Column opposite a switch setting other than the first or when there is additional space between switches, perform this item before setting any other switches.
Work Steps	When work step items are entered opposite first Switch Pos, perform all switch settings first. When items are entered opposite switch setting other than first setting or when there is additional space between switches, perform work step item before setting any other switches.
Mfg Limits	Unit under test shall meet these limits prior to customer delivery.
Code	A "1" in the column indicates that the material in the next column applies only to manual test procedures. A "2" in the column indicates that the material in the next column applies only to Automatic Test Equipment procedures. A blank column indicates that the material in the next column applies equally to manual and automated test procedures.

REV	TEST	SPECIFICATION			PROCEDURE			SPECIFICATION
LTR	NO.	OPR LIMITS	C	TEST DESCRIPTION	SWITCH POS	C	WORK STEPS	MFG LIMITS
	1.000			POWER ON CURRENT TEST	Initial Test Setup		POWER ON CURRENT TEST	
AF							Prior to running Test 1.010 paragraph 7.5 must be run. Connect Equipment per Figure 1 for a -901, -906 module, Figure 2 for -902, -903, -904, Figure 3 for -8XX.	
					Test Setup #1		(For IFR 1400/S1403)	
					Test Setup #2			
				Apply +27.5 ± 0.25 V dc to unit.			Turn RTIU 28 V dc switch on.	
U					Test Setup #3		Before testing, the module unit must be set to the nominal state. (Paragraph 7.6)	
				+28V dc (+) Pins:				
AF				-901, -906: A2A3P1-8, 9				
				-902, -903, -904 A2A2P1-1 -856, -857, -865, -866, -861, -875				
				-855: A2A7J3 - 29, 30				
				Ground (-) Pins:				
AB				-901, -906: A2A3P1-7, 17, 18, 19, 21				
				-902, -903, -904 A2A2P1-2				
AE AE				-855, –856, –857, -865, -866, -861, -875: A2A7J3 - 6, 43, 44,				
							Ground station equipment: PRF/SQTR: OFF	

REV	TEST	SPECIFICATION			PROCEDURE			SPECIFICATION
LTR	NO.	OPR LIMITS	C	TEST DESCRIPTION	SWITCH POS	C	WORK STEPS	MFG LIMITS
AF	1.010	Less than or equal to 1.0 A		With the voltage applied and unit in standby the current draw shall be as specified.			With power applied to the transponder module and power supply amp meter shall read as specified. NOTE: Subtract the current found in paragraph 7.5 from the meter reading observed in 1.010. Ground station equipment: PRF/SQTR: ON	Less than or equal to 1.0 A

REV	TEST	SPECIFICATION			PROCEDURE			SPECIFICATION
LTR	NO.	OPR LIMITS	C	TEST DESCRIPTION	SWITCH POS	C	WORK STEPS	MFG LIMITS
	2.000			RS-232 PROGRAMMING INTERFACE	Test Setup #1		RS-232 PROGRAMMING INTERFACE	
				Remove +28 V dc from the module.			On the RTIU turn the 28 V dc switch off.	
					<H>		Main Bench Page	
					<F>		Program Page	
					<T>		Transmit Data	
				Connect PROGRAM_+15V to PROGRAM_ENA(PO) discrete to enable programming.			On the RTIU CABLE harness P1 connector set the PROG/NORM switch to PROG.	
AB				PROGRAM +15V pin: -901, -906: A2A3P1-25 -902, -903, -904: A2A2J3-37			WARNING: In PROGRAM mode the FLASH program may be modified inadvertently from keyboard commands. CARE SHOULD BE TAKEN TO ADHERE TO THE KEYSTROKES LISTED IN THIS SECTION.	
AB				PROGRAM_ENA(PO) pin: -901, -906: A2A3P1-12 -902, -903, -904: A2A2J3-38				
							On the RTIU turn the 28 V dc switch ON.	
				Enter and invalid command.	<A>			
	2.010	INVALID INPUT!!					The Bench Program display shall be as specified.	INVALID INPUT!!
				Exit TERMINAL mode. Return to RCB Page	<ESC>		Exit TERMINAL mode.	
					<P>		Main Bench Page	
					<P>		RCB Page	
				Disconnect PROGRAM_+15V to PROGRAM_ENA(PO) discrete to enable programming.			On the RTIU CABLE harness P1 connector set the PROG/NORM toggle switch to NORMAL.	

REV	TEST	SPECIFICATION			PROCEDURE			SPECIFICATION
LTR	NO.	OPR LIMITS	C	TEST DESCRIPTION	SWITCH POS	C	WORK STEPS	MFG LIMITS
P				Remove +28 V dc from the unit, wait 5 seconds minimum			On the RTIU turn the 28 V dc switch OFF.	
							Wait 7 seconds minimum	
				Reapply +28 V dc to the unity under test.			On the RTIU turn the 28 V dc switch ON.	

REV	TEST	SPECIFICATION			PROCEDURE			SPECIFICATION
LTR	NO.	OPR LIMITS	C	TEST DESCRIPTION	SWITCH POS	C	WORK STEPS	MFG LIMITS
P								
	3.000			DELETED.				
	4.000			DELETED				

REV	TEST	SPECIFICATION			PROCEDURE			SPECIFICATION
LTR	NO.	OPR LIMITS	C	TEST DESCRIPTION	SWITCH POS	C	WORK STEPS	MFG LIMITS
P								
	5.000			SELF TEST	Test Setup #2		SELF TEST	
	5.010	Greater than or equal to 99%		Verify transponder is replying to MODE S interrogations.			On the ground station test equipment the MODE S reply shall be as specified.	Greater than or equal to 99%
				Activate POST self-test mode.	<S>		Test (PAST/POST)	
					<O>		POST	
	5.020	ATC PASS		Verify self-test passes with no errors.			Observe the RTIU RADIO MSGS display. The display shall be as specified.	ATC PASS
				Return to NORMAL mode.			Return radio to normal.	
					<S>		TEST (PAST/POST)	

REV	TEST	SPECIFICATION			PROCEDURE			SPECIFICATION
LTR	NO.	OPR LIMITS	C	TEST DESCRIPTION	SWITCH POS	C	WORK STEPS	MFG LIMITS
P								
	6.000			POWER SUPPLY LOW/HIGH LINE VOLTAGE TEST.	Test Setup #2		POWER SUPPLY LOW/HIGH LINE VOLTAGE TEST.	
				Apply +18.0 ± 0.25 V dc to unit. (LOW Line Voltage)			With a DVM monitor the +28 V dc power supply. Adjust the supply for +18.0 ± 0.25 V dc.	
	6.010	NO ERRORS		Verify there are no RCB errors.			RTIU: Observe the ERROR display. The reading shall be as specified.	NO ERRORS
				Go to the Bench Analog Page.	<H>		Main Bench Page	
					<N>		Bench Analog Page	
	6.020	54.0 to 66.0 V dc (nominal 60.0)		Verify the +60 V dc power supply monitor is with specified limits.			RTIU: Observe the +60 V dc SUPPLY display. The reading shall be as specified.	57.0 to 63.0 V dc (nominal 60.0)
				Apply +33.0 ± 0.25 V dc to unit. (HIGH line Voltage)			With a DVM monitor the +28 V dc power supply. Adjust the supply for +33.0 ± 0.25 V dc.	
	6.030	54.0 to 66.0 V dc (nominal 60.0)		Verify the +60 V dc power supply monitor is with specified limits.			RTIU: Observe the +60 V dc SUPPLY display. The reading shall be as specified.	57.0 to 63.0 V dc (nominal 60.0)
				Return to RCB Page.	<P>		Main Bench Page	
					<P>		RCB Page	
				Apply +27.5 ± 0.25 V dc to unit.			With a DVM monitor the +28 V dc power supply. Adjust the supply for +27.5 ± 0.25 V dc.	

REV LTR	TEST NO.	SPECIFICATION OPR LIMITS	C	TEST DESCRIPTION	PROCEDURE SWITCH POS	C	WORK STEPS	SPECIFICATION MFG LIMITS
	7.000			MONITOR TEST Go to the Bench Analog Page.	Test Setup #2 <H> <N>		MONITOR TEST Main Bench Page Bench Analog Page	
	7.010	24.0 to 30.0 V dc (nominal 27.0)		Verify the filtered +28 V dc power supply monitor is with specified limits.			RTIU: Observe the 28V FILTER display. The reading shall be as specified.	25.0 to 29.0 V dc (nominal 27.0)
	7.020	54.0 to 66.0 V dc (nominal 60.0)		Verify the +60 V dc power supply monitor is with specified limits.			RTIU: Observe the +60V SUPPLY display. The reading shall be as specified.	57.0 to 63.0 V dc (nominal 60.0)
	7.030	45.0 to 55.0 V dc (nominal 50.0)		Verify the +50 V dc power supply monitor is with specified limits.			RTIU: Observe the +50V SUPPLY display. The reading shall be as specified.	47.0 to 53.0 V dc (nominal 50.0)
	7.040	24.0 to 31.0 V dc (nominal 27.5)		Verify the +28.0 V dc power supply monitor is with specified limits.			RTIU: Observe the +28.0 V SUPPLY display. The reading shall be as specified.	25.0 to 29.0 V dc (nominal 27.5)
	7.050	12.0 to 18.0 V dc (nominal 14.2)		Verify the +15.0 V dc power supply monitor is with specified limits.			RTIU: Observe the +15.0 V SUPPLY display. The reading shall be as specified.	13.5 to 16.5 V dc (nominal 14.2)
	7.060	-6.0 to -3.5 V dc (nominal -4.5)		Verify the -5 V dc power supply monitor is with specified limits.			RTIU: Observe the -5.0 V SUPPLY display. The reading shall be as specified.	-5.2 to -4.0 V dc (nominal -4.5)
Y	7.070	-18.0 to -12.0 V dc (nominal -14.8)		Verify the -15 V dc power supply monitor is with specified limits.			RTIU: Observe the -15 V SUPPLY display. The reading shall be as specified.	-16.5 to -13.5 V dc (nominal -14.8)
Y Y	7.080	-100.0 to -180.0 V dc (nominal -140.0)		Verify the -150 V dc power supply monitor is with specified limits.			RTIU: Observe the -150 V SUPPLY display. The reading shall be as specified.	-110.0 to -165.0 V dc (nominal -140.0)
	7.090	10.0 to 65.0 Deg. C. (nominal 27.0)		Verify the temperature monitor is with the specified limits.			RTIU: Observe the temperature monitor display. The reading shall be as specified.	20.0 to 55.0 Deg. C. (nominal 27.0)

REV LTR	TEST NO.	SPECIFICATION OPR LIMITS	C	TEST DESCRIPTION	PROCEDURE SWITCH POS	C	WORK STEPS	SPECIFICATION MFG LIMITS
P								
	7.100	4.0 to 6.0 V dc (nominal 5.0)		Verify the -150 V dc power supply monitor is with specified limits.			RTIU: Observe the WARM/COLD DET display. The reading shall be as specified.	4.5 to 5.5 V dc (nominal 5.0)
				Set the ATC MODE to STANDBY then go to Bench Analog Page	<P>		Main Bench Page	
					<P>		RCB Page	
					<X>		ATC MODE	
					<2>		STANDBY	
					<H>		Main Bench Page	
					<N>		Bench Analog Page	
	7.110	-30.0 to 30.0 V dc (nominal 0.0)		Verify the transmitter top pin monitor is within the limits specified.			RTIU: Observe the XMTR TOP PIN display. The reading shall be as specified.	-20.0 to 20.0 V dc (nominal 0.0)
	7.120	-30.0 to 30.0 V dc (nominal 0.0)		Verify the transmitter bottom pin monitor is within the limits specified.			RTIU: Observe the XMTR BOTTOM PIN display. The reading shall be as specified.	-20.0 to 20.0 V dc (nominal 0.0)
				Set the ATC MODE to ON+ALT then go to Bench Analog Page	<P>		Main Bench Page	
					<P>		RCB Page	
					<X>		ATC MODE	
					<5>		ON+ALT	
					<H>		Main Bench Page	
					<N>		Bench Analog Page	
AF								
AF								
	7.130	0.7 to 5.0 V dc (nominal 2.5)		Verify the Transmitter Top Forward Power monitor is within the specified limits.			RTIU: Observe the TOP FWD PWR display. The reading shall be as specified.	1.6 to 4.5 V dc (nominal 2.5)
AE								

REV LTR	TEST NO.	SPECIFICATION OPR LIMITS	C	TEST DESCRIPTION	PROCEDURE SWITCH POS	C	WORK STEPS	SPECIFICATION MFG LIMITS
	7.140	0.7 to 5.0 V dc (nominal 2.5)		Verify the Transmitter Bottom Forward Power monitor is within the specified limits.			RTIU: Observe the BOT FWD PWR display. The reading shall be as specified.	1.6 to 4.5 V dc (nominal 2.5)
	7.150	2.5 to 6.0 V dc (nominal 5.0)		Verify the Transmitter Duty Cycle monitor is within the specified limits.			RTIU: Observe the XMTR DUTY CYCLE display. The reading shall be as specified.	3.5 to 5.5 V dc (nominal 5.0)
	7.160	19.0 TO 31.0 V dc (nominal 27.0)		Verify the Transmitter Envelope monitor is within the specified limits.			RTIU: Observe the XMTR ENV MON display. The reading shall be as specified.	21.0 to 29. 0 V dc (nominal 27.0)
	7.170	0.0 to 1.0 V dc (nominal 0.0)		Verify the Self-Test monitor is within the specified limits.			RTIU: Observe the SELF-TEST MON display. The reading shall be as specified.	0.0 to 0.5 V dc (nominal 0.0)
	7.180	0.0 to 2.5 V dc (nominal 0.3)		Verify the Boost Current monitor is within the specified limits.			RTIU: Observe the BOOST CURRENT display. The reading shall be as specified.	0.0 to 2.1 V dc (nominal 0.3)
	7.190	34.0 to 46.0 V dc (nominal 40.0)		Verify the Pulse + 40v monitor is within the specified limits.			RTIU: Observe the PULSE +40V monitor display. The reading shall be as specified.	35.0 to 44.0 V dc (nominal 40.0)
	7.200	19.0 to 31.0 V dc (nominal 27.0)		Verify the Pulse Modulation monitor is within the specified limits.			RTIU: Observe the PULSE MOD display. The reading shall be as specified.	21.0 to 29.0 V dc (nominal 27.0)
Y	7.210	2.5 to 6.0 V dc (nominal 4.5)		Verify the Synthesizer Lock Detector monitor is within the specified limit.			RTIU: Observe the SYNTH LOCK DET display. The reading shall be as specified.	3.5 to 5.5 V dc (nominal 4.5)
	7.220	9.0 to 16.0 V dc (nominal 13.5)		Verify the Initial Power Supply monitor is within the specified limit.			RTIU: Observe the INIT PWR SUPPLY display. The reading shall be as specified.	10.0 to 15.0 V dc (nominal 13.5)
	7.230	0.5 to 4.5 V dc (nominal 2.0)		Verify the Local Oscillator Level monitor is within the specified limit.			RTIU: Observe the LOCAL OSC LEVEL display. The reading shall be as specified.	1.0 to 3.0 V dc (nominal 2.0)

REV	TEST	SPECIFICATION			PROCEDURE			SPECIFICATION
LTR	NO.	OPR LIMITS	C	TEST DESCRIPTION	SWITCH POS	C	WORK STEPS	MFG LIMITS
Y	7.240	1.0 to 11.0 V dc (nominal 3.0)		Verify the Local Oscillator VCO monitor is within the specified limit.			RTIU: Observe the LOCAL OSC VCO display. The reading shall be as specified.	2.0 to 9.5 V dc (nominal 3.0)
					<P>		Main Bench Page	
					<P>		RCB Page	

REV	TEST	SPECIFICATION			PROCEDURE			SPECIFICATION
LTR	NO.	OPR LIMITS	C	TEST DESCRIPTION	SWITCH POS	C	WORK STEPS	MFG LIMITS
	8.000			TRANSMITTER FREQUENCY AND OUTPUT POWR	Test Setup #2		TRANSMITTER FREQUENCY AND OUTPUT POWR	
				Transmitter Frequency			Transmitter Frequency	
AF	8.010	1089.0 to 1091.0 (nominal 1090.0 MHz)		Verify transmitter frequency on the BOTTOM Antenna is within the specified limits.			Observe the ground station test equipment XMITER/FREQ display. The display shall read as specified.	1089.5 to 1090.5 (nominal 1090.0 MHz)
				Transmitter Power Output			Transmitter Power Output	
				Measure the first pulse of the Long Mode S Reply			On the ground station equipment set to measure the F2/P2 pulse. Set equipment to measure P1. NOTE: All attenuation losses for cables must be compensated when making power measurements per paragraph 3.4.	
	8.020	Greater than or equal to 250 W		Verify transmitter power on the BOTTOM Antenna. First pulse reply shall be within specified limits.			Observe the power display on the ground station test equipment. The reading shall be as specified.	Greater than or equal to 350 W
				Measure the last pulse in the Long Mode S reply.			Set the ground station test equipment to measure pulse 115 (S115 is the last pulse in the reply.)	
	8.030	Greater than or equal to 250 W		Verify transmitter power on the BOTTOM Antenna. The last pulse on the reply shall be within the limits specified.			Observe the power meter on the ground station test equipment. The display shall read as specified.	Greater than or equal to 350 W

REV	TEST	SPECIFICATION			PROCEDURE			SPECIFICATION
LTR	NO.	OPR LIMITS	C	TEST DESCRIPTION	SWITCH POS	C	WORK STEPS	MFG LIMITS
P								
	8.040	-2.0 dB to + 2.0 dB		Verify the pulse droop (first to last pulse) of the reply is within the specified limits.			Calculate the ratio in dB between the power in 8.020 and 8.030 according to the following formula: $10 * Log_{10}$ (Power 8.020/Power 8.030) The ratio shall be as specified.	-1.5 dB to + 1.5 dB
				Measure TOP antenna power.			Connect the UUT top antenna to the ground station RF I/O PORT. On the ground station equipment set to measure the F2/P2 pulse. Set equipment to measure P1. NOTE: All attenuation losses for cables must be compensated when making power measurements per paragraph 3.4.	
	8.050	Greater than or equal to 250 W		Verify transmitter power on the TOP antenna. First pulse reply shall be within specified limits.			Observe the power display on the ground station test equipment. The reading shall be as specified.	Greater than or equal to 350 W
				Measure the last pulse in the Long Mode S reply.			Set the ground station test equipment to measure pulse 115 (S115 is the last pulse in the reply.)	
	8.060	Greater than or equal to 250 W		Verify transmitter power on the TOP Antenna. The last pulse on the reply shall be within the limits specified.			Observe the power meter on the ground station test equipment. The display shall read as specified.	Greater than or equal to 350 W

REV	TEST	SPECIFICATION			PROCEDURE			SPECIFICATION
LTR	NO.	OPR LIMITS	C	TEST DESCRIPTION	SWITCH POS	C	WORK STEPS	MFG LIMITS
P								
	8.070	-2.0 dB to + 2.0 dB		Verify the pulse droop (first to last pulse) of the reply is within the specified limits.			Calculate the ratio in dB between the power in 8.050 and 8.060 according to the following formula: 10 * Log_{10} (Power 8.050/Power 8.060) The ratio shall be as specified.	-1.5 dB to + 1.5 dB
				Re-connect BOTTOM antenna to RF I/O			On the ground station test equipment connect UUT BOTTOM antenna to RF I/O port and TOP antenna to the other antenna port. On the ground station test equipment: set to measure the first reply pulse (P1) and first power pulse.	

REV	TEST	SPECIFICATION			PROCEDURE			SPECIFICATION
LTR	NO.	OPR LIMITS	C	TEST DESCRIPTION	SWITCH POS	C	WORK STEPS	MFG LIMITS
P								
	9.000			TRANSMITTER REPLY PULSE WIDTH, RISE, AND FALL TIME	Test Setup #2		TRANSMITTER REPLY PULSE WIDTH, RISE, AND FALL TIME	
				Set ATC CODE to 0000.	<A>		ATC CODE	
					<0000>		0000	
				Select the TOP antenna			NOTE: The XMTR Detector on the ground station test equipment must be used to measure transmitter reply pulse characteristics. (Use the detector output of S1403 and antenna B readings when using IFR equipment)	
				With the transponder set to reply to 60 Long Mode S replies/second, connect the test equipment to measure the transmitter reply pulse characteristics.			Set the oscilloscope for the following configuration: CH1 TOP ANTENNA XMTR Detector. CH: 2 OFF TRIGGER A: CH1 Slope + A-SWP: 20 uSec B-SWP: 50 nSec B-Delayed Mode	
	9.010	50 nSec to 100 nSec		Check the rise time (time between the 10% and 90% voltage points on the pulse) of the second preamble pulse of the reply.			Set B-delay to measure the rising edge of the second preamble pulse of the reply. The rise time ((time between the 10% and 90% voltage points on the pulse) on the oscilloscope shall be as specified.	50 nSec to 100 nSec

REV	TEST	SPECIFICATION			PROCEDURE			SPECIFICATION
LTR	NO.	OPR LIMITS	C	TEST DESCRIPTION	SWITCH POS	C	WORK STEPS	MFG LIMITS
	9.020	450 to 550 nSec (nominal 500)		Check the pulse width (time between the 50% to 50% voltage point on the pulse) of the second preamble pulse of the reply.			Set B-SWP to 100 nSec and B-Delay to measure the pulse width of the second preamble pulse of the reply. The pulse width (time between the 50% to 50% voltage point on the pulse) on the oscilloscope shall be as specified.	450 to 550 nSec (nominal 500)
	9.030	50 nSec to 200 nSec		Check the fall time (time between the 90% and 10% voltage points on the pulse) of the second preamble pulse of the reply.			Set B-SWP to 50 nSec and S-Delay to measure the falling edge of the second preamble pulse of the reply. The fall time ((time between the 90% and 10% voltage points on the pulse) on the oscilloscope shall be as specified.	50 nSec to 200 nSec
R	9.040	50 nSec to 100 nSec		Check the rise time (time between the 10% and 90% voltage points on the pulse) of the last pulse of the reply.			Set B-delay to measure the rising edge of the last pulse of the reply. The rise time ((time between the 10% and 90% voltage points on the pulse) on the oscilloscope shall be as specified.	50 nSec to 100 nSec
	9.050	450 to 550 nSec (nominal 500)		Check the pulse width (time between the 50% to 50% voltage point on the pulse) of the last pulse of the reply.			Set B-SWP to 100 nSec and B-Delay to measure the pulse width of the last pulse of the reply. The pulse width (time between the 50% to 50% voltage point on the pulse) on the oscilloscope shall be as specified.	450 to 550 nSec (nominal 500)

REV	TEST	SPECIFICATION			PROCEDURE			SPECIFICATION
LTR	NO.	OPR LIMITS	C	TEST DESCRIPTION	SWITCH POS	C	WORK STEPS	MFG LIMITS
P								
	9.060	50 nSec to 200 nSec		Check the fall time (time between the 90% and 10% voltage points on the pulse) of the last pulse of the reply.			Set B-SWP to 50 nSec and S-Delay to measure the falling edge of the last pulse of the reply. The fall time ((time between the 90% and 10% voltage points on the pulse) on the oscilloscope shall be as specified.	50 nSec to 200 nSec
				Turn the TOP antenna off.			On the ground station test equipment turn the UUT top antenna off.	

REV	TEST	SPECIFICATION			PROCEDURE			SPECIFICATION
LTR	NO.	OPR LIMITS	C	TEST DESCRIPTION	SWITCH POS	C	WORK STEPS	MFG LIMITS
P								
	10.000			DELETED				
	11.000			MODE S CODE VERIFICATION, REPLY DELAY AND JITTER	Test Setup #2		MODE S CODE VERIFICATION, REPLY DELAY AND JITTER	
				Set ATC CODE to 2525.	<A>		ATC CODE	
					<2525>		2525	
				Display Mode S Reply Data.			Set ground station test equipment to display Mode S Reply Data.	
AF	11.010	DF=21,		Verify the Mode S Reply to a UF=5 interrogation is correct.			On the ground station test equipment the reply data shall be as specified.	DF=21
	11.020	MB=0000000 00000000000 0						MB=0000000 00000000000 0
	11.030	ID=2525						ID=2525
	11.040	ADD=000000 01						ADD=000000 01
							Set ground station test equipment to measure the reply delay of the SPR to first preamble pulse.	
	11.050	127.75 to 128.25 uSec (nominal 127.925)		Measure the SPR to First Preamble Pulse Reply Delay on the BOTTOM receiver.			The replay delay shall be as specified.	127.80 to 128.05 uSec (nominal 127.925)

REV	TEST	SPECIFICATION			PROCEDURE			SPECIFICATION
LTR	NO.	OPR LIMITS	C	TEST DESCRIPTION	SWITCH POS	C	WORK STEPS	MFG LIMITS
P				Set the test equipment to measure jitter of the First Preamble Pulse of the replay relative to the interrogation.			Setup the oscilloscope for the following configuration: CH1: UUT BOTTOM XMTR DET. CH2: OFF EXT SYNC: GEN DET. TRIGGER A: EXT, Slope + A-SWP: 20 uSec B-SWP: 50 nSec B-Delayed Mode	
	11.060	Less than or equal to 160 nSec		Measure the first preamble pulse jitter (peak to peak variation).			Set the B-Delay to measure the rising edge of the first pulse of the replay (first preamble pulse). The pulse peak reply delay variation (maximum replay delay - minimum replay delay) shall be as specified.	Less than or equal to 120 nSec
				Connect TOP antenna RF I/O PORT.			On the ground station test equipment RF I/O to the UUT TOP antenna.	
	11.070	127.75 to 128.25 uSec (nominal 127.925)		Measure the SPR to First Preamble Pulse Reply Delay on the TOP receiver.			The replay delay shall be as specified.	127.80 to 128.05 uSec (nominal 127.925)
				Re-connect BOTTOM antenna cable to RF I/O PORT and TOP antenna to second RF INPUT.			On the ground station test equipment connect the UUT BOTTOM antenna to the RF I/O port and UUT TOP antenna to the other RF INPUT.	
				Interrogate the transponder with an ATCRBS Mode A/Mode S Interrogation.			Set ground station test equipment to ATCRBS Mode/Mode S interrogations. ALL CALL LONG (ACL mode)	

REV	TEST	SPECIFICATION			PROCEDURE			SPECIFICATION
LTR	NO.	OPR LIMITS	C	TEST DESCRIPTION	SWITCH POS	C	WORK STEPS	MFG LIMITS
P								
	11.080	127.75 to 128.25 uSec (nominal 127.925)		Measure the leading edge of the P4 to First Preamble Pulse Reply Delay on the BOTTOM receiver.			The replay delay shall be as specified.	127.775 to 128.75 uSec (nominal 127.925)
AF	11.090	Less than or equal to 200 nSec		Measure the first preamble pulse jitter (peak to peak variation) on the BOTTOM antenna.			On the oscilloscope set the B-Delay to measure the rising edge of the first pulse of the reply (first preamble pulse). The pulse peak reply delay variation (maximum reply delay - minimum reply delay) shall be as specified.	Less than or equal to 160 nSec
				Connect UUT TOP antenna to test equipment RF I/O port.			On the ground station test equipment connect the UUT TOP antenna to the main RF I/O port.	
AF	11.100	127.75 to 128.25 uSec (nominal 127.925)		Measure the leading edge of the P4 to First Preamble Pulse Reply Delay on the TOP receiver.			The replay delay shall be as specified.	127.775 to 128.75 uSec (nominal 127.925)
				Re-connect UUT BOTTOM antenna to test equipment RF I/O port.			On the ground station test equipment connect the UUT BOTTOM antenna to the main RF I/O port and UUT TOP antenna to the other RF INPUT.	

REV	TEST	SPECIFICATION			PROCEDURE			SPECIFICATION
LTR	NO.	OPR LIMITS	C	TEST DESCRIPTION	SWITCH POS	C	WORK STEPS	MFG LIMITS
P								
	12.000			RECEIVER MTL, DYNAMIC RANGE AND LOW LEVEL REPLY RATIO Interrogate the transponder with 600 ATCRBS Mode A interrogations/sec.	Test Setup #2		RECEIVER MTL, DYNAMIC RANGE AND LOW LEVEL REPLY RATIO On the ground station test equipment: set reply's to ATC (ATCRBS ONLY), PRF/SQTR 600, XPDR MODE: A. On the ground station simulator adjust the RF attenuator until the %Reply shows a 90% reply average.	
AF	12.010	-78 to -74 dB (nominal -76)		Verify the UUT BOTTOM receiver MTL for ATCRBS Mode A Interrogations.			The attenuator reading shall be as specified. (NOTE: The percent reply is taken with the S1403 on IFR equipment) Add + 3 dBm to the reading found in step 12.010 and use as a starting value point. On the ground station test equipment adjust the RF attenuator to this point. Using 2.0 dBm / sec (max) increments adjust the attenuator until -24 dBm is reached on the attenuator.	-78 to -74 dB (nominal -76)
	12.020	Greater than or equal to 90%		Verify the BOTTOM receiver dynamic range for ATCRBS Mode A interrogations between MTL + 3 dBm and -24 dBm.			At each signal level the %reply of the ground station shall display as indicated. Adjust the ground station test equipment attenuator for -81 dBm	Greater than or equal to 99%

REV	TEST	SPECIFICATION			PROCEDURE			SPECIFICATION
LTR	NO.	OPR LIMITS	C	TEST DESCRIPTION	SWITCH POS	C	WORK STEPS	MFG LIMITS
P								
	12.030	Less than or equal to 10%		Verify the Bottom receiver low-level reply ratio for ATCRBS Mode A interrogations at - 81 dBm.			On the ground station test equipment read the % reply. The percentage shall be as specified. On the ground station test equipment set the PRF/SQTR: 60, MODE S Only On the ground station simulator adjust the RF attenuator until the %Reply shows a 90% reply average.	Less than or equal to 1%
	12.040	-78 to -74 dBm (nominal -76)		Verify the UUT BOTTOM receiver MTL for Mode S Interrogations.			The attenuator reading shall be as specified. (NOTE: The percent reply is taken with the S1403 on IFR equipment) Add + 3 dBm to the reading found in step 12.040 and use as a starting value point. On the ground station test equipment adjust the RF attenuator to this point. Using 2.0 dBm / sec (max) increments adjust the attenuator until -24 dBm is reached on the attenuator.	-78 to -74 dBm (nominal -76)
	12.050	Greater than or equal to 90%		Verify the BOTTOM receiver dynamic range for MODE S interrogations between MTL + 3 dBm and -24 dBm. Connect TOP antenna to RF I/O port.			At each signal level the %reply of the ground station shall display as indicated. On the ground station test equipment connect the UUT TOP antenna to the RF I/O port.	Greater than or equal to 99%

REV	TEST	SPECIFICATION			PROCEDURE			SPECIFICATION
LTR	NO.	OPR LIMITS	C	TEST DESCRIPTION	SWITCH POS	C	WORK STEPS	MFG LIMITS
P				Interrogate the transponder with 600 ATCRBS Mode A Interrogations.			On the ground station test equipment set to ATC (ATCRBS ONLY) mode, PRF/SQTR: 600 On the ground station simulator adjust the RF attenuator until the %Reply shows a 90% reply average.	
	12.060	-78 to -74 dBm (nominal -76)		Verify the UUT TOP receiver MTL for Mode A Interrogations.			The attenuator reading shall be as specified. (NOTE: The percent reply is taken with the S1403 on IFR equipment) Add + 3 dBm to the reading found in step 12.060 and use as a starting value point. On the ground station test equipment adjust the RF attenuator to this point. Using 2.0 dBm / sec (max) increments adjust the attenuator until -24 dBm is reached on the attenuator.	-78 to -74 dBm (nominal -76)
	12.070	Greater than or equal to 90%		Verify the TOP receiver dynamic range for ATCRBS Mode A interrogations between MTL + 3 dBm and -24 dBm.			At each signal level the %reply of the ground station shall display as indicated. Adjust the ground station test equipment attenuator for -81 dBm	Greater than or equal to 99%
	12.080	Less than or equal to 10%		Verify the TOP receiver low-level reply ratio for ATCRBS Mode A interrogations at - 81 dBm.			On the ground station test equipment read the % reply. The percentage shall be as specified.	Less than or equal to 1%

REV	TEST	SPECIFICATION			PROCEDURE			SPECIFICATION
LTR	NO.	OPR LIMITS	C	TEST DESCRIPTION	SWITCH POS	C	WORK STEPS	MFG LIMITS
P				Interrogate the transponder with 60 Mode S interrogations/sec.			On the ground station test equipment set PRF/SQTR: 60, Mode S Only On the ground station simulator adjust the RF attenuator until the %Reply shows a 90% reply average.	
	12.090	-78 to -74 dBm (nominal -76)		Verify the UUT TOP receiver MTL for Mode S Interrogations.			The attenuator reading shall be as specified. (NOTE: The percent reply is taken with the S1403 on IFR equipment) Add + 3 dBm to the reading found in step 12.070 and use as a starting value point. On the ground station test equipment adjust the RF attenuator to this point. Using 2.0 dBm / sec (max) increments adjust the attenuator until -24 dBm is reached on the attenuator.	-78 to -74 dBm (nominal -76)
	12.100	Greater than or equal to 90%		Verify the TOP receiver dynamic range for Mode S interrogations between MTL + 3 dBm and -24 dBm. Re-connect UUT BOTTOM antenna to RF I/O.			At each signal level the %reply of the ground station shall display as indicated. On the ground station equipment re-connect the UUT BOTTOM antenna to the RF I/O port and the TOP antenna to the other RF INPUT.	Greater than or equal to 99%

REV	TEST	SPECIFICATION			PROCEDURE			SPECIFICATION
LTR	NO.	OPR LIMITS	C	TEST DESCRIPTION	SWITCH POS	C	WORK STEPS	MFG LIMITS
	13.000			RECEIVER BANDWIDTH Interrogate the transponder with 600 ATCRBS Mode A interrogations/sec.	Test Setup #2		RECEIVER BANDWIDTH On the ground station test equipment: set for ATC (ATCRBS only) mode, PRF/SQTR 600, XPDR MODE: A, RF LEV: -17 dBm. On the ground station test equipment: set frequency for 1005.	
T	13.010	Less than or equal to 10%		Verify the BOTTOM antenna receiver bandwidth response at 1005 MHz to ATCRBS Mode A interrogations.			Observe the ground station test equipment. The % Reply shall read as specified. NOTE: This reading is taken from the S1403 when using IFR equipment. On the ground station test equipment adjust the frequency by 1 MHz steps until the % Reply is greater than or equal to 90%.	Less than or equal to 10%
	13.020	Greater than or equal to 1005 MHz		Measure where the BOTTOM receiver bandwidth response is 60 dB down at frequencies less than 1030 MHz.			The frequency shall be as specified. On the ground station test equipment set the frequency for 1055 MHz.	Greater than or equal to 1010 MHz
T	13.030	Less than or equal to 10%		Verify the BOTTOM antenna receiver bandwidth response at 1055 MHz to ATCRBS Mode A interrogations.			Observe the ground station test equipment. The % Reply shall read as specified. NOTE: This reading is taken from the S1403 when using IFR equipment.	Less than or equal to 10%

REV	TEST	SPECIFICATION			PROCEDURE			SPECIFICATION
LTR	NO.	OPR LIMITS	C	TEST DESCRIPTION	SWITCH POS	C	WORK STEPS	MFG LIMITS
							On the ground station test equipment adjust the frequency by 1 MHz steps until the % Reply is greater than or equal to 90%.	
R	13.040	Less than or equal to 1055 MHz		Measure where the BOTTOM receiver bandwidth response is 60 dB down at frequencies less than 1030 MHz.			The frequency shall be as specified.	Less than or equal to 1050 MHz
				Connect the UUT TOP antenna to the RF I/O port.			On the ground station test equipment connect the UUT TOP antenna to the RF I/O port.	
							On the ground station test equipment set the frequency for 1005 MHz.	
T	13.050	Less than or equal to 10%		Verify the TOP antenna receiver bandwidth response at 1005 MHz to ATCRBS Mode A interrogations.			Observe the ground station test equipment. The % Reply shall read as specified.	Less than or equal to 10%
							NOTE: This reading is taken from the S1403 when using IFR equipment.	
							On the ground station test equipment adjust the frequency by 1 MHz steps until the % Reply is greater than or equal to 90%.	
T	13.060	Greater than or equal to 1005 MHz		Measure where the TOP receiver bandwidth response is 60 dB down at frequencies less than 1030 MHz.			The frequency shall be as specified.	Greater than or equal to 1010 MHz
							On the ground station test equipment set the frequency for 1055 MHz.	

REV	TEST	SPECIFICATION			PROCEDURE			SPECIFICATION
LTR	NO.	OPR LIMITS	C	TEST DESCRIPTION	SWITCH POS	C	WORK STEPS	MFG LIMITS
AF	13.070	Less than or equal to 10%		Verify the TOP antenna receiver bandwidth response at 1055 MHz to ATCRBS Mode A interrogations.			Observe the ground station test equipment. The % Reply shall read as specified. NOTE: This reading is taken from the S1403 when using IFR equipment. On the ground station test equipment adjust the frequency by 1 MHz steps until the % Reply is greater than or equal to 90%.	Less than or equal to 10%
R	13.080	Less than or equal to 1055 MHz		Measure where the BOTTOM receiver bandwidth response is 60 dB down at frequencies less than 1030 MHz. Set the RF test set for standard interrogations. Re-connect the UUT BOTTOM antenna to the RF I/O port and the TOP antenna to the other RF port.			The frequency shall be as specified. On the ground station test equipment set the frequency for 1030 MHz. On the ground station test equipment re-connect the UUT BOTTOM antenna to the RF I/O port and the TOP antenna to the other RF port.	Less than or equal to 1050 MHz

REV	TEST	SPECIFICATION			PROCEDURE			SPECIFICATION
LTR	NO.	OPR LIMITS	C	TEST DESCRIPTION	SWITCH POS	C	WORK STEPS	MFG LIMITS
	14.000			MODE S AND ATCRBS SIDE LOBE SUPPRESSION (SLS) Interrogate the transponder with 600 ATCRBS Mode A interrogations/sec.	Test Setup #2		MODE S AND ATCRBS SIDE LOBE SUPPRESSION (SLS) On the ground station test equipment: set for ATC (ATCRBS only) mode, PRF/SQTR 600, XPDR MODE: A, RF LEV: -17 dBm. On the ground station test equipment set the SLS/ECHO: -0, ON On the ground station test equipment adjust the RF LEVEL in 2 dB/sec (max) steps from -74 dBm to -24 dBm.	
	14.010	Less than or equal to 10%		Verify the BOTTOM receiver SLS pulse recognition for ATCRBS Mode A interrogations with P2 = P1			At each signal level the % reply shall be as specified. NOTE: On IFR equipment this reading is taken from the S1403. On the ground station test equipment set the SLS/ECHO: -9, ON On the ground station test equipment adjust the RF LEVEL in 2 dB/sec (max) steps from -74 dBm to -24 dBm.	Less than or equal to 1%
R	14.020	Greater than or equal to 90%		Verify the BOTTOM receiver SLS pulse recognition for ATCRBS Mode A interrogations with P2 = P1 - 9dB			At each signal level the % reply shall be as specified. NOTE: On IFR equipment this reading is taken from the S1403. On the ground station test equipment set the RF LEVEL: -74 dBm, SLS/ECHO: -0, ON	Greater than or equal to 99%

REV	TEST	SPECIFICATION			PROCEDURE			SPECIFICATION
LTR	NO.	OPR LIMITS	C	TEST DESCRIPTION	SWITCH POS	C	WORK STEPS	MFG LIMITS
							On the ground station test equipment decrease the SLS/ECHO until the % reply is greater than or equal to 50%.	
	14.030	Less than or equal to 0 dB		Verify the BOTTOM receiver SLS pulse recognition threshold for an ATCRBS Mode A interrogation at MTL +3 dB			The SLS/ECHO shall be as specified.	Less than or equal to -1 dB.
							On the ground station test equipment set the RF LEVEL: -24 dBm, SLS/ECHO: -0, ON	
							On the ground station test equipment decrease the SLS/ECHO until the % reply is greater than or equal to 50%.	
	14.040	Less than or equal to 0 dB		Verify the BOTTOM receiver SLS pulse recognition threshold for an ATCRBS Mode A interrogation at -24 dBm			The SLS/ECHO shall be as specified.	Less than or equal to -1 dB.
				Connect the UUT TOP antenna to the test equipment RF I/O port.			On the ground station test equipment connect the UUT TOP antenna to the RF I/O port.	
							On the ground station test equipment set XPDR MODE: C, SLS/ECHO: -0, ON.	
							On the ground station test equipment adjust the RF LEVEL in 2 dB/sec (max) steps from -74 dBm to -24 dBm.	

REV	TEST	SPECIFICATION			PROCEDURE			SPECIFICATION
LTR	NO.	OPR LIMITS	C	TEST DESCRIPTION	SWITCH POS	C	WORK STEPS	MFG LIMITS
	14.050	Less than or equal to 10%		Verify the TOP receiver SLS pulse recognition for ATCRBS Mode C interrogations with P2 = P1			At each signal level the % reply shall be as specified. NOTE: On IFR equipment this reading is taken from the S1403. On the ground station test equipment set the SLS/ECHO: -9, ON On the ground station test equipment adjust the RF LEVEL in 2 dB/sec (max) steps from -74 dBm to -24 dBm.	Less than or equal to 1%
R	14.060	Greater than or equal to 90%		Verify the TOP receiver SLS pulse recognition for ATCRBS Mode C interrogations with P2 = P1 - 9dB			At each signal level the % reply shall be as specified. NOTE: On IFR equipment this reading is taken from the S1403. On the ground station test equipment set the RF LEVEL: -74 dBm, SLS/ECHO: -0, ON On the ground station test equipment decrease the SLS/ECHO until the % reply is greater than or equal to 50%.	Greater than or equal to 99%
	14.070	Less than or equal to 0 dB		Verify the TOP receiver SLS pulse recognition threshold for an ATCRBS Mode C interrogation at MTL +3 dB			The SLS/ECHO shall be as specified. On the ground station test equipment set the RF LEVEL: -24 dBm, SLS/ECHO: -0, ON	Less than or equal to -1 dB.

REV	TEST	SPECIFICATION			PROCEDURE			SPECIFICATION
LTR	NO.	OPR LIMITS	C	TEST DESCRIPTION	SWITCH POS	C	WORK STEPS	MFG LIMITS
P							On the ground station test equipment decrease the SLS/ECHO until the % reply is greater than or equal to 50%.	
	14.080	Less than or equal to 0 dB		Verify the TOP receiver SLS pulse recognition threshold for an ATCRBS Mode A interrogation at -24 dBm			The SLS/ECHO shall be as specified.	Less than or equal to -1 dB.
				Re-connect UUT BOTTOM antenna to RF I/O port and TOP antenna to the other RF port.			On the ground station test equipment re-connect UUT BOTTOM antenna to RF I/O port and TOP antenna to the other RF port.	
				Set the RF test set for Mode S interrogations.			On the ground station test equipment set for: Mode S only, PRF/SQTR: 60, RF LEV: -67 dBm	
							On the ground station test equipment set for: SLS/ECHO: +3, ON	
	14.090	Less than or equal to 10%		Verify no replies are generated for a Mode S interrogations with the P5 (SLS) pulse set to the P6 RF level +3 dB.			On the ground station test equipment the % reply shall be as specified.	Less than or equal to 1%
							NOTE: On IFR equipment the % reply is displayed on the S1403.	
							On the ground station test equipment decrease the SLS/ECHO by -1 dB increments until the % reply is greater than or equal to 99%.	
	14.100	Greater than or equal to -12 dB		Verify replies are generated for a Mode S interrogation with the P5 (SLS) pulse set to the P6 RF level -12 dB.			The SLS/ECHO shall be as specified.	Greater than or equal to -10 dB.

REV	TEST	SPECIFICATION			PROCEDURE			SPECIFICATION
LTR	NO.	OPR LIMITS	C	TEST DESCRIPTION	SWITCH POS	C	WORK STEPS	MFG LIMITS
P								
	15.000			P4 PULSE LEVEL, ATCRBS/MODE S AND ATCRBS ONLY ALL CALL Interrogate the transponder with 60 ATCRBS Mode A/Mode S ALL CALL interrogations/sec.	Test Setup #2		P4 PULSE LEVEL, ATCRBS/MODE S AND ATCRBS ONLY ALL CALL On the ground station test equipment set for: ACL (ATCRBS/Mode S ALL CALL) mode, P4: variable, XPDR MODE: A On the ground station test equipment set: SLS/ECHO: -1, OFF On the ground station test equipment adjust the RF LEV in 2 dB/sec (max) steps from -67 to -24 dBm.	
	15.010	Greater than or equal to 90%		Verify the BOTTOM receiver recognizes interrogations as valid ATCRBS Mode A/Mode S All Call interrogations when P4 = P3 -1 dB.			At each signal level the % replay shall be as specified. NOTE: On IRF equipment the % reply is read on the S1403. On the ground station test equipment set: SLS/ECHO: -6, OFF On the ground station test equipment adjust the RF LEV in 2 dB/sec (max) steps from -67 to -24 dBm.	Greater than or equal to 99%
	15.020	Greater than or equal to 90%		Verify the BOTTOM receiver recognizes interrogations as valid ATCRBS Mode A interrogations when P4 = P3 -6 dB.			At each signal level the % replay shall be as specified. NOTE: On IRF equipment the % reply is read on the S1403. On the ground station test equipment set; RF LEV: -74, SLS/ECHO: -1, OFF	Greater than or equal to 99%

REV	TEST	SPECIFICATION			PROCEDURE			SPECIFICATION
LTR	NO.	OPR LIMITS	C	TEST DESCRIPTION	SWITCH POS	C	WORK STEPS	MFG LIMITS
P							On the ground station test equipment decrease the SLS/ECHO until the % reply is less than or equal to 50%.	
	15.030	Less than or equal to -1 dB		Verify the BOTTOM receiver P4 pulse recognition threshold for ATCRBS Mode A/Mode S All Call interrogations at MTL +3 dB.			The SLS/ECHO shall be as specified.	Less than or equal to -1 dB
							On the ground station test equipment set the RF LEVEL: -24 dBm, SLS/ECHO: -1, OFF	
							On the ground station test equipment decrease the SLS/ECHO until the % reply is less than or equal to 50%.	
AF	15.040	Less than or equal to -1 dB		Verify the BOTTOM receiver P4 pulse recognition threshold for an ATCRBS Mode A/Mode S All Call interrogation at -24 dBm			The SLS/ECHO shall be as specified.	Less than or equal to -1 dB.
				Interrogate the transponder with 60 ATCRBS Mode C-Only All Call interrogations/sec.			On the ground station equipment set; ACS (ATCRBS-Only All Call) mode, P4: variable, XPDR MODE: C	
							On the ground station equipment set; SLS/ECHO: -1, OFF	
							On the ground station test equipment adjust the RF LEVEL in 2 dB/sec (max) steps from - 67 dBm to -24 dBm.	

REV	TEST	SPECIFICATION			PROCEDURE			SPECIFICATION
LTR	NO.	OPR LIMITS	C	TEST DESCRIPTION	SWITCH POS	C	WORK STEPS	MFG LIMITS
	15.050	Less than or equal to 10%		Verify no replies are generated to ATCRBS-Only Mode C All Call interrogations on the BOTTOM receiver when: P4 = P3 - 1 dB Connect the UUT TOP antenna to the test equipment RF I/O port.			At each signal level the % reply shall be as specified. NOTE: On IFR equipment this reading is taken from the S1403. On the ground station test equipment connect the UUT TOP antenna to the RF I/O port. On the ground station test equipment; XPDR MODE: A On the ground station test equipment adjust the RF LEVEL in 2 dB/sec (max) steps from - 67 dBm to -24 dBm.	Less than or equal to 1%
	15.060	Less than or equal to 10%		Verify no replies are generated to ATCRBS-Only Mode A All Call interrogations on the TOP receiver when P4 = P3 - 1 dB			At each signal level the % reply shall be as specified. NOTE: On IFR equipment this reading is taken from the S1403. On the ground station test equipment; ACL, XPDR MODE: C, P4: VAR On the ground station test equipment adjust the RF LEVEL in 2 dB/sec (max) steps from - 67 dBm to -24 dBm.	Less than or equal to 1%
R								
R	15.070	Greater than or equal to 90%		Verify TOP receiver recognizes as valid ATCRBS Mode C All Call interrogations when P4 = P3 - 1 dB			At each signal level the % reply shall be as specified. NOTE: On IFR equipment this reading is taken from the S1403. On the ground station test equipment set; SLS/ECHO: -6, OFF	Greater than or equal to 99%

REV	TEST	SPECIFICATION			PROCEDURE			SPECIFICATION
LTR	NO.	OPR LIMITS	C	TEST DESCRIPTION	SWITCH POS	C	WORK STEPS	MFG LIMITS
P							On the ground station test equipment adjust the RF LEVEL in 2 dB/sec (max) steps from - 67 dBm to -24 dBm.	
	15.080	Greater than or equal to 90%		Verify TOP receiver recognizes as valid ATCRBS Mode C interrogations when P4 = P3 - 6 dB			At each signal level the % reply shall be as specified. NOTE: On IFR equipment this reading is taken from the S1403. On the ground station test equipment set; SLS/ECHO: -1, OFF, RF LEV: -74 On the ground station test equipment decrease the SLS/ECHO until the % reply is less than or equal to 50%.	Greater than or equal to 99%
	15.090	Less than or equal to -1 dB		Verify the TOP receiver P4 pulse recognition threshold for ATCRBS Mode C/Mode S All Call interrogation at MTL + 3 dB.			The SLS/ECHO shall be as specified. NOTE: On IFR equipment the % reply is read on the S1403. On the ground station test equipment set; RF LEV: -24 On the ground station test equipment decrease the SLS/ECHO until the % reply is less than or equal to 50%.	Less than or equal to -1 dB
	15.100	Less than or equal to -1 dB		Verify the TOP receiver P4 pulse recognition threshold for ATCRBS Mode C/Mode S All Call interrogation at -24 dBm.			The SLS/ECHO shall be as specified. NOTE: On IFR equipment the % reply is read on the S1403.	Less than or equal to -1 dB

REV	TEST	SPECIFICATION			PROCEDURE			SPECIFICATION
LTR	NO.	OPR LIMITS	C	TEST DESCRIPTION	SWITCH POS	C	WORK STEPS	MFG LIMITS
P				Set the RF test set for standard interrogations.			On the ground station test equipment set; RF LEV: -67, SLS/ECHO: -0, OFF, P4: CAL	
				Re-connect UUT BOTTOM antenna to test equipment RF I/O port and UUT TOP antenna to the other RF port.			On the ground station test equipment re-connect UUT BOTTOM antenna to test equipment RF I/O port and UUT TOP antenna to the other RF port.	

REV	TEST	SPECIFICATION			PROCEDURE			SPECIFICATION
LTR	NO.	OPR LIMITS	C	TEST DESCRIPTION	SWITCH POS	C	WORK STEPS	MFG LIMITS
P								
	16.000			P4 PULSE POSITION	Test Setup #2		P4 PULSE POSITION On the ground station test equipment set: ACL (ATCRBS/Mode S All Call) mode, XPDR MODE: C (ATCRBS Mode C/Mode S All Call interrogations. On the ground station test equipment set: P4: Deviation -0.30	
	16.010	Greater than or equal to 90%		Verify the BOTTOM receiver does NOT recognize interrogations as ATCRBS Mode C/Mode S All Call when the P3 to P4 spacing is 1.7 uSec. The transponder will reply with ATCRBS replies.			On the ground station test equipment the ATC percent reply shall be as specified. NOTE: On IFR equipment the reading is taken from the S1403. On the ground station test equipment set; P4: Deviation -0.05	Greater than or equal to 99%
	16.020	Greater than or equal to 90%		Verify the BOTTOM receiver DOES recognize interrogations as ATCRBS Mode C/Mode S All Call when the P3 to P4 spacing is 1.95 uSec. The transponder will reply with Mode S replies.			On the ground station test equipment the Mode S percent reply shall be as specified. NOTE: On IFR equipment the reading is taken from the S1403. On the ground station test equipment set; P4: Deviation +0.05	Greater than or equal to 99%
	16.030	Greater than or equal to 90%		Verify the BOTTOM receiver DOES recognize interrogations as ATCRBS Mode C/Mode S All Call when the P3 to P4 spacing is 2.05 uSec. The transponder will reply with Mode S replies.			On the ground station test equipment the Mode S percent reply shall be as specified. NOTE: On IFR equipment the reading is taken from the S1403.	Greater than or equal to 99%

REV	TEST	SPECIFICATION			PROCEDURE			SPECIFICATION
LTR	NO.	OPR LIMITS	C	TEST DESCRIPTION	SWITCH POS	C	WORK STEPS	MFG LIMITS
P							On the ground station test equipment set; P4: Deviation +0.30	
	16.040	Greater than or equal to 90%		Verify the BOTTOM receiver DOES recognize interrogations as ATCRBS Mode C/Mode S All Call when the P3 to P4 spacing is 2.3 uSec. The transponder will reply with ATCRBS replies.			On the ground station test equipment the ATC percent reply shall be as specified. NOTE: On IFR equipment the reading is taken from the S1403.	Greater than or equal to 99%
				Test TOP Antenna for P4 Pulse Positon.			Connect UUT TOP antenna to ground station RF input port. NOTE: On IFR 1400 equipment the antenna must be connect to the RF I/O port On the ground station test equipment set; P4: Deviation -0.30, XPDR MODE: A	
	16.050	Greater than or equal to 90%		Verify the TOP receiver does NOT recognize interrogations as ATCRBS Mode C/Mode S All Call when the P3 to P4 spacing is 1.7 uSec. The transponder will reply with ATCRBS replies.			On the ground station test equipment the ATC percent reply shall be as specified. NOTE: On IFR equipment the reading is taken from the S1403. On the ground station test equipment set; P4: Deviation -0.05	Greater than or equal to 99%
	16.060	Greater than or equal to 90%		Verify the TOP receiver Recognizes interrogations as ATCRBS Mode C/Mode S All Call when the P3 to P4 spacing is 1.95 uSec. The transponder will reply with Mode S replies.			On the ground station test equipment the Mode S percent reply shall be as specified. NOTE: On IFR equipment the reading is taken from the S1403.	Greater than or equal to 99%

REV	TEST	SPECIFICATION			PROCEDURE			SPECIFICATION
LTR	NO.	OPR LIMITS	C	TEST DESCRIPTION	SWITCH POS	C	WORK STEPS	MFG LIMITS
P							On the ground station test equipment set; P4: Deviation +0.05	
	16.070	Greater than or equal to 90%		Verify the TOP receiver Recognizes interrogations as ATCRBS Mode C/Mode S All Call when the P3 to P4 spacing is 2.05 uSec. The transponder will reply with Mode S replies.			On the ground station test equipment the Mode S percent reply shall be as specified. NOTE: On IFR equipment the reading is taken from the S1403.	Greater than or equal to 99%
							On the ground station test equipment set; P4: Deviation +0.30	
	16.080	Greater than or equal to 90%		Verify the TOP receiver Recognizes interrogations as ATCRBS Mode C/Mode S All Call when the P3 to P4 spacing is 2.3 uSec. The transponder will reply with ATCRBS replies.			On the ground station test equipment the ATC percent reply shall be as specified. NOTE: On IFR equipment the reading is taken from the S1403.	Greater than or equal to 99%
				Set RF test set for standard interrogations.			On the ground station test equipment set; P4: Deviation CAL	
				Re-connect UUT BOTTOM antenna to the RF I/O port and UUT TOP antenna to the other RF port.			Re-connect UUT BOTTOM antenna to the RF I/O port and UUT TOP antenna to the other RF port.	

REV	TEST	SPECIFICATION			PROCEDURE			SPECIFICATION
LTR	NO.	OPR LIMITS	C	TEST DESCRIPTION	SWITCH POS	C	WORK STEPS	MFG LIMITS
P	17.000			P4 PULSE WIDTH	Test Setup #2		P4 PULSE WIDTH On the ground station test equipment set: ACL (ATCRB/Mode S All Call) mode. On the ground station test equipment set; P4: Width -0.40	
	17.010	Less than or equal to 10%		Verify the UUT BOTTOM receiver does NOT recognize interrogations as ATCRBS Mode A/Mode S All Call when the P4 pulse width is 1.2 uSec.			On the ground station test equipment the Mode S % reply shall display as specified. NOTE: On IFR equipment the reading is taken from the S1403. On the ground station test equipment set; P4: Width -0.10	Less than or equal to 1%
	17.020	Greater than or equal to 90%		Verify the UUT BOTTOM receiver Recognizes interrogations as ATCRBS Mode A/Mode S All Call when the P4 pulse width is 1.5 uSec.			On the ground station test equipment the Mode S % reply shall display as specified. NOTE: On IFR equipment the reading is taken from the S1403. On the ground station test equipment set; P4: Width +0.10	Greater than or equal to 99%
	17.030	Greater than or equal to 90%		Verify the UUT BOTTOM receiver Recognizes interrogations as ATCRBS Mode A/Mode S All Call when the P4 pulse width is 1.7 uSec.			On the ground station test equipment the Mode S % reply shall display as specified. NOTE: On IFR equipment the reading is taken from the S1403. On the ground station test equipment set; P4: Width +0.90	Greater than or equal to 99%

REV	TEST	SPECIFICATION			PROCEDURE			SPECIFICATION
LTR	NO.	OPR LIMITS	C	TEST DESCRIPTION	SWITCH POS	C	WORK STEPS	MFG LIMITS
	17.040	Less than or equal to 10%		Verify the UUT BOTTOM receiver does NOT recognize interrogations as ATCRBS Mode A/Mode S All Call when the P4 pulse width is 2.5 uSec. Connect UUT TOP antenna to RF I/O port			On the ground station test equipment the Mode S % reply shall display as specified. NOTE: On IFR equipment the reading is taken from the S1403. On the ground station test equipment connect the UUT TOP antenna to the RF I/O port and the UUT BOTTOM antenna to the other RF input On the ground station test equipment set; P4: Width -0.40	Less than or equal to 1%
AA	17.050	Less than or equal to 10%		Verify the UUT TOP receiver does NOT recognize interrogations as ATCRBS Mode A/Mode S All Call when the P4 pulse width is 1.2 uSec.			On the ground station test equipment the Mode S % reply shall display as specified. NOTE: On IFR equipment the reading is taken from the S1403. On the ground station test equipment set; P4: Width -0.10	Less than or equal to 1%
AA	17.060	Greater than or equal to 90%		Verify the UUT TOP receiver Recognizes interrogations as ATCRBS Mode A/Mode S All Call when the P4 pulse width is 1.5 uSec.			On the ground station test equipment the Mode S % reply shall display as specified. NOTE: On IFR equipment the reading is taken from the S1403. On the ground station test equipment set; P4: Width +0.10	Greater than or equal to 99%

REV	TEST	SPECIFICATION			PROCEDURE			SPECIFICATION
LTR	NO.	OPR LIMITS	C	TEST DESCRIPTION	SWITCH POS	C	WORK STEPS	MFG LIMITS
AA	17.070	Greater than or equal to 90%		Verify the UUT TOP receiver Recognizes interrogations as ATCRBS Mode A/Mode S All Call when the P4 pulse width is 1.7 uSec.			On the ground station test equipment the Mode S % reply shall display as specified. NOTE: On IFR equipment the reading is taken from the S1403. On the ground station test equipment set; P4: Width +0.90	Greater than or equal to 99%
AA	17.080	Less than or equal to 10%		Verify the UUT TOP receiver does NOT recognize interrogations as ATCRBS Mode A/Mode S All Call when the P4 pulse width is 2.5 uSec. Set the RF test set for standard interrogations Re-connect UUT BOTTOM antenna to RF I/O port and UUT TOP antenna to the other RF port.			On the ground station test equipment the Mode S % reply shall display as specified. NOTE: On IFR equipment the reading is taken from the S1403. On the ground station test equipment set; P4: Width CAL On the ground station test equipment re-connect UUT BOTTOM antenna to RF I/O port and UUT TOP antenna to the other RF port.	Less than or equal to 1%

REV	TEST	SPECIFICATION			PROCEDURE			SPECIFICATION
LTR	NO.	OPR LIMITS	C	TEST DESCRIPTION	SWITCH POS	C	WORK STEPS	MFG LIMITS
R	18.000			P1/P3 PULSE WIDTH Interrogate the transponder with 600 ATCRBS Mode A interrogations with variable P1/P3 width.	Test Setup #2		P1/P3 PULSE WIDTH On the ground station test equipment set: ATC (ATCRBS only) mode, PRF/SQTR: 600. On the ground station test equipment set; XPDR PULSE WIDTH: 0.30 and VAR.	
	18.010	Less than or equal to 10%		Verify no reply is generated when the P1/P3 pulse width on the UUT BOTTOM receiver is 0.30 uSec.			On the ground station test equipment the ATC % reply shall be as specified. NOTE: On IFR equipment this reading is read from the S1403. On the ground station test equipment set; XPDR PULSE WIDTH: 0.70	Less than or equal to 1%
	18.020	Greater than or equal to 90%		Verify replies are generated when the P1/P3 pulse width on the UUT BOTTOM receiver is 0.70 uSec.			On the ground station test equipment the ATC % reply shall be as specified. NOTE: On IFR equipment this reading is read from the S1403. On the ground station test equipment set; XPDR PULSE WIDTH: 0.90	Greater than or equal to 99%
	18.030	Greater than or equal to 90%		Verify replies are generated when the P1/P3 pulse width on the UUT BOTTOM receiver is 0.90 uSec. Connect UUT TOP antenna to test equipment.			On the ground station test equipment the ATC % reply shall be as specified. NOTE: On IFR equipment this reading is read from the S1403. On the ground station test equipment connect the UUT TOP antenna to he RF I/O port and the UUT BOTTOM antenna to the other RF port.	Greater than or equal to 99%

REV	TEST	SPECIFICATION			PROCEDURE			SPECIFICATION
LTR	NO.	OPR LIMITS	C	TEST DESCRIPTION	SWITCH POS	C	WORK STEPS	MFG LIMITS
							On the ground station test equipment set; XPDR PULSE WIDTH: 0.30	
	18.040	Less than or equal to 10%		Verify no reply is generated when the P1/P3 pulse width on the UUT TOP receiver is 0.30 uSec.			On the ground station test equipment the ATC % reply shall be as specified. NOTE: On IFR equipment this reading is read from the S1403.	Less than or equal to 1%
							On the ground station test equipment set; XPDR PULSE WIDTH: 0.70	
	18.050	Greater than or equal to 90%		Verify replies are generated when the P1/P3 pulse width on the UUT TOP receiver is 0.70 uSec.			On the ground station test equipment the ATC % reply shall be as specified. NOTE: On IFR equipment this reading is read from the S1403.	Greater than or equal to 99%
							On the ground station test equipment set; XPDR PULSE WIDTH: 0.90	
	18.060	Greater than or equal to 90%		Verify replies are generated when the P1/P3 pulse width on the UUT TOP receiver is 0.90 uSec.			On the ground station test equipment the ATC % reply shall be as specified. NOTE: On IFR equipment this reading is read from the S1403.	Greater than or equal to 99%
				Set the RF test set for standard interrogations.			On the ground station test equipment set; PRF/SQTR: 60, XPDR PULSE WIDTH 0.00, MODE S (Mode S Only)	

REV	TEST	SPECIFICATION			PROCEDURE			SPECIFICATION
LTR	NO.	OPR LIMITS	C	TEST DESCRIPTION	SWITCH POS	C	WORK STEPS	MFG LIMITS
P				Re-connect UUT BOTTOM antenna to the test equipment RF I/O port and the UUT TOP antenna to the other antenna port.			On the ground station test equipment re-connect UUT BOTTOM antenna to the test equipment RF I/O port and the UUT TOP antenna to the other antenna port.	
	19.000			MODE S SYNC PHASE REVERAL (SPR) POSITION.	Test Setup #2		MODE S SYNC PHASE REVERAL (SPR) POSITION On the ground station test equipment set: SPR DEVIATION: -0.20	
AF	19.010	Less than or equal to 1%		Verify no reply is generated when the P6 to SPR delay on the UUT BOTTOM receiver is 1.05 uSec.			On the ground station test equipment the Mode S %Reply shall be as specified. NOTE: On IFR equipment this reading is read from the S1403. On the ground station test equipment set: SPR DEVIATION: -0.05	Less than or equal to 1%
AF	19.020	Greater than or equal to 99%		Verify replies are generated when the P6 to SPR delay on the UUT BOTTOM receiver is 1.20 uSec.			On the ground station test equipment the Mode S %Reply shall be as specified. NOTE: On IFR equipment this reading is read from the S1403. On the ground station test equipment set: SPR DEVIATION: +0.05	Greater than or equal to 99%
AF	19.030	Greater than or equal to 99%		Verify replies are generated when the P6 to SPR delay on the UUT BOTTOM receiver is 1.30 uSec.			On the ground station test equipment the Mode S %Reply shall be as specified. NOTE: On IFR equipment this reading is read from the S1403. On the ground station test equipment set: SPR DEVIATION: +0.20	Greater than or equal to 99%

REV	TEST	SPECIFICATION			PROCEDURE			SPECIFICATION
LTR	NO.	OPR LIMITS	C	TEST DESCRIPTION	SWITCH POS	C	WORK STEPS	MFG LIMITS
	19.040	Less than or equal to 1%		Verify no reply is generated when the P6 to SPR delay on the UUT BOTTOM receiver is 1.45 uSec.			On the ground station test equipment the Mode s %Reply shall be as specified. NOTE: On IFR equipment this reading is read from the S1403.	Less than or equal to 1%
				Connect UUT TOP antenna to the test equipment RF I/O port.			On the ground station test equipment connect the UUT TOP antenna port to the RF I/O port and the UUT BOTTOM antenna to the other port. On the ground station test equipment set: SPR DEVIATION: -0.20	
	19.050	Less than or equal to 1%		Verify no reply is generated when the P6 to SPR delay on the UUT TOP receiver is 1.05 uSec.			On the ground station test equipment the Mode S %Reply shall be as specified. NOTE: On IFR equipment this reading is read from the S1403. On the ground station test equipment set: SPR DEVIATION: -0.05	Less than or equal to 1%
	19.060	Greater than or equal to 99%		Verify replies are generated when the P6 to SPR delay on the UUT TOP receiver is 1.20 uSec.			On the ground station test equipment the Mode S %Reply shall be as specified. NOTE: On IFR equipment this reading is read from the S1403. On the ground station test equipment set: SPR DEVIATION: +0.05	Greater than or equal to 99%
AF	19.070	Greater than or equal to 99%		Verify replies are generated when the P6 to SPR delay on the UUT TOP receiver is 1.30 uSec.			On the ground station test equipment the Mode S %Reply shall be as specified. NOTE: On IFR equipment this reading is read from the S1403.	Greater than or equal to 99%

REV	TEST	SPECIFICATION			PROCEDURE			SPECIFICATION
LTR	NO.	OPR LIMITS	C	TEST DESCRIPTION	SWITCH POS	C	WORK STEPS	MFG LIMITS
							On the ground station test equipment set: SPR DEVIATION: +0.20	
	19.080	Less than or equal to 1%		Verify no reply is generated when the P6 to SPR delay on the UUT TOP receiver is 1.45uSec.			On the ground station test equipment the Mode S %Reply shall be as specified. <u>NOTE:</u> On IFR equipment this reading is read from the S1403.	Less than or equal to 1%
				Set RF test set for standard interrogations.			On the ground station test equipment set; SPR DEVIATION: CAL/OFF	
				Re-connect UUT BOTTOM antenna cable to RF I/O port and the UUT TOP antenna to the other RF port.			Re-connect UUT BOTTOM antenna cable to RF I/O port and the UUT TOP antenna to the other RF port.	

REV	TEST	SPECIFICATION			PROCEDURE			SPECIFICATION
LTR	NO.	OPR LIMITS	C	TEST DESCRIPTION	SWITCH POS	C	WORK STEPS	MFG LIMITS
P								
	20.000			DIVERSITY OPERATION Interrogate the unit with a Mode S interrogation on the TOP and BOTTOM antenna.	Test Setup #2		DIVERSITY OPERATION NOTE: The TOP and BOTTOM antenna cables shall be matched per the requirements in paragraph 3.5. On the ground station test equipment set the UUT TOP antenna for 50 dBm, delay -0.15 (delay by 125 nSec), UUT BOTTOM Antenna RF LEVEL -47 dBm. NOTE: On IFR equipment the UUT top antenna is connected to the S1403. All TOP ANT adjustments will have to be done using the ANT B adjustment.	
	20.010	Greater than or equal to 90%		Interrogate the transponder with: Mode S interrogations TOP RF Level: -50 dBm, BOT RF Level: -47 dBm, DELAY: TOP 125 nSec before TOP. Verify transponder replies on the BOTTOM antenna.			The Mode S % percent reply for the UUT BOTTOM antenna shall be as specified. NOTE: On IFR equipment the reading will be taken with the S1403. On the ground station test equipment set interrogations for ATCRBS Mode A	Greater than or equal to 99%
	20.020	Greater than or equal to 90%		Interrogate the transponder with: ATCRBS Mode A interrogations TOP RF Level: -50 dBm, BOT RF Level: -47 dBm, DELAY: TOP 125 nSec before TOP. Verify transponder replies on the BOTTOM antenna.			The ATC % percent reply for the UUT BOTTOM antenna shall be as specified. NOTE: On IFR equipment the reading will be taken with the S1403.	Greater than or equal to 99%

REV	TEST	SPECIFICATION			PROCEDURE			SPECIFICATION
LTR	NO.	OPR LIMITS	C	TEST DESCRIPTION	SWITCH POS	C	WORK STEPS	MFG LIMITS
							On the ground station test equipment set interrogations for Mode S, UUT BOTTOM antenna RF I/O LEVEL: -53	
	20.030	Greater than or equal to 90%		Interrogate the transponder with: Mode S interrogations TOP RF Level: -50 dBm, BOT RF Level: -53 dBm, DELAY: TOP 125 nSec before TOP. Verify transponder replies on the TOP antenna.			The MODE S % percent reply for the UUT TOP antenna shall be as specified. NOTE: On IFR equipment the reading is taken from the AntB display. On the ground station test equipment set: MODE S interrogations, UUT TOP antenna for 50 dBm, delay +0.15 (delay by 125 nSec), UUT BOTTOM Antenna RF LEVEL -53 dBm. NOTE: On IFR equipment the UUT top antenna is connected to the S1403. All TOP ANT adjustments will have to be done using the ANTB adjustment.	Greater than or equal to 99%
	20.040	Greater than or equal to 90%		Interrogate the transponder with: MODE S interrogations, TOP ANT RF Level: -50 dBm, BOT ANT RF Level: -53 dBm, DELAY: 125 nSec AFTER BOT ANT. Verify transponder replies on the TOP ANT.			The MODE S % percent reply for the UUT TOP antenna shall be as specified. NOTE: On IFR equipment the reading is taken from the AntB display.	Greater than or equal to 99%

REV	TEST	SPECIFICATION			PROCEDURE			SPECIFICATION
LTR	NO.	OPR LIMITS	C	TEST DESCRIPTION	SWITCH POS	C	WORK STEPS	MFG LIMITS
R							On the ground station test equipment set: ATCRBS MODE A interrogations, UUT TOP antenna for 50 dBm, delay +0.15 (delay by 125 nSec), UUT BOTTOM Antenna RF LEVEL -53 dBm. NOTE: On IFR equipment the UUT top antenna is connected to the S1403. All TOP ANT adjustments will have to be done using the ANTB adjustment.	
	20.050	Greater than or equal to 90%		Interrogate the transponder with: ATCRBS Mode A Interrogations, TOP ANT RF Level: -50 dBm, BOT ANT RF Level: -53 dBm, DELAY: 125 nSec AFTER BOT ANT. Verify transponder replies on the TOP ANT.			The ATC % percent reply for the UUT TOP antenna shall be as specified. NOTE: On IFR equipment the reading is taken from the AntB display.	Greater than or equal to 99%
							On the ground station test equipment set: MODE S interrogations, UUT TOP antenna for 50 dBm, delay +0.15 (delay by 125 nSec), UUT BOTTOM Antenna RF LEVEL -47dBm. NOTE: On IFR equipment the UUT top antenna is connected to the S1403. All TOP ANT adjustments will have to be done using the ANTB adjustment.	

REV	TEST	SPECIFICATION			PROCEDURE			SPECIFICATION
LTR	NO.	OPR LIMITS	C	TEST DESCRIPTION	SWITCH POS	C	WORK STEPS	MFG LIMITS
AF	20.060	Greater than or equal to 90%		Interrogate the transponder with Mode S interrogations, TOP ANT RF Level: -50 dBm, BOT ANT RF Level: - 47dBm, DELAY: 125 nSec AFTER BOT ANT. Verify transponder replies on the BOTTOM ANT.			The MODE S % percent reply for the UUT BOTTOM antenna shall be as specified. On the ground station test equipment set: MODE S interrogations, UUT TOP antenna for 50 dBm, delay +0.35 (delay by 375 nSec), UUT BOTTOM Antenna RF LEVEL -74 dBm. NOTE: On IFR equipment the UUT top antenna is connected to the S1403. All TOP ANT adjustments will have to be done using the ANTB adjustment.	Greater than or equal to 99%
AF								
AF	20.070	Greater than or equal to 90%		Interrogate the transponder with Mode S interrogations, TOP ANT RF Level: -50 dBm, BOT ANT RF Level: - 74dBm, DELAY: 375 nSec AFTER BOT ANT. Verify transponder replies on the BOTTOM ANT. Connect the UUT TOP antenna to RF I/O port and UUT BOT antenna to the MODE S antenna port.			The MODE S % percent reply for the UUT BOTTOM antenna shall be as specified. Connect the UUT TOP antenna to RF I/O port and UUT BOT antenna to the MODE S antenna port.	Greater than or equal to 99%

REV	TEST	SPECIFICATION			PROCEDURE			SPECIFICATION
LTR	NO.	OPR LIMITS	C	TEST DESCRIPTION	SWITCH POS	C	WORK STEPS	MFG LIMITS
AF	20.080	Greater than or equal to 90%		Interrogate the transponder with Mode S interrogations, TOP ANT RF Level: -74 dBm, BOT ANT RF Level: - 50 dBm, DELAY: 375 nSec AFTER BOT ANT. Verify transponder replies on the TOP ANT.			The MODE S % percent reply for the UUT BOTTOM antenna shall be as specified.	Greater than or equal to 99%
				Re-connect UUT BOT antenna cable to RF I/O port and UUT TOP antenna MODE S port.			On the ground station test equipment re-connect UUT BOT antenna cable to RF I/O port and UUT TOP antenna MODE S port.	
AF				Set the RF test equipment for standard interrogations.			On the ground station test equipment set: MODE A interrogations, UUT TOP antenna for 50 dBm, delay off, UUT BOTTOM Antenna RF LEVEL - 67 dBm.	

REV	TEST	SPECIFICATION			PROCEDURE			SPECIFICATION
LTR	NO.	OPR LIMITS	C	TEST DESCRIPTION	SWITCH POS	C	WORK STEPS	MFG LIMITS
AF								
	21.000			MUTUAL SUPPRESSION	Test Setup #2		MUTUAL SUPPRESSION On the ground station test equipment set interrogations to ATCRBS, PRF/SQTR: 600 Connect and oscilloscope probe to the RTIU P2-T1. Adjust the oscilloscope to measure a 26 Volt 30 uSec pulse.	
AC	21.010	22.0 to 32.0 VDC (26.0 nominal)		Verify mutual suppression line goes active when replying to ATCRBS interrogations. MUT_SUP(P) pin: -901, -906 A2A1P1-3 (H) -902, 903, 904 A2A2J4-1 (H) -855, -856, -857, -865, -866, -867, -875 A2A7J3-30 (H)			The pulse amplitude on the oscilloscope shall be as specified.	23.0 to 29.0 VDC (26.0 nominal)
AE AE				RTIU P2T1				
	21.020	20.0 to 40.0 uSec (30.0 nominal)		Verify the duration of the mutual suppression pulse.			The pulse width (measured from 50% to 50% voltage point) of the mutual suppression pulse shall be as specified. On the ground station test equipment connect the mutual suppression output to the RTIU test point P2T1. On the ground station test equipment set INTERFERENCE PULSE: +5.0, SUPPRESSOR: ON	25.0 to 35.0 uSec (30.0 nominal)

REV	TEST	SPECIFICATION			PROCEDURE			SPECIFICATION
LTR	NO.	OPR LIMITS	C	TEST DESCRIPTION	SWITCH POS	C	WORK STEPS	MFG LIMITS
AF								
	21.030	Equal to 0%		Externally activate the mutual suppression line with pulse amplitude of 18.0V. Verify no replies are generated.			The ATC % percent reply for the UUT BOTTOM antenna shall be as specified	Equal to 0%
				Disconnect mutual suppression pulse.			On the ground station test equipment set INTERFERENCE PULSE: 0.0, OFF; SUPPRESSOR: OFF	
	21.040	Greater than or equal to 90%		Verify the transponder replies to ATCRBS Interrogations.			The ATC % percent reply for the UUT BOTTOM antenna shall be as specified	Greater than or equal to 99%
				Set RF test set for standard interrogations.			On the ground station test equipment set PRF/SQTR: 60, MODE S ONLY interrogations.	

REV	TEST	SPECIFICATION			PROCEDURE			SPECIFICATION
LTR	NO.	OPR LIMITS	C	TEST DESCRIPTION	SWITCH POS	C	WORK STEPS	MFG LIMITS
AF								
	22.000			DISCRETE INPUTS	Test Setup #2		DISCRETE INPUTS	
AB				**(-901, -906 MODULES ONLY**			**(-901, -906 MODULES ONLY**	
				Select ENC ALT 1 inputs. (-925 RTIU Harness).	<N>		Disc/Analog Page	
					<S>		SEL ENC ALT	
					<1>		ALT 1	
					<P>		RCB Page	
				Select BENCH Discrete DISPLAY 2	<H>		Main Bench Page	
					<N>		Bench Analog Page	
					<I>		Discrete Pages	
					<2>		2	
				Write alternating OPEN(0)/GROUND(1) patterns to the discrete inputs for INPUT PORT 0 and INPUT PORT 1. Ports are listed in order from Bit 7 to Bit 0.	<T>		Change Input Ports -	
					<10101010>		10101010	
					<10101010>		10101010	
							-	

Input Port 0	A2A3P1-
ENC ALT1 D2(NO)	56
ENC ALT1 D4(NO)	57
ENC ALT1 A1(NO)	58
ENC ALT1 A2(NO)	67
ENC ALT1 A4(NO)	68
ENC ALT1 B1(NO)	69
ENC ALT1 B2(NO)	70
ENC ALT1 B4(NO)	71

Input Port 1	A2A3P1-
Squat Switch2(NO)	75
XPDR STANDY(NO)	72
CTL SRC SEL1(NO)	61
ALT SRC SEL2(NO)	60
ALT COMP ENA(NO)	59
ENC ALT1 C1(N0)	53
ENC ALT1 C2(NO)	54
ENC ALT1 C4(NO)	55

REV	TEST	SPECIFICATION			PROCEDURE			SPECIFICATION
LTR	NO.	OPR LIMITS	C	TEST DESCRIPTION	SWITCH POS	C	WORK STEPS	MFG LIMITS
AF								
	22.010	Port 0 = 10101010		Verify the correct values are read from PORT 0 and PORT 1.			The XPDR column on the RTIU display for INPUT PORT 0 and INPUT 1 shall be as specified. (Bit 7 on the RTIU corresponds to first digit in LIMITS column)	Port 0 = 10101010
	22.020	Port 1 = 10101010						Port 1 = 10101010
				Reverse OPEN/GROUND pattern written in the previous test.	<T>		CHANGE INPUT PORTS	
					<01010101>		01010101	
					<01010101>		01010101	
	22.030	Port 0 = 01010101		Verify the correct values are read from PORT 0 and PORT 1.			The XPDR column on the RTIU display for INPUT PORT 0 and INPUT 1 shall be as specified. (Bit 7 on the RTIU corresponds to first digit in LIMITS column)	Port 0 = 01010101
	22.040	Port 1 = 01010101						Port 1 = 01010101
				Set Port pattern to default value.	<T>		Change Input Port	
					<00000000>		00000000	
					<00000000>		00000000	
				Select ENC ALT 2 inputs. (-925 RTIU Harness).	<P>		Bench Analog Page	
					<P>		Main Bench Page	
					<P>		RCB Page	
					<N>		Disc/Analog Page	
					<S>		SEL ENC ALT	
					<2>		2	
					<P>		RCB Page	
				Select BENCH DISCRETE DISPLAY 3	<H>		Main Bench Page	
					<N>		Bench Analog Page	
					<I>		Discrete Pages	
					<3>		3	

REV	TEST	SPECIFICATION			PROCEDURE			SPECIFICATION
LTR	NO.	OPR LIMITS	C	TEST DESCRIPTION	SWITCH POS	C	WORK STEPS	MFG LIMITS
AF				Write alternating OPEN(0)/GROUND(1) patterns to the discrete inputs for INPUT PORT 2 and INPUT PORT 3. Ports are listed in order from Bit 7 to Bit 0.	<T> <10101010> <10101010>		Change Input Ports 10101010 10101010	
	22.050	PORT 2 = 10101010		Verify the correct values are read form PORT 2 and Port 3.			The XPDR column on the RTIU display for INPUT PORT 2 and INPUT 3 shall be as specified. (Bit 7 on the RTIU corresponds to first digit in LIMITS column)	Port 2 = 10101010
	22.060	PORT 3 = 10101010						Port 3 = 10101010
				Reverse OPEN/GROUND pattern written in the previous test.	<T> <01010101> <01010101>		Change Input Ports 01010101 01010101	

Input Port 0	A2A3P1-
ENC ALT2 D2(NO)	83
ENC ALT2 D4(NO)	84
ENC ALT2 A1(NO)	58
ENC ALT2 A2(NO)	94
ENC ALT2 A4(NO)	95
ENC ALT2 B1(NO)	96
ENC ALT2 B2(NO)	97
ENC ALT2 B4(NO)	98
Squat Switch1(NO)	73
RSV INUT 4(NO)	89
RSV INPUT 3(NO)	88
RSV INPUT 2(NO)	87
RSV INPUT 1(NO)	86
ENC ALT2 C1(N0)	80
ENC ALT2 C2(NO)	81
ENC ALT2 C4(NO)	82

REV	TEST	SPECIFICATION			PROCEDURE			SPECIFICATION
LTR	NO.	OPR LIMITS	C	TEST DESCRIPTION	SWITCH POS	C	WORK STEPS	MFG LIMITS
AF								
	22.070	PORT 2 = 01010101		Verify the correct values are read form PORT 2 and PORT 3.			The XPDR column on the RTIU display for INPUT PORT 2 and INPUT 3 shall be as specified. (Bit 7 on the RTIU corresponds to first digit in LIMITS column)	PORT 2 = 01010101
	22.080	PORT 3 = 01010101						PORT 3 = 01010101
				Set port pattern to default values.	<T>		Change Input Ports	
					<00000000>		00000000	
					<00000000>		00000000	
				Return to RCB Page.	<P>		Bench Analog Page	
					<P>		Main Bench Page	
					<P>		RCB Page	

REV	TEST	SPECIFICATION			PROCEDURE			SPECIFICATION
LTR	NO.	OPR LIMITS	C	TEST DESCRIPTION	SWITCH POS	C	WORK STEPS	MFG LIMITS
AF AB	23.000			DISCRETE OUTPUTS **-901, -906 MODULES ONLY)** Select Bench Discrete Display 1 Set the discrete outputs to alternating ON/OFF states. Ports are listed in order from Bit 7 to Bit 0.	Test Setup #2 <H> <N> <I> <1> <T> <00010101> <10000000>		DISCRETE OUTPUTS **-901, -906 MODULES ONLY)** Main Bench Page Bench Analog Page Discrete Pages 1 Test I/O Port 00010101 10000000 NOTE: Wait 7 seconds to allow monitors to operate correctly.	
	23.010	Port 0 = 1010		Verify Discrete outputs for Output Port 0, Bits 4 to 1 are in the correct state.			Observe the column on the RTIU display for OUTPUT PORT 0 BITS 4 to 1. The display shall indicate as specified. (Bit 4 corresponds to first digit in Limits Specification.	PORT 0 = 1010

OUTPUT PORT 0	A2A3P1-
RESERVED	-
RESERVED	-
RESERVED	-
ALT VALID(NO)	102
RSV OUTPUT1(NO)	101
XPDR ACTIVE(NO)	99
XPDR VALID(NO)	100
XPDRVALID(PO)	23

OUTPUT PORT 1	A2A3P1-
STRAP_PGM(N(O)	104
STRAP PGM DAT	104
STRAP LOAD	92
STRAP CLK	-
RESERVED	-
RESERVED	-
SELECT SPARE2/1*	-
FAN ENABLE	-

REV	TEST	SPECIFICATION			PROCEDURE			SPECIFICATION
LTR	NO.	OPR LIMITS	C	TEST DESCRIPTION	SWITCH POS	C	WORK STEPS	MFG LIMITS
AF								
V	23.020	Greater than or equal to 24.0 VDC		Verify XPDR VALID(PO) output voltage is correct.			Observed the column on the RTIU display for XPDR VALID(PO). The display shall be as specified. (OUTPUT PORT 0 BIT 0)	Greater than or equal to 24.0 VDC
	23.030	PORT 1 = 10		Verify Discrete outputs for Output Port 1, Bits 7 and 6 are in the correct state.			Observe the column on the RTIU display for OUTPUT PORT 1 BITS 7 and 6. The display shall be as specified. (Bit 7 corresponds to first digit in Limits Specification).	PORT 1 = 10
				Reverse ON/OFF state pattern written in previous test.	<T>		Test I/O Port	
					<00001010>		00001010	
					<01000000>		01000000	
							NOTE: Wait 7 seconds to allow monitors to operate correctly.	
	23.040	PORT 0 = 0101		Verify discrete outputs for Output Port 0, Bits 4 to 1 are in the correct state.			Observe the column on the RTIU display for Output Port 0 BITS 4 to 1. The display shall be as specified.	PORT 0 = 0101
V	23.050	Less than or equal to 2.0 VDC		Verify XPDR VALID(PO) output voltage is correct.			Observe the column on the RTIU display for XPDR VALID(PO). The reading shall be as specified. (Output Port 0 BIT 0)	Less than or equal to 2.0 VDC
	23.060	PORT 1 = 01		Verify discrete output for Output Port 1, Bits 7 and 6 are in the correct state.			Observe the column on the RTIU for Output Port 1 Bits 7 and 6. The reading shall be as specified.	PORT 1 = 01
				Select Bench discrete Display 4	<P>		Bench Analog Page	
					<I>		Discrete Pages	
					<4>		4	

REV	TEST	SPECIFICATION			PROCEDURE			SPECIFICATION
LTR	NO.	OPR LIMITS	C	TEST DESCRIPTION	SWITCH POS	C	WORK STEPS	MFG LIMITS
AF	23.070	PORT 4 = 11000000		Verify discrete output monitors are in the correct state (INPUT PORT 4)			Observe the column on the RTIU for Input Port 4 Bits 7 to 0. The display shall be as specified.	PORT 4 = 11000000
				Select Aircraft Maintenance Log	<P>		Bench Analog Page	
					<P>		Main Bench Page	
					<P>		RCB Page	
AG								
					<M>		Maintenance Log	
					<A>		Aircraft	
	23.080	END LIST		Verify no errors for the discrete outputs are logged in the TROUBLESHOOT maintenance log.			Observe the RTIU discription column display. The display shall be as specified.	END LIST
				Return to the RCB Page	<P>		RCB Page	

REV	TEST	SPECIFICATION			PROCEDURE			SPECIFICATION
LTR	NO.	OPR LIMITS	C	TEST DESCRIPTION	SWITCH POS	C	WORK STEPS	MFG LIMITS
	24.000			FAN/STRAP INTERFACES	Test Setup #2		FAN/STRAP INTERFACES	
AB				**(-901, -906 MODULE, MOD B OR LATER ONLY**			**(-901, -906 MODULE, MOD B OR LATER ONLY**	
				Select Bench Page	<H>		Main Bench Page	
					<N>		Bench Analog Page	
				Turn FAN simulator OFF	<Y>		FAN SIMULATION	
					<0>		0	
				Turn FAN OFF	<F>		FAN Test	
AF					<F>		OFF	
V	24.010	Greater than or equal to 25.0 VDC		Verify FAN SUPPLY voltage is a specified.			Observe the RTIU display for FAN SUPPLY. The display shall read as specified.	Greater than or equal to 25.0 VDC
V	24.020	Greater than or equal to 25.0 VDC		Verify FAN RETURN voltage is as specified.			Observe the RTIU display for FAN RETURN. The display shall read as specified.	Greater than or equal to 25.0 VDC
	24.030	OFF		Verify FAN TEST status monitor is OFF			Observe the RTIU display for FAN TEST. The display shall read as specified.	OFF
AF				Turn FAN ON	<F>		FAN Test	
					<0>		ON	
				Turn FAN simulator ON (100 MHz)	<Y>		FAN Simulation	
					<100>		100	
	24.040	ON		Verify FAN TEST status monitor is ON.			Observe the RTIU display for FAN TEST. The display shall read as specified.	ON
V	24.050	Less than or equal to 5.0 VDC		Verify FAN RETURN voltage is as specified.			Observe the RTIU display for FAN RETURN. The display shall read as specified.	Less than or equal to 5.0 VDC
				Select BENCH STRAPS PAGE, Read straps.	<N>		Bench Straps Page	
					<R>		Read Straps	

REV	TEST	SPECIFICATION			PROCEDURE			SPECIFICATION
LTR	NO.	OPR LIMITS	C	TEST DESCRIPTION	SWITCH POS	C	WORK STEPS	MFG LIMITS
P								
	24.060	PASS		Verify RCB source straps are identical to RTIU SOURCE strap data			Observe the RTIU display. RCB Source Straps Wires 1-48 shall be equal to RTIU Source strap wires 1-48.	PASS
				Configure straps for STAND-ALONE, RCB TUNING. (W1 = 0, W2 - 0).	<S>		Change Straps	
					<1>		1	
					<S>		Change Straps	
					<2>		2	
				Select Configuration Page	<P>		Bench Analog Page	
					<P>		Main Bench Page	
					<P>		RCB Page	
					<C>		Configuration Page	
				Remove the ground from the INTEGRATE_COM(NO) discrete input. <u>INTEGRATE COM(NO):</u> A2A1J3-20 RTIU: P2M1	<G>		INTEGRATE COM	
				Cycle +28V Power to the select stand-alone module operation.			<u>RTIU:</u> Turn the 28V dc switch off.	
							Wait a minimum of 7 seconds.	
							<u>RTIU:</u> Turn the 28V dc switch on.	
	24.070	NO ERRORS		Verify no RCB errors occur.			Observe the RTIU display. The ERRORS display between the vertical lines shall display as specified. (NO ERRORS means nothing is displayed).	NO ERRORS
				Connect a ground signal to INTEGRATE COM(NO) discrete input.	<G>		INTEGRATE COM	

REV	TEST	SPECIFICATION			PROCEDURE			SPECIFICATION
LTR	NO.	OPR LIMITS	C	TEST DESCRIPTION	SWITCH POS	C	WORK STEPS	MFG LIMITS
P				Cycle +28V Power to the select stand-alone module operation.			RTIU: Turn the 28V dc switch off.	
							Wait a minimum of 7 seconds.	
							RTIU: Turn the 28V dc switch on.	
				Disable SQUITTER and select RCB Page	<P>		RCB Page	
					<H>		Main Bench Page	
					<N>		Bench Analog Page	
					<Q>		Squitter	
					<D>		Disable	
					<P>		Main Bench Page	
					<P>		RCB Page	

REV	TEST	SPECIFICATION			PROCEDURE			SPECIFICATION
LTR	NO.	OPR LIMITS	C	TEST DESCRIPTION	SWITCH POS	C	WORK STEPS	MFG LIMITS
	25.000			ARINC 429 BUSSES	Test Setup #2		ARINC 429 BUSSES	
AB				**(-901, -906 MODULE ONLY, MOD - OR A ONLY**			**(-901, -906 MODULE ONLY, MOD - OR A ONLY**	
				Set XPDR Module straps for:	<C>		Configuration Page	
				TCAS Installed	<I>		TCAS Installed	
				DLP Installed	<L>		DLP Installed	
				ARINC 419 ADC Source	<A>		Altitude Source	
					<2>		429	
				Cycle +28V power to the selected straps.			RTIU: Turn the 28V dc switch on the RTIU to OFF.	
							Wait a minimum of 7 seconds.	
							RTIU: Turn the 28V dc switch on the RTIU to ON.	
				Apply ARINC 429 signal to TCAS->XPDR bus receiver channel and select TCAS->XPDR receiver test:	<P>		RCB Page	
					<H>		Main Bench	
					<J>		Select 429 Bus	
					<1>		TCAS	
				A2A3P1- TCAS->XPDR_A 40 TCAS->XPDR_B 41	<L>		LOADED	
					<A>		Test ARINC 429	
					<H>		High speed	
					<6>		No Transmit	
					<4>		TCAS	
					<00000000>		00000000	
AF				Set ARINC 429 test to transmit Label 203, Data 111111.			429 Test equipment Set: Connect 429 inputs to RTIU per paragraph 3.11 TX SPEED: HIGH TX DATA: 111111	
	25.010	111111C1		Verify ARINC 429 data is received on the TCAS->XPDR bus.			Observe the RTIU display. The ARINC WORD displayed shall be as specified.	111111C1

REV	TEST	SPECIFICATION			PROCEDURE			SPECIFICATION
LTR	NO.	OPR LIMITS	C	TEST DESCRIPTION	SWITCH POS	C	WORK STEPS	MFG LIMITS
P								
				Apply ARINC 429 signal to DLP_A/B->XPDR bus receiver channel and select DLP_A/B->XPDR receiver test: A2A3P1- DLP_A/B->XPDR _A 42 DLP_A/B->XPDR _B 43	<B> <J> <2> <L> <A> <H> <6> <3> <00000000>		Read SW Version Select 429 Bus DLP_A/B LOADED Test ARINC 429 High speed No Transmit DLP_A/B 00000000	
				Set ARINC test set to transmit Label 203, Data 222222.			429 Test equipment Set: TX DATA: 222222	
	25.020	222222C1		Verify ARINC 429 data is received on the DLP_A/B->XPDR bus.			Observe the RTIU display. The ARINC WORD displayed shall be as specified.	222222C1
				Apply ARINC 429 signal to DLP_C/D->XPDR bus receiver channel and select DLP_C/D->XPDR receiver test: A2A3P1- DLP_C/D->XPDR _A 44 DLP_C/D->XPDR _B 45	<B> <J> <3> <L> <A> <H> <6> <5> <00000000>		Read SW Version Select 429 Bus DLP_C/D LOADED Test ARINC 429 High speed No Transmit DLP_C/D 00000000	
				Set ARINC test set to transmit Label 203, Data 333333.			429 Test equipment Set: TX DATA: 333333	
	25.030	333333C1		Verify ARINC 429 data is received on the DLP_C/D->XPDR bus			Observe the RTIU display. The ARINC WORD displayed shall be as specified	333333C1

REV	TEST	SPECIFICATION			PROCEDURE			SPECIFICATION
LTR	NO.	OPR LIMITS	C	TEST DESCRIPTION	SWITCH POS	C	WORK STEPS	MFG LIMITS
P				Apply ARINC 429 signal to ADC1->XPDR bus receiver channel and select ADC1->XPDR receiver test: ADC1->XPDR _A A2A3P1-32 ADC1->XPDR _B A2A3P1-33	<B>		Read SW Version	
					<J>		Select 429 Bus	
					<4>		ADC1	
					<L>		LOADED	
					<A>		Test ARINC 429	
					<L>		Low speed	
					<6>		No Transmit	
					<1>		ADC1	
					<00000000>		00000000	
				Set ARINC test set to transmit Label 203, Data 444444, Low speed.			429 Test equipment Set: TX DATA: 333333 TX SPEED: Low	
	25.040	444444C1		Verify ARINC 429 data is received on the ADC1->XPDR bus			Observe the RTIU display. The ARINC WORD displayed shall be as specified	444444C1
				Apply a ground to ALT_SRC_SEL2(NO) discrete input.	<P>		RCB Page	
					<N>		Disc/Analog Page	
					<A>		Alt Src Sel2	
					<P>		RCB Page	
					<H>		Main Bench Page	
				Apply ARINC 429 signal to ADC2->XPDR bus receiver channel and select ADC2->XPDR receiver test: ADC2->XPDR _A A2A3P1-46 ADC2->XPDR _B A2A3P1-47	<B>		Read SW Version	
					<J>		Select 429 Bus	
					<5>		ADC2	
					<L>		LOADED	
					<A>		Test ARINC 429	
					<L>		Low speed	
					<6>		No Transmit	
					<9>		ADC2	
					<00000000>		00000000	
				Set ARINC test set to transmit Label 203, Data 555555.			429 Test equipment Set: TX DATA: 555555	

REV LTR	TEST NO.	SPECIFICATION OPR LIMITS	C	TEST DESCRIPTION	PROCEDURE SWITCH POS	C	WORK STEPS	SPECIFICATION MFG LIMITS
P								
	25.050	555555C1		Verify ARINC 429 data is received on the ADC2->XPDR bus			Observe the RTIU display. The ARINC WORD displayed shall be as specified	555555C1
P				Apply ARINC 429 signal to FMS->XPDR bus receiver channel and select FMS->XPDR receiver test: A2A3P1- FMS->XPDR _A 64 FMS->XPDR _B 65	<B> <J> <8> <L> <A> <L> <6> <8> <00000000>		Read SW Version Select 429 Bus ADC2 LOADED Test ARINC 429 Low speed No Transmit FMS 00000000	
				Set ARINC test set to transmit Label 203, Data 666666.			429 Test equipment Set: TX DATA: 666666	
	25.060	666666C1		Verify ARINC 429 data is received on the FMS->XPDR bus			Observe the RTIU display. The ARINC WORD displayed shall be as specified	666666C1
				Return to the RCB Page	<P>		RCB Page	
				Connect ARINC test set receiver to XPDR->TCAS bus. A2A3P1- XPDR->TCAS_A 26 XPDR->TCAS_B 27			-923 RTIU HARNESS Connect 429 test set receiver input to RTIU pins P1Y6(HI) and P1X6(LO)	
				When using the -925 harness select unloaded bus operation.	<H> <J> <1> <U> <P>		-925 RTU HARNESS Main Bench Page Select 429 bus TCAS Unloaded RCB Page	
				Set ARINC test set to receive Label 350.			429 Test equipment Set: RX LABEL: 350	

REV LTR	TEST NO.	SPECIFICATION OPR LIMITS	C	TEST DESCRIPTION	PROCEDURE SWITCH POS	C	WORK STEPS	SPECIFICATION MFG LIMITS
P								
	25.070	836000		Verify ARINC 429 data is transmitted on the XPDR->TCAS bus. <u>-923 RTIU HARNESS</u> When using the -923 RTIU harnesses connect an 800-ohm load from HI and LO input pins to ground.			Set the ARINC test set to receive data and trap LABEL 350. The data shall be as specified. <u>-923 RTIU HARNESS</u> Apply an 800-ohm resistor between RTIU P1Y6 and ground. Apply an 800-ohm resistor between RTIU P1X6 and ground. <u>-925 RTIU HARNESS</u>	836000
					<H> <J> <1> <L> <P>		Main Bench page Select 429 bus TCAS Loaded RCB Page	
	25.080	836000		Verify ARINC 429 data is transmitted on the XPDR->TCAS bus.			Set the ARINC test set to receive data and trap LABEL 350. The data shall be as specified. <u>-923 RTIU HARNESS</u> Remove the 800-ohm resistor from P1Y6 and P1X6.	836000
				Connect ARINC test set receiver to XPDR->DLP_A/B bus. A2A3P1- XPDR->DLP_A/B_A 28 XPDR->DLP_A/B_B 29			<u>-923 RTIU HARNESS</u> Connect 429 test set receiver input to RTIU pins P1Y5(HI) and P1X5(LO)	
				When using the -925 harness select unloaded bus operation.	<H> <J> <2> <U> <P>		<u>-925 RTU HARNESS</u> Main Bench Page Select 429 bus DLP_A/B Unloaded RCB Page	

REV LTR	TEST NO.	SPECIFICATION OPR LIMITS	C	TEST DESCRIPTION	PROCEDURE SWITCH POS	C	WORK STEPS	SPECIFICATION MFG LIMITS
P				Set ARINC test set to receive Label 004.			429 Test equipment Set: RX LABEL: 004	
	25.090	000000		Verify ARINC 429 data is transmitted on the XPDR->DLP_A/B bus.			Set the ARINC test set to receive data and trap LABEL 004. The data shall be as specified.	000000
				-923 RTIU HARNESS			-923 RTIU HARNESS	
				When using the -923 RTIU harnesses connect an 800-ohm load from HI and LO input pins to ground.			Apply an 800-ohm resistor between RTIU P1Y5 and ground. Apply an 800-ohm resistor between RTIU P1X5 and ground.	
							-925 RTIU HARNESS	
					<H>		Main Bench page	
					<J>		Select 429 bus	
					<2>		DLP_A/B	
					<L>		Loaded	
					<P>		RCB Page	
	25.100	000000		Verify ARINC 429 data is transmitted on the XPDR->DLP_A/B bus.			Set the ARINC test set to receive data and trap LABEL 004. The data shall be as specified.	000000
							-923 RTIU HARNESS Remove the 800-ohm resistor from P1Y5 and P1X5.	
				Connect ARINC test set receiver to XPDR->DLP_C/D bus. A2A3P1- XPDR->DLP_C/D_A 30 XPDR->DLP_C/D_B 31			-923 RTIU HARNESS Connect 429 test set receiver input to RTIU pins P1Y4(HI) and P1X4(LO)	
				When using the -925 harness select unloaded bus operation.			-925 RTU HARNESS	
					<H>		Main Bench Page	
					<J>		Select 429 bus	
					<3>		DLP_C/D	
					<U>		Unloaded	
					<P>		RCB Page	

REV	TEST	SPECIFICATION			PROCEDURE			SPECIFICATION
LTR	NO.	OPR LIMITS	C	TEST DESCRIPTION	SWITCH POS	C	WORK STEPS	MFG LIMITS
				Set ARINC test set to receive Label 004.			429 Test equipment Set: RX LABEL: 004	
	25.110	000000		Verify ARINC 429 data is transmitted on the XPDR->DLP_C/D bus.			Set the ARINC test set to receive data and trap LABEL 004. The data shall be as specified.	000000
				-923 RTIU HARNESS			-923 RTIU HARNESS	
				When using the -923 RTIU harnesses connect an 800-ohm load from HI and LO input pins to ground.			Apply an 800-ohm resistor between RTIU P1Y4 and ground. Apply an 800-ohm resistor between RTIU P1X4 and ground.	
							-925 RTIU HARNESS	
					<H>		Main Bench page	
					<J>		Select 429 bus	
					<3>		DLP_C/D	
					<L>		Loaded	
					<P>		RCB Page	
	25.120	000000		Verify ARINC 429 data is transmitted on the XPDR->DLP_C/D bus.			Set the ARINC test set to receive data and trap LABEL 004. The data shall be as specified.	000000
							-923 RTIU HARNESS Remove the 800-ohm resistor from P1Y4 and P1X4.	
T				Set XPDR Module straps for : TCAS Installed DLP Installed RCB Altitude source.	<C>		Configuration Page	
					<I>		TCAS Installed	
					<L>		DLP Installed	
					<A>		Altitude Source	
					<4>		RSB	
					<P>		RCB Page	
				Cycle the UUT +28V power to the selected straps.			RTIU: On the RTIU shut the +28V switch OFF.	
							Wait 7 seconds minimum.	
							On the RTIU turn on the +28V switch.	

REV	TEST	SPECIFICATION			PROCEDURE			SPECIFICATION
LTR	NO.	OPR LIMITS	C	TEST DESCRIPTION	SWITCH POS	C	WORK STEPS	MFG LIMITS
	26.000			ARINC 429 BUSSES	Test Setup #2		ARINC 429 BUSSES	
AB				**(-901, -906 MODULE MOD B OR LATER ONLY)**			**(-901, -906 MODULE MOD B OR LATER ONLY)**	
AF				Select Main Bench Page	<H>		Main Bench Page	
				Connect 429 inputs to RTIU per paragraph 3.11 Set ARINC 429 test equipment to even parity.				
AF				Set ARINC 429 test to transmit Label 203, Data D55555.			429 Test equipment Set: TC PARITY: EVEN TX SPEED: HIGH TX DATA: D55555	
				Apply ARINC 429 signal to TCAS->XPDR bus receiver channel and select TCAS->XPDR receiver test:	<J>		Select 429 Bus	
					<1>		TCAS	
					<L>		LOADED	
					<A>		Test ARINC 429	
				A2A3P1-	<H>		High speed	
				TCAS->XPDR_A 40				
				TCAS->XPDR_B 41	<6>		No Transmit	
					<4>		TCAS	
					<00000000>		00000000	
	26.010	D55555C1		Verify ARINC 429 data is received on the TCAS->XPDR bus.			Observe the RTIU display. The ARINC WORD displayed shall be as specified.	D55555C1
				Apply ARINC 429 signal to DLP_A/B->XPDR bus receiver channel and select DLP_A/B->XPDR receiver test:	<J>		Select 429 Bus	
					<2>		DLP_A/B	
					<L>		LOADED	
					<A>		Test ARINC 429	
				A2A3P1-	<H>		High speed	
				DLP_A/B->XPDR _A 42				
				DLP_A/B->XPDR _B 43	<6>		No Transmit	
					<3>		DLP_A/B	
					<00000000>		00000000	
AF	26.020	D55555C1		Verify ARINC 429 data is received on the DLP_A/B->XPDR bus.			Observe the RTIU display. The ARINC WORD displayed shall be as specified.	D55555C1

REV	TEST	SPECIFICATION			PROCEDURE			SPECIFICATION
LTR	NO.	OPR LIMITS	C	TEST DESCRIPTION	SWITCH POS	C	WORK STEPS	MFG LIMITS
				Apply ARINC 429 signal to DLP_C/D->XPDR bus receiver channel and select DLP_C/D->XPDR receiver test: A2A3P1- DLP_C/D->XPDR _A 44 DLP_C/D->XPDR _B 45	<J> <3> <L> <A> <H> <6> <5> <00000000>		Select 429 Bus DLP_C/D LOADED Test ARINC 429 High speed No Transmit DLP_C/D 00000000	
T				Set XPDR Module straps for: TCAS Installed DLP Installed RCB Altitude Source	<P> <C> <I> <L> <A> <4> <P>		RCB Source Page Configuration Page TCAS Installed DLP Installed Altitude Source RSB RCB Page	
				Cycle +28V power to the selected straps.			RTIU: Turn the 28VDC switch on the RTIU to OFF. Wait a minimum of 7 seconds. RTIU: Turn the 28VDC switch on the RTIU to ON.	
	26.030	D55555C1		Verify ARINC 429 data is received on the DLP_C/D->XPDR bus			Observe the RTIU display. The ARINC WORD displayed shall be as specified	D55555C1
T				Apply ARINC 429 signal to ADC1->XPDR bus receiver channel and select ADC1->XPDR receiver test: A2A3P1- ADC1->XPDR _A 32 ADC1->XPDR _B 33	<H> <J> <4> <L> <A> <L> <6> <1> <00000000>		Main Bench Display Select 429 Bus ADC1 LOADED Test ARINC 429 Low speed No Transmit ADC1 00000000	

REV LTR	TEST NO.	SPECIFICATION OPR LIMITS	C	TEST DESCRIPTION	PROCEDURE SWITCH POS	C	WORK STEPS	SPECIFICATION MFG LIMITS
				Set ARINC test set to Low speed.			429 Test equipment Set: TX SPEED: Low	
	26.040	D55555C1		Verify ARINC 429 data is received on the ADC1->XPDR bus			Observe the RTIU display. The ARINC WORD displayed shall be as specified	D55555C1
				Apply ARINC 429 signal to ADC2->XPDR bus receiver channel and select ADC2->XPDR receiver test:	<J>		Select 429 Bus	
					<5>		ADC2	
					<L>		LOADED	
					<A>		Test ARINC 429	
				A2A3P1- ADC2->XPDR _A 46 ADC2->XPDR _B 47	<L>		Low speed	
					<6>		No Transmit	
					<9>		ADC2	
					<00000000>		00000000	
	26.050	D55555C1		Verify ARINC 429 data is received on the ADC2->XPDR bus			Observe the RTIU display. The ARINC WORD displayed shall be as specified	D55555C1
T				Apply ARINC 429 signal to FMS->XPDR bus receiver channel and select FMS->XPDR receiver test:	<J>		Select 429 Bus	
					<8>		FMS	
					<L>		LOADED	
					<A>		Test ARINC 429	
				A2A3P1- FMS->XPDR _A 64 FMS->XPDR _B 65	<L>		Low speed	
					<6>		No Transmit	
					<8>		FMS	
					<00000000>		00000000	
	26.060	D55555C1		Verify ARINC 429 data is received on the FMS->XPDR bus			Observe the RTIU display. The ARINC WORD displayed shall be as specified	D55555C1

REV LTR	TEST NO.	SPECIFICATION OPR LIMITS	C	TEST DESCRIPTION	PROCEDURE SWITCH POS	C	WORK STEPS	SPECIFICATION MFG LIMITS
				Apply ARINC 429 signal to CTL1->XPDR bus receiver channel and select CTL1->XPDR receiver test: A2A3P1- CTL1->XPDR _A 34 CTL1->XPDR _B 35	<J> <6> <L> <A> <L> <6> <2> <00000000>		Select 429 Bus CTL1 LOADED Test ARINC 429 Low speed No Transmit CTL1 00000000	
	26.070	D55555C1		Verify ARINC 429 data is received on the CTL1->XPDR bus			Observe the RTIU display. The ARINC WORD displayed shall be as specified	D55555C1
				Apply ARINC 429 signal to CTL2->XPDR bus receiver channel and select CTL2->XPDR receiver test: A2A3P1- CTL2->XPDR _A 48 CTL2->XPDR _B 49	<J> <7> <L> <A> <L> <6> <10> <00000000>		Select 429 Bus CTL2 LOADED Test ARINC 429 Low speed No Transmit CTL2 00000000	
	26.080	D55555C1		Verify ARINC 429 data is received on the CTL2->XPDR bus			Observe the RTIU display. The ARINC WORD displayed shall be as specified	D55555C1
				Apply ARINC 429 signal to RSV1->XPDR bus receiver channel and select RSV1->XPDR receiver test: A2A3P1- RSV1->XPDR _A 36 RSV1->XPDR _B 37	<J> <9> <L> <A> <H> <6> <6> <00000000>		Select 429 Bus RSV1 LOADED Test ARINC 429 High speed No Transmit RSV1 00000000	
				Set ARINC test set to High speed.			<u>429 Test equipment Set:</u> TX SPEED: High	

REV	TEST	SPECIFICATION			PROCEDURE			SPECIFICATION
LTR	NO.	OPR LIMITS	C	TEST DESCRIPTION	SWITCH POS	C	WORK STEPS	MFG LIMITS
	26.090	D55555C1		Verify ARINC 429 data is received on the RSV1->XPDR bus			Observe the RTIU display. The ARINC WORD displayed shall be as specified	D55555C1
				Apply ARINC 429 signal to RSV2->XPDR bus receiver channel and select RSV2->XPDR receiver test: A2A3P1- RSV2->XPDR _A 38 RSV2->XPDR _B 39	<J> <10> <L> <A> <H> <6> <7> <00000000>		Select 429 Bus RSV2 LOADED Test ARINC 429 High speed No Transmit RSV2 00000000	
	26.100	D55555C1		Verify ARINC 429 data is received on the RSV2->XPDR bus			Observe the RTIU display. The ARINC WORD displayed shall be as specified	D55555C1
				Connect ARINC test set receiver to XPDR->TCAS bus. A2A3P1- XPDR->TCAS_A 26 XPDR->TCAS_B 27			-923 RTIU HARNESS Connect 429 test set receiver input to RTIU pins P1Y6(HI) and P1X6(LO)	
				When using the –925 harness select unloaded bus operation.	<J> <1> <U>		-925 RTU HARNESS Select 429 bus TCAS Unloaded	
				Set ARINC test set to receive Label 252.			429 Test equipment Set: RX LABEL: 252	
				Transit Label 252, Data D55555 on XPDR->TCAS bus, High speed with internal module loop-back to the TCAS->XPDR bus receiver enabled	<A> <H> <2> <14> <D5555555>		Test ARINC 429 High TCAS Bus xmit Loop-back to TCAS D5555555	

REV	TEST	SPECIFICATION			PROCEDURE			SPECIFICATION
LTR	NO.	OPR LIMITS	C	TEST DESCRIPTION	SWITCH POS	C	WORK STEPS	MFG LIMITS
P								
	26.110	D55555		Verify ARINC 429 data is transmitted on the XPDR->TCAS bus. <u>-923 RTIU HARNESS</u> When using the –923 RTIU harnesses connect an 800-ohm load from HI and LO input pins to ground.			On the ARINC test set trap Label 252. The ARINC data displayed shall be as specified <u>-923 RTIU HARNESS</u> Apply an 800-ohm resistor between RTIU P1Y6 and ground. Apply an 800-ohm resistor between RTIU P1X6 and ground. <u>-925 RTIU HARNESS</u>	D55555
					<J>		Select 429 bus	
					<1>		TCAS	
					<L>		Loaded	
	26.120	D55555		Verify ARINC 429 data is transmitted on the XPDR->TCAS bus.			On the ARINC test set trap Label 252. The data displayed shall be as specified	D55555
	26.130	8.0 to 12.0 msec (10.0 nominal)		Verify ARINC 429 data transmission rate on the XPDR->TCAS bus.			On the ARINC test set scroll to find transmission speed. The rate displayed shall be as specified	8.0 to 12.0 msec (10.0 nominal)
	26.140	D5555555		Verify ARINC 429 data is transmitted on the TCAS->XPDR bus (internal loop-back). Connect ARINC test set receiver to XPDR->DLP_A/B bus. A2A3P1- XPDR->DLP_A/B_A 28 XPDR->DLP_A/B_B 29			Observe the RTIU display. The ARINC WORD displayed shall be as specified <u>-923 RTIU HARNESS</u> Remove the 800-ohm resistors from P1Y6 and P1X6. <u>-923 RTIU HARNESS</u> Connect 429 test set receiver input to RTIU pins P1Y5(HI) and P1X5(LO)	D5555555

REV	TEST	SPECIFICATION			PROCEDURE			SPECIFICATION
LTR	NO.	OPR LIMITS	C	TEST DESCRIPTION	SWITCH POS	C	WORK STEPS	MFG LIMITS
P								
				When using the –925 harness select unloaded bus operation.			-925 RTU HARNESS	
					<J>		Select 429 bus	
					<2>		DLP_A/B	
					<U>		Unloaded	
				Transit Label 252, Data D55555 on the XPDR->DLP_A/B bus, High speed with internal module loop-back to the XPDR->DLP_A/B bus receiver enabled.	<A>		Test ARINC 429	
					<H>		High	
					<1>		DLP_A/B bus xmit	
					<13>		Loop-back to DLP_A.B	
					<D5555555>		D5555555	
	26.150	D55555		Verify ARINC 429 data is transmitted on the XPDR->DLP_A/B bus.			On the ARINC test set trap Label 252. The data displayed shall be as specified	D55555
				-923 RTIU HARNESS			-923 RTIU HARNESS	
				When using the –923 RTIU harnesses connect an 800-ohm load from HI and LO input pins to ground.			Apply an 800-ohm resistor between RTIU P1Y5 and ground. Apply an 800-ohm resistor between RTIU P1X5 and ground.	
							-925 RTIU HARNESS	
					<J>		Select 429 bus	
					<2>		DLP_A/B	
					<L>		Loaded	
	26.160	D55555		Verify ARINC 429 data is transmitted on the XPDR->DLP_A/B bus.			On the ARINC test set trap Label 252. The data displayed shall be as specified	D55555
	26.170	8.0 to 12.0 msec (10.0 nominal)		Verify ARINC 429 data transmission rate on the XPDR->TCAS bus.			On the ARINC test set scroll to find transmission speed. The rate displayed shall be as specified	8.0 to 12.0 msec (10.0 nominal)
	26.180	D5555555		Verify ARINC 429 data is transmitted on the TCAS->XPDR bus (internal loop-back).			Observe the RTIU display. The ARINC WORD displayed shall be as specified	D5555555

REV	TEST	SPECIFICATION			PROCEDURE			SPECIFICATION
LTR	NO.	OPR LIMITS	C	TEST DESCRIPTION	SWITCH POS	C	WORK STEPS	MFG LIMITS
P							-923 RTIU HARNESS Remove the 800-ohm resistors from P1Y5 and P1X5.	
				Connect ARINC test set receiver to XPDR->DLP_C/D bus. A2A3P1- XPDR->DLP_C/D_A 30 XPDR->DLP_C/D_B 31			-923 RTIU HARNESS Connect 429 test set receiver input to RTIU pins P1Y4(HI) and P1X4(LO)	
				When using the –925 harness select unloaded bus operation.	<J>		-925 RTU HARNESS Select 429 bus	
					<3>		DLP_C/D	
					<U>		Unloaded	
				Transit Label 252, Data D55555 on the XPDR->DLP_C/D bus, High speed with internal module loop-back to the XPDR->DLP_C/D bus receiver enabled.	<A>		Test ARINC 429	
					<H>		High	
					<3>		DLP_C/D bus xmit	
					<15>		Loop-back to DLP_C/D	
					<D5555555>		D5555555	
	26.190	D55555		Verify ARINC 429 data is transmitted on the XPDR->DLP_C/D bus.			On the ARINC test set trap Label 252. The data displayed shall be as specified	D55555
				-923 RTIU HARNESS When using the –923 RTIU harnesses connect an 800-ohm load from HI and LO input pins to ground.			-923 RTIU HARNESS Apply an 800-ohm resistor between RTIU P1Y4 and ground. Apply an 800-ohm resistor between RTIU P1X4 and ground.	
					<J>		-925 RTIU HARNESS Select 429 bus	
					<3>		DLP_C/D	
					<L>		Loaded	
	26.200	D55555		Verify ARINC 429 data is transmitted on the XPDR->DLP_C/D bus.			On the ARINC test set trap Label 252. The data displayed shall be as specified	D55555

REV	TEST	SPECIFICATION			PROCEDURE			SPECIFICATION
LTR	NO.	OPR LIMITS	C	TEST DESCRIPTION	SWITCH POS	C	WORK STEPS	MFG LIMITS
P								
	26.210	8.0 to 12.0 msec (10.0 nominal)		Verify ARINC 429 data transmission rate on the XPDR->DLP_C/D bus.			On the ARINC test set scroll to find transmission speed. The rate displayed shall be as specified	8.0 to 12.0 msec (10.0 nominal)
	26.220	D5555555		Verify ARINC 429 data is transmitted on the DLP_C/D->XPDR bus (internal loop-back).			Observe the RTIU display. The ARINC WORD displayed shall be as specified	D5555555
							-923 RTIU HARNESS Remove the 800-ohm resistors from P1Y4 and P1X4.	
				Apply ARINC 429 signal to XPDR->RSV1 bus receiver channel and select XPDR->RSV1 receiver test: A2A3P1- XPDR->RSV1_A 50 XPDR->RSV1_B 51			-923 RTIU HARNESS Connect 429 test set receiver input to RTIU pins P1Y3(HI) and P1X3(LO	
				When using the –925 harness select unloaded bus operation.	<J>		-925 RTU HARNESS Select 429 bus	
					<9>		RSV1	
					<U>		Unloaded	
				Transit Label 252, Data D55555 on the XPDR->RSV1 bus, High speed with internal module loop-back to the XPDR->RSV(1/2) bus receiver enabled.	<A>		Test ARINC 429	
					<H>		High	
					<4>		RSV1 bus xmit	
					<16>		Loop-back to RSV1/2	
					<D5555555>		D5555555	
	26.230	D55555		Verify ARINC 429 data is transmitted on the XPDR->RSV1 bus.			On the ARINC test set trap Label 252. The data displayed shall be as specified	D55555
				-923 RTIU HARNESS When using the –923 RTIU harnesses connect an 800-ohm load from HI and LO input pins to ground.			-923 RTIU HARNESS Apply an 800-ohm resistor between RTIU P1Y3 and ground. Apply an 800-ohm resistor between RTIU P1X3 and ground.	

REV	TEST	SPECIFICATION			PROCEDURE			SPECIFICATION
LTR	NO.	OPR LIMITS	C	TEST DESCRIPTION	SWITCH POS	C	WORK STEPS	MFG LIMITS
							-925 RTIU HARNESS	
					<J>		Select 429 bus	
					<9>		RSV1	
					<L>		Loaded	
	26.240	D55555		Verify ARINC 429 data is transmitted on the XPDR->RSV1 bus.			On the ARINC test set trap Label 252. The data displayed shall be as specified	D55555
	26.250	8.0 to 12.0 msec (10.0 nominal)		Verify ARINC 429 data transmission rate on the XPDR-> RSV1 bus.			On the ARINC test set scroll to find transmission speed. The rate displayed shall be as specified	8.0 to 12.0 msec (10.0 nominal)
	26.260	D5555555		Verify ARINC 429 data is transmitted on the RSV1->XPDR bus (internal loop-back).			Observe the RTIU display. The ARINC WORD displayed shall be as specified	D5555555
							-923 RTIU HARNESS Remove the 800-ohm resistors from P1Y3 and P1X3.	
				Apply ARINC 429 signal to XPDR->RSV1 bus receiver channel and select XPDR->RSV2 receiver test:			-923 RTIU HARNESS Connect 429 test set receiver input to RTIU pins P1Y2(HI) and P1X2(LO	
				A2A3P1- XPDR->RSV2_A 38 XPDR->RSV2_B 39				
				When using the –925 harness select unloaded bus operation.			-925 RTU HARNESS	
					<J>		Select 429 bus	
					<10>		RSV2	
					<U>		Unloaded	
T				Transit Label 252, Data D55555 on the XPDR->RSV2 bus, High speed with internal module loop-back to the XPDR->RSV(1/2) bus receiver enabled.	<A>		Test ARINC 429	
					<H>		High	
					<5>		RSV2 bus xmit	
					<16>		Loop-back to RSV1/2	
					<D5555555>		D5555555	
	26.270	D55555		Verify ARINC 429 data is transmitted on the XPDR->RSV2 bus.			On the ARINC test set trap Label 252. The data displayed shall be as specified	D55555

REV	TEST	SPECIFICATION			PROCEDURE			SPECIFICATION
LTR	NO.	OPR LIMITS	C	TEST DESCRIPTION	SWITCH POS	C	WORK STEPS	MFG LIMITS
P								
				-923 RTIU HARNESS			-923 RTIU HARNESS	
				When using the –923 RTIU harnesses connect an 800-ohm load from HI and LO input pins to ground.			Apply an 800-ohm resistor between RTIU P1Y2 and ground. Apply an 800-ohm resistor between RTIU P1X2 and ground.	
							-925 RTIU HARNESS	
					<J>		Select 429 bus	
					<10>		RSV2	
					<L>		Loaded	
	26.280	D55555		Verify ARINC 429 data is transmitted on the XPDR->RSV2 bus.			On the ARINC test set trap Label 252. The data displayed shall be as specified	D55555
	26.290	8.0 to 12.0 msec (10.0 nominal)		Verify ARINC 429 data transmission rate on the XPDR-> RSV2 bus.			On the ARINC test set scroll to find transmission speed. The rate displayed shall be as specified	8.0 to 12.0 msec (10.0 nominal)
	26.300	D5555555		Verify ARINC 429 data is transmitted on the RSV2->XPDR bus (internal loop-back).			Observe the RTIU display. The ARINC WORD displayed shall be as specified	D5555555
							-923 RTIU HARNESS Remove the 800-ohm resistors from P1Y2 and P1X2.	
				Return to RCB Page	<P>		RCB Page	

REV	TEST	SPECIFICATION			PROCEDURE			SPECIFICATION
LTR	NO.	OPR LIMITS	C	TEST DESCRIPTION	SWITCH POS	C	WORK STEPS	MFG LIMITS
AC	27.000			SET TRANSPONDER TYPE	Test Setup #2		SET TRANSPONDER TYPE	
				For –112 or Higher RTIU Software			For –112 or Higher RTIU Software	
AE AE				**For –902, -903, -904, -906, -855, -856, -857, -865, -866, -867, -875 UNITS ONLY**			**For –902, -903, -904, -906, -855, -856, -857, -865, -866, -867, -875 UNITS ONLY**	
				Go to calibration page.	<H>		Main Bench page	
					<K>		Calibration page	
				Program The TRANSPONDER TYPE	<Q>		Transponder Type.	
AE				**-902, -855 -865, -875 UNITS ONLY**			**-902, -855 -865, -875 UNITS ONLY**	
AE AE				For the XS-852A, XS-855, XS-866A, XS-857 select type 0.	<0>		RTIU: Diversity Mode S	
AE				**-903, -856, -866 UNITS ONLY**			**-903, -856, -866 UNITS ONLY**	
AE				For the XS-852B, XS-855B, XS865B select type 1	<1>		Mode S	
AE				**-904, -906, -857, -867 UNITS ONLY**			**-904, -906, -857, -867 UNITS ONLY**	
AE AE				For the XS-852C, XS-852D, XS-855C, XS-856C select type 2	<2>		ATCRBS	
AE AE				**(-902, -903, -904, -906, -855, -856, -857, -865, -866, -867, -875)**			**(-902, -903, -904, -906, -855, -856, -857-865, -866, -867, -875)**	
				Read CAL Data	<B>		Read CAL Data	
				Program the ATCRBS Reply Rate Limit.	<L>		ATCRBS Rate Limit	
AE AE				**-902, -903, -855, -856, -875, -866, -865 UNITS ONLY**			**-902, -903, -855, -856, -875, -866, -865 UNITS ONLY**	

REV	TEST	SPECIFICATION			PROCEDURE			SPECIFICATION
LTR	NO.	OPR LIMITS	C	TEST DESCRIPTION	SWITCH POS	C	WORK STEPS	MFG LIMITS
AE								
AE AE AE AE AE				For the XS-852A, 852B, XS-855, XS-855B, XS-856A, XS-856B, XS-857 set the rate to 650	<650>		650 replies/second.	
AE				**-857, -904, -906, -867 UNITS ONLY**			**-857, -904, -906, -867 UNITS ONLY**	
AE AE				For XS-852C, XS-852D, XS-855C, -856C set the rate to 1300	<1300>		1300 replies/second.	
AE AE AE				**-855, -856, -857, -902, -903, -904, -906, -865, -866, -867, -875 UNITS ONLY**			**-855, -856, -857, -902, -903, -904, -906, -865, -866, -867, -875 UNITS ONLY**	
				Read CAL Data	<B>		Read Cal Data	
				Save transponder type and ATCRBS reply rate limit.	<S>		Save Calibration	
					<Y>		Yes	
					<B>		Read Cal.	
	27.010	Programmed CRC = Actual CRC		Verify that the Calibration Data was save correctly.			Observe the PROGRAMMED & ACTUAL CRC's on the RTIU shall be as same.	Programmed CRC = Actual CRC
					<P>		Main Bench Page	
					<P>		RCB Page	

REV	TEST	SPECIFICATION			PROCEDURE			SPECIFICATION
LTR	NO.	OPR LIMITS	C	TEST DESCRIPTION	SWITCH POS	C	WORK STEPS	MFG LIMITS
P								
	28.000			CLEAR MAINTENANCE LOG AND RAD SOFTWARE PART NO.	Test Setup #1		CLEAR MAINTENANCE LOG AND RAD SOFTWARE PART NO.	
				Clear the AIRCRAFT and TROUBLESHOOT maintenance log and the power-on count.	<H>		Main Bench Page	
					<M>		Clear Main Log/POC	
					<M>		Maint Log	
					<M>		Clear Maint Log/POC	
					<C>		POC	
	28.010	PASS		Verify the Flash Program software version is correct for the module part number and MOD status.	<B>		Observer the RTIU display. The SW VERSION shall match the software version listed in Table 1 of this document for the module part number and MOD status.	PASS
	28.020	PASS		Verify the BOOT (UV) Program software version is correct for the module part number and MOD status.	<B>		Observe the RTIU display. The SW VERSION UV shall match the software version listed in Table 1 of this document for the module part number and MOD status.	PASS
				Go to the Troubleshoot Maintenance Log.	<P>		RCB Page	
					<M>		Maintenance Page	
					<T>		Troubleshoot Log	
	28.030	0		Verify the POC in the maintenance log is set to 0.			Observe the RTIU display. The CUR POC display shall be as specified.	0
	28.040	END LIST		Verify the Troubleshoot maintenance log is cleared.			Observe the RTIU display. The first row in the Description Column display shall read as specified.	END LIST
				Return to the RCB page.	<P>		RCB Page	

REV LTR	TEST NO.	SPECIFICATION OPR LIMITS	C	TEST DESCRIPTION	PROCEDURE SWITCH POS	C	WORK STEPS	SPECIFICATION MFG LIMITS
	29.000			TRANSPONDER ON/OFF DISCRETE AND COLD/WARM START OPERATION	Test Setup #1		TRANSPONDER ON/OFF DISCRETE AND COLD/WARM START OPERATION	
					<N>		Discrete/Analog Page	
AB				Apply a ground to XPDR_OFF(NO) discrete input, wait 5 to 7 seconds and remove ground from the discrete.	<O>		XPDR ON/OFF: OFF Wait 5 to 7 Seconds.	
				XPDR_OFF(NO) PIN: -901, A2A3P1-74 -906, A2A3P1-74 -902: A2A2J4-30 -855: A2A7J3-23 RTIU: P2K6				
					<O>		XPDR ON/OFF: ON	
				Go to the Troubleshoot Maintenance Log page	<P> <M> <T>		RCB Page Maintenance Page Troubleshoot Page	
	29.010	1		Verify the Power-On Count was incremented by 1.			The CUR POC display shall be as specified.	1
				Go to the Discrete Analog Page.	<P> <N>		RCB Page Discrete/Analog Page	
				Apply a ground to XPDR_OFF(NO) discrete input, wait less than 1 second and remove ground from the discrete.	<O>		XPDR ON/OFF: OFF Wait less than 1 second	
				XPDR_OFF(NO) PIN: -901: A2A3P1-74 -902: A2A2J4-30 -855: A2A7J3-23 RTIU: P2K6				
					<O>		XPDR ON/OFF: ON	
				Go to the Troubleshoot Maintenance Log page.	<P> <M> <T>		RCB Page Maintenance Page Troubleshoot Log	

REV	TEST	SPECIFICATION			PROCEDURE			SPECIFICATION
LTR	NO.	OPR LIMITS	C	TEST DESCRIPTION	SWITCH POS	C	WORK STEPS	MFG LIMITS
P								
	29.020	1		Verify the Power-On county was NOT incremented.			The CUR POC display shall be as specified.	1
				Return to RCB Page. Go to the Bench Analog Page. Disable Squitter.	<P> <H> <N> <Q> <D>		RCB Page Main Bench Page Bench Analog Page Squitter Disabled	
				Return to RCB Page	<P> <P>		Main Bench Page RCB Page	
				Set the transponder ATC MODE to ON+A.	<X> <5>		ATC Mode ON+A	

REV	TEST	SPECIFICATION			PROCEDURE			SPECIFICATION
LTR	NO.	OPR LIMITS	C	TEST DESCRIPTION	SWITCH POS	C	WORK STEPS	MFG LIMITS
	30.000			ATCRBS REPLY RATE LIMIT, CODE VERIFICATON, REPLY DELAY AND JITTER	Test Setup #1		ATCRBS REPLY RATE LIMIT, CODE VERIFICATON, REPLY DELAY AND JITTER	
				Interrogate the transponder with ATCRBS MODE A interrogations.			Set the ground station test equipment to ATC (ATCRBS ONLY) mode.	
AB AE AE				-855, -856, -901, -902, -903, -865, -866, -875 Modules only:			-855, -856, -901, -902, -903, -865, -866, -875 Modules only:	
AE AE AE				For XS-852/852A/852B, XS-855, XS-855B, XS-865A, XS-865B, XS-857 modules set PRF to 1000			Set the ground station test equipment PRF: 1000	
AE				**-857, -904, -906, -867 Modules only:**			**-857, -904, -906, -867 Modules only:**	
AA AE				For XS-852C, XS-852D, XS-855C, XS-856C module set PRF to 2000			Set the ground station test equipment PRF/SQTR: 2000	
	30.010	55% TO 75% (65% nominal)		Verify the transponder limits replies to ATCRBS interrogations as specified.			On the ground station test equipment the % reply shall be as specified. NOTE: On IFR equipment the reading is taken from the ATC 1400.	60% to 70% (65% nominal)
				Interrogate the transponder with 600 Mode A interrogations.			Set the ground station test equipment PRF/SQTR: 600	
				Set ATC CODE to 5252	<A> <5252>		ATC CODE 5252	
	30.020	5252		Verify ATC CODE of Mode A reply is as specified.			Observe the ground station test equipment. The ATC CODE displayed shall be as specified.	5252
				Set ATC CODE to 2525	<A> <2525>		ATC CODE 2525	

REV	TEST	SPECIFICATION			PROCEDURE			SPECIFICATION
LTR	NO.	OPR LIMITS	C	TEST DESCRIPTION	SWITCH POS	C	WORK STEPS	MFG LIMITS
AE								
	30.030	2525		Verify ATC CODE of Mode A reply is as specified.			Observe the ground station test equipment. The ATC CODE displayed shall be as specified.	2525
				Set the IDENT of the Mode A reply.	<I>		IDENT	
	30.040	ID appears		Verify the IDENT bit appears in the Mode A reply.			Observe the ground station test equipment. The ATC code shall be as specified.	ID appears
AA AE AE				**For all Units except –855, –856, –857, -865, -866, -867, -875**			**For all Units except –855, –856, –857, -865, -866, -867, -875**	
				Interrogate the transponder with 600 Mode C interrogations/second			Set the ground station test equipment to XPDR MODE: C	
				Set ARINC test set to transmit Altitude of 110,600 feet.			429 test set: TX DATA ED8040	
				Select Main Bench Page. Apply ARINC 429 signal to ADC1->XPDR bus receiver channel.	<H> <J> <4> <L> <P>		Main Bench Page Select 429 BUS (ADC1) LOADED RCB Page	
				Configure transponder module for: ARINC 429 ALT SOURCE	<C> <A> <2>		Configuration Page Altitude Source 429	
				Cycle +28 volt power off.			RTIU: 28 Volt switch OFF	
							Wait a minimum of 7 seconds	
				Cycle +28 volt power on.			RTIU: 28 Volt switch ON	
	30.050	3062		Verify ALT CODE of Mode C reply is as specified			Observe the ground station test equipment. The ATC CODE displayed shall be sas specified.	3062
				Set ARINC test set to transmit Altitude of 4,200 feet.			429 test set: TX DATA 608340	

REV	TEST	SPECIFICATION			PROCEDURE			SPECIFICATION
LTR	NO.	OPR LIMITS	C	TEST DESCRIPTION	SWITCH POS	C	WORK STEPS	MFG LIMITS
AE								
	30.060	4710		Verify ALT CODE of Mode C reply is as specified			Observe the ground station test equipment. The ATC CODE displayed shall be as specified.	4710
				Configure the transponder module for: RSB ALTITUDE SOURCE.	<A> <4>		Altitude Source RSB	
				Cycle +28 volt power off.			RTIU: 28 Volt switch OFF	
							Wait a minimum of 7 seconds	
				Cycle +28 volt power on.			RTIU: 28 Volt switch ON	
				Return to RCB page.	<P>		RCB Page	
				For All Units			**For All Units**	
				Disable Squitter	<H> <N> <Q> <D>		Main Bench Page Bench Analog Page Squitter Disable	
				Return to RCB Page.	<P> <P>		Main Bench Page RCB Page	
	30.070	2.50 to 3.50 uSec (3.10 nominal)		Measure the P3 to F1 ATCRBS reply delay on the BOTTOM receiver channel.			Observe the ground station test equipment. The reply delay shall be as specified.	2.95 to 3.25 uSec (3.10 nominal)
				Set the test equipment to measure jitter on F1 of the ATCRBS reply relative to interrogations.			Oscilloscope: Set oscilloscope to use B-delayed function. Connect Ch1 to XMTR DET of ground station test equipment. Ch2: OFF EXT SYNC: ground station GEN DET jack. A-SWP: 20 uSec B-SWP: 50 nSec B-Delayed mode.	

REV	TEST	SPECIFICATION			PROCEDURE			SPECIFICATION
LTR	NO.	OPR LIMITS	C	TEST DESCRIPTION	SWITCH POS	C	WORK STEPS	MFG LIMITS
	30.080	Less than or equal to 200 nSec		Measure F1 ATCRBS reply jitter (peak to peak variation) on the BOTTOM receiver channel.			Oscilloscope: Set the B-Delay to measure the F1 pulse reply jitter at 50% voltage level of the rising edge of the F1 pulse. The F1 pulse peak reply jitter (maximum reply delay – minimum reply delay) shall be as specified.	Less than or equal to 160 nSec
				Connect UUT TOP antenna to RF I/O port.			On the ground station test equipment connect UUT TOP antenna to RF I/O port.	
T	30.090	2.50 to 3.50 uSec (3.10 nominal)		Measure the P3 to F1 ATCRBS reply delay on the TOP receiver channel.			Observe the ground station test equipment. The reply delay shall be as specified.	2.95 to 3.25 uSec (3.10 nominal)
				Re-connect UUT BOTTOM antenna cable to RF I/O port.			On the ground station test equipment re-connect the UUT BOTTOM antenna to the RF I/O and UUT TOP antenna to the other RF port.	
				Interrogate the transponder with 60 Mode S Interrogations/seconds			Set ground station test equipment PRF/SQTR: 60, MODE S Only.	

REV LTR	TEST NO.	SPECIFICATION OPR LIMITS	C	TEST DESCRIPTION	PROCEDURE SWITCH POS	C	WORK STEPS	SPECIFICATION MFG LIMITS
	31.000			DISCRETE INPUTS/OUTPUTS **-902, -903, -904 MODULES ONLY**	Test Setup #1		DISCRETE INPUTS/OUTPUTS **-902, -903, -904 MODULES ONLY**	
				Select Bench IAC Discrete Display	<H> <N> <A>		Main Bench Page Bench Analog Page IAC Discrete Page	
				Write alternating OPEN(0)/GROUND(1) patterns to the discrete inputs for INPUT PORT. Ports are listed in order from Bit 7 to Bit 0.	<I> <00001000>		Change Input Port 00001000	
				Input Port A2A2J4- RESERVED - RESERVED - XPDR ACTIVE MON - RSV INPUT(NO) 27 ALT SRC SEL2(NO) 2 RESERVED - RESERVED - RESERVED -				
T				Set XPDR ACTIVE(NO) discrete output to OPEN(0) on OUTPUT PORT.	<O> <00000000>		Change Output Port 00000000	
				Output Port A2A2J4 RESERVED - XPDR ACTIVE (NO) 21 RESERVED - RESERVED - RESERVED - RESERVED - RESERVED - RESERVED -				
	31.010	PORT=110		Verify the correct values are read from INPUT PORT.			The XPDR column on the RTIU display for INPUT PORT BITS 5 to 3 shall be as specified. (Bit 5 on the RTIU corresponds to first digit in LIMITS COLUMN).	PORT- 110

REV	TEST	SPECIFICATION			PROCEDURE			SPECIFICATION
LTR	NO.	OPR LIMITS	C	TEST DESCRIPTION	SWITCH POS	C	WORK STEPS	MFG LIMITS
				Reverse OPEN/GROUND pattern written in the previous test.	<I> <00010000>		Change Input Port 00010000	
	31.020	PORT= 101		Verify the correct values are read form INPUT PORT.			The XPDR COLUMN on the RTIU display for INPUT PORT shall be as specified.	PORT= 101
	31.030	XPDR ACTIVE(NO)= 0		Verify XPDR_ACTIVE(NO) discrete is in the correct state.			The RTIU column on the RTIU display for OUTPUT PORT, XPDER ACTIVE(NO) discrete output shall be as specified.	XPDR ACTIVE(NO)= 0
				Set XPDR ACTIVE(NO) discrete output to GROUND(1) on Output Port.	<O> <01000000>		Change Output Port 01000000	
	31.040	XPDR ACTIVE(NO)= 1		Verify XPDR_ACTIVE(NO) discrete is in the correct state.			The RTIU column on the RTIU display for OUTPUT PORT, XPDER ACTIVE(NO) discrete output shall be as specified.	XPDR ACTIVE(NO)= 1
				Select Troubleshoot Maintenance Log	<P> <P> <P> <M> <T>		Bench Analog page Main Bench Page RCB Page Maintenance Page Troubleshoot	
	31.050	END LIST		Verify no errors for the discrete outputs are logged in the Troubleshoot maintenance log.			The first row in the Discript Column display shall be as specified.	END LIST
				Return to RCB Page.	<P>		RCB Page	
AE AE				**-855, -856, -857, -865, -866, -867, -875 MODULE ONLY**			**-855, -856, -857, -865, -866, -867, -875 MODULE ONLY**	
				Select Bench IAC Discrete Display	<H> <N> <A>		Main Bench Page Bench Analog Page IAC Discrete Page	

REV LTR	TEST NO.	SPECIFICATION OPR LIMITS	C	TEST DESCRIPTION	PROCEDURE SWITCH POS	C	WORK STEPS	SPECIFICATION MFG LIMITS
				Write alternating OPEN(0)/GROUND(1) patterns to the discrete inputs for INPUT PORT. Ports are listed in order from Bit 7 to Bit 0. Input Port A2A7J3- RESERVED - RESERVED - XPDR ACTIVE MON - RSV INPUT(NO) - ALT SRC SEL2(NO) 24 RESERVED - RESERVED - RESERVED -	<I> <00010000>		Change Input Port 00010000	
T				Set XPDR ACTIVE(NO) discrete output to OPEN(0) on OUTPUT PORT. Output Port A2A2J4 RESERVED - XPDR ACTIVE (NO) 5 RESERVED - RESERVED - RESERVED - RESERVED - RESERVED - RESERVED -	<O> <00000000>		Change Output Port 00000000	
	31.060	PORT= 111		Verify the correct values are read from INPUT PORT.			The XPDR column on the RTIU display for INPUT PORT BITS 5 to 3 shall be as specified. (Bit 5 on the RTIU corresponds to first digit in LIMITS COLUMN).	PORT= 111
	31.070	XPDR ACTIVE(NO)= 0		Verify XPDR_ACTIVE(NO) discrete is in the correct state.			The RTIU column on the RTIU display for OUTPUT PORT, XPDER ACTIVE(NO) discrete output shall be as specified.	XPDR ACTIVE(NO)= 0

REV	TEST	SPECIFICATION			PROCEDURE			SPECIFICATION
LTR	NO.	OPR LIMITS	C	TEST DESCRIPTION	SWITCH POS	C	WORK STEPS	MFG LIMITS
P								
				Set XPDR ACTIVE(NO) discrete output to GROUND(1) on Output Port.	<O> <01000000>		Change Output Port 01000000	
	31.080	XPDR ACTIVE(NO)= 1		Verify XPDR_ACTIVE(NO) discrete is in the correct state.			The RTIU column on the RTIU display for OUTPUT PORT, XPDER ACTIVE(NO) discrete output shall be as specified.	XPDR ACTIVE(NO)= 1
				Select Troubleshoot Maintenance Log	<P> <P> <P> <M> <T>		Bench Analog page Main Bench Page RCB Page Maintenance Page Troubleshoot	
	31.090	END LIST		Verify no errors for the discrete outputs are logged in the Troubleshoot maintenance log.			The first row in the Discript Column display shall be as specified.	END LIST
				Return to RCB Page.	<P>		RCB Page	

REV LTR	TEST NO.	SPECIFICATION OPR LIMITS	C	TEST DESCRIPTION	PROCEDURE SWITCH POS	C	WORK STEPS	SPECIFICATION MFG LIMITS
	32.000			ARINC 429 BUSSES	Test Setup #2		ARINC 429 BUSSES	
AA AE AE				**-855, ,-856, -857, -902, -903, -904, -865, -866, -867, -875 MODULES ONLY**			**-855, -856, -857, -902, -903, -904, -865, -866, -867, -875 MODULES ONLY**	
				Select Main Bench Page	<H>		Main Bench Page	
				Set ARINC test set to transmit Label 203, Data 555555.			429 test set: TX Speed HIGH, TX Data 555555	
				XPDR RX BUSES			XPDR RX BUSES	
				Apply ARINC 429 signal to TCAS->XPDR bus receiver channel and select TCAS->XPDR receiver test:			Connect 429 test set to RTIU P1G6 (H) and P1H6 (L).	
				FOR –902, -903, -904 ONLY 429 Signal — A2A2J4 TCAS->XPDR_A — 17 TCAS->XPDR_B — 18				
AE AE				FOR –855, –856, –857, -865, -866, -867, -875 MODULE ONLY 429 Signal — A2A2J4 TCAS->XPDR_A — 9 TCAS->XPDR_B — 10				
				Set XPDR to ARINC 429, HIGH SPEED, NO TRANSMIT, TCAS, DATA 00000000	<A> <H> <6> <4> <00000000>		Test ARINC 429 HIGH speed NO Transmit TCAS 00000000	
	32.010	555555C1		Verify ARINC 429 data is received on the TCAS->XPDR bus.			The ARINC WORD display on the RTIU shall be as specified.	555555C1

REV	TEST	SPECIFICATION			PROCEDURE			SPECIFICATION
LTR	NO.	OPR LIMITS	C	TEST DESCRIPTION	SWITCH POS	C	WORK STEPS	MFG LIMITS
AE AE				Apply ARINC 429 signal to DLP A/B ->XPDR bus receiver channel and select DLP A/B ->XPDR receiver test: <u>FOR –902, -903, -904 ONLY</u> 429 Signal — A2A2J4 DLP_A/B-> XPDR_A — 5 DLP_A/B -> XPDR_B — 6 <u>FOR –855, –856, –857, -865, -866, -867, -875 MODULE ONLY</u> 429 Signal — A2A2J4 DLP_A/B-> XPDR_A — 19 DLP_A/B-> XPDR_B — 20			Connect 429 test set to RTIU P1G6 (H) and P1H6 (L).	
				Set XPDR to ARINC 429, HIGH SPEED, NO TRANSMIT, DLP A/B, DATA 00000000	<A> <H> <6> <3> <00000000>		Test ARINC 429 HIGH speed NO Transmit DLP A/B 00000000	
	32.020	555555C1		Verify ARINC 429 data is received on the DLP_A/B->XPDR bus.			The ARINC WORD display on the RTIU shall be as specified.	555555C1

REV	TEST	SPECIFICATION			PROCEDURE			SPECIFICATION
LTR	NO.	OPR LIMITS	C	TEST DESCRIPTION	SWITCH POS	C	WORK STEPS	MFG LIMITS
AE AE				Apply ARINC 429 signal to DLP C/D ->XPDR bus receiver channel and select DLP C/D ->XPDR receiver test: <u>FOR –902, -903, -904 ONLY</u> 429 Signal — A2A2J4 DLP_C/D-> XPDR_A — 9 DLP_C/D -> XPDR_B — 10 <u>FOR –855, –856, –857, -865, -866, -867, -875 MODULE ONLY</u> 429 Signal — A2A2J4 DLP_C/D-> XPDR_A — 13 DLP_C/D-> XPDR_B — 14			Connect 429 test set to RTIU P1G6 (H) and P1H6 (L).	
				Set XPDR to ARINC 429, HIGH SPEED, NO TRANSMIT, DLP C/D, DATA 00000000	<A> <H> <6> <5> <00000000>		Test ARINC 429 HIGH speed NO Transmit DLP C/D 00000000	
	32.030	555555C1		Verify ARINC 429 data is received on the DLP_C/D->XPDR bus. **<u>FOR –902, -903, -904 MODULES ONLY</u>** Set ARINC test set to transmit LOW speed data. Apply ARINC 429 signal to ADC1 ->XPDR bus receiver channel and select ADC1 ->XPDR receiver test: <u>FOR –902, -903, -904 ONLY</u> 429 Signal — A2A2J4 ADC1-> XPDR_A — 11 ADC1 -> XPDR_B — 12			The ARINC WORD display on the RTIU shall be as specified. **<u>FOR –902, -903, -904 MODULES ONLY</u>** <u>429 test set:</u> TX Speed LOW Connect 429 test set to RTIU P1G6 (H) and P1H6 (L).	555555C1

REV	TEST	SPECIFICATION			PROCEDURE			SPECIFICATION
LTR	NO.	OPR LIMITS	C	TEST DESCRIPTION	SWITCH POS	C	WORK STEPS	MFG LIMITS
P								
				Set XPDR to ARINC 429, LOW SPEED, NO TRANSMIT, ADC1, DATA 00000000	<A> <L> <6> <1> <00000000>		Test ARINC 429 LOW speed NO Transmit ADC1 00000000	
	32.040	555555C1		Verify ARINC 429 data is received on the ADC1->XPDR bus. Apply ARINC 429 signal to ADC2 ->XPDR bus receiver channel and select ADC2 ->XPDR receiver test: FOR –902, -903, -904 ONLY 429 Signal — A2A2J4 ADC2-> XPDR_A — 13 ADC2 -> XPDR_B — 14			The ARINC WORD display on the RTIU shall be as specified. Connect 429 test set to RTIU P1G6 (H) and P1H6 (L).	555555C1
				Set XPDR to ARINC 429, LOW SPEED, NO TRANSMIT, ADC2, DATA 00000000	<A> <L> <6> <9> <00000000>		Test ARINC 429 LOW speed NO Transmit ADC2 00000000	
	32.050	555555C1		Verify ARINC 429 data is received on the ADC2->XPDR bus. XPDR TX BUSES			The ARINC WORD display on the RTIU shall be as specified. XPDR TX BUSES	555555C1

REV	TEST	SPECIFICATION			PROCEDURE			SPECIFICATION
LTR	NO.	OPR LIMITS	C	TEST DESCRIPTION	SWITCH POS	C	WORK STEPS	MFG LIMITS
AE				Connect ARINC test set receiver to XPDR->TCAS bus. FOR –902, -903, -904 ONLY 429 Signal — A2A2J4 XPDR-> TCAS_A — 15 XPDR -> TCAS_B — 16 FOR –855, –856, –857, -865, -866, -867, -875 ONLY 429 Signal — A2A2J4 XPDR-> TCAS_A — 11 XPDR -> TCAS_B — 12			Connect 429 test set to RTIU P1Y6 (H) and P1X6 (L).	
				Set 429-test receiver to receiver Label 252.			On the 429 tester set to RX position, LABEL 252	
				Set XPDR to transmit Label 252, Data D55555 on the XPDR->TCAS bus, High speed with internal module loop-back to the TCAS-> XPDR bus receiver enabled.	<A> <H> <2> <14> <D5555555>		Test ARINC 429 HIGH (speed) TCAS Bus Xmit Loop-back to TCAS D5555555	
	32.060	D55555		Verify ARINC 429 data is transmitted on the XPDR->TCAS bus.			On the 429 tester trap LABEL 252. The data for this label shall be as specified.	D55555
				Apply an 800-ohm load on each bus output to ground.			Apply an 800-ohm resistor between RTIU pin P1Y6 and ground. Apply an 800-ohm resistor between RTIU pin P1X6 and ground.	
	32.070	D55555		Verify ARINCE 429 is transmitted on the XPDR->TCAS bus with a maximum load applied.			On the 429 test set trap label 252. The data shall be as specified.	D55555
	32.080	8.0 to 12.0 mSec (10.0 nominal)		Verify ARINC 429 data transmission rate on the XPDR->TCAS bus.			On the 429 test set the transmission RATE function. The reading shall be as specified.	8.0 to 12.0 mSec (10.0 nominal)

REV	TEST	SPECIFICATION			PROCEDURE			SPECIFICATION
LTR	NO.	OPR LIMITS	C	TEST DESCRIPTION	SWITCH POS	C	WORK STEPS	MFG LIMITS
	32.090	D5555555		Verify ARIC 429 data is received on the TCAS->XPDR bus (internal loop-back).			The ARINC WORD display on the RTIU shall be as specified. Remove the 800 resistors from RTIU P1Y6 and P1X6.	D5555555
				Connect ARINC test set receiver to XPDR-> DLP_A/B bus. FOR –902, -903, -904 ONLY 429 Signal A2A2J4 XPDR-> DLP_A/B 3 XPDR -> DLP_A/B 4 FOR –855, –856, –857, -865, -866, -867, -875 ONLY 429 Signal A2A2J4 XPDR-> DLP_A/B 21 XPDR -> DLP_A/B 22			Connect 429 test set to RTIU P1Y5 (H) and P1X5 (L).	
AE AE				Set XPDR to transmit Label 252, Data D55555 on the XPDR->DLP_A/B bus, High speed with internal module loop-back to the DLP_A/B-> XPDR bus receiver enabled.	<A> <H> <1> <13> <D5555555>		Test ARINC 429 HIGH (speed) DLP_A/B Bus Xmit Loop-back to DLP_A/B D5555555	
	32.100	D55555		Verify ARINC 429 data is transmitted on the XPDR->DLP_A/B bus. Apply an 800-ohm load on each bus output to ground.			On the 429 test set trap label 252. The data shall be as specified. Apply an 800-ohm resistor between RTIU pin P1Y5 and ground. Apply an 800-ohm resistor between RTIU pin P1X5 and ground.	D55555
R	32.110	D55555		Verify ARINCE 429 is transmitted on the XPDR->DLP_A/B bus with a maximum load applied.			On the 429 test set trap label 252. The data shall be as specified.	D55555

REV LTR	TEST NO.	SPECIFICATION OPR LIMITS	C	TEST DESCRIPTION	PROCEDURE SWITCH POS	C	WORK STEPS	SPECIFICATION MFG LIMITS
R	32.120	8.0 to 12.0 mSec (10.0 nominal)		Verify ARINC 429 data transmission rate on the XPDR->DLP_A/B bus.			On the 429 test set the transmission RATE function. The reading shall be as specified.	8.0 to 12.0 mSec (10.0 nominal)
R	32.130	D5555555		Verify ARIC 429 data is received on the DLP_A/B->XPDR bus (internal loop-back).			The ARINC WORD display on the RTIU shall be as specified.	D5555555
							Remove the 800 resistors from RTIU P1Y5 and P1X5.	
				Connect ARINC test set receiver to XPDR-> DLP_C/D bus.			Connect 429 test set to RTIU P1Y4 (H) and P1X4 (L).	
				<u>FOR –902, -903, -904 ONLY</u>				
				429 Signal — A2A2J4 XPDR-> DLP_C/D — 7 XPDR -> DLP_C/D — 8				
AE AE				<u>FOR –855, –856, –857, -865, -866, -867, -875 ONLY</u>				
				429 Signal — A2A2J4 XPDR-> DLP_C/D — 17 XPDR -> DLP_C/D — 18				
				Set XPDR to transmit Label 252, Data D55555 on the XPDR->DLP_C/D bus, High speed with internal module loop-back to the DLP_C/D> XPDR bus receiver enabled.	<A> <H> <3> <15> <D5555555>		Test ARINC 429 HIGH (speed) DLP_C/D Bus Xmit Loop-back to DLP_C/D D5555555	
R	32.140	D55555		Verify ARINC 429 data is transmitted on the XPDR->DLP_A/B bus.			On the 429 test set trap label 252. The data shall be as specified.	D55555
				Apply an 800-ohm load on each bus output to ground.			Apply an 800-ohm resistor between RTIU pin P1Y4 and ground. Apply an 800-ohm resistor between RTIU pin P1X4 and ground.	

REV	TEST	SPECIFICATION			PROCEDURE			SPECIFICATION
LTR	NO.	OPR LIMITS	C	TEST DESCRIPTION	SWITCH POS	C	WORK STEPS	MFG LIMITS
P								
	32.150	D55555		Verify ARINCE 429 is transmitted on the XPDR->DLP_C/D bus with a maximum load applied.			On the 429 test set trap label 252. The data shall be as specified.	D55555
	32.160	8.0 to 12.0 mSec (10.0 nominal)		Verify ARINC 429 data transmission rate on the XPDR->DLP_C/D bus.			On the 429 test set the transmission RATE function. The reading shall be as specified.	8.0 to 12.0 mSec (10.0 nominal)
	32.170	D5555555		Verify ARIC 429 data is received on the DLP_C/D->XPDR bus (internal loop-back).			The ARINC WORD display on the RTIU shall be as specified.	D5555555
							Remove the 800 resistors from RTIU P1Y4and P1X4.	
					<P>		RCB Page	

REV	TEST	SPECIFICATION			PROCEDURE			SPECIFICATION
LTR	NO.	OPR LIMITS	C	TEST DESCRIPTION	SWITCH POS	C	WORK STEPS	MFG LIMITS
	33.000			ATCRBS/MODE S TRANSPONDER OPERATION Remove +28 V power from the module. Wait 7 seconds minimum Reapply +28 V power to the module	Test Setup #2		ATCRBS/MODE S TRANSPONDER OPERATION On the RTIU turn the 28 V switch OFF. Wait 7 seconds On the RTIU turn the 28 V switch ON.	
AB AE				**-855, -856, -901, –902, -903, -865, -866, -875 MODULES ONLY**			**-855, -856, -901, –902, -903, -865, -866, -875 MODULES ONLY**	
	33.010	Greater than or equal to 99%		Verify transponder replies to MODE S interrogations			On the transponder ground station test equipment observe the MODE S replies. The reply percentage shall be as specified. NOTE: On IFR test equipment the reading are taken on the S1403.	Greater than or equal to 99%
AE				**-857, -904, -906, -867 MODULES ONLY**			**-857, -904, -906, -867 MODULES ONLY**	
	33.020	Equal to 0%		Verify transponder replies to MODE S interrogations			On the transponder ground station test equipment observe the MODE S replies. The reply percentage shall be as specified. NOTE: On IFR test equipment the reading are taken on the S1403.	Equal to 0%
AB AE				**-855, -856, -901, –902, -903, -865, -866, -875 MODULES ONLY** Interrogate the transponder with ATCRBS Only Mode A All Call interrogations.			**-855, -856, -901, –902, -903, -865, -866, -875 MODULES ONLY** Ground station test equipment set ACS (ATCRBS Only All Call), PRF/SQTR: 600, XPDR MODE: Mode A	

REV	TEST	SPECIFICATION			PROCEDURE			SPECIFICATION
LTR	NO.	OPR LIMITS	C	TEST DESCRIPTION	SWITCH POS	C	WORK STEPS	MFG LIMITS
	33.030	Equal to 0%		Verify transponder replies to ATCRBS interrogations			Ground station test equipment observe the ATCRBS replies. The reply percentage shall be as specified. NOTE: On IFR test equipment the reading are taken on the S1403.	Equal to 0%
AE				**-857, -904, -906, -867 MODULES ONLY** Interrogate the transponder with ATCRBS Only Mode A All Call interrogations.			**-857, -904, -906 , -867 MODULES ONLY** Ground station test equipment set ACS (ATCRBS Only All Call), PRF/SQTR: 600, XPDR MODE: Mode A	
	33.040	Greater than or equal to 99%		Verify transponder replies to ATCRBS interrogations			Ground station test equipment observe the ATCRBS replies. The reply percentage shall be as specified. NOTE: On IFR test equipment the reading are taken on the S1403.	Greater than or equal to 99%
AB AE				**-855, -856, -901, –902, -903, -865, -866, -875 MODULES ONLY** Interrogate the transponder with ATCRBS Only Mode S All Call interrogations.			**-855, -856, -901, –902, -903, -865, -866, -875 MODULES ONLY** On the ground station test equipment set ACL (ATCRBS MODE S Only All Call), PRF/SQTR: 60, XPDR MODE: Mode C	
	33.050	Greater than or equal to 99%		Verify transponder replies to ATCRBS Mode C/Mode S All Call interrogations			On the transponder ground station test equipment observe the Mode S replies. The reply percentage shall be as specified. NOTE: On IFR test equipment the reading are taken on the S1403.	Greater than or equal to 99%
AE T				**-857, -904, -906 ,-867 MODULES ONLY** Interrogate the transponder with ATCRBS Only Mode S All Call interrogations.			**-857, -904, -906, -867 MODULES ONLY** On the ground station test equipment set ACL (ATCRBS MODE S Only All Call), PRF/SQTR: 60, XPDR MODE: Mode C	

REV	TEST	SPECIFICATION			PROCEDURE			SPECIFICATION
LTR	NO.	OPR LIMITS	C	TEST DESCRIPTION	SWITCH POS	C	WORK STEPS	MFG LIMITS
P	33.060	Greater than or equal to 99%		Verify transponder replies to ATCRBS Mode C/Mode S All Call interrogations			On the ground station test equipment observe the ATCRBS replies. The reply percentage shall be as specified. NOTE: On IFR test equipment the reading are taken on the S1403. Set the ground station test equipment to MODE S Only MODE.	Greater than or equal to 99%

REV	TEST	SPECIFICATION			PROCEDURE			SPECIFICATION
LTR	NO.	OPR LIMITS	C	TEST DESCRIPTION	SWITCH POS	C	WORK STEPS	MFG LIMITS
P								
	34.000			CLEAR MAINTENANCE	Test Setup #2		CLEAR MAINTENANCE	
AF				For All Units Clear maintenance logs (AIRCRAFT and TROUBLESHOOT) and Power On Count.	<H> <M> <M> <M> <C> <P>		For All Units Main Bench Page Clear Maint. LOG/POC Maint. LOG Clear Maint. LOG/POC POC RCB Page	
				Turn UUT 28-volt power off.			On the RTIU turn the 28 V switch OFF.	
				Wait 7 seconds.			Wait 7 seconds.	
				Turn UUT 28 volt power on.			On the RTIU turn the 28 V switch ON.	
				Activate PAST self-test mode.	<S> <A>		Test (PAST/POST) PAST	
	34.010	ATC PASS		Verify self-test passes with no errors.			On the RTIU the RADIO MSGS display shall be as specified.	ATC PASS
				Return to NORMAL mode.	<S>		TEST (PAST/POST)	
				Go to the TROUBLESHOOT Maintenance log.	<M> <T>		Maintenance Page Troubleshoot Log	
	34.020	1		Verify the POC in the maintenance log is set to 1.			On the RTIU the CUR POC display shall be as specified.	1
	34.030	END LIST		Verify the TROUBLESHOOT maintenance log is cleared.			On the RTIU the DESCRIPT COLUMN display shall be as specified.	END LIST
				Go to the Aircraft Maintenance Log.	<P> <M> <A>		RCB Page Maintenance Page Aircraft Log	
	34.040	END LIST		Verify the AIRCRAFT maintenance log is cleared.			Observe the RTIU DISCRIPT COLUMN. The display shall be as specified.	END LIST
				END OF TESTING	<P>		RCB Page RTIU 28 V switch OFF. REMOVE UUT from test set.	

APPENDIX A
RF SIGNAL SPECIFICATIONS

APPENDIX A
RF SIGNAL SPECIFICATIONS

1. ATCRBS INTERROGATIONS

Pulse Designator	Pulse Duration	Duration Tolerance	Rise Time Min/Max	Decay Time Min/Max
P1, P2, P3, P5	0.8	±0.1	0.05/0.1	0.05/0.2
P4 (short)	0.8	±0.1	0.05/0.1	0.05/0.2
P4 (long)	1.6	±0.1	0.05/0.1	0.05/0.2

Interrogation Type	Spacing			
	P1 - P2	P1 - P3	P3 - P4	P4
ATCRBS Mode A	2 ±0.15	8 ±0.2	-	None
ATCRBS Mode C	2 ±0.15	21 ±0.2	-	None
ATCRBS Mode A/Mode S All-Call	2 ±0.15	8 ±0.2	2 ±0.05	Long
ATCRBS Mode C/Mode S All-Call	2 ±0.15	21 ±0.2	2 ±0.05	Long
ATCRBS Mode A-Only All-Call	2 ±0.15	8 ±0.2	2 ±0.05	Short
ATCRBS Mode C-Only All-Call	2 ±0.15	21 ±0.2	2 ±0.05	Short

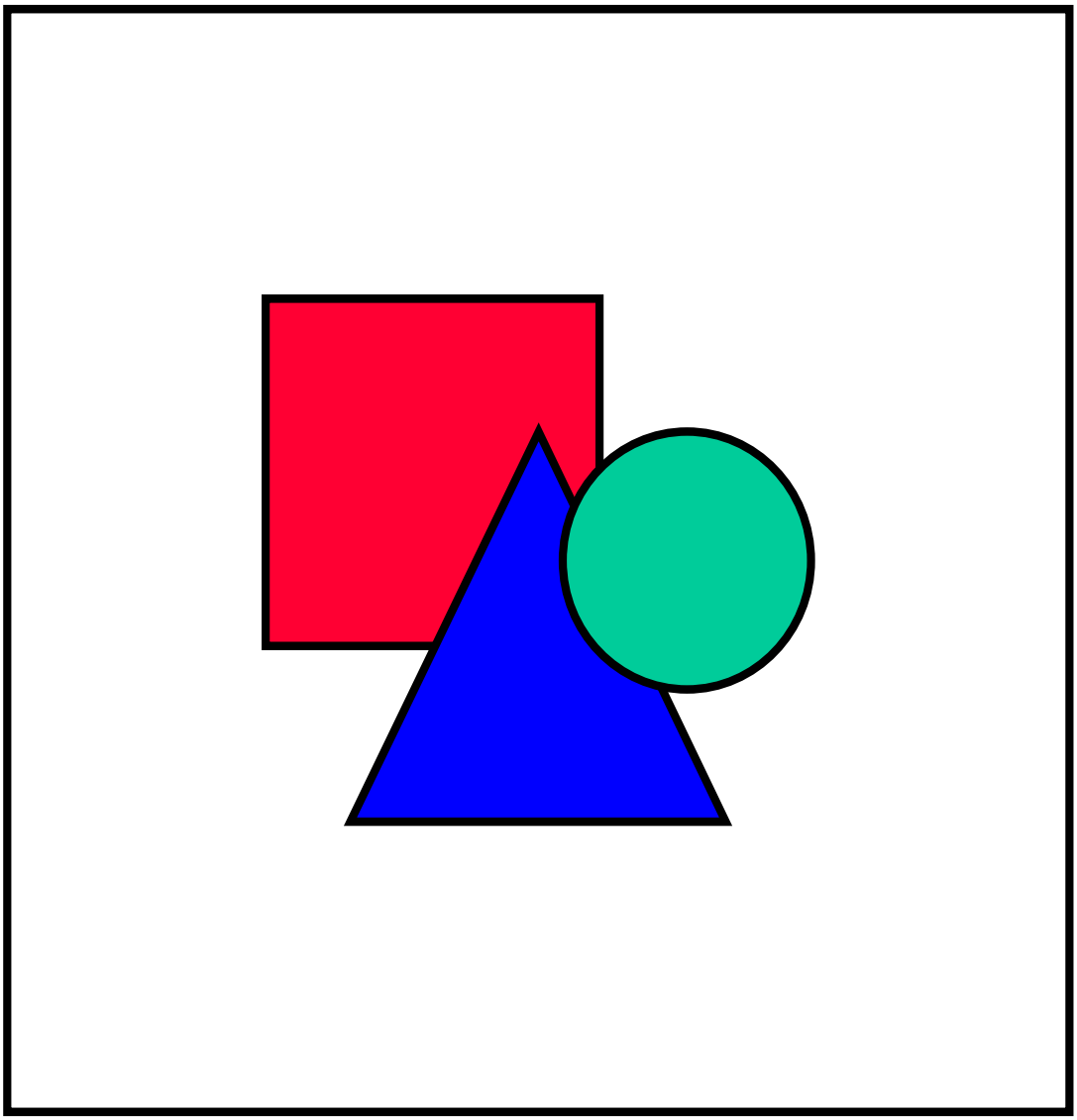

Figure A-1

2. MODE S INTERROGATIONS

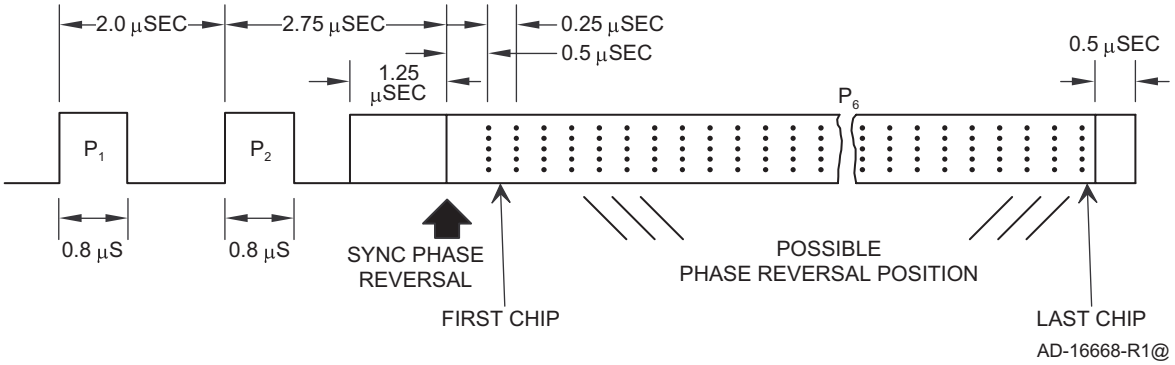

Figure A-2

3. MODE S REPLIES

The reply data block is formed by PPM encoding of the reply data. A pulse transmitted in the first half of the interval represents a ONE while a pulse transmitted in the second half represents a ZERO.

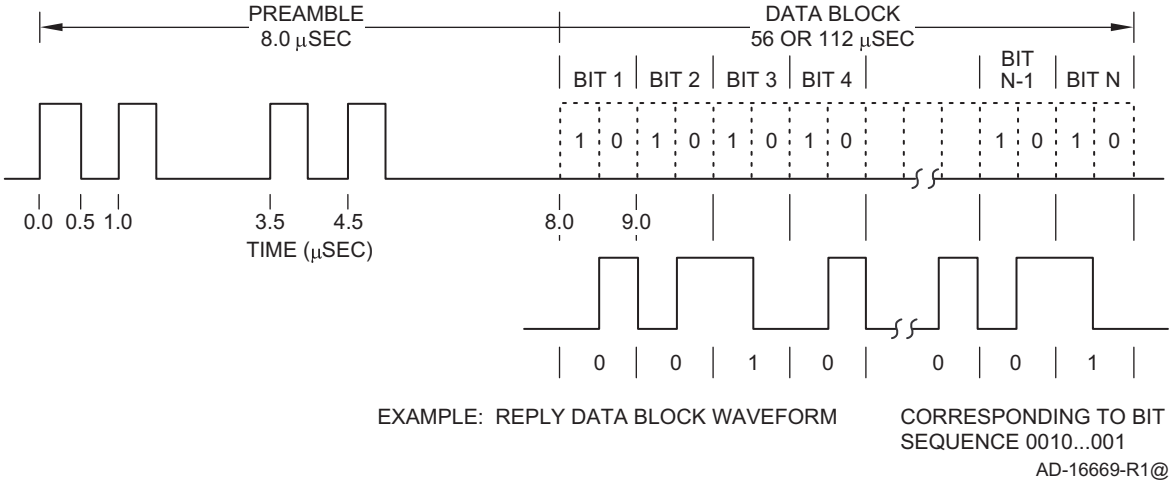

Figure A-3

REV LTR

P

APPENDIX B
FINAL TEST REPORT

REV LTR: P

QUALITY CONTROL FUNCTIONAL TEST REPORT

PART NO. 7517400 | **SERIAL**

TEST FIXTURES AND SUPPORT EQUIPMENT

	TEST FIXTURE OR TYPE	SERIAL	MODEL	SPC/ID	REV	CAL DUE DATE
AF	MOD S AUXILARY UNIT, IFR MODE - S1403					
AF	TRANSPONDER TEST SET, IFR ATC - 1400A					
	OSCILLOSCOPE					
	DIG VOLTMETER					
	RTIU					
	RTIU SOFT					
	ARINC TEST SET					

P/N 7517400 ( )	REV.	C.O.	DATE
IT NO. 7517400	REV.	C.O.	DATE
APPROVED			

AF **NOTE:** The JcAir SDX2000 may be substituted for the IFR equipment

TESTER	DATE	FTR SHEET 1 OF 6

REV LTR

QUALITY CONTROL FUNCTIONAL TEST REPORT

V

PART NO. 7517400 **SERIAL NO.**

1.000 **RECEIVE INPUT CURRENT**

AF	1.010	CURRENT		AMPS

2.000 **RS-232 PROGRAMMING INTERFACE**

AF	2.010			INVALID INPUT!!

3.000 **DELETED**

4.000 **DELETED**

5.000 **SELF TEST**

AF	5.010	Mode S Interrogations		%REPLY
	5.020	POST		ATC PASS

AF	6.000	**POWER SUPPLY LOW/HIGH LINE VOLTAGE TEST**		
AF	6.010	RCB ERRORS		NO ERRORS
	6.020	+60VDC MONITOR		VDC
	6.030	+60 VDC MONITOR		VDC

7.000 **MONITOR TEST**

	7.010	+28 VDC		VDC
	7.020	+60 VDC		VDC
	7.030	+50 VDC		VDC
	7.040	+28.0 VDC		VDC
	7.050	+15 VDC		VDC
	7.060	-5 VDC		VDC
	7.070	-15 VDC		VDC
	7.080	-150 VDC		VDC
V	7.090	TEMPERATURE		DEG C
V	7.100	WARM/COLD DET		VDC
V	7.110	XMTR TOP PIN		VDC
V	7.120	XMTR BOT PIN		VDC
V	7.130	TOP FWD PWR		VDC
V	7.140	BOT FWD PWR		VDC
V	7.150	XMTR DUTY CYCLE		VDC
V	7.160	XMTR ENV MON		VDC
V	7.170	SELF-TEST MON		VDC
	7.180	BOOST CURRENT		VDC

7.190	PULSE +40V MON		VDC
7.200	PULSE MOD MON		VDC
7.210	SYNTH LOCK DET		VDC
7.220	INIT PWR SUPPLY		VDC
7.230	LOCAL OSC LEVEL		VDC
7.240	LOCAL OSC VCO		VDC

8.000 **TX FREQ & OUTPUT POWER**

8.010	TX FREQUENCY		MHz
8.020	TX POWER P1 BOT ANT		WATTS
8.030	TX POWER S115 PULSE		WATTS
8.040	TX PULSE DROOP BOT ANT		dB
8.050	TX POWER P1 TOP ANT		WATTS
8.060	TX POWER S115 TOP ANT		WATTS
8.070	TX PULSE DROOP TOP ANT		dB

9.000 **TX REPLY P/W, RISE & FALL TIMES**

9.010	RISE TIME		nSec
9.020	PULSE WIDTH		nSec
9.030	FALL TIME		nSec
9.040	RISE TIME		nSec
9.050	PULSE WIDTH		nSec
9.060	FALL TIME		nSec

10.000 **DELETED**

11.000 **MODE S CODE VERIFICATION, REPLY DELAY AND JITTER**

11.010	UF=5 INTERROGATIONS		DATA
11.020	MB		DATA
11.030	ID		DATA
11.040	ADDRESS		DATA
11.050	BOT ANT SPR DELAY		uSec
11.060	FIRST PREAMBLE JITTER		nSec
11.070	TOP ANT SPR DELAY		uSec
11.080	BOT ANT P4 REPLY DELAY		uSec
11.090	BOT ANT PREAMBLE JITTER		nSec
11.100	TOP ANT PREAMBLE JITTER		uSec

TESTER **DATE** **FTR SHEET 2 OF 6**

REV LTR

QUALITY CONTROL FUNCTIONAL TEST REPORT

V

PART NO. 7517400 **SERIAL NO.**

12.000 **RECEIVER MTL, DYNAMIC RANGE & LOW LEVEL REPLY RATIO**

		BOT ANT MODE A			
AF	12.010	MTL (ATCRBS)	–		dB
	12.020	DYNAMIC RANGE			%
	12.030	LOW LEVEL REPLY			%
		BOT ANT MODE S			
V	12.040	MTL (MODE S)	–		dBm
	12.050	DYNAMIC RANGE			%
		TOP ANT ATCRBS			
V	12.060	MTL (ATCRBS)	–		dBm
	12.070	DYNAMIC RANGE			%
	12.080	LOW LEVEL REPLY			%
		TOP ANT MODE S			
V	12.090	MTL (MODE S)	–		dBm
	12.100	DYNAMIC RANGE			%

13.000 **RECEIVER BANDWIDTH**

		BOT ANT		
	13.010	1005 RESPONSE		%
	13.020	60 dB response		MHz
	13.030	1055 RESPONSE		%
	13.040	60 dB response		MHz
		TOP ANT		
	13.050	1005 RESPONSE		%
	13.060	60 dB response		MHZ
	13.070	1055 RESPONSE		%
	13.080	60 dB response		MHz

14.000 **MODE S & ATCRBS SIDE LODE SUPPRESSION (SLS)**

		BOT ANT			
	14.010	P2=P1			%
	14.020	P2=P1-9			%
V	14.030	MTL +3	–		dB
AF	14.040	SLS (RF LEV = -24)	–		dB
AF		**TOP ANT**			
AF	14.050	P2=P1			%
	14.060	P2=P1-9			%
AF	14.070	MTL +3	–		dB
AF	14.080	SLS (RF LEV = -24)	–		dB

		BOT ANT		
	14.090	P5 +3 = P6		%
	14.100	P5 –12 = P6		dB

15.000 **P4 PULSE LEVEL, ATCRBS/MODE-S & ATCRBS-ONLY ALL CALL**

	BOT ANT		
15.010	P4 = P3 – 1		%
15.020	P4 = P3 – 6		%
15.030	MTL +3		dB
15.040	MODE A ALL CALL		dB
15.050	MODE C ALL CALL		%
	TOP ANT		
15.060	P4 = P3 – 1		%
15.070	P4 = P3 – 6		%
15.080	MTL +3		%
15.090	MODE A ALL CALL		dB
15.100	MODE C ALL CALL		dB

16.000 **P4 PULSE POSITION**

	BOT ANT		
16.010	P3/P4 = 1.7 uSec		%
16.020	P3/P4 = 1.95 uSec		%
16.030	P3/P4 = 2.05 uSec		%
16.040	P3/P4 = 2.30 uSec		%
	TOP ANT		
16.050	P3/P4 = 1.7 uSec		%
16.060	P3/P4 = 1.95 uSec		%
16.070	P3/P4 = 2.05 uSec		%
16.080	P3/P4 = 2.30 uSec		%

17.000 **P4 PULSE WIDTH**

	BOT ANT		
17.010	P4 =- 0.40		%
17.020	P4 = - 0.10		%
17.030	P4 = +0.10		%
17.040	P4 = + 0.9		%
	TOP ANT		
17.050	P4 =- 0.40		%
17.060	P4 = - 0.10		%

TESTER **DATE** **FTR SHEET 3 OF 6**

REV LTR

QUALITY CONTROL FUNCTIONAL TEST REPORT

V

PART NO. 7517400 **SERIAL NO.**

AF	17.070	P4 = +0.10		%
AF	17.080	P4 = + 0.90		%

18.000 **P1/P3 PULSE WIDTH**

	BOT ANT		
18.010			%
18.020			%
18.030			%
	TOP ANT		
18.040			%
18.050			%
18.060			%

AF 19.000 **MODE S SYNC PHASE REVERSAL(SPR) POSITION**

	BOT ANT		
19.010			%
19.020			%
19.030			%
19.040			%
	TOP ANT		
19.050			%
19.060			%
19.070			%
19.080			%

20.000 **DIVERSITY OPERATION**

	BOT ANT		
20.010			%
20.020			%
20.030			%
20.040			%
	TOP ANT		
20.050			%
20.060			%
20.070			%
20.080			%

21.000 **MUTUAL SUPPRESSION**

21.010			VDC
21.020			uSec
21.030			%
21.040			%

22.000 **DISCRETE INPUTS**

22.010			PORT 0
22.020			PORT 1
22.030			PORT 0
22.040			PORT 1
22.050			PORT 2
22.060			PORT 3
22.070			PORT 2
22.080			PORT 3

23.000 **DISCRETE OUTPUTS**

23.010			PORT 0
23.02			VDC
23.03			PORT 1
23.04			PORT 0
23.05			VDC
23.06			PORT 1
23.07			PORT 4
23.08			END LIST

24.000 **FAN STRAP INTERFACES**

24.010			VDC
24.020			VDC
24.030			OFF
24.040			ON
24.050			VDC
24.060			PASS
24.070			NO ERR

25.000 **SIDETONE DISTORTION**

25.010			WORD
25.020			WORD
25.030			WORD
25.040			WORD
25.050			WORD
25.060			WORD
25.070			WORD
25.080			WORD
25.090			WORD
25.100			WORD
25.110			WORD
25.120			WORD

TESTER **DATE** **FTR SHEET 4 OF 6**

REV LTR V

QUALITY CONTROL FUNCTIONAL TEST REPORT

PART NO. 7517400 | **SERIAL NO.**

26.000 **ARINC 429 BUSSES**

26.010			WORD
26.020			WORD
26.030			WORD
26.040			WORD
26.050			WORD
26.060			WORD
26.070			WORD
26.080			WORD
26.090			WORD
26.100			WORD
26.110			WORD
26.120			WORD
26.130			mSec
26.140			WORD
26.150			WORD
26.160			WORD
26.170			mSec
26.180			WORD
26.190			WORD
26.200			WORD
26.210			mSec
26.220			WORD
26.230			WORD
26.240			WORD
26.250			mSec
26.260			WORD
26.270			WORD
26.280			WORD
26.290			mSec
26.300			WORD

27.0 **SET TRANSPONDER TYPE**

27.01			CRCS

28.00 **CLEAR MAINTENANCE LOF AND RAD SOFTWARE PART NO.**

28.010			FLASH
28.020			BOOT
28.030			POC
28.040			END LIST

29.000 **TRANSPONDER ON/OFF DISCRETE AND COLD/WARM START OPERATION**

29.010			POC
29.020			POC

30.000 **ATCRBS REPLY RATE LIMIT CODE VERIFICATION REPLY DELAY AND JITTER**

30.010			%
30.020			CODE
30.030			CODE
30.040			ID
30.050			CODE
30.060			CODE
30.070			uSec
30.080			nSec
30.090			uSec

31.000 **DISCRETE INPUTS/OUTPUTS**

31.010			PORT
31.020			PORT
31.030			ACTIVE
31.040			ACTIVE
31.050			END LIST
31.060			PORT
31.070			ACTIVE
31.080			ACTIVE
31.090			END LIST

TESTER | **DATE** | **FTR SHEET 5 OF 6**

REV LTR V

QUALITY CONTROL FUNCTIONAL TEST REPORT

PART NO. 7517400 | **SERIAL NO.**

32.000 **ARINC 429 BUSSES**

32.010			WORD
32.020			WORD
32.030			WORD
32.040			WORD
32.050			WORD
32.060			WORD
32.070			WORD
32.080			mSec
32.090			WORD
32.100			WORD
32.110			WORD
32.120			mSec
32.130			WORD
32.140			WORD
32.150			WORD
32.160			mSec
32.170			WORD

33.000 **ATCRBS/MODE S TRANSPONDER OPERATION**

33.010			%
33.020			%
33.030			%
33.040			%
33.050			%
33.060			%

34.000 **CLEAR MAINTENANCE LOG**

34.010			MSGS
34.020			POC
34.030			END LIST
34.040			END LIST

TESTER | **DATE** | **FTR SHEET 6 OF 6**

REV LTR

P

APPENDIX C
MODULE CALIBRATION PROCEDURE

REV LTR

APPENDIX C
MODULE CALIBRATION PROCEDURE

1. INTRODUCTION

The XS-852 Diversity Transponder module uses computer (electronic) adjustments for most of the circuitry which requires calibration. Computer adjustments are preferable to mechanical adjustments (potentiometers, variable capacitors and inductors) because they can be performed automatically by a computer remotely (without the unit opened up), and are inherently more reliable.

With the exception of several variable capacitors on the Transmitter CCA, all adjustments are performed from the BENCH mode on the RTIU. Calibration constants for parameters are stored in EEPROM memory on the PROCESSOR CCA. The parameters in EEPROM have an error detection means, so that a loss of data will be detected by the computer. A loss of calibration data could result in invalid transponder operation.

2. CALIBRATION PROCEDURE

The following calibration procedure MUST be performed in the following order to insure consistent results from the calibration. If calibration procedure is not completed (SAVE CALIBRATION command executed) prior to removing power from the module, the calibration data will not be transferred to EEPROM, and will be lost. Calibration data may be saved permanently at any point in the procedure by executing the SAVE CALIBRATION command.

2.1 Calibration Test Setup

The following test setup is required prior to performing the calibration procedure:

ATC 1400A
Per TEST SETUP #1 in Section 7.1

S1403
Per TEST SETUP #1 in Section 7.1

RTIU SETUP
Per TEST SETUP #2 in Section 7.2 (RCB PAGE).
<H> MAIN BENCH PAGE
<K> CALIBRATION PAGE

NOTE: Squitter must be disabled in accordance with test setup #2 to correctly calibrate unit.

2.2 Initialize Calibration with Default Data

This step puts in default calibration data in SYSTEM RAM. Some DEFAULT parameter settings which are initialized by this command are not altered in later steps.

RTIU
<C> SET CAL TO DEFAULT
AD <B> READ CAL DATA
AD <S> SAVE
AD <Y> YES

REV LTR P

2.3 Initialize MTL Temperature Compensation

MTL temperature compensation must be correctly set before TOP/BOTTOM MTL AUTOCAL is performed.

RTIU
<M> MTL TEMP COMP
<-40> (NOTE: number is -0.04 dB/Degree Centigrade)
<B> READ CAL DATA

2.4 Top/Bottom MTL Autocal

The CABLE LOSS number used in this setup is the loss in dB at 1030MHz for the RF cable which connects the ATC 1400A to the Diversity Transponder module. The RF Level on the ATC 1400A must be increased from the MTL setting by the amount of the loss.

S1403
C MENU: 1
FUNC: 1 ATC (ATCRBS Only)

ATC 1400A
PRF/SQTR: 500
XPDR MODE: A
RF LEVEL: -76dBm + CABLE LOSS(a positive number in dB)
Connect RF CABLE to TOP antenna jack on XS-852

RTIU
<A> AUTOCAL MTL
<T> TOP
WAIT UNTIL AUTOCAL MTL STATUS INDICATES PASS.

NOTE: If the AUTOCAL MTL STATUS indicates FAIL, the module is not correctly calibrated. This indicates a test equipment problem or module failure had prevented the calibration from completing.

ATC 1400A
Connect RF CABLE to BOTTOM antenna jack on XS-852

RTIU
<A> AUTOCAL MTL
<B> BOTTOM
WAIT UNTIL AUTOCAL MTL STATUS INDICATES PASS.
<B> READ CAL DATA

2.5 ATCRBS Reply Delay

ATC 1400A
RF LEVEL: -67dBm

Repeat the following procedure until the RpDly: display on the S1403 reads an AVERAGE value of 3.10 micro-seconds.:

RTIU
<F> SET REPLY DELAYS
<1> ATCRBS
<NEW #> (Change the existing ATCRBS REPLY DELAY depending on the value of the RpDly display on the S1403)
<B> READ CAL DATA

NOTE: The RpDly: is increased by INCREASING the ATCRBS REPLY DELAY number, and is decreased by DECREASING the number. Changing the ATCRBS REPLY DELAY by 1 changes the delay by 42 nsec.

2.6 ALLCALL Reply Delay

ATC 1400A
PRF/SQTR: 60

S1403
C MENU: 1
FUNC: 4 ACL (ATCRBS/Mode S All-Call)

Repeat the following procedure until the RpDly: display on the S1403 reads an AVERAGE value of 127.925 micro-seconds:

RTIU
<F> SET REPLY DELAYS
<2> ALLCALL
<NEW #> (Change the existing ALLCALL REPLY DELAY depending on the value of the RpDly display on the S1403)
<B> READ CAL DATA

NOTE: The RpDly: is increased by INCREASING the ALLCALL REPLY DELAY number, and is decreased by DECREASING the number. Changing the ALLCALL REPLY DELAY by 1 changes the delay by 42 nsec.

2.7 SPR Delay

S1403
C MENU: 1
FUNC: 2 SEQ (Mode S Only)
SPR Dv: ± 0.05 AND ± 0.20

Repeat the following procedure until the %Reply:S on the S1403 is 0% when SPR Dv is -0.20 and +0.20, and is 100% when SPR Dv is -0.05 and +0.05:

S1403
SPR Dv: -0.20 Check %Reply:S
SPR Dv: -0.05 Check %Reply:S
SPR Dv: +0.05 Check %Reply:S
SPR Dv: +0.20 Check %Reply:S

RTIU
<G> SPR DELAY
<NEW #> (Change the existing SPR DELAY depending on the results of the %Reply:S on the S1403)
<B> READ CAL DATA

NOTE: The position of the SPR window relative to the start of the P6 pulse is increased by DECREASING the SPR DELAY number, and is decreased by INCREASING the number. Changing the SPR DELAY by 1 changes the position by 42 nsec.

At the end of the procedure, reset the S1403 to the following condition:

S1403
C MENU: 1
SPR Dv: CAL

2.8 DPSK Reply Delay

Repeat the following procedure until the RpDly: display on the S1403 reads an AVERAGE value of 127.925 micro-seconds:

RTIU
<F> SET REPLY DELAYS
<3> MODE S
<NEW #> (Change the existing MODE S REPLY DELAY depending on the value of the RpDly display on the S1403)
<B> READ CAL DATA

NOTE: The RpDly: is increased by INCREASING the MODE S REPLY DELAY number, and is decreased by DECREASING the number. Changing the MODE S REPLY DELAY by 1 changes the delay by 42 nsec.

2.9 XMTR Pulse Width

S1403
Connect the oscilloscope to S1403 XMTR Detector.

Connect the Transponder RF Cable to the S1043 RF Connector.

C MENU: 1
ANT B: ON

Repeat the following procedure until the pulse width of the 1st pulse of the Mode S reply (50% to 50% voltage point) is set to between 460 nsec and 510 nsec:

RTIU
<T> XMTR PULSE WIDTH
<NEW #> (Change the existing XMTR PULSE WIDTH depending on the width of the first pulse on the oscilloscope)

<B> READ CAL DATA

REV LTR P

NOTE: The pulse width is increased by INCREASING the XMTR PULSE WIDTH number and decreased by DECREASING the number. Changing the XMTR PULSE WIDTH by 1 changes the pulse width by 42 nsec.

2.10 DELETED

2.11 DELETED

2.12 Save Calibration Data

This MUST be executed prior to removing power from the system to save the CALIBRATION DATA permanently in EEPROM.

RTIU
<S> SAVE CALIBRATION

<Y> YES

NOTE: SAVE CAL STATUS must indicate PASS or else calibration data was not correctly saved. A FAIL or no response may indicate a module failure.

3. CALIBRATION PARAMETER DEFINITION

The XS-852 contains the following parameters which allow adjustment of circuitry in the module. For each parameter, a DEFAULT setting is listed, which is the nominal value the parameter is set to by an INITIALIZE EEPROM command. NOTE: The DEFAULT settings apply to MOD B or later modules, MOD A or earlier modules may contain different default settings.

3.1 Top LOGAMP Gain / Bottom LOGAMP Gain

PARAMETER RANGE: 0 to 1

DEFAULT SETTING: 0

This parameter allows the slope of the Log amplifier on the RECEIVER CCA to be adjusted. The TOP and BOTTOM receiver channels have separate adjustments. A 0 is defined as LOW gain setting, and a 1 is defined as a HIGH gain setting.

3.2 MTL TEMP COMP

PARAMETER RANGE: -50 to +50

DEFAULT SETTING: -40

This parameter allows for a linear compensation of the Minimum Transmit Level (MTL) based on the temperature of the module. The computer uses this parameter and the temperature sensor to change the MTL setting of the receiver to compensate for the variations in the receiver hardware over temperature. The amount of MTL compensation in dB at a given module temperature (MTL CHANGE) is given by the following formula:

MTL CHANGE = (TEMP -25) * PARAMETER * 0.001

The TEMP variable in the formula is the internal temperature sensor in Degrees Centigrade. The compensation is centered around 25 degrees centigrade (room temperature) since most alignment and bench testing is performed at this temperature. As the temperature moves away from room temperature, (hot or cold), the amount of compensation increases. A PARAMETER setting of 0 eliminates all temperature compensation.

3.3 ATCRBS Rate Limit

PARAMETER RANGE: 0 to 204

DEFAULT SETTING: 65 (650 replies/second)

This parameter adjusts the ATCRBS reply rate limit. This function limits the number of ATCRBS interrogations the transponder will reply to per second. The reply limit has the following definition:

ATCRBS LIMIT = PARAMETER * 10

3.4 Top Receiver MTL / Bottom Receiver MTL

PARAMETER RANGE: 0 to 255

DEFAULT SETTING: 255

This parameter sets the Minimum Transmit Level (MTL) for both the TOP and BOTTOM receiver channels. The MTL parameter is converted to a voltage by a digital to analog converter on the PROCESSOR CCA, which changes the sensitivity of the receiver. The TOP and BOTTOM receivers have separate MTL channel adjustments. The digital to analog voltage conversion is given by the following formula:

RECEIVER MTL VOLTAGE = (PARAMETER / 256) * 10.0 Volts

A setting of 0 gives the receiver the lowest MTL (in dBm), and a setting of 255 gives the receiver the highest MTL. The DEFAULT setting for this parameter is not typical, but is set to aid the initial calibration process.

3.5 ATCRBS Reply Delay

PARAMETER RANGE: 0 to 63

DEFAULT SETTING: 11

The ATCRBS REPLY DELAY parameter sets the delay between the P3 pulse of an ATCRBS Mode A/Mode C interrogation and the F1 pulse of the ATCRBS reply. The parameter is used to program a register in the RF ASIC on the PROCESSOR CCA which sets this delay. The delay has the following definition:

ATCRBS DELAY = (PARAMETER * 0.04167) + 2.513 usec

The ATCRBS DELAY in the above definition is the reply delay AT THE PINS of the RF ASIC (BVIDEO or TVIDEO inputs, Pin 11 or 12, to PULSEMOD output, Pin 81). The delay number does not include delays through the Receiver IF or Transmitter/Modulator.

3.6 ALLCALL Reply Delay

PARAMETER RANGE: 0 to 255

DEFAULT SETTING: 154

The ALLCALL REPLY DELAY parameter sets the delay between the P4 pulse of an ATCRBS Mode A/Mode S or ATCRBS Mode C/Mode S all-call interrogation and the first FRAMING pulse of the Mode S reply. The parameter is used to program a register in the RF ASIC on the PROCESSOR CCA which sets this delay. The delay has the following definition:

ALLCALL DELAY = (PARAMETER * 0.04167) + 121.429 usec

The ALLCALL DELAY in the above definition is the reply delay AT THE PINS of the RF ASIC (BVIDEO or TVIDEO inputs, Pin 11 or 12, to PULSEMOD output, Pin 81). The delay number does not include delays through the Receiver IF or Transmitter/Modulator.

3.7 Mode S Reply Delay

PARAMETER RANGE: 0 to 255

DEFAULT SETTING: 191

The MODE S REPLY DELAY parameter sets the delay between the SYNC PHASE REVERSAL (SPR) pulse of a Mode S interrogation and the first FRAMING pulse of the Mode S reply. The parameter is used to program a register in the RF ASIC on the PROCESSOR CCA which sets this delay. The delay has the following definition:

MODE S DELAY = (PARAMETER * 0.04167) + 119.555 usec

The MODE S DELAY in the above definition is the reply delay AT THE PINS of the RF ASIC (DPSKDATA input, Pin 17, to PULSEMOD output, Pin 81). The delay number does not include delays through the Receiver IF or Transmitter/Modulator.

3.8 DPSK Window Select

PARAMETER RANGE: 0 to 15

DEFAULT SETTING: 6

The DPSK WINDOW SELECT parameter sets the width of the window in which the RF ASIC on the PROCESSOR CCA looks for a SYNC PHASE REVERSAL (SPR) pulse in a Mode S interrogation (DPSKDATA input, Pin 17). This parameter in conjunction with the SPR DELAY parameter is used to determine if a valid SPR has been received in a Mode S interrogation. For a Mode S interrogation to be valid, a SPR pulse must be detected within a window of time from the leading edge of the P6 pulse of the interrogation. The SPR DELAY sets the time from the leading edge of the P6 to the start of the window where the RF ASIC starts to look for the SPR pulse, and the DPSK WINDOW SELECT sets the width of the window. The window width has the following definition:

DPSK WINDOW = PARAMETER * 0.04167 usec

3.9 SPR Delay

PARAMETER RANGE: 0 to 63

DEFAULT SETTING: 36

The SPR DELAY parameter sets the time between when the RF ASIC detects a P6 pulse of a Mode S interrogation, and when it starts looking for a SYNC PHASE REVERSAL (SPR) pulse on the DPSK input. The SPR DELAY had the following definition:

SPR DELAY = 3.00 - (PARAMETER * 0.04167) usec

The SPR DELAY is measured as the time between the start of the P6 pulse on BVIDEO or TVIDEO inputs, pins 11 or 12, and the SPR pulse on DPSKDATA input, Pin 17 of the RF ASIC.

3.10 XMTR PULSE WIDTH

PARAMETER RANGE: 0 to 15

DEFAULT SETTING: 12

The XMTR PULSE WIDTH parameter sets the width of the pulses which are output for ATCRBS or Mode S replies. This allows for variations in Transmitter and Modulator hardware to be adjusted out. The XMTR PULSE WIDTH has the following definition:

XMTR PULSE WIDTH = 0.7083 - (PARAMETER * 0.04167) usec

The XMTR PULSE WIDTH is the pulse width of the PULSEMOD output (Pin 81) on the RF ASIC on the PROCESSOR CCA. The width in the formula is for a narrow (0.5 usec) Mode S reply pulse. A wide (1.0usec) Mode S reply pulse is XMTR PULSE WIDTH + 0.5 usec. An ATCRBS reply pulse is XMTR PULSE WIDTH - 0.08334 usec.

3.11 TRANSPONDER TYPE

PARAMETER RANGE: 0 to 2

DEFAULT SETTING: 0

The TRANSPONDER TYPE parameter configures the transponder as one of the following types:

TYPE	DESCRIPTION
0	Diversity Mode S with Data Link and TCAS operation.
1	Mode S with Data Link and without TCAS operation.
2	ATCRBS Transponder operation.

The software reads the parameter and operates accordingly. For TYPE=1, the software will disallow replies on the TOP antenna, and operation with a TCAS system. For TYPE=2, the software will disallow replies to Mode S Interrogations, and will generate ATCRBS replies to ATCRBS-Only All Call Interrogations, and ATCRBS/Mode S All Call Interrogations.

4. RTIU CALIBRATION COMMAND OPERATION

The RTIU's BENCH CALIBRATION DISPLAY displays existing calibration parameters, and allows for entering new calibration parameters. The following paragraphs list different features of the commands and displays.

4.1 Calibration Operation Description

The CALIBRATION parameters which are used for module alignment are contained in 2 different places on the PROCESSOR CCA, the SYSTEM RAM and the EEPROM memory. The calibration constants contained in EEPROM is non-volatile, and the constants are retained when power is removed from the system. When power is applied to the system, a copy of the constants is transferred to SYSTEM RAM. The constants which are in SYSTEM RAM are volatile, and are lost when power is removed from the system.

Calibration data which is displayed on the BENCH CALIBRATION DISPLAY on the RTIU displays the calibration data which is contained in the SYSTEM RAM. All commands on this RTIU page which modify calibration data modify the copy in SYSTEM RAM with two exceptions. The INITIALIZE EEPROM and SAVE CALIBRATION commands modify the calibration data in EEPROM. Calibration data in SYSTEM RAM which is modified by BENCH commands is not automatically saved in the EEPROM, and changes will be lost after power is removed from the system. The SAVE CALIBRATION command must be issued after changes are made to calibration data before the EEPROM data will be updated.

4.2 READ CAL DATA Command

The READ CAL DATA command displays on the RTIU display the current calibration data settings which are in the SYSTEM RAM. The command does not affect the calibration data in either SYSTEM RAM or EEPROM.

4.3 SET CAL TO DEFAULT

The SET CAL TO DEFAULT command may be used if calibration data is lost due to replacing an EEPROM or some other failure which would destroy calibration data. The command initializes the copy of calibration data in SYSTEM RAM to default (nominal) numbers which are average numbers for most systems. If this command is used, the system MUST be re-calibrated using the calibration procedure in this section.

4.4 INITIALIZE EEPROM

The INITIALIZE EEPROM command may be used to initialize an EEPROM similar to the SET CAL TO DEFAULT command. This command differs from the SET CAL TO DEFAULT command in two ways:

- The command updates the EEPROM directly, and does not require using the SAVE CALIBRATION command to physically write to the EEPROM.
- ALL data contained in EEPROM is initialized, including the maintenance logs, power-on counts, and system times.

If this command is used, the system MUST be re-calibrated using the calibration procedure in this section.

4.5 SAVE CALIBRATION

The SAVE CALIBRATION commands transfers the calibration data which is contained in the SYSTEM RAM copy to EEPROM, where is becomes permanent. This command must be issued after changing calibration constants if they are to be saved permanently.

4.6 RESTORE CAL DATA

The RESTORE CAL DATA command transfers the calibration data which is in the EEPROM to the copy in SYSTEM RAM. The command has the same effect as turning the power to the module off and then on.

4.7 Manual Calibration Commands

The following commands are calibration commands that allow manual entry of calibration data:

RECEIVER MTL
DPSK WINDOW SEL
XMTR PULSE WIDTH
SET REPLY DELAYS
SPR DELAY
ATCRBS RATE LIMIT
MTL TEMP COMP
LOGAMP GAIN
TRANSPONDER TYPE

When the command is selected, a prompt is given for entry of a parameter, which is an integer number within the range specified. The parameter is then entered into the calibration data copy in SYSTEM RAM. The RTIU display is not automatically updated after the new data is entered, the READ CAL DATA command must be issued to display the new values.

4.8 AUTOCAL MTL Command

The AUTOCAL MTL command allows for automatic calibration of the receiver MTL. This command differs from the RECEIVER MTL command in that it performs an automatic calibration of the MTL. The command requires that the RF test set generates the following signal:

500 ATCRBS Mode A Interrogations/second

RF Level @ Transponder RF connector is -77dBm.

The TOP and BOTTOM receivers each require separate calibrations.

4.9 Calibration Parameter Display

Calibration data is primarily displayed on the RTIU BENCH CALIBRATION DISPLAY as the integer parameters which are entered by commands. Some parameters are additionally displayed as either voltages or time per the conversions listed in section 3.0 of this appendix.

The PROGRAMMED CRC and ACTUAL CRC is used to detect calibration data which has been corrupted. The PROGRAMMED CRC is the Cyclical Redundancy Check (CRC) calculation of the calibration data, and it is contained in EEPROM as a parameter. The PROGRAMMED CRC is written at the time the calibration data in EEPROM was saved. The ACTUAL CRC is calculated each time power is applied to the system. If data has been corrupted in EEPROM, the PROGRAMMED CRC and ACTUAL CRC will not match.

APPENDIX D
SOFTWARE PROGRAMMING PROCEDURE

APPENDIX D
SOFTWARE PROGRAMMING PROCEDURE

1. INTRODUCTION

The XS-852 Diversity Transponder has the ability to update the software from the RTIU without disassembling the module or unsoldering EPROMS. In order to accomplish this, the module contains two programs, a BOOT PROGRAM, and a FLASH PROGRAM.

The BOOT PROGRAM is contained in normal EPROM memory, and it's primary function is to update the transponder software which is contained in the FLASH EPROM memory from the RTIU. The BOOT PROGRAM is only operational when FLASH programming mode is selected from a switch on the RTIU harness.

The FLASH EPROM memory contains all transponder operational code which is executed in normal operational modes. The FLASH EPROM may be reprogrammed from the RTIU using the PC which is connected to the RTIU. The FLASH EPROM software may be put on a floppy disk, or a hard disk on the PC, and transferred to the FLASH EPROM in programming operation mode.

2. FLASH PROGRAMMING PROCEDURE

The following procedure should be followed in order to remotely program the FLASH EPROM in the module. The FLASH EPROM program is physically contained in two FLASH EPROM devices, an EVEN device and an ODD device. The two devices are differentiated by the following part number:

EVEN DEVICE: 7517419-1XX

ODD DEVICE: 7517419-2XX

Although the procedure is written for programming both EVEN and ODD FLASH EPROM devices, it is also possible to independently erase and program either device.

2.1 Program File Setup

The program for each FLASH EPROM device (EVEN, ODD) is contained in a seperate file on the PC, and each device is erased and programmed independently. The files may reside on either a floppy disk or hard disk drive on the PC. The file names which are entered from the RTIU prompt must also contain the drive name, path name and extension for the files. In order to make the programming process more efficient, the file extension should be named after the 3 digit dash number for the FLASH EPROM device which it programs. An example of a file name which is entered at the RTIU prompt would be (the string after the FILENAME prompt):

ENTER EVEN FILENAME C:\FLASH.103

ENTER ODD FILENAME C:\FLASH.203

In the above example, the files are located on a root directory of a hard disk ("C:\"), the EVEN file name is "FLASH.103", and the ODD file name is "FLASH.203".

NOTE: Both EVEN and ODD FLASH PROGRAM files will not fit on a single 360K floppy drive. If a higher density drive is not available, it is desirable to copy the files to a hard disk to make the programming process easier.

2.2 Program Test Setup

RTIU
Per TEST SETUP #2 in Section 7.2 (RCB PAGE)
<H> MAIN BENCH PAGE
<F> PROGRAM PAGE

2.3 Set Module To Programming Mode

Turn RTIU +28 V switch OFF
Set PROG/NORM switch on RTIU harness to PROG
Turn RTIU +28 V switch ON
<T> TRANSMIT DATA

2.4 Erase Even and Odd Flash EPROMS

<E0> (Erase EVEN FLASH device)
Wait 10 seconds until PASS is displayed.
<E1> (Erase ODD FLASH device)
Wait 10 seconds until PASS is displayed.
<ESC> (Press <ESC> key to go to MENU mode)

NOTE: If the status returned after the E0 or E1 command is FAIL, or if no status is returned, the FLASH devices have not erased correctly. This may indicate a module hardware failure.

2.5 Program Even and Odd Flash EPROMS

<X> PROGRAM FLASH ROM
<B> BOTH
MAX RECORDS PER PACKET <16>
ENTER EVEN FILE NAME <Even Path/filename>
ENTER ODD FILE NAME <Odd Path/filename>
Wait 12 to 15 minutes until PROGRAM COMPLETE is displayed on PC.

NOTE: If PROGRAM ABORTED is displayed on the RTIU screen, or PROGRAM COMPLETE is never displayed, this indicates the programming operation did not complete normally. The problem could be an error in the file on the PC, an RTIU problem, or a hardware problem with the transponder. The reason for the problem is listed next to the PROGRAM ABORTED message.

2.6 Verify Programming Operation

<T> TRANSMIT DATA
<F> (FLASH program data verification command)

The following message should be displayed:
P-CSUM = xxxx C-CSUM = xxxx
P-CRC = yyyy C-CRC= yyyy

Verify the 4 digit hexidecimal number for the P-CSUM equals the number for the C-CSUM, and the P-CRC number equals the C-CRC number. If these numbers do not match, the FLASH EPROM is not programmed correctly.

<ESC> (Press <ESC> key to go to MENU mode)

2.7 Exit Programming Mode

Turn RTIU +28 V switch OFF
Set PROG/NORM switch on RTIU harness to NORM

3. BOOT PROGRAM COMMANDS

The BOOT program is selected by setting the PROG/NORM switch on the RTIU harness to the PROG position, and applying or cycling the +28 V power. The commands listed in this section may be executed from the RTIU from the "TRANSMIT MODE" (<T> command). Some of the commands in this section are not used for programming operation, but can be used for troubleshooting or debugging.

In the command descriptions listed below, the KEY SEQUENCE defines the valid keystrokes for the commands. A "<CR>" specifies the RETURN key must be pressed after the key sequence. Parameter required for commands are listed with the KEY SEQUENCE. The RTIU DISPLAY shows what the expected result of the command is.

3.1 Flash Memory CRC/CHECKSUM

This test computes a 16-bit CRC and 16-bit CHECKSUM for the FLASH EPROM devices, and displays this computed result along with the CRC and CHECKSUM which was programmed into the devices at the time of programming. If FLASH EPROM data is corrupted, the PROGRAMMED CRC/CHECKSUM will not match the COMPUTED CRC/CHECKSUM. The CRC and CHECKSUM are different methods of detecting data errors in the devices.

KEY SEQUENCE
F<CR>

RTIU DISPLAY
P-CSUM= <Programmed checksum> C-CSUM= <Computed checksum>
P-CRC= <Programmed CRC> C-CRC= <Computed CRC>

Where:

<Programmed checksum>	Field contains 4 hexadecimal digits which is the checksum programmed into memory at the time of programming.
<Computed checksum>	Field contains 4 hexadecimal digits which is the checksum which was computed by the test.
<Programmed CRC>	Field contains 4 hexadecimal digits which is the CRC programmed into memory at the time of programming.
<Computed CRC>	Field contains 4 hexadecimal digits which is the CRC which was computed by the test.

3.2 Boot Memory CRC/CHECKSUM

This test computes a 16-bit CRC and 16-bit CHECKSUM for the BOOT EPROM devices, and displays this computed result along with the CRC and CHECKSUM which was programmed into the devices at the time of programming. If BOOT EPROM data is corrupted, the PROGRAMMED CRC/CHECKSUM will not match the COMPUTED CRC/CHECKSUM.

KEY SEQUENCE
B<CR>

RTIU DISPLAY
P-CSUM= <Programmed checksum> C-CSUM= <Computed checksum>

P-CRC= <Programmed CRC> C-CRC= <Computed CRC>

Where:

<Programmed checksum>	Field contains 4 hexadecimal digits which is the checksum programmed into memory at the time of programming.
<Computed checksum>	Field contains 4 hexadecimal digits which is the checksum which was computed by the test.
<Programmed CRC>	Field contains 4 hexadecimal digits which is the CRC programmed into memory at the time of programming.
<Computed CRC>	Field contains 4 hexadecimal digits which is the CRC which was computed by the test.

3.3 MEMORY Read

This test will read 8 words from MEMORY address space in the microprocessor. If the memory Address specified is ODD, it will read 16 bytes from the MEMORY address space in the microprocessor. The command is similar to the READ MEMORY command in the RTIU BENCH mode.

KEY SEQUENCE
R <Address><CR>

RTIU DISPLAY
<Word #1> <Word #2> .. <Word #8>

Where:

<Address>	Field contains up to 5 hexadecimal digits with the starting address of the memory to be read.
<Word #x>	Field contains 4 hexadecimal digits with the words from memory.

3.4 MEMORY Write

This test will write 1 BYTE or WORD to memory address space, and read the data word back to verify it was written correctly. If the address is an odd address, the command will write the word as two bytes to memory. If the address range specifies FLASH EPROM memory it will write 1 byte to the appropriate device and read the data back after it programs it.

WARNING: THIS COMMAND CAN ALTER THE CONTENTS OF FLASH EPROM MEMORY

KEY SEQUENCE
W <Address> <Byte/Word> <CR>

RTIU DISPLAY
<Word>

Where:

<Address>	Field contains 5 hexadecimal digits with the address to be written.
<Byte/Word>	Field contains 4 hexadecimal digits for a word and 2 hexadecimal digits for a byte.

3.5 FLASH EPROM Erase

This test performs an erase operation to the FLASH EPROM to initialize the device. The erase operation leaves all memory locations as "FF", which is the "unprogrammed" state of an EPROM. The erase operation consists of first programming all bytes of the EPROM to "00", and then initiating an erase operation which sets all bytes to "FF". Errors may occur either during the operation of programming bytes to "00" or erasing the device (setting bytes to "FF"). If no failures occur during the programming or erase operation, the "PASS" status will be output. If either the programming or erase operation fails, an "FAIL" message is output which describes the test failure.

WARNING: THIS COMMAND CAN ALTER THE CONTENTS OF FLASH EPROM MEMORY

KEY SEQUENCE
E <Device #> <CR>

RTIU DISPLAY
FAIL <Address> <Program Byte> <Error Byte>
- OR -
PASS

Where:

<Device #>	0 for EVEN FLASH device, 1 for ODD FLASH device.
<Address>	5 digit hex address where program/erase error occurred.
<Program Byte>	2 digit hex byte which is the data which is being programmed. The byte is "00" during programming operation and "FF" during erase operation.
<Error Byte>	2 digit hex byte which is the actual data which is read back at the address where the error occurred.

3.6 EEPROM Pattern Test

The test performs a read/write test to EEPROM memory. The test first reads the EEPROM memory and checks it's contents against the "Verify Byte" which is specified as a parameter in the command. If the data in the EEPROM does match the "Verify Byte", the address and contents of the first memory location where the data did not match is displayed on the RTIU

screen. The test also writes the "Write Byte" data byte to all locations in the EEPROM memory after verifying the memory. Note that a FAIL message does not necessarily mean the EEPROM is bad, it may mean the data in the EEPROM has not been initialized by this command.

WARNING: CALIBRATION CONSTANTS AND MAINTANENCE LOG INFORMATION STORED IN THE EEPROM WILL BE ERASED BY THIS COMMAND.

KEY SEQUENCE

N <Verify Byte> <Write Byte>

Where:

<Verify Byte>	Byte which is compared to all locations in EEPROM.
<Write Byte>	New byte to be written to all locations in EEPROM.

RTIU DISPLAY

FAIL <address> <error byte>

- OR -

PASS

Where:

<address>	5 digit hex address of first location in EEPROM which did not match the <Verify Byte> data.
<error byte>	2 digit hex byte which is the contents of the location.

APPENDIX E
ERROR CODE DEFINITION

APPENDIX E
ERROR CODE DEFINITION

1. INTRODUCTION

The XS-852 Diversity Transponder has extensive self-test and performance monitor capability. Each error which is logged in a maintenance log is one of four different types or categories of errors (FAIL ERRORS, INSTALL ERRORS, TROUBLESHOOT ERRORS and BENCH TEST ERRORS). The module contains two separate maintenance logs (AIRCRAFT and TROUBLESHOOT) which have different functions. The error definitions here apply to transponders with MOD B or later software.

2. ERROR TYPES

Errors which are logged in a maintenance log fall into one of four categories. The categories are FAIL ERRORS, INSTALL ERRORS, TROUBLESHOOT ERRORS and BENCH TEST ERRORS. The following paragraphs describe the characteristics of the different error types.

2.1 FAIL ERRORS

FAIL ERRORS are errors which occur during normal system operation on the bench or in the aircraft, and are generally a result of an internal failure in the transponder. FAIL ERRORS will cause the module to fail PAST or POST self-test modes. In addition, these errors will cause the "ATC ERR" annunciation on an RMU. FAIL ERRORS are logged in both the AIRCRAFT and TROUBLESHOOT maintenance logs.

2.2 INSTALL ERRORS

INSTALL ERRORS are errors which occur during normal system operation on the bench or in the aircraft, and are errors which are generally a result of a problem outside the transponder, such as an installation problem or a failure in a unit which interfaces to the transponder. These errors are primarily designed to help maintenance personnel troubleshoot system problems, however an internal module failure could cause the errors to occur. INSTALL ERRORS will NOT cause the module to fail PAST or POST self-test modes. Only the "INVALID MODE S ADDRESS" error will cause the "ATC ERR" annunciation on an RMU.

INSTALL ERRORS are only permanently logged in the AIRCRAFT and TROUBLESHOOT maintenance logs when the transponder SQUAT SWITCH inputs are set to the "IN AIR" condition. If the transponder is "ON GROUND", then the error will be displayed in the AIRCRAFT maintenance log, but will be erased when power is removed from the system.

2.3 TROUBLESHOOT ERRORS

TROUBLESHOOT ERRORS are errors which occur during normal system operation on the bench or in the aircraft, and are errors which are designed for aiding in troubleshooting module problems or failures in the transponder. TROUBLESHOOT ERRORS will NOT cause the module to fail PAST or POST self-test, and will NOT cause the "ATC ERR" annunciation on the RMU. FAIL ERRORS are ONLY logged in the TROUBLESHOOT maintenance log, and are not accessible from an RMU.

2.4 BENCH TEST ERRORS

BENCH TEST ERRORS are errors which are logged as a result of the BENCH TEST or BURN-IN TEST modes. These operational modes only may be accessed on the bench from an RTIU, and do not occur in normal aircraft installations. The errors are designed for aiding in troubleshooting module problems. BENCH TEST ERRORS are only logged in the TROUBLESHOOT maintenance log. Some errors which occur in BENCH TEST or BURN-IN TEST modes are the same error codes which occur during PAST/POST modes, but the limits where failures occur may be different between BENCH and PAST/POST modes.

3. MAINTENANCE LOG STRUCTURE

The XS-852 Diversity Transponder contains two separate maintenance logs, an AIRCRAFT LOG, and a TROUBLESHOOT LOG. Each log can hold up to 32 error codes, and both may be accessed from the RTIU.

3.1 AIRCRAFT Maintenance Log

The AIRCRAFT LOG is accessible from both the RMU and RTIU. Only FAIL ERRORS and INSTALL ERRORS as described in section 2.0 are logged in the AIRCRAFT LOG. Errors which are logged in the AIRCRAFT LOG are removed from the log after 20 power-on counts.

3.2 TROUBLESHOOT Maintenance Log

The TROUBLESHOOT LOG is not accessible from the RMU in an aircraft installation. All error types (FAIL ERRORS, INSTALL ERRORS, TROUBLESHOOT ERRORS and BENCH TEST ERRORS) are logged in the TROUBLESHOOT log. All errors which are logged in the AIRCRAFT LOG are also logged in the TROUBLESHOOT LOG, however errors are not removed from the TROUBLESHOOT log based on the number of power-on counts.

4. ERROR CODE LIST

The following list contains all error codes which may be logged in the maintenance logs, and contains the hexadecimal error code and ASCII name which is displayed on the RTIU or RMU, and brief description of the error. Note some errors have more than one hexadecimal error code, which indicates the error may occur during different test modes. The ASCII name is chosen to describe which CCA most likely caused the error.

ERROR CODES	ASCII	ERROR DESCRIPTION
03	DATA BUS	RCB CHECKSUM failed.
04	DATA BUS	RCB TIMEOUT occurred.
08	COMPUTER	WATCHDOG RESET occurred on current power-on count.
09 89	COMPUTER	EEPROM DATA - Calibration data is corrupted.
21 A1	COMPUTER	FLASH EPROM DATA - FLASH Program is corrupted.
22 A2	COMPUTER	BOOT EPROM DATA - BOOT Program is corrupted.
23 A3	XMITTER	RF TOP ANTENNA FORWARD POWER out of limits.
24 A4	XMITTER	RF BOTTOM ANTENNA FORWARD POWER out of limits.
25 A5	PWR SPLY	TRANSMITTER DUTY CYCLE error.
26 A6	INT TEMP	INTERNAL MODULE TEMPERATURE error.
27 A7	PWR SPLY	+60VDC POWER SUPPLY out of limits.
28 A8	PWR SPLY	+50VDC POWER SUPPLY out of limits.
29 A9	PWR SPLY	+28VDC POWER SUPPLY out of limits.
2A AA	PWR SPLY	+15VDC POWER SUPPLY out of limits.
2B AB	PWR SPLY	-5VDC POWER SUPPLY out of limits.
2C AC	PWR SPLY	-15VDC POWER SUPPLY out of limits.
2D AD	PWR SPLY	-150VDC POWER SUPPLY out of limits.
2E AE	XMITTER	LOCAL OSCILLATOR OUTPUT POWER out of limits.
2F AF	XMITTER	LOCAL OSCILLATOR OFF FREQUENCY.
AF	XMITTER	LOCAL OSCILLATOR VCO TUNING VOLTAGE (BENCH TEST MODE).
B0	RECEIVER	RF MODE-S RECEIVER LOOP-BACK test failed.
B1	COMPUTER	RF ASIC RAM test failed.
32 B2	STRAPS	STRAP BUS PARITY error.
33 B3	STRAPS	STRAP BUS READ error.
34	STRAPS	INVALID MODE S ADDRESS straps set.
35 B5	COMPUTER	ARINC ASIC INTERNAL LOOP-BACK test failed.
B6	RECEIVER	RF ATCRBS RECEIVER LOOP-BACK test failed.
37 B7	PWR SPLY	TOP PIN VOLTAGE DURING TRANSMISSION ON TOP ANTENNA.
38 B8	PWR SPLY	TOP PIN VOLTAGE DURING RECEIVE ON TOP ANTENNA.
39 B9	PWR SPLY	BOTTOM PIN VOLTAGE DURING TRANSMISSION ON BOTTOM ANTENNA.
3A BA	PWR SPLY	BOTTOM PIN VOLTAGE DURING RECEIVE ON BOTTOM ANTENNA.
3B BB	PWR SPLY	PULSE MOD VOLTAGE DURING TRANSMISSION out of limits.

REV LTR P

3C	BC	PWR SPLY	ENVELOPE MOD VOLTAGE DURING TRANSMISSION out of limits.
3D	BD	INTERFAC	DISCRETE OUTPUT OVER-CURRENT MONITOR out of limits.
3F	BF	INTERFAC	MUTUAL SUPPRESSION MONITOR - test failed.
42		CHK TCAS	TCAS BUS COMMUNICATION failure.
43		CHK DLPA	DLP A/B BUS COMMUNICATION failure.
44		CHK DLPC	DLP C/D BUS COMMUNICATION failure.
45		CHK ADC1	ADC1 TO XPDR BUS COMMUNICATION failure.
46		CHK ADC2	ADC2 TO XPDR BUS COMMUNICATION failure.
47		CHK CTL1	CTL1 TO XPDR BUS COMMUNICATION failure.
48		CHK CTL2	CTL2 TO XPDR BUS COMMUNICATION failure.
49		CHK OUTP	XPDR_VALID(NO) OVER-CURRENT MONITOR - test failed.
	C9	INTERFAC	XPDR_VALID(NO) OVER-CURRENT MONITOR - test failed.
4A		CHK OUTP	XPDR_VALID(PO) OVER-CURRENT MONITOR - test failed.
	CA	INTERFAC	XPDR_VALID(PO) OVER-CURRENT MONITOR - test failed.
4B		CHK OUTP	XPDR_ACTIVE(NO) OVER-CURRENT MONITOR - test failed.
	CB	INTERFAC	XPDR_ACTIVE(NO) OVER-CURRENT MONITOR - test failed.
4C		CHK OUTP	ALT_VALID(NO) OVER-CURRENT MONITOR - test failed.
	CC	INTERFAC	ALT_VALID(NO) OVER-CURRENT MONITOR - test failed.
4D		CHK OUTP	RSV_OUTPUT1(NO) OVER-CURRENT MONITOR - test failed.
	CD	INTERFAC	RSV_OUTPUT(NO) OVER-CURRENT MONITOR - test failed.
4E		CHK FAN	FAN TURN-ON FAILURE.
4F		CHK FAN	FAN TURN-OFF FAILURE.
51		STRAPS	INVALID ALTITUDE SOURCE strap selected.
	D2	PWR SPLY	+28V FILTERED MONITOR out of limits.
	D3	PWR SPLY	PULSE MOD VOLTAGE DURING RECEIVE out of limits.
	D4	PWR SPLY	ENVELOPE MOD VOLTAGE DURING RECEIVE out of limits.
	D5	XMITTER	LOCAL OSCILLATOR SYNTHESIZER UNLOCKED.
	D6	PWR SPLY	INITIAL PS VOLTAGE out of limits.
	D7	PWR SPLY	PULSE +40V VOLTAGE out of limits.
58		PWR SPLY	ST ENABLE VOLTAGE DURING NORMAL OPERATION out of limits.
	D8	PWR SPLY	ST ENABLE VOLTAGE DURING TEST OPERATION limits.
	D9	PWR SPLY	BOOST CURRENT VOLTAGE out of limits.
	E0	INTERFAC	ARINC I/O EXTERNAL LOOP-BACK - test failed.
	E1	INTERFAC	ARINC I/O EXTERNAL LOOP-BACK - test failed.
	E2	INTERFAC	DISCRETE I/O PORT #0 EXTERNAL LOOP-BACK - test failed.
	E3	INTERFAC	DISCRETE I/O PORT #0 EXTERNAL LOOP-BACK - test failed.
	E4	INTERFAC	DISCRETE I/O PORT #1 EXTERNAL LOOP-BACK - test failed.
	E5	INTERFAC	DISCRETE I/O PORT #1 EXTERNAL LOOP-BACK - test failed.
	E6	INTERFAC	DISCRETE I/O PORT #2 EXTERNAL LOOP-BACK - test failed.
	E7	INTERFAC	DISCRETE I/O PORT #2 EXTERNAL LOOP-BACK - test failed.
	E8	INTERFAC	DISCRETE I/O PORT #3 EXTERNAL LOOP-BACK - test failed.
	E9	INTERFAC	DISCRETE I/O PORT #3 EXTERNAL LOOP-BACK - test failed.

5. ERROR CODE DEFINITION

The definition for error codes are listed in this section. The error code description includes the parameter definition, parameter limits, a description of the test which caused the error, and an aid for diagnosing the cause of the error. The error classification (FAIL, INSTALL, TROUBLESHOOT, BENCH TEST) is listed in the title for the error.

The error code parameter which is displayed on the RTIU is a 5 digit decimal number (base 10). In the following definitions, the digits are specified as #0 to #4 where #0 is the 1's digit and #4 is the 10,000's digit. Where numbers are specified as SIGNED, a "1" in digit #4 represents a negative number. UNSIGNED numbers are assumed to be positive for all values of digit #4.

RCB CHECKSUM (03 COMPUTER) - TROUBLESHOOT ERROR

DESCRIPTION:

The transponder communicates with the COM CLUSTER or RTIU on the RCB data bus every 50 milli-seconds. Part of the data communication packet includes a checksum, which detects data errors in the communication. The error will occur if no valid RCB checksums are received for the specified period of time.

PARAMETER:
NONE (set to 0)

ERROR LIMITS:
No valid RCB checksums received for a period of 5 seconds.

RCB TIMEOUT (04 COMPUTER) - TROUBLESHOOT ERROR

DESCRIPTION:

The transponder communicates with the COM CLUSTER or RTIU on the RCB data bus every 50 milli-seconds. If NO valid communication packets are exchanged for the specified period of time, the error will occur.

PARAMETER:
UNSIGNED DIGITS

Digit #0, 1 = Framing Errors / 0 = No framing errors.
Digit #1, 1 = Overrun Errors / 0 = No overrun errors.
Digits #2-#4, unused.

ERROR LIMITS:
No valid RCB communications have occurred for 5 seconds.

WATCHDOG RESET (08 COMPUTER) - TROUBLESHOOT ERROR

DESCRIPTION:

The error occurs when the microcontroller is reset in current power-on count by the WATCHDOG timer circuitry AND a warm start was detected. The WATCHDOG timer circuit (U12, MAX691) on the PROCESSOR CCA will reset the microcontroller (U1, 80C186EB) if the microcontroller does not toggle the WDRESET input of the WATCHDOG timer circuit (U12 pin 11) within a period of time. If a WARM START is not detected when the reset occurs, the error will not be logged. The WARM START is a monitor on the POWER SUPPLY/MODULATOR CCA, and is read by the microcontroller with the Analog to Digital Converter (U30, AD7576) on the PROCESSOR CCA.

PARAMETER:
NONE (set to 0)

ERROR LIMITS:
Not Applicable

EEPROM DATA (09/89 COMPUTER) - FAIL AND BENCH TEST ERROR

DESCRIPTION:

When power is applied to the system in normal operation or when the BENCH TEST/BURN-IN TEST command is activated, the microcontroller performs a Cyclical Redundancy Check (CRC) test on the calibration data which is stored in EEPROM (U8, 28C64). The test checks if the data has been corrupted since it was originally loaded in memory. If a loss of data is detected, an error is logged.

An 09 error is logged on power-on if the data in the EEPROM has been corrupted. If a PAST or POST operation is executed, or the BENCH TEST/BURN-IN TEST operation is executed, it will additionally log an 89 error.

PARAMETER:
UNSIGNED DIGITS

Digit #0, Keyword Flag: 0 = Valid / 1 = Invalid
Digit #1, CRC Flag: 0 = Valid / 1 = Invalid
Digit #2-#4, unused.

ERROR LIMITS:
Not Applicable

FLASH EPROM DATA (21/A1 COMPUTER) - FAIL AND BENCH TEST ERROR

DESCRIPTION:

When power is applied to the system in normal operation or when the BENCH TEST/BURN-IN TEST command is activated, the microcontroller performs a Cyclical Redundancy Check (CRC) and Checksum Test on the FLASH PROGRAM which is stored in FLASH EPROM (U3, U6, 28F010). The tests check if the data has been corrupted since it was originally loaded in memory.

If a loss of data is detected, an error is logged. The CRC and Checksum are different methods of detecting data loss, and both tests are performed.

A 21 error is logged on power-on if the data in either FLASH EPROM has been corrupted. If a PAST or POST operation is executed, or the BENCH TEST/BURN-IN TEST operation is executed, it will log a A1 error.

PARAMETER:
UNSIGNED DIGITS

Digit #0, Checksum Flag: 0 = Valid / 1 = Invalid
Digit #1, CRC Flag: 0 = Valid / 1 = Invalid
Digits #2-#4, unused.

ERROR LIMITS:
Not Applicable

BOOT EPROM DATA (22/A2 COMPUTER) - FAIL AND BENCH TEST ERROR

DESCRIPTION:

When power is applied to the system in normal operation or when the BENCH TEST/BURN-IN TEST command is activated, the microcontroller performs a Checksum Test on the BOOT PROGRAM which is stored in EPROM (U4, U7, 27C256). The tests check if the data has been corrupted since it was originally loaded in memory. If a loss of data is detected, an error is logged.

A 22 error is logged on power-on if the data in either BOOT EPROM has been corrupted. If a PAST or POST operation is executed, or the BENCH TEST/BURN-IN TEST operation is executed, it will log a A2 error.

PARAMETER:
NONE (set to 0)

ERROR LIMITS:
Not Applicable

RF TOP ANTENNA FORWARD POWER (23/A3 XMITTER) - FAIL AND BENCH TEST ERROR

DESCRIPTION:

During normal operation, the transponder transmits a SQUITTER transmission periodically (approximately once per second) when it is in an active (non-STANDBY) mode. During this transmission, the TOP FORWARD POWER monitor voltage is sampled by the Analog/Digital converter on the PROCESSOR CCA. If the voltage is out of specification for 5 consecutive samples, an "23 XMITTER" is logged. During PAST/POST operational mode, if the voltage is out of specification for 1 transmission, "A3 XMITTER" is logged. The voltage limits for this test condition it the FAIL ERROR limit.

During BENCH TEST/BURN-IN TEST mode, a test transmission operation is performed. If the voltage is out of specification for 1 transmission, "A3 XMITTER" is logged. The voltage limits for this condition is the BENCH TEST limit.

PARAMETER:
UNSIGNED DIGITS, Units 0.1 Volts.

Voltage at POWER SUPPLY/MODULATOR CCA, TOP_FWD_PWR_MON signal (J3-21).

ERROR LIMITS:
FAIL ERROR: <0.70V OR >5.00V is an ERROR condition.
BENCH TEST: <1.60V OR >4.50V is an ERROR condition.

RF BOTTOM ANTENNA FORWARD POWER (24/A4 XMITTER) - FAIL AND BENCH TEST ERROR

DESCRIPTION:

The monitor is identical to the RF TOP ANTENNA FORWARD POWER monitor, except it is for the BOTTOM antenna.

PARAMETER:
UNSIGNED DIGITS, Units 0.1 Volts.

Voltage at POWER SUPPLY/MODULATOR CCA, BOT_FWD_PWR_MON signal (J3-22).

ERROR LIMITS:
FAIL ERROR: <0.70V OR >5.00V is an ERROR condition.
BENCH TEST: <1.60V OR >4.50V is an ERROR condition.

TRANSMITTER DUTY CYCLE (25/A5 PWR SPLY) - TROUBLESHOOT AND BENCH TEST ERROR

DESCRIPTION:

The POWER SUPPLY/MODULATOR CCA contains a protection circuitry which keeps the transmitter from being harmed through excessive transmissions. If the over-duty cycle condition occurs, the monitor (OVER_DUTY_MON signal) is read by the Analog to Digital converter on the PROCESSOR CCA, and an error is logged.

During normal operation, if the monitor is out of voltage limits for 5 consecutive samples a "25 PWR SPLY" error is logged as a TROUBLESHOOT ERROR, using TROUBLESHOOT limits.

During BENCH TEST/BURN-IN TEST operation, if the monitor is out of voltage limits for 1 sample a "A5 PWR SPLY" error is logged, using BENCH TEST limits.

PARAMETER:
UNSIGNED DIGITS, Units 0.1 Volts.

Voltage at POWER SUPPLY/MODULATOR CCA, OVER_DUTY_MON signal (U4 Pin 2).

ERROR LIMITS:
TROUBLESHOOT: <2.5V OR >6.0V is an ERROR condition.
BENCH TEST: <3.5V OR >5.5V is an ERROR condition.

INTERNAL MODULE TEMPERATURE (26/A6 PWR SPLY) - TROUBLESHOOT AND BENCH TEST ERROR

DESCRIPTION:

The POWER SUPPLY/MODULATOR CCA contains a temperature sensor (U14) which monitors the internal system temperature. If the sensor is outside the normal operating temperature range of the unit, an error is logged.

During normal operation, if the monitor is out of temperature limits for 5 consecutive samples a "26 PWR SPLY" error is logged as a TROUBLESHOOT ERROR, using TROUBLESHOOT limits.

During BENCH TEST/BURN-IN TEST operation, if the monitor is out of temperature limits for 1 sample a "A6 PWR SPLY" error is logged, using BENCH TEST limits.

PARAMETER:
SIGNED DIGITS, Units 1 Degree Centigrade.

ERROR LIMITS:
TROUBLESHOOT: <-75 OR >100 Degrees is an ERROR condition.
BENCH TEST: <-80 OR >110 Degrees is an ERROR condition.

POWER SUPPLY ERRORS - TROUBLESHOOT AND BENCH TEST ERRORS

DESCRIPTION:

The POWER SUPPLY/MODULATOR CCA monitors each internally generated power supply voltage. If the voltage is outside the operating limits, an error is logged.

During normal operation, if the monitor is out of limits for 5 consecutive samples a error is logged as a TROUBLESHOOT ERROR, using TROUBLESHOOT limits.

During BENCH TEST/BURN-IN TEST operation, if the monitor is out of temperature limits for 1 or 2 samples (as indicated in the following table) a error is logged, using BENCH TEST limits.

The following error codes are assigned for TROUBLESHOOT and BENCH TEST errors:

TROUBLESHOOT SUPPLY	BENCH TEST ERROR CODE	ERROR CODE	#SAMPLES
+60VDC	27 PWR SPLY	A7 PWR SPLY	2
+50VDC	28 PWR SPLY	A8 PWR SPLY	2
+28VDC	29 PWR SPLY	A9 PWR SPLY	1
+15VDC	2A PWR SPLY	AA PWR SPLY	1
-5VDC	2B PWR SPLY	AB PWR SPLY	1
-15VDC	2C PWR SPLY	AC PWR SPLY	1
-150VDC	2D PWR SPLY	AD PWR SPLY	1

PARAMETER:
SIGNED DIGITS, Units 0.1 VDC.

ERROR LIMITS:

TROUBLESHOOT	BENCH TEST			
SUPPLY	LOW	HIGH	LOW	HIGH
+60VDC	+45.0V	+66.0V	+48.0V	+63.0V
+50VDC	+42.0V	+55.0V	+44.0V	+53.0V
+28VDC	+24.0V	+31.0V	+25.0V	+29.0V
+15VDC	+12.0V	+18.0V	+13.5V	+16.5V
-5VDC	-6.0V	-3.5V	-5.2V	-4.0V
-15VDC	-18.0V	-12.0V	-16.5V	-13.5V
-150VDC	-180.0V	-100.0V	-165.0V	-110.0V

LOCAL OSCILLATOR OUTPUT POWER (2E/AE XMITTER) - TROUBLESHOOT AND BENCH TEST ERROR

DESCRIPTION:

The TRANSMITTER CCA has a monitor which detects the RF power level of the 1090MHz Local Oscillator. The voltage from the monitor is read by the Analog to Digital converter on the PROCESSOR CCA. If a voltage is detected outside of the normal operational range, an error is logged.

During normal operation, if the monitor is out of range for 5 consecutive samples a "2E XMITTER" error is logged as a TROUBLESHOOT ERROR, using TROUBLESHOOT limits.

During BENCH TEST/BURN-IN TEST operation, if the monitor is out of range for 1 sample a "AE XMITTER" error is logged, using BENCH TEST limits.

PARAMETER:
UNSIGNED DIGITS, Units 0.1 Volts.

Voltage on POWER SUPPLY/MODULATOR CCA, LO_LEVEL_MON signal (J2 pin 35).

ERROR LIMITS:
TROUBLESHOOT: <0.5 OR >4.0 Volts is an ERROR condition.
BENCH TEST: <1.0 OR >3.0 Volts is an ERROR condition.

LOCAL OSCILLATOR OFF FREQUENCY (2F/AF XMITTER) - FAIL ERROR

DESCRIPTION:

The 1090MHz Local Oscillator on the TRANSMITTER CCA is monitored for being on frequency. An off-frequency condition is determined by the Local Oscillator VCO Tuning voltage being out of range, and the synthesizer lock detect monitor in a unlocked condition. The following two signals must both be in an ERROR state for the monitor to log an error:

- VCO Tuning Voltage (U6 pin 7) on the TRANSMITTER CCA (VCO_TUNING_MON signal on the POWER SUPPLY/MODULATOR CCA).
- TP_SYNTH_LOCK signal on the POWER SUPPLY/MODULATOR CCA (J3 pin 16).

During normal operation, if BOTH monitors are out of range for 5 consecutive samples a "2F XMITTER" error is logged as a FAIL ERROR.

During PAST/POST operation, if BOTH monitors are out of range for 1 sample, a "AF XMITTER" error is logged as a FAIL ERROR.

PARAMETER:
UNSIGNED DIGITS, Units 0.1 Volts.

VCO Tuning Voltage on TRANSMITTER CCA (U6 pin 7).

NOTE: The VCO_TUNING_MON signal (J2 pin 15) on POWER SUPPLY/MODULATOR CCA is the VCO Tuning Voltage after a resistor divider. The parameter recorded is the voltage before the divider.

ERROR LIMITS:
VCO Tuning Voltage: <1.0 OR >11.0 Volts is an ERROR condition.
TP_SYNTH_LOCK: <2.5 Volts is an ERROR condition.

LOCAL OSCILLATOR VCO TUNING VOLTAGE (AF XMITTER) - BENCH TEST ERROR

DESCRIPTION:

During BENCH TEST/BURN-IN TEST operation, the 1090MHz Local Oscillator VCO Tuning voltage on the TRANSMITTER CCA is monitored being out of range. A "AF XMITTER" error is logged if it is out of range for 1 sample. The VCO Tuning voltage monitor is the VCO Tuning Voltage signal on the TRANSMITTER CCA (U6 pin 7). This error is different from the LOCAL OSCILLATOR OFF FREQUENCY error (AF XMITTER), which is logged during normal operation.

PARAMETER:
UNSIGNED DIGITS, Units 0.1 Volts.

VCO Tuning Voltage on TRANSMITTER CCA (U6 pin 7).

NOTE: The VCO_TUNING_MON signal (J2 pin 15) on POWER SUPPLY/MODULATOR CCA is the VCO Tuning Voltage after a resistor divider. The parameter recorded is the voltage before the divider.

ERROR LIMITS:
BENCH TEST: <2.0 OR >9.5 Volts is an ERROR condition.

RF MODE-S RECEIVER LOOP-BACK (B0 RECEIVER) - FAIL AND BENCH TEST ERROR

DESCRIPTION:

The RF loop-back self test generates an RF test interrogation which is injected in the receiver and decoded. The RF ASIC on the PROCESSOR CCA generates Mode S self test modulation signals which modulates the self test generator on the POWER SUPPLY/MODULATOR CCA. The modulates self-test signal is converted to RF and injected in the receiver front-end on the TRANSMITTER CCA. The transponder then expects the test interrogation to be received and decoded by the RF ASIC.

During PAST/POST operation mode, the RF loop-back test generates test interrogations until either 5 valid interrogations are received or 99 test interrogations have been generated. If 5 valid interrogations were not received, "B0 RECEIVER" error is logged, which is a FAIL ERROR. When the system is strapped for diversity antennas, both TOP and BOTTOM receiver channels are tested independently. When the system is strapped for a single antenna, only the BOTTOM receiver channel is tested.

During BENCH TEST/BURN-IN TEST operation mode, the RF loop-back test continuously generates test interrogations. If less than 90 valid interrogations are received for every 99 test interrogations, a "B0 RECEIVER" error is generated, which is a BENCH TEST ERROR. Both TOP and BOTTOM receiver channels are tested independently.

PARAMETER:
UNSIGNED DIGITS, PARAMETER = xxyy

xx - Number of times interrogations failed on BOTTOM Antenna, maximum 99 (Digit# 3,2).

yy - Number of times interrogations failed on TOP Antenna, maximum 99 (Digit# 1,0).

ERROR LIMITS:
FAIL ERROR: <5 Valid interrogations is an ERROR condition.
BENCH TEST: <90 Valid interrogations is an ERROR condition.

RF ASIC RAM TEST (B1 COMPUTER) - FAIL AND BENCH TEST ERROR

DESCRIPTION:

The RF ASIC on the PROCESSOR CCA contains internal Random Access Memory (RAM) which is used for receiving interrogations and generating replies. During both PAST/POST and BENCH TEST/BURN-IN TEST operational modes, the transponder tests the RF ASIC RAM memory by writing patterns to the memory and verifying the patterns can be read back. A failure results in a "B1 COMPUTER" error being logged. In PAST/POST modes, this is a FAIL ERROR.

PARAMETER:
NONE (Set to 0)

ERROR LIMITS:
Not Applicable.

STRAP BUS PARITY (32/B2 STRAPS) - INSTALL ERROR (XS-854 STAND-ALONE ONLY)

DESCRIPTION:

This error is only used when the module is operating as a XS-854 stand-alone transponder. The transponder reads the STRAP CARD from the strap bus on system power-on. Straps W3 and W4 on the STRAP CARD are used to set the parity of the straps to allow for error detection. If the parity straps W3 and W4 are not correctly set, a "32 STRAPS" error is logged as an INSTALL ERROR. If a self-test operation is initiated during this condition, a "B2 STRAPS" error will be logged.

PARAMETER:
NONE (Set to 0)

ERROR LIMITS:
Not Applicable.

STRAP BUS READ (33/B3 STRAPS) - INSTALL ERROR (XS-854 STAND-ALONE ONLY)

DESCRIPTION:

This error is only used when the module is operating as a XS-854 stand-alone transponder. The transponder reads the STRAP CARD from the strap bus on system power-on a minimum of 2 times, and a maximum of 10 times. If the straps reads do not agree for two consecutive reads, a "33 STRAPS" error will be logged as an INSTALL ERROR. If a self-test operation is initiated during this condition, a "B3 STRAPS" error will be logged.

PARAMETER:
NONE (Set to 0)

ERROR LIMITS:
Not Applicable.

INVALID MODE S ADDRESS (34 STRAPS) - INSTALL ERROR

DESCRIPTION:

Part of the STRAP information for the transponder includes a 24-bit Mode S Address. The address is set on the STRAP CARD on the unit mount. An address of all 0's or all 1's is a illegal address. If this occurs, a "34 STRAPS" error will be logged as an INSTALL ERROR.

PARAMETER:
NONE (Set to 0)

ERROR LIMITS:
Not Applicable.

ARINC ASIC INTERNAL LOOP-BACK (35/B5 COMPUTER) - FAIL AND BENCH TEST ERRORS

DESCRIPTION:

The ARINC ASIC on the PROCESSOR CCA contains 4 transmitter channels and 8 receiver channels, which are internally multiplexed to give 16 sets of receiver inputs. The 4 transmitter channels are connected to 4 spare receiver inputs on the PROCESSOR CCA to provide for a transmitter to receiver loop-back test. The ARINC ASIC test transmits a label from each of the transmitter channels and checks that the labels were received on the receiver channels. A failure to receive a label is a test failure.

During normal operation, the ARINC ASIC test is executed when power is applied to the system. If the test fails, a "35 COMPUTER" error is logged which is a FAIL ERROR. If PAST/POST mode is executed during this power-on count, a "B5 COMPUTER" error is logged, which is a FAIL ERROR.

During BENCH TEST/BURN-IN TEST modes, the test is continuously executed, and a "B5 COMPUTER" error is logged if a failure occurs, which is a BENCH TEST ERROR.

PARAMETER:
UNSIGNED DIGITS

Digit #0: DLP A/B BUS 0 = pass / 1 = fail
Digit #1: TCAS BUS 0 = pass / 1 = fail
Digit #2: DLP C/D BUS 0 = pass / 1 = fail
Digit #3: RESERVED BUS 0 = pass / 1 = fail

ERROR LIMITS:
Not Applicable.

RF ATCRBS RECEIVER LOOP-BACK (B6 RECEIVER) - FAIL AND BENCH TEST ERROR

DESCRIPTION:

This test is identical in operation to the RF MODE S RECEIVER LOOP-BACK (B0 RECEIVER), except an ATCRBS self-test interrogation is used instead of a MODE S self-test interrogation. The "B6 RECEIVER" error is logged if failures occur.

PARAMETER:
UNSIGNED DIGITS, PARAMETER = xxyy

xx - Number of times interrogations failed on BOTTOM Antenna, maximum 99 (Digit# 3,2).

yy - Number of times interrogations failed on TOP Antenna, maximum 99 (Digit# 1,0).

ERROR LIMITS:
FAIL ERROR: <5 Valid interrogations is an ERROR condition.
BENCH TEST: <90 Valid interrogations is an ERROR condition.

TOP PIN VOLTAGE DURING TRANSMISSION ON TOP ANTENNA (37/B7 PWR SPLY) TROUBLESHOOT AND BENCH TEST ERROR

DESCRIPTION:

The TOP ANTENNA PIN Diode voltage (TP_TOP_PIN_DRVR) which is generated on the POWER SUPPLY/MODULATOR CCA is monitored by the Analog to Digital converter on the PROCESSOR CCA. The voltage is tested during a transmission from the TOP ANTENNA, when the PIN Diode is in the OFF (reverse biased) state. An error is logged if the voltage is out of limits.

During normal operation, the TOP PIN Diode voltage is monitored during a squitter from the TOP antenna. If 5 consecutive samples are out of limits, a "37 PWR SPLY" error is logged as a TROUBLESHOOT error. If the system is strapped as a "SINGLE" antenna, the TOP PIN Diode voltage is not tested. If the system is in STANDBY mode, the test is not performed.

During BENCH TEST/BURN-IN TEST operation, the TOP PIN Diode voltage is monitored during test transmissions from the TOP antenna. If 1 sample is out of limits, a "B7 PWR SPLY" error is logged as a TROUBLESHOOT error.

REV LTR
P

PARAMETER:
SIGNED DIGITS, Units 0.1 Volts.

Voltage on POWER SUPPLY/MODULATOR CCA, TP_TOP_PIN_DRVR signal (J3 pin 17).

ERROR LIMITS:
TROUBLESHOOT: <-190.0 OR >-90.0 Volts is an ERROR condition.
BENCH TEST: <-170.0 OR >-100.0 Volts is an ERROR condition.

TOP PIN VOLTAGE DURING RECEIVE ON TOP ANTENNA (38/B8 PWR SPLY) TROUBLESHOOT AND BENCH TEST ERROR

DESCRIPTION:

The TOP ANTENNA PIN Diode voltage (TP_TOP_PIN_DRVR) is tested during a time when the PIN Diode is in the ON (forward biased) state. This condition occurs when the transponder is in a receive mode or is transmitting on the BOTTOM antenna. An error is logged if the voltage is out of limits.

During normal operation, the TOP PIN Diode voltage is monitored when the NOT transmitting from the TOP antenna. If 5 consecutive samples are out of limits, a "38 PWR SPLY" error is logged as a TROUBLESHOOT error.

During BENCH TEST/BURN-IN TEST operation, the TOP PIN Diode voltage is monitored when NOT transmitting from the TOP antenna. If 1 sample is out of limits, a "B8 PWR SPLY" error is logged as a TROUBLESHOOT error.

PARAMETER:
SIGNED DIGITS, Units 0.1 Volts.

Voltage on POWER SUPPLY/MODULATOR CCA, TP_TOP_PIN_DRVR signal (J3 pin 17).

ERROR LIMITS:
TROUBLESHOOT: <-30.0 OR >+30.0 Volts is an ERROR condition.
BENCH TEST: <-20.0 OR >+20.0 Volts is an ERROR condition.

BOTTOM PIN VOLTAGE DURING TRANSMISSION ON BOTTOM ANTENNA (39/B9 PWR SPLY) TROUBLESHOOT AND BENCH TEST ERROR

DESCRIPTION:

This error is identical to the TOP PIN VOLTAGE DURING TRANSMISSION ON TOP ANTENNA (37/B7 PWR SPLY), except it is for the BOTTOM ANTENNA PIN Diode (TP_BOT_PIN_DRVR). A "39 PWR SPLY" error is logged as a TROUBLESHOOT error during normal operation, and a "B9 PWR SPLY" error is logged during BENCH TEST/BURN-IN TEST operation. The "SINGLE" antenna strap condition does not apply to this error during normal operation, since the BOTTOM antenna is used in all configurations.

PARAMETER:
SIGNED DIGITS, Units 0.1 Volts.

REV LTR P

Voltage on POWER SUPPLY/MODULATOR CCA, TP_BOT_PIN_DRVR signal (J3 pin 18).

ERROR LIMITS:
TROUBLESHOOT: <-190.0 OR >-90.0 Volts is an ERROR condition.
BENCH TEST: <-170.0 OR >-100.0 Volts is an ERROR condition.

BOTTOM PIN VOLTAGE DURING RECEIVE ON BOTTOM ANTENNA (3A/BA PWR SPLY) TROUBLESHOOT AND BENCH TEST ERROR

DESCRIPTION:

The error is identical to the TOP PIN VOLTAGE DURING RECEIVE ON TOP ANTENNA (38/B8 PWR SPLY), except is for the BOTTOM ANTENNA PIN Diode (TP_BOT_PIN_DRVR). A "3A PWR SPLY" error is logged as a TROUBLESHOOT error during normal operation, and a "BA PWR SPLY" error is logged during BENCH TEST/BURN-IN TEST operation.

PARAMETER:
SIGNED DIGITS, Units 0.1 Volts.

Voltage on POWER SUPPLY/MODULATOR CCA, TP_BOT_PIN_DRVR signal (J3 pin 18).

ERROR LIMITS:
TROUBLESHOOT: <-30.0 OR >+30.0 Volts is an ERROR condition.
BENCH TEST: <-20.0 OR >+20.0 Volts is an ERROR condition.

PULSE MOD VOLTAGE DURING TRANSMISSION (3B/BB PWR SPLY) TROUBLESHOOT AND BENCH TEST ERROR

DESCRIPTION:

The PULSE MODULATOR (TP_+28V_PULSEMOD) voltage which is generated on the POWER SUPPLY/MODULATOR CCA to modulate the transmitter is monitored by the Analog to Digital converter on the PROCESSOR CCA. The voltage is tested during a transmission, when the PULSE MOD is in the ON state (+28V). An error is logged if the voltage is out of limits.

During normal operation, the PULSE MODULATOR voltage is monitored during a squitter transmission. If 5 consecutive samples are out of limits, a "3B PWR SPLY" error is logged as a TROUBLESHOOT error. If the system is in STANDBY mode, the test is not performed.

During BENCH TEST/BURN-IN TEST operation, the PULSE MODULATOR voltage is monitored during test transmissions. If 1 sample is out of limits, a "BB PWR SPLY" error is logged as a TROUBLESHOOT error.

PARAMETER:
UNSIGNED DIGITS, Units 0.1 Volts.

Voltage on POWER SUPPLY/MODULATOR CCA, TP_+28V_PULSEMOD signal (J3 pin 13).

ERROR LIMITS:
TROUBLESHOOT: <19.0 OR >31.0 Volts is an ERROR condition.
BENCH TEST: <21.0 OR >29.0 Volts is an ERROR condition.

ENVELOPE MOD VOLTAGE DURING TRANSMISSION (3C/BC PWR SPLY) TROUBLESHOOT AND BENCH TEST ERROR

DESCRIPTION:

The ENVELOPE MODULATOR (TP_+28V_ENVELOPE) voltage which is generated on the POWER SUPPLY/MODULATOR CCA to bracket the transmitter during a transmission is monitored by the Analog to Digital converter on the PROCESSOR CCA. The voltage is tested during a transmission, when the ENVELOPE MODULATOR is in the ON state (+28V). An error is logged if the voltage is out of limits.

During normal operation, the ENVELOPE MODULATOR voltage is monitored during a squitter transmission. If 5 consecutive samples are out of limits, a "3C PWR SPLY" error is logged as a TROUBLESHOOT error. If the system is in STANDBY mode, the test is not performed.

During BENCH TEST/BURN-IN TEST operation, the ENVELOPE MODULATOR voltage is monitored during test transmissions. If 1 sample is out of limits, a "BC PWR SPLY" error is logged as a TROUBLESHOOT error.

PARAMETER:
UNSIGNED DIGITS, Units 0.1 Volts.

Voltage on POWER SUPPLY/MODULATOR CCA, TP_+28V_ENVELOPE signal (J3 pin 14).

ERROR LIMITS:
TROUBLESHOOT: <19.0 OR >31.0 Volts is an ERROR condition.
BENCH TEST: <21.0 OR >29.0 Volts is an ERROR condition.

DISCRETE OUTPUT OVER-CURRENT MONITOR (3D/BD INTERFAC) - TROUBLESHOOT AND BENCH TEST ERROR

DESCRIPTION:

Each discrete output contains a over-current monitor which protects the outputs from damage if the outputs are directly shorted to +28V (for NEGATIVE outputs) or GROUND (for POSITIVE outputs). In addition to limiting the current through the transistor outputs, the monitor also indicates an over-current condition to the micro-controller, which turns the outputs OFF to protect the devices. This test verifies that the monitors are working correctly. The test verifies that when the outputs are turned OFF, the monitor does NOT indicate an over-current condition.

During normal operation, when power is first applied to the system, all discrete outputs are turned OFF, and the monitors are checked. If one or more monitors indicate an over-current condition, a "3D INTERFACE" error is logged as a TROUBLESHOOT error.

During BENCH TEST/BURN-IN TEST operation, the outputs are continuously tested. An over-current condition which occurs with the outputs OFF is logged as a "BD INTERFAC" error, which is a BENCH TEST error.

NOTE: The XS-852A Transponder model (IAC VERSION) only contains one discrete output XPDR_ACTIVE(NO). The other outputs are not tested with this model.

REV LTR
P

PARAMETER:
UNSIGNED DIGITS

Digit #4: ALT_VALID_MON 0 = pass / 1 = fail
Digit #3: RSV_OUTPUT_MON 0 = pass / 1 = fail
Digit #2: XPDR_ACTIVE_MON 0 = pass / 1 = fail
Digit #1: XPDR_VALID_N_MON 0 = pass / 1 = fail
Digit #0: XPDR_VALID_P_MON 0 = pass / 1 = fail

NOTE: Digits 0,1,3,4 are unused on XS-852A Module.

ERROR LIMITS:
Not Applicable.

MUTUAL SUPPRESSION MONITOR (3F/BF INTERFAC) - TROUBLESHOOT AND BENCH TEST ERROR

DESCRIPTION:

The MUTUAL SUPPRESSION (MUT_SUP(PO)) interface is an input/output bus which is connected on the airplane to keep only one L-band system from transmitting at a time. When the transponder transmits a reply, the MUT_SUP(PO) bus is driven to an active state (+28V). When an external system sets the MUT_SUP(PO) to an active state, the transponder suppresses replies to interrogations. The RF ASIC on the PROCESSOR CCA asserts an output during a reply which turns on a driver transistor on the INTERFACE CCA. The INTERFACE CCA has a receiver which converts the external signal level to a digital signal which is input by the RF ASIC. The monitor tests the MUT_SUP(PO) operation after transmitting a reply by verifying that MUT_SUP(PO) was asserted during the reply. The RF ASIC has a register which is set whenever the MUT_SUP(PO) is asserted.

During normal operation, MUT_SUP(PO) is monitored during squitters transmissions when the transponder is in an ACTIVE state. If the output was not asserted for 5 consecutive samples, a "3F INTERFAC" error is logged as a TROUBLESHOOT error. The monitor does not operate in STANDBY mode.

During BENCH TEST/BURN-IN TEST operation, MUT_SUP(PO) is monitored during test transmissions. If the output was not asserted for 1 sample, a "BF INTERFAC" error is logged as a BENCH TEST error.

PARAMETER:
NONE (Set to 0).

ERROR LIMITS:
Not Applicable.

REV LTR
P

TCAS BUS COMMUNICATION (42 CHK TCAS) - INSTALL ERROR

DESCRIPTION:

The transponder continuously monitors the TCAS->XPDR ARINC 429 data bus to insure that valid data is being received. If no valid data is received for 5 seconds, a "42 CHK TCAS" error is logged as an INSTALL ERROR. The monitor is only enabled when the TCAS INSTALLED strap is set, and the transponder is in "TA ONLY" or "TA/RA" operational mode.

PARAMETER:
NONE (Set to 0).

ERROR LIMITS:
Not Applicable.

DLP A/B BUS COMMUNICATION (43 CHK DLPA) - INSTALL ERROR

DESCRIPTION:

The transponder continuously monitors the DLP_A/B->XPDR ARINC 429 data bus to insure that valid data is being received. If no valid data is received for 5 seconds, a "43 CHK DLPA" error is logged as an INSTALL ERROR. The monitor is only enabled when the DLP INSTALLED strap is set.

PARAMETER:
NONE (Set to 0).

ERROR LIMITS:
Not Applicable.

DLP C/D BUS COMMUNICATION (44 CHK DLPC) - INSTALL ERROR

DESCRIPTION:

The transponder continuously monitors the DLP_C/D->XPDR ARINC 429 data bus to insure that valid data is being received. If no valid data is received for 5 seconds, a "44 CHK DLPC" error is logged as an INSTALL ERROR. The monitor is only enabled when the DLP INSTALLED strap is set.

PARAMETER:
NONE (Set to 0).

ERROR LIMITS:
Not Applicable.

REV LTR
P

ADC1 TO XPDR BUS COMMUNICATION (45 CHK ADC1) - INSTALL ERROR

DESCRIPTION:

The transponder continuously monitors the ADC1->XPDR ARINC 429 data bus to insure that valid altitude data is being received. If no valid data is received for 5 seconds, a "45 CHK ADC1" error is logged as an INSTALL ERROR. The monitor is only enabled when the system is configured for ARINC 429 or ARINC 575 air data, and ADC1 altitude source is selected (ALT_SRC_SEL2(NO) discrete is set to OPEN).

PARAMETER:
NONE (Set to 0).

ERROR LIMITS:
Not Applicable.

ADC2 TO XPDR BUS COMMUNICATION (46 CHK ADC2) - INSTALL ERROR

DESCRIPTION:

The transponder continuously monitors the ADC2->XPDR ARINC 429 data bus to insure that valid altitude data is being received. If no valid data is received for 5 seconds, a "46 CHK ADC2" error is logged as an INSTALL ERROR. The monitor is only enabled when the system is configured for ARINC 429 or ARINC 575 air data, and ADC2 altitude source is selected (ALT_SRC_SEL2(NO) discrete is set to GROUND).

PARAMETER:
NONE (Set to 0).

ERROR LIMITS:
Not Applicable.

CTL1 TO XPDR BUS COMMUNICATION (47 CHK CTL1) - INSTALL ERROR (XS-854 STAND-ALONE ONLY)

DESCRIPTION:

The transponder continuously monitors the CTL1->XPDR ARINC 429 data bus to insure that valid control data is being received. If no valid data is received for 5 seconds, a "47 CHK CTL1" error is logged as an INSTALL ERROR. The monitor is only enabled when the system is a XS-854 STAND-ALONE transponder system using an ARINC 429 control source, and control source #1 is selected (CTL_SRC_SEL1(NO) is set to GROUND).

PARAMETER:
NONE (Set to 0).

ERROR LIMITS:
Not Applicable.

CTL2 TO XPDR BUS COMMUNICATION (48 CHK CTL2) - INSTALL ERROR (XS-854 STAND-ALONE ONLY)

DESCRIPTION:

The transponder continuously monitors the CTL2->XPDR ARINC 429 data bus to insure that valid control data is being received. If no valid data is received for 5 seconds, a "48 CHK CTL2" error is logged as an INSTALL ERROR. The monitor is only enabled when the system is a XS-854 STAND-ALONE transponder system using an ARINC 429 control source, and control source #2 is selected (CTL_SRC_SEL1(NO) is set to OPEN).

PARAMETER:
NONE (Set to 0).

ERROR LIMITS:
Not Applicable.

DISCRETE OUTPUT OVER-CURRENT MONITORS - INSTALL AND BENCH TEST ERRORS

DESCRIPTION:

Each discrete output contains a over-current monitor which protects the outputs from damage if the outputs are directly shorted to +28V (for NEGATIVE outputs) or GROUND (for POSITIVE outputs). In addition to limiting the current through the transistor outputs, the monitor also indicates an over-current condition to the micro-controller, which turns the outputs OFF to protect the devices. This monitor detects an over-current condition.

During normal operation, if a discrete output is in the ON state and an over-current condition is detected for 5 samples, a INSTALL error is logged.

During BENCH TEST/BURN-IN TEST operation, each discrete output is turned on. If an over-current condition is detected for 1 sample, a BENCH TEST error is logged.

The following error codes are assigned for INSTALL and BENCH TEST errors:

DISCRETE OUTPUT	INSTALL	BENCH TEST
XPDR_VALID(NO)	49 CHK OUTP	C9 INTERFAC
XPDR_VALID(PO)	4A CHK OUTP	CA INTERFAC
XPDR_ACTIVE(NO)	4B CHK OUTP	CB INTERFAC
ALT_VALID(NO)	4C CHK OUTP	CC INTERFAC
RSV_OUTPUT1(NO)	4D CHK OUTP	CD INTERFAC

NOTE: The XS-852A Transponder model (IAC VERSION) only contains one discrete output XPDR_ACTIVE(NO). The other error codes are not used with this model.

PARAMETER:
NONE (Set to 0)

ERROR LIMITS:
Not Applicable.

REV LTR
P

FAN TURN-ON FAILURE (4E CHK FAN) - TROUBLESHOOT ERROR (XS-854 STAND-ALONE ONLY)

DESCRIPTION:

This error is only used with XS-854 STAND-ALONE Transponder modules. The INTERFACE CCA contains circuitry which turns a fan on, and detects if the fan is turning. If the circuitry turns the fan ON, but it does not detect that the fan is turning, a "4E CHK FAN" error is logged as a TROUBLESHOOT error.

PARAMETER:
NONE (Set to 0)

ERROR LIMITS:
Not Applicable.

FAN TURN-OFF FAILURE (4F CHK FAN) - TROUBLESHOOT ERROR (XS-854 STAND-ALONE ONLY)

DESCRIPTION:

This error is only used with XS-854 STAND-ALONE Transponder modules. The INTERFACE CCA contains circuitry which turns a fan on, and detects if the fan is turning. If the circuitry turns the fan OFF, but it does not detect that the fan stops turning, a "4F CHK FAN" error is logged as a TROUBLESHOOT error.

PARAMETER:
NONE (Set to 0)

ERROR LIMITS:
Not Applicable.

INVALID ALTITUDE SOURCE (51 STRAPS) - INSTALL ERROR (XS-852A MODULE ONLY)

DESCRIPTION:

This error is only used with XS-852A Transponder Module (IAC model). If the module is strapped for GILHAM altitude sources, which is an invalid altitude source for this model, a "51 STRAPS" error will be logged as an INSTALL error.

PARAMETER:
NONE (Set to 0)

ERROR LIMITS:
Not Applicable.

REV LTR
P

+28V FILTERED MONITOR (D2 PWR SPLY) - BENCH TEST ERROR

DESCRIPTION:

The +28V FILTERED monitor voltage is monitored during BENCH TEST/BURN-IN TEST operation. A "D2 PWR SPLY" error is logged if it exceeds the limits for 2 consecutive samples.

PARAMETER:
UNSIGNED DIGITS, Units 0.1 VDC.

Voltage on POWER SUPPLY/MODULATOR CCA, XPDR_+28V_FILTRD (U5-13).

NOTE: The parameter is for the voltage prior to the resistor divider which results in the XPDR_+28V_FILTRD signal.

ERROR LIMITS:
<18.0 OR >31.0 VDC is an ERROR condition.

PULSE MOD VOLTAGE DURING RECEIVE (D3 PWR SPLY) BENCH TEST ERROR

DESCRIPTION:

The PULSE MODULATOR (TP_+28V_PULSEMOD) voltage which is generated on the POWER SUPPLY/MODULATOR CCA to modulate the transmitter is monitored by the Analog to Digital converter on the PROCESSOR CCA. During BENCH TEST/BURN-IN TEST operation, the voltage is tested when the PULSE MOD is in the OFF state (0V). If 1 sample is out of limits, a "D3 PWR SPLY" error is logged as a BENCH TEST error.

PARAMETER:
UNSIGNED DIGITS, Units 0.1 Volts.

Voltage on POWER SUPPLY/MODULATOR CCA, TP_+28V_PULSEMOD signal (J3 pin 13).

ERROR LIMITS:
>2.0 Volts is an ERROR condition.

ENVELOPE MOD VOLTAGE DURING RECEIVE (D4 PWR SPLY) BENCH TEST ERROR

DESCRIPTION:

The ENVELOPE MODULATOR (TP_+28V_ENVELOPE) voltage which is generated on the POWER SUPPLY/MODULATOR CCA to bracket the transmitter during a transmission is monitored by the Analog to Digital converter on the PROCESSOR CCA. During BENCH TEST/BURN-IN TEST operation, the voltage is tested when the ENVELOPE MODULATOR is in the OFF state (0V). If 1 sample is out of limits, a "D4 PWR SPLY" error is logged as a BENCH TEST error.

PARAMETER:
UNSIGNED DIGITS, Units 0.1 Volts.

Voltage on POWER SUPPLY/MODULATOR CCA, TP_+28V_ENVELOPE signal (J3 pin 14).

ERROR LIMITS:
>2.0 Volts is an ERROR condition.

REV LTR
P

LOCAL OSCILLATOR SYNTHESIZER UNLOCKED (D5 XMITTER) - BENCH TEST

DESCRIPTION:

The SYNTHESIZER LOCK voltage is an output of the 1090MHz Local Oscillator on the TRANSMITTER CCA, and is an indication of if the synthesizer is locked. The voltage is multiplexed on the POWER SUPPLY/MODULATOR CCA (TP_SYNTH_LOCK), and is monitored by the Analog to Digital converter on the PROCESSOR CCA. During BENCH TEST/BURN-IN TEST operation, the voltage is tested, and if 1 sample is out of limits, a "D5 XMITTER" error is logged as a BENCH TEST error.

PARAMETER:
UNSIGNED DIGITS, Units 0.1 Volts.

Voltage on POWER SUPPLY/MODULATOR CCA, TP_SYNTH_LOCK signal (J3 pin 16).

ERROR LIMITS:
<3.5 OR >5.5 Volts is an ERROR condition.

INITIAL PS VOLTAGE (D6 PWR SPLY) - BENCH TEST

DESCRIPTION:

The INITIAL PS voltage puts voltage on the power supply controller ICs prior to power-supply start-up. The voltage is generated on the POWER SUPPLY/MODULATOR CCA (INITIAL_P.S.), and is monitored by the Analog to Digital converter on the PROCESSOR CCA. During BENCH TEST/BURN-IN TEST operation, the voltage is tested, and a "D6 PWR SPLY" error is logged as a BENCH TEST error if it is out of limits for 2 consecutive samples.

PARAMETER:
UNSIGNED DIGITS, Units 0.1 Volts.

Voltage on POWER SUPPLY/MODULATOR CCA, INITIAL_P.S. signal (U3 pin 5).

NOTE: The parameter is for the voltage prior to the resistor divider which results in the INITIAL_P.S. signal.

ERROR LIMITS:
<10.0 OR >15.0 Volts is an ERROR condition.

PULSE +40V VOLTAGE (D7 PWR SPLY) - BENCH TEST

DESCRIPTION:

The PULSE +40V is used for generating gate switching voltages for the Pulse Modulator circuitry on the POWER SUPPLY/MODULATOR CCA (PULSE_+40V_MON), and is monitored by the Analog to Digital converter on the PROCESSOR CCA. During BENCH TEST/BURN-IN TEST operation, the voltage is tested, and a "D7 PWR SPLY" error is logged as a BENCH TEST error if it is out of limits for 2 consecutive samples.

PARAMETER:
UNSIGNED DIGITS, Units 0.1 Volts.

Voltage on POWER SUPPLY/MODULATOR CCA, PULSE_+40V_MON signal (U3 pin 15).

NOTE: The parameter is for the voltage prior to the resistor divider which results in the PULSE_+40V_MON signal.

ERROR LIMITS:
<35.0 OR >44.0 Volts is an ERROR condition.

ST ENABLE VOLTAGE DURING NORMAL OPERATION (58 PWR SPLY) - BENCH TEST

DESCRIPTION:

The ST ENABLE voltage monitors the power which is applied to the self-test oscillator circuitry on the POWER SUPPLY/MODULATOR CCA (ST_ENABLE_MON), and is read by the Analog to Digital converter on the PROCESSOR CCA. During BENCH TEST/BURN-IN TEST operation when power is NOT applied to the self-test oscillator circuitry (Normal operation), the voltage is tested, and if 1 sample is out of limits, a "58 PWR SPLY" error is logged as a BENCH TEST error.

PARAMETER:
UNSIGNED DIGITS, Units 0.1 Volts.

Voltage on POWER SUPPLY/MODULATOR CCA, ST_ENABLE_MON signal (U3 pin 13).

ERROR LIMITS:
>1.0 Volts is an ERROR condition.

ST ENABLE VOLTAGE DURING TEST OPERATION (D8 PWR SPLY) - BENCH TEST

DESCRIPTION:

The ST ENABLE voltage monitors the power which is applied to the self-test oscillator circuitry on the POWER SUPPLY/MODULATOR CCA (ST_ENABLE_MON), and is read by the Analog to Digital converter on the PROCESSOR CCA. During BENCH TEST/BURN-IN TEST operation when power IS applied to the self-test oscillator circuitry (RF self-test operation), the voltage is tested, and if 1 sample is out of limits, a "D8 PWR SPLY" error is logged as a BENCH TEST error.

PARAMETER:
UNSIGNED DIGITS, Units 0.1 Volts.

Voltage on POWER SUPPLY/MODULATOR CCA, ST_ENABLE_MON signal (U3 pin 13).

ERROR LIMITS:
<4.0 OR >5.5 Volts is an ERROR condition.

BOOST CURRENT VOLTAGE (D9 PWR SPLY) - BENCH TEST

DESCRIPTION:

The BOOST CURRENT voltage monitors current in the primary transistor of the +60V Boost Power Supply on the POWER SUPPLY/MODULATOR CCA (BOOST_CURRENT), and is read by the Analog to Digital converter on the PROCESSOR CCA. During BENCH TEST/BURN-IN TEST operation the voltage is tested, and if 1 sample is out of limits, a "D9 PWR SPLY" error is logged as a BENCH TEST error.

PARAMETER:
UNSIGNED DIGITS, Units 0.1 Volts.

Voltage on POWER SUPPLY/MODULATOR CCA, BOOST_CURRENT signal (U3 pin 14).

ERROR LIMITS:
>2.1 Volts is an ERROR condition.

ARINC I/O EXTERNAL LOOP-BACK (E0 INTERFAC) - BENCH TEST

DESCRIPTION:

This test is used to perform a wrap-around test of ARINC Bus Inputs and Outputs. The error is only logged when the BURN-IN TEST mode is selected from the RTIU. In order for the test to work correctly, a harness must be used which connects the appropriate ARINC outputs to inputs. When selected, the test outputs ARINC 429 words on the XPDR->TCAS, XPDR->DLP_A/B and XPDR->DLP_C/D busses, and checks to see that the labels were received on the TCAS->XPDR, ADC1->XPDR, DLP_A/B->XPDR, ADC2->XPDR, and DLP_C/D->XPDR bus inputs as is appropriate. If the labels were not received a (E0 INTERFAC) error is logged as a BENCH TEST error. The failure must occur for 2 consecutive samples for the error to be logged.

PARAMETER:
UNSIGNED DIGITS

Digit #0: XPDR->TCAS to TCAS->XPDR 0=pass / 1=fail
Digit #1: XPDR->TCAS to ADC1->XPDR 0=pass / 1=fail
Digit #2: XPDR->DLP_A/B to DLP_A/B->XPDR 0=pass / 1=fail
Digit #3: XPDR->DLP_A/B to ADC2->XPDR 0=pass / 1=fail
Digit #4: XPDR->DLP_C/D to DLP_C/D->XPDR 0=pass / 1=fail

ERROR LIMITS:
Not Applicable.

ARINC I/O EXTERNAL LOOP-BACK (E1 INTERFAC) - BENCH TEST (XS-852 ONLY)

DESCRIPTION:

This test is used to perform a wrap-around test of ARINC Bus Inputs and Outputs, and is only used for XS-852 modules. The error is only logged when the BURN-IN TEST mode is selected from the RTIU. In order for the test to work correctly, a harness must be used which connects the appropriate ARINC outputs to inputs. When selected, the test outputs ARINC 429 words on the XPDR->RSV1, and XPDR->RSV2 busses, and checks to see that the labels were received on the RSV1->XPDR, CTL1->XPDR, FMS->XPDR, RSV2->XPDR, and CTL2->XPDR bus inputs as is appropriate. If the labels were not received a (E1 INTERFAC) error is logged as a BENCH TEST error. The failure must occur for 2 consecutive samples for the error to be logged.

PARAMETER:
UNSIGNED DIGITS

Digit #0: XPDR->RSV1 to RSV1->XPDR	0=pass / 1=fail
Digit #1: XPDR->RSV1 to CTL1->XPDR	0=pass / 1=fail
Digit #2: XPDR->RSV1 to FMS->XPDR	0=pass / 1=fail
Digit #3: XPDR->RSV2 to RSV2->XPDR	0=pass / 1=fail
Digit #4: XPDR->RSV2 to CTL2->XPDR	0=pass / 1=fail

ERROR LIMITS:
Not Applicable.

DISCRETE I/O PORT EXTERNAL LOOP-BACK (E2 to E9 INTERFAC) - BENCH TEST

DESCRIPTION:

This test is used to perform a wrap-around test of Discrete Outputs to Discrete Inputs. The error is only logged when the BURN-IN TEST mode is selected from the RTIU. In order for the test to work correctly, a harness must be used which connects the appropriate Discrete outputs to inputs. When selected, the test outputs a "LOW" and "HIGH" level on each discrete output, and verifies that the discrete inputs which are connected to the output read the appropriate signal level. If the discrete inputs do not read the correct level, a error is logged as a (Ex INTERFAC) BENCH TEST error. The failure must occur for 2 consecutive samples for the error to be logged.

PARAMETER:
UNSIGNED DIGITS, where each digit has the following definition:

0 = Test Passes
1 = Input should have read a "LOW", but read a "HIGH".
2 = Input should have read a "HIGH", but read a "LOW"
3 = Input failed during both "LOW" and "HIGH" tests.

REV LTR
P

The following parameters for error codes E2 to E9 are defined as follows:

E2 - DISCRETE I/O PORT #0 (XS-852 ONLY)

Digit #0: ALT_VALID(NO)	to	ENC_ALT1_A2(NO)
Digit #1: XPDR_ACTIVE(NO)	to	ENC_ALT1_A1(NO)
Digit #2: RSV_OUTPUT_1(NO)	to	ENC_ALT1_D4(NO)
Digit #3: XPDR_VALID(NO)	to	ENC_ALT1_D2(NO)
Digit #4: unused.		

E2 - DISCRETE I/O PORT #0 (XS-852A ONLY)

Digit #0: XPDR_ACTIVE(NO)	to	ALT_SRC_SEL2(NO)
Digit #1: XPDR_ACTIVE(NO)	to	RSV_INPUT(NO)
Digit #2-#4: unused.		

E3 - DISCRETE I/O PORT #0 (XS-852 ONLY)

Digit #0: XPDR_ACTIVE(NO)	to	ENC_ALT1_B4(NO)
Digit #1: RSV_OUTPUT_1(NO)	to	ENC_ALT1_B2(NO)
Digit #2: XPDR_VALID(NO)	to	ENC_ALT1_B1(NO)
Digit #3: XPDR_VALID(PO)	to	ENC_ALT1_A4(NO)
Digit #4: unused.		

E4 - DISCRETE I/O PORT #1 (XS-852 ONLY)

Digit #0: RSV_OUTPUT_1(NO)	to	ALT_SRC_SEL2(NO)
Digit #1: XPDR_VALID(NO)	to	CTL_SRC_SEL1(NO)
Digit #2: XPDR_VALID(PO)	to	XPDR_STANDBY(NO)
Digit #3: ALT_VALID(NO)	to	SQUAT_SWITCH_2(NO)
Digit #4: unused.		

E5 - DISCRETE I/O PORT #1 (XS-852 ONLY)

Digit #0: XPDR_VALID(NO)	to	ENC_ALT1_C4(NO)
Digit #1: XPDR_VALID(PO)	to	ENC_ALT1_C2(NO)
Digit #2: ALT_VALID(NO)	to	ENC_ALT1_C1(NO)
Digit #3: XPDR_ACTIVE(NO)	to	ALT_COMP_ENA(NO)
Digit #4: unused.		

E6 - DISCRETE I/O PORT #2 (XS-852 ONLY)

Digit #0: XPDR_VALID(PO)	to	ENC_ALT2_A2(NO)
Digit #1: ALT_VALID(NO)	to	ENC_ALT2_A1(NO)
Digit #2: XPDR_ACTIVE(NO)	to	ENC_ALT2_D4(NO)
Digit #3: RSV_OUTPUT_1(NO)	to	ENC_ALT2_D2(NO)
Digit #4: unused.		

REV LTR
P

E7 - DISCRETE I/O PORT #2 (XS-852 ONLY)

Digit #0: ALT_VALID(NO)	to	ENC_ALT2_B4(NO)
Digit #1: XPDR_ACTIVE(NO)	to	ENC_ALT2_B2(NO)
Digit #2: RSV_OUTPUT_1(NO)	to	ENC_ALT2_B1(NO)
Digit #3: XPDR_VALID(NO)	to	ENC_ALT2_A4(NO)

Digit #4: unused.

E8 - DISCRETE I/O PORT #3 (XS-852 ONLY)

Digit #0: XPDR_ACTIVE(NO)	to	RSV_INPUT_2(NO)
Digit #1: RSV_OUTPUT_1(NO)	to	RSV_INPUT_3(NO)
Digit #2: XPDR_VALID(NO)	to	RSV_INPUT_4(NO)
Digit #3: XPDR_VALID(PO)	to	SQUAT_SWITCH_1(NO)

Digit #4: unused.

E9 - DISCRETE I/O PORT #3 (XS-852 ONLY)

Digit #0: RSV_OUTPUT_1(NO)	to	ENC_ALT2_C4(NO)
Digit #1: XPDR_VALID(NO)	to	ENC_ALT2_C2(NO)
Digit #2: XPDR_VALID(PO)	to	ENC_ALT2_C1(NO)
Digit #3: ALT_VALID(NO)	to	RSV_INPUT_1(NO)

Digit #4: unused.

ERROR LIMITS:

Not Applicable.