RADIO TEST REPORT

The device described below is tested by Dongguan Nore Testing Center Co., Ltd. to determine the maximum emission levels emanating from the device, the severe levels which the device can endure and E.U.T.'s performance criterion. The test results, data evaluation, test procedures, and equipment of configurations shown in this report were made in accordance with the procedures in ANSI C63.10(2013).

Applicant	:	Rosslare Enterprises Limited
Address	:	Room 905., 12 Wang Tai Road, Kowloon Bay, Kowloon, Hong Kong
Manufacturer/Factory	:	Rosslare Electronics (Shenzhen) Ltd.
Address	:	Block 2, No. A-1 Baiwangxin Indurstrial Park, XiLi Town, Shenzhen, China
E.U.T.	:	Anti-Vandal Standalone Controllers
Brand Name	:	ROSSLARE SECURITY PRODUCTS
Model No.	:	AC-Q42HB, AC-Q42SB, AC-Q41SB, AC-Q41HB, AC-Q41SC, AC-Q41HP (For model difference refer to section 1.1)
FCC ID	:	GCD-ACQ4XXB
Measurement Standard	:	FCC PART 15 Subpart C
Date of Receiver	:	September 07, 2018
Date of Test	:	September 07, 2018 to November 10, 2018
Date of Report	:	November 10, 2018

This Test Report is Issued Under the Authority of :

Prepared by	Approved & Authorized Signer
Sundiy jiang / Engineer	Iori Fan / Authorized Signatory

Dongguan Nore Testing Center Co., Ltd.

This test report is for the customer shown above and their specific product only. This report applies to above tested sample only and shall not be reproduced in part without written approval of Dongguan Nore Testing Center Co., Ltd.

TEL: +86-769-22022444 FAX: +86-769-22022799 Web: www.ntc-c.com
Address: Building D, Gaosheng Science & Technology Park, Zhouxi Longxi Road, Nancheng District, Dongguan City, Guangdong, China

Table of Contents

1. GENERAL INFORMATION 4

1.1 PRODUCT DESCRIPTION FOR EQUIPMENT UNDER TEST 4
1.2 RELATED SUBMITTAL(S) / GRANT (S) 6
1.3 TEST METHODOLOGY 6
1.4 EQUIPMENT MODIFICATIONS 6
1.5 SUPPORT DEVICE 6
1.6 TEST FACILITY AND LOCATION 7
1.7 SUMMARY OF TEST RESULTS 7

2. SYSTEM TEST CONFIGURATION 8

2.1 EUT CONFIGURATION 8
2.2 PECIAL ACCESSORIES 8
2.3 DESCRIPTION OF TEST MODES 8
2.4 EUT EXERCISE 8

3. CONDUCTED EMISSIONS TEST 9

3.1 TEST SET-UP (BLOCK DIAGRAM OF CONFIGURATION) 9
3.2 TEST CONDITION 9
3.3 MEASUREMENT RESULTS 9

4. RADIATED EMISSION TEST 10

4.1 TEST SET-UP (BLOCK DIAGRAM OF CONFIGURATION) 10
4.2 MEASUREMENT PROCEDURE 11
4.3 LIMIT 12
4.4 MEASUREMENT RESULTS 12

5. 20DB BANDWIDTH 19

5.1 MEASUREMENT PROCEDURE 19
5.2 TEST SET-UP (BLOCK DIAGRAM OF CONFIGURATION) 19
5.3 MEASUREMENT RESULTS 19

6. ANTENNA APPLICATION 21

6.1 ANTENNA REQUIREMENT 21
6.2 MEASUREMENT RESULTS 21

7. TEST EQUIPMENT LIST 22

Revision History of This Test Report

Report Number	Description	Issued Date
NTC1809056FV00	Initial Issue	2018-11-10

1. GENERAL INFORMATION

1.1 Product Description for Equipment under Test

Product name : Anti-Vandal Standalone Controllers

Main model : AC-Q42HB

Additional model : AC-Q42SB, AC-Q41SB, AC-Q41HB, AC-Q41SC, AC-Q41HP

Model different : Those models have the same circuit schematic, construction, PCB Layout and critical components. The difference is model name, product name, operating mode and the method of wiring only due to trading purpose.

Model No.	The method of wiring	Operating mode
AC-Q42HB	Pre-wired cable	PIN & PROX
AC-Q42SB	Terminal block	
AC-Q41SB	Pre-wired cable	PIN
AC-Q41HB	Terminal block	
AC-Q41SC	Pre-wired cable	
AC-Q41HP	Terminal block	

Brand name : ROSSLARE SECURITY PRODUCTS

Power Supply : DC12-24V

Test voltage : DC 12V, DC24V
(Only the worst case was recorded in this report)

Adapter : N/A

Cable : DC cable Less than 3 m (Declaration by Manufacturer)

Note : According to the model difference, all tests were performed on model AC-Q42HB.

Technical Specification:

Product description	:	125KHz RFID Reader
Location for use	:	Indoors/Outdoors
Declared Frequency Range	:	125KHz
Type of Modulation	:	ASK
Type of Antenna	:	integral antenna
Antenna Gain	:	0 dBi

1.2 Related Submittal(s) / Grant (s)

This submittal(s) (test report) is intended for FCC ID: **GCD-ACQ4XXB** filing to comply with FCC Part 15 (2017), Subpart C Rule.

1.3 Test Methodology

Radiated emission measurements were performed according to the procedures in ANSI C63.10 (2013). Radiated emission measurement was performed in semi-anechoic chamber. For radiated emission measurement, preliminary scans were performed in the semi-anechoic chamber only to determine the worst case modes. All radiated tests were performed at an antenna to EUT distance of 3 meters.

1.4 Equipment Modifications

Not available for this EUT intended for grant.

1.5 Support Device

RFID Card : Provided by the Manufacturer

1.6 Test Facility and Location

Site Description

EMC Lab : Listed by CNAS, August 13, 2018
The certificate is valid until August 13, 2024
The Laboratory has been assessed and proved to be in compliance with CNAS/CL01
The Certificate Registration Number is L5795.

Listed by A2LA, November 01, 2017
The certificate is valid until December 31, 2019
The Laboratory has been assessed and proved to be in compliance with ISO17025
The Certificate Registration Number is 4429.01

Listed by FCC, November 06, 2017
The Designation Number is CN1214
Test Firm Registration Number: 907417

Listed by Industry Canada, June 08, 2017
The Certificate Registration Number. Is 46405-9743

Name of Firm : Dongguan Nore Testing Center Co., Ltd.
(Dongguan NTC Co., Ltd.)

Site Location : Building D, Gaosheng Science & Technology Park, Zhouxi Longxi Road, Nancheng District, Dongguan City, Guangdong Province, China

1.7 Summary of Test Results

FCC Rules	Description Of Test	Uncertainty	Result
§15.35	20dB Bandwidth	±1.42 x10^{-4}%	Compliant
§15.207 (a)	AC Power Conducted Emission	±1.06dB	Not Compliant*
§15.209	Radiated Emission	±3.70dB	Compliant

Note: This product is powered by DC 12-24V, will not connect to the AC mains, Therefore the AC Power Conducted Emission item is not applicable.

2. System Test Configuration

2.1 EUT Configuration

The EUT configuration for testing is installed on RF field strength measurement to meet the Commissions requirement and operating in a manner which intends to maximize its emission characteristics in a continuous normal application.

2.2 Pecial Accessories

Not available for this EUT intended for grant.

2.3 Description of test modes

The EUT has been tested under operating condition. Test program used to control the EUT for staying in continuous transmitting and normal mode is programmed.

2.4 EUT Exercise

The EUT was operated in the engineering mode to fix the Tx frequency that was for the purpose of the measurements.

3. Conducted Emissions Test

3.1 Test SET-UP (Block Diagram of Configuration)

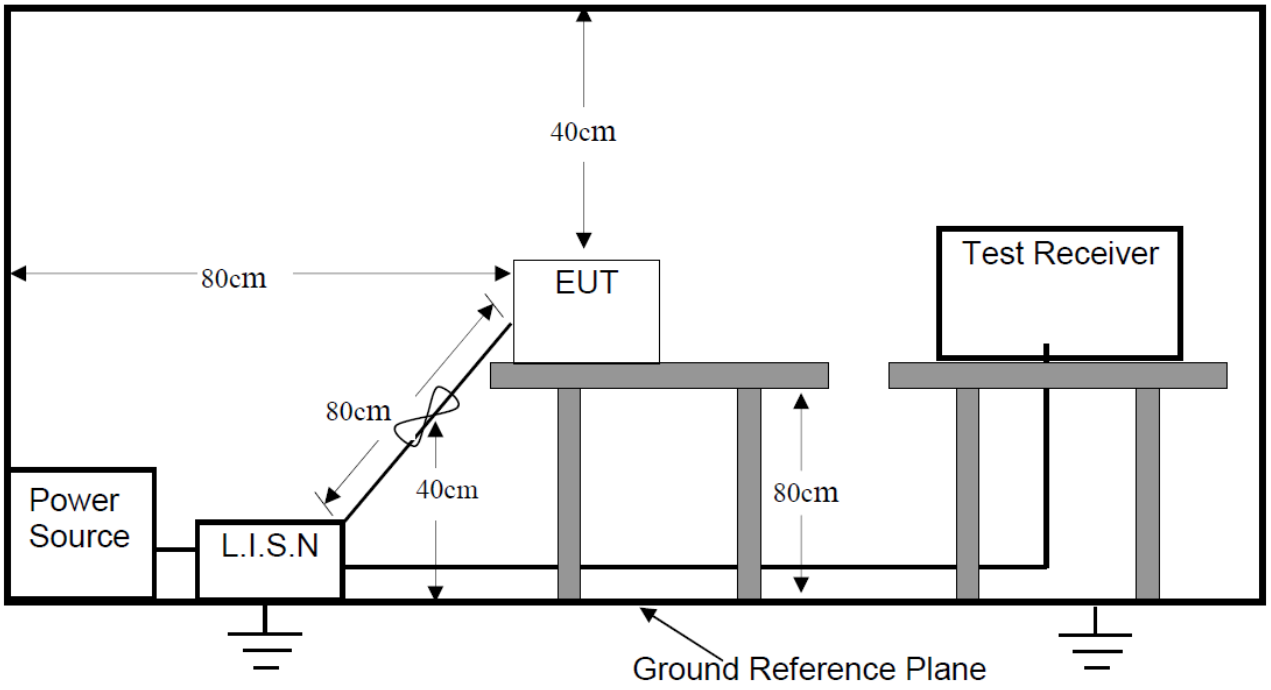

3.2 Test Condition

Test Requirement: FCC Part 15.207

Frequency Range: 150KHz ~ 30MHz

Detector: RBW 9KHz, VBW 30KHz

Operation Mode: TX, Standby

3.3 Measurement Results

Not applicable

4. Radiated Emission Test

4.1 Test SET-UP (Block Diagram of Configuration)

4.1.1 Radiated Emission Test Set-Up, Frequency below 30MHz

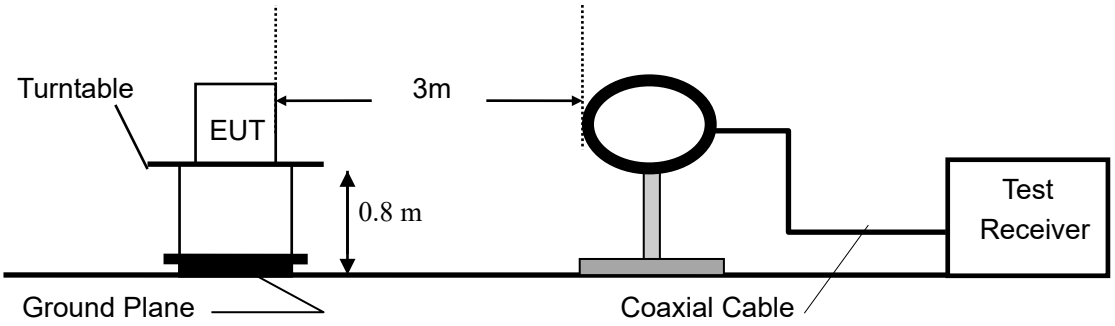

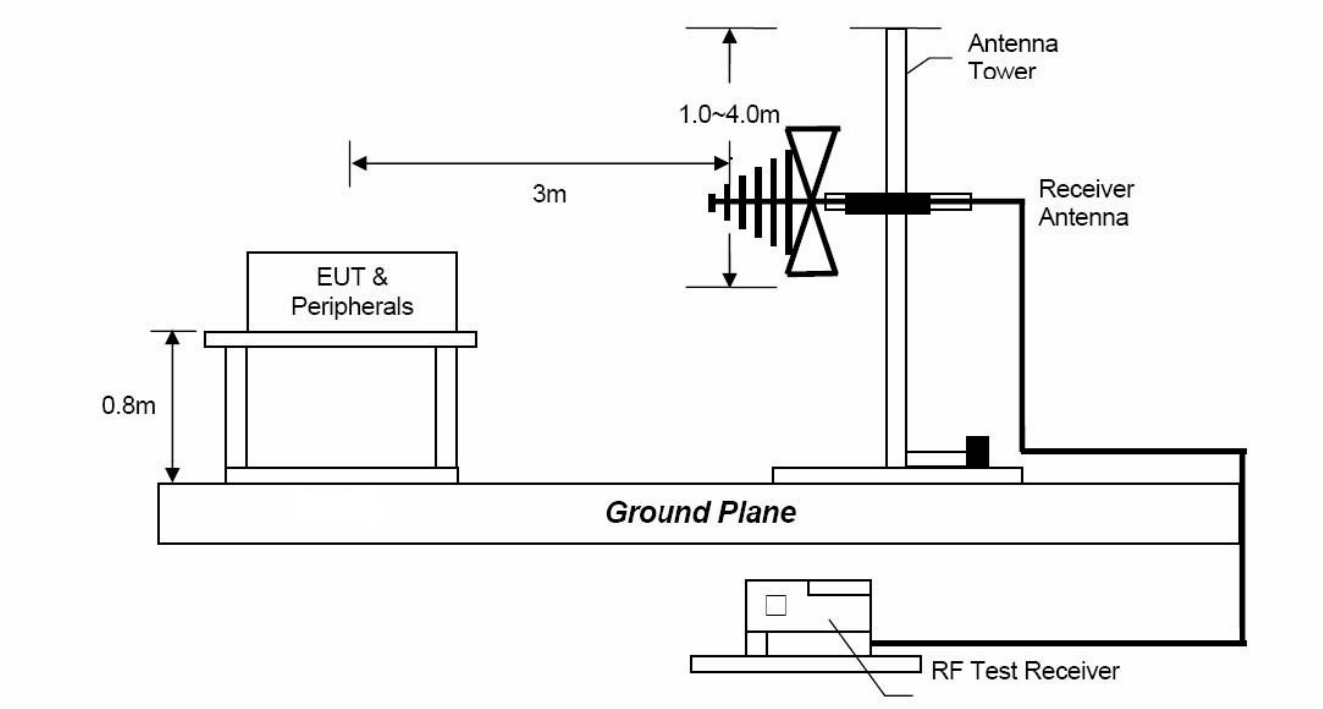

4.1.2 Radiated Emission Test Set-Up, Frequency above 1GHz

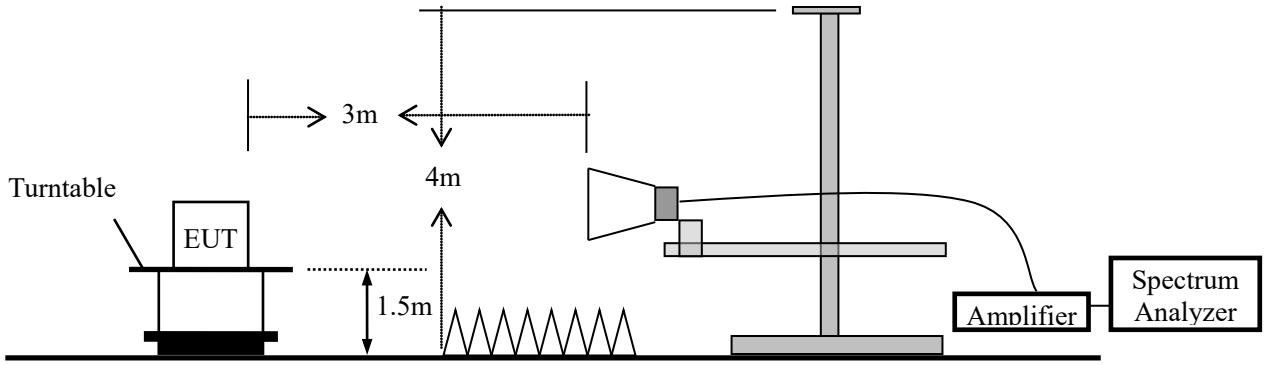

4.2 Measurement Procedure

a. Blow 1GHz, the EUT was placed on the top of a rotating table 0.8 meters above the ground at a 3 meter semi- anechoic chamber room.
b. For the radiated emission test above 1GHz:
   The EUT was placed on the top of a rotating table 1.5 meters above the ground at a 3 meter full anechoic chamber room. The table was rotated 360 degrees to determine the position of the highest radiation. Place the measurement antenna away from each area of the EUT determined to be a source of emissions at the specified measurement distance, while keeping the measurement antenna aimed at the source of emissions at each frequency of significant emissions, with polarization oriented for maximum response. The measurement antenna may have to be higher or lower than the EUT, depending on the radiation pattern of the emission and staying aimed at the emission source for receiving the maximum signal. The final measurement antenna elevation shall be that which maximizes the emissions. The measurement antenna elevation for maximum emissions shall be restricted to a range of heights of from 1 m to 4 m above the ground or reference ground plane.
c. The EUT was set 3 meters away from the interference-receiving antenna, which was mounted on the top of a variable-height antenna tower.
d. The height of antenna is varied from one meter to four meters above the ground to determine the maximum value of the field strength. Both horizontal and vertical polarizations of the antenna are set to make the measurement.
e. For each suspected emission, the EUT was arranged to its worst case and then the antenna was tuned to heights from 1 meter to 4 meters and the rotatable table was turned from 0 degrees to 360 degrees to find the maximum reading. The test-receiver system was set to peak detect function and specified bandwidth with maximum hold mode.
f. A Quasi-peak measurement was then made for that frequency point for below 1GHz test. PK and AV for above 1GHz emission test.

During the radiated emission test, the spectrum analyzer was set with the following configurations:

Frequency Band (MHz)	Level	Resolution Bandwidth	Video Bandwidth
30 to 1000	QP	120 kHz	300 kHz
Above 1000	Peak	1 MHz	3 MHz
	Average	1 MHz	10 Hz

4.3 Limit

Frequency range MHz	Distance Meters	Field Strengths Limit (15.209) μV/m
0.009 ~ 0.490	300	2400/F(kHz)
0.490 ~ 1.705	30	24000/F(kHz)
1.705 ~ 30	30	30
30 ~ 88	3	100
88 ~ 216	3	150
216 ~ 960	3	200
Above 960	3	500

Remark : (1) Emission level (dB)μV = 20 log Emission level μV/m

(2) The smaller limit shall apply at the cross point between two frequency bands.

(3) As shown in 15.35(b), for frequencies above 1000MHz, the field strength limits are based on average detector, however, the peak field strength of any emission shall not exceed the maximum permitted average limits, specified above by more than 20dB under any condition of modulation.

(4) The frequency range scanned is from the lowest radio frequency signal generated in the device which is greater than 9 kHz to the tenth harmonic of the highest fundamental frequency or 40 GHz, whichever is lower.

4.4 Measurement Results

Please refer to following plots of the worst case: TX

Dongguan NTC Co., Ltd.
Tel:+86-769-22022444 Fax:+86-769-22022799
Web: Http://www.ntc-c.com

Radiated Emission Measurement

File :AC-Q42HB Data :#17 Date: 2018-11-9 Time: 9:12:19

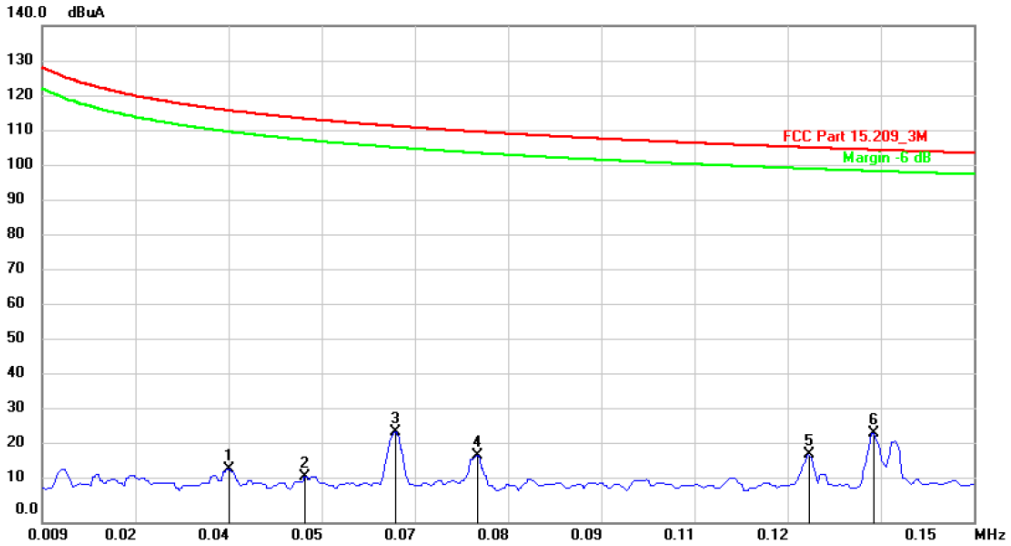

Site: 3m Chamber
Limit: FCC Part 15.209_3M
EUT: See Note
M/N: AC-Q42HB
Mode: TX
Note: Anti-Vandal Standalone Controllers

Polarization: ***Vertical***
Power: DC12V
Distance:

Temperature: 26
Humidity: 60 %

No.	Mk.	Freq.	Reading Level	Correct Factor	Measure-ment	Limit	Over		Antenna Height	Table Degree	
		MHz	dBuV	dB/m	dBuA	dBuA	dB	Detector	cm	degree	Comment
1		0.0371	-17.35	32.32	14.97	116.09	-101.12	peak			
2		0.0487	-19.72	32.37	12.65	113.74	-101.09	peak			
3		0.0623	-6.92	32.30	25.38	111.61	-86.23	peak			
4		0.0748	-13.53	32.30	18.77	110.03	-91.26	peak			
5		0.1250	-13.34	32.30	18.96	105.60	-86.64	peak			
6	*	0.1348	-7.20	32.30	25.10	104.95	-79.85	peak			

*:Maximum data x:Over limit !:over margin 〈Reference Only

Note: When the PEAK level was below the limit of AV level, the AV levels were considered to Meet the requirements.

Dongguan NTC Co., Ltd.
Tel:+86-769-22022444 Fax:+86-769-22022799
Web: Http://www.ntc-c.com

Radiated Emission Measurement

File :AC-Q42HB Data :#18 Date: 2018-11-9 Time: 9:20:46

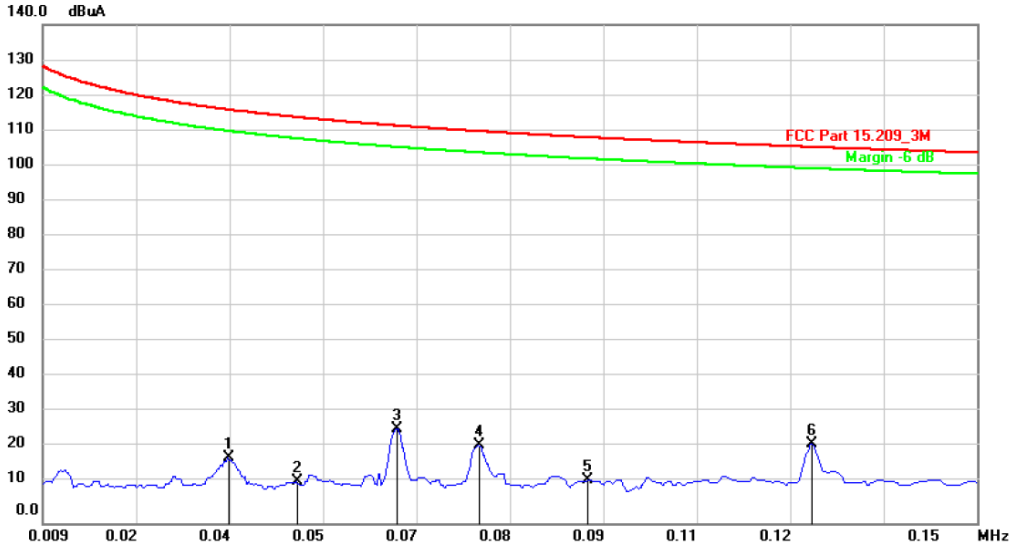

Site: 3m Chamber
Limit: FCC Part 15.209_3M
EUT: See Note
M/N: AC-Q42HB
Mode: TX
Note: Anti-Vandal Standalone Controllers

Polarization: ***Horizontal***
Power: DC12V
Distance:

Temperature: 26
Humidity: 60 %

No.	Mk.	Freq.	Reading Level	Correct Factor	Measure-ment	Limit	Over		Antenna Height	Table Degree	
		MHz	dBuV	dB/m	dBuA	dBuA	dB	Detector	cm	degree	Comment
1		0.0369	-13.85	32.32	18.47	116.14	-97.67	peak			
2		0.0473	-20.66	32.37	11.71	113.99	-102.28	peak			
3		0.0623	-5.98	32.30	26.32	111.61	-85.29	peak			
4		0.0748	-10.53	32.30	21.77	110.03	-88.26	peak			
5		0.0913	-20.15	32.31	12.16	108.31	-96.15	peak			
6	*	0.1250	-9.99	32.30	22.31	105.60	-83.29	peak			

*:Maximum data x:Over limit !:over margin 〈Reference Only

Note: When the PEAK level was below the limit of AV level, the AV levels were considered to Meet the requirements.

Dongguan NTC Co., Ltd.
Tel:+86-769-22022444 Fax:+86-769-22022799
Web: Http://www.ntc-c.com

Radiated Emission Measurement

File :AC-Q42HB Data :#19 Date: 2018-11-9 Time: 9:28:18

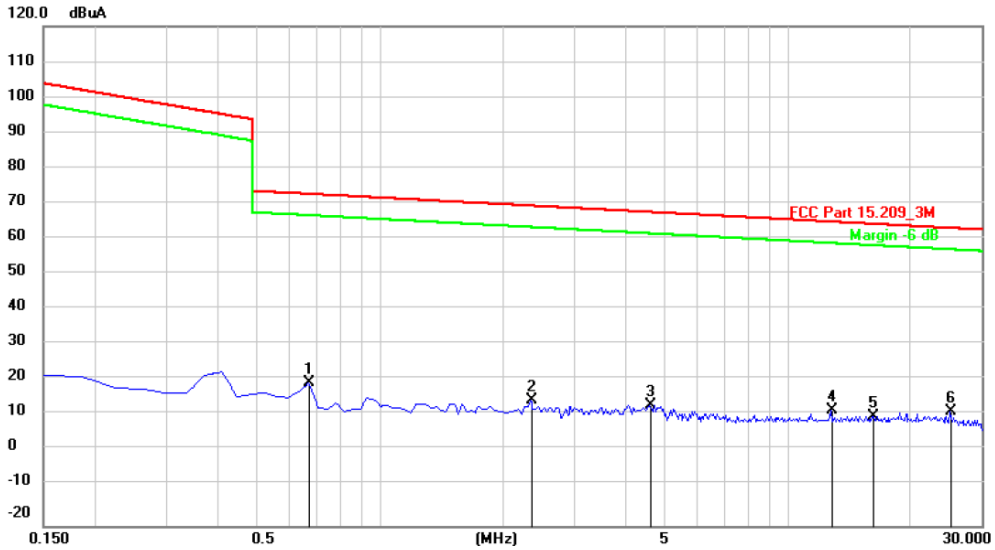

Site: 3m Chamber
Limit: FCC Part 15.209_3M
EUT: See Note
M/N: AC-Q42HB
Mode: TX
Note: Anti-Vandal Standalone Controllers

Polarization: ***Vertical***
Power: DC12V
Distance:

Temperature: 26
Humidity: 60 %

No.	Mk.	Freq.	Reading Level	Correct Factor	Measure-ment	Limit	Over		Antenna Height	Table Degree	
		MHz	dBuV	dB/m	dBuA	dBuA	dB	Detector	cm	degree	Comment
1		0.6722	-12.02	32.20	20.18	72.97	-52.79	peak			
2		2.3513	-16.83	32.17	15.34	69.67	-54.33	peak			
3		4.6275	-18.46	32.22	13.76	67.89	-54.13	peak			
4		12.8361	-19.82	32.33	12.51	65.20	-52.69	peak			
5		16.2684	-21.64	32.32	10.68	64.58	-53.90	peak			
6	*	25.1121	-20.28	32.35	12.07	63.44	-51.37	peak			

*:Maximum data x:Over limit !:over margin 〈Reference Only

Note: When the PEAK level was below the limit of AV level, the AV levels were considered to Meet the requirements.

Dongguan NTC Co., Ltd.
Tel:+86-769-22022444 Fax:+86-769-22022799
Web: Http://www.ntc-c.com

Radiated Emission Measurement

File :AC-Q42HB Data :#20 Date: 2018-11-9 Time: 9:36:13

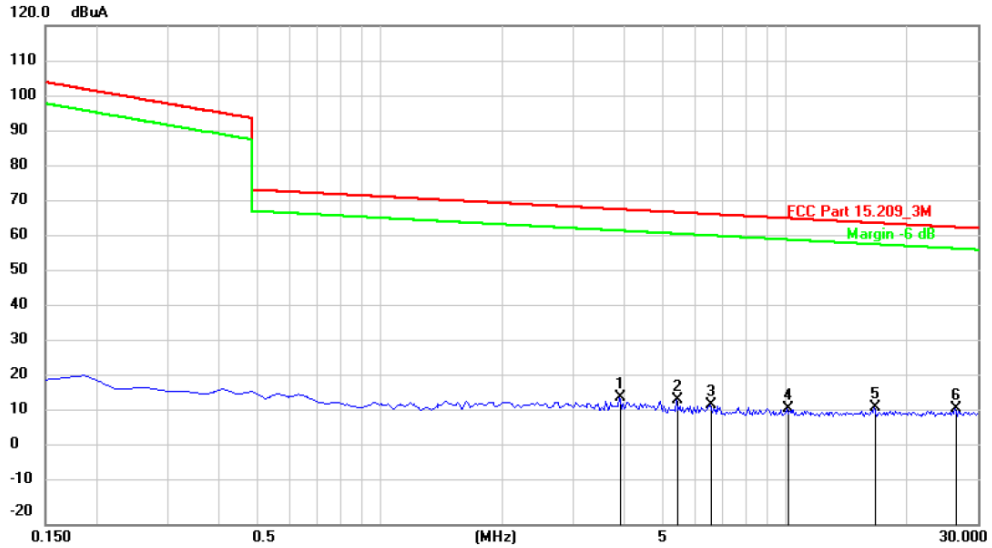

Site: 3m Chamber
Limit: FCC Part 15.209_3M
EUT: See Note
M/N: AC-Q42HB
Mode: TX
Note: Anti-Vandal Standalone Controllers

Polarization: ***Horizontal***
Power: DC12V
Distance:

Temperature: 26
Humidity: 60 %

No.	Mk.	Freq.	Reading Level	Correct Factor	Measure-ment	Limit	Over		Antenna Height	Table Degree	
		MHz	dBuV	dB/m	dBuA	dBuA	dB	Detector	cm	degree	Comment
1		3.9186	-16.52	32.20	15.68	68.33	-52.65	peak			
2		5.4111	-17.52	32.22	14.70	67.48	-52.78	peak			
3		6.5677	-18.71	32.25	13.54	66.97	-53.43	peak			
4		10.1866	-19.96	32.35	12.39	65.81	-53.42	peak			
5		16.6794	-19.66	32.32	12.66	64.52	-51.86	peak			
6	*	26.3429	-19.93	32.37	12.44	63.31	-50.87	peak			

*:Maximum data x:Over limit !:over margin 〈Reference Only

Note: When the PEAK level was below the limit of AV level, the AV levels were considered to Meet the requirements.

Dongguan NTC Co., Ltd.
Tel:+86-769-22022444 Fax:+86-769-22022799
Web: Http://www.ntc-c.com

Radiated Emission Measurement

File :AC-Q42HB Data :#14 Date: 2018-11-6 Time: 11:04:35

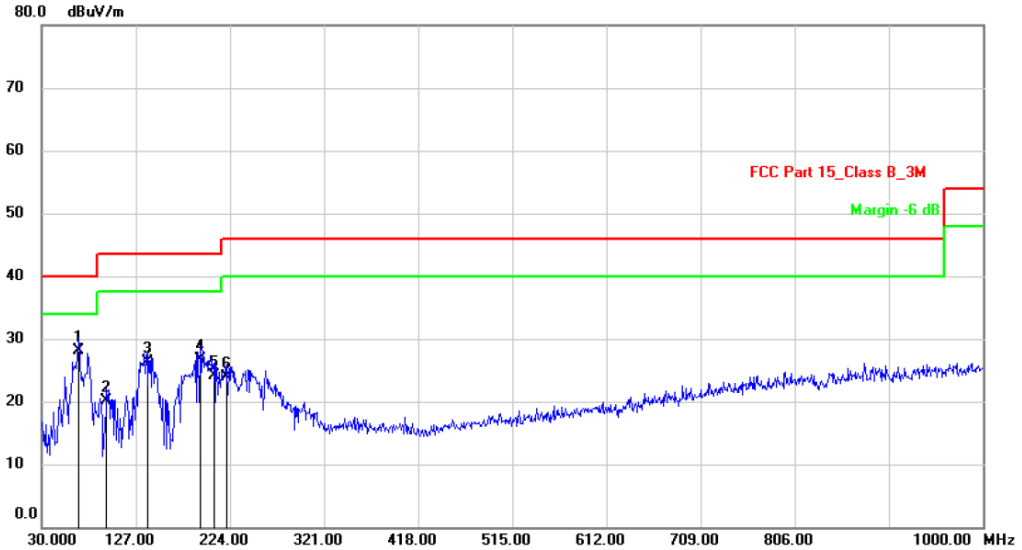

Site: 3m Chamber
Limit: FCC Part 15_Class B_3M
EUT: See Note
M/N: AC-Q42HB
Mode: TX
Note: Anti-Vandal Standalone Controllers

Polarization: ***Vertical***
Power: DC24V
Distance: 3m

Temperature: 26
Humidity: 47 %

No.	Mk.	Freq.	Reading Level	Correct Factor	Measure-ment	Limit	Over		Antenna Height	Table Degree	
		MHz	dBuV	dB/m	dBuV/m	dBuV/m	dB	Detector	cm	degree	Comment
1	*	67.8298	44.78	-16.58	28.20	40.00	-11.80	QP			
2		96.9300	36.02	-15.92	20.10	43.50	-23.40	QP			
3		138.6399	44.83	-18.53	26.30	43.50	-17.20	QP			
4		193.9299	43.25	-16.45	26.80	43.50	-16.70	QP			
5		207.5098	40.39	-16.29	24.10	43.50	-19.40	QP			
6		220.1200	39.87	-15.97	23.90	46.00	-22.10	QP			

*:Maximum data x:Over limit !:over margin 〈Reference Only

Dongguan NTC Co., Ltd.
Tel:+86-769-22022444 Fax:+86-769-22022799
Web: Http://www.ntc-c.com

Radiated Emission Measurement

File :AC-Q42HB Data :#13 Date: 2018-11-6 Time: 10:56:12

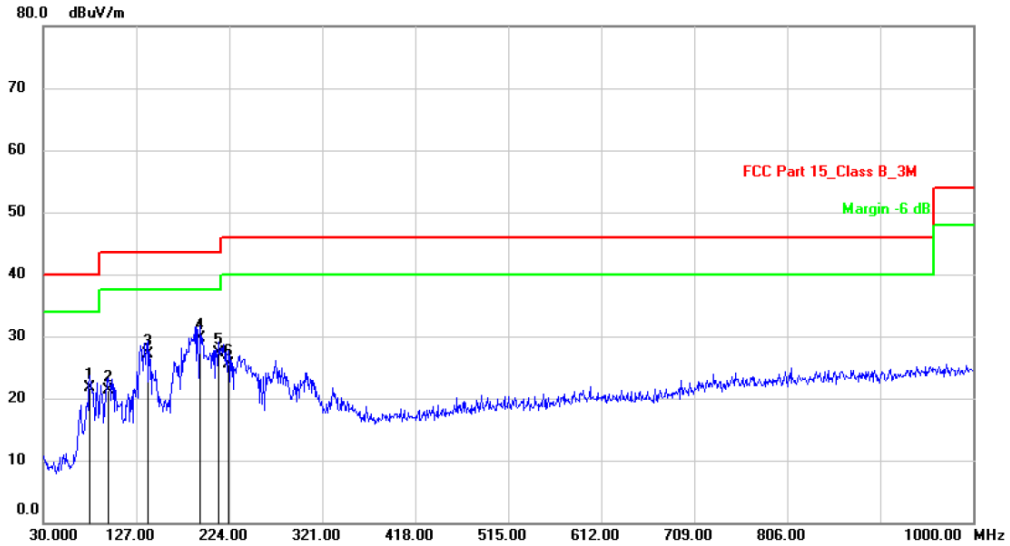

Site: 3m Chamber
Limit: FCC Part 15_Class B_3M
EUT: See Note
M/N: AC-Q42HB
Mode: TX
Note: Anti-Vandal Standalone Controllers

Polarization: ***Horizontal***
Power: DC24V
Distance: 3m

Temperature: 26
Humidity: 47 %

No.	Mk.	Freq.	Reading Level	Correct Factor	Measure-ment	Limit	Over		Antenna Height	Table Degree	
		MHz	dBuV	dB/m	dBuV/m	dBuV/m	dB	Detector	cm	degree	Comment
1		78.5000	39.39	-17.59	21.80	40.00	-18.20	QP			
2		97.9000	33.70	-12.40	21.30	43.50	-22.20	QP			
3		138.6399	42.73	-15.53	27.20	43.50	-16.30	QP			
4	*	193.9299	43.15	-13.45	29.70	43.50	-13.80	QP			
5		212.3600	40.49	-13.19	27.30	43.50	-16.20	QP			
6		223.0300	38.41	-12.81	25.60	46.00	-20.40	QP			

*:Maximum data x:Over limit !:over margin 〈Reference Only

5. 20dB Bandwidth

5.1 Measurement Procedure

Maximum 20dB RF Bandwidth, FCC Rule 15.35:

The antenna port of the EUT was connected to the input of a spectrum analyzer. Analyzer RBW was chosen so that the display was a result of the hopping channel modulation. For each RF output channel investigated, the spectrum analyzer center frequency was set to the channel carrier. Use the spectrum 20dB down delta function to measure the bandwidth.

5.2 Test SET-UP (Block Diagram of Configuration)

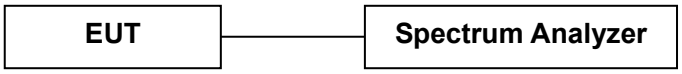

5.3 Measurement Results

Refer to attached data chart.

RBW:	3KHz	VBW:	10KHz
Test By:	Lee	Spectrum Detector:	PK
Temperature :	24 ℃	Test Date :	September 15, 2018
Test Result:	PASS	Humidity :	50 %
Test Channel:	125KHz		

Channel frequency (KHz)	20dB Down BW(Hz)
125	8733.97

Test Channel

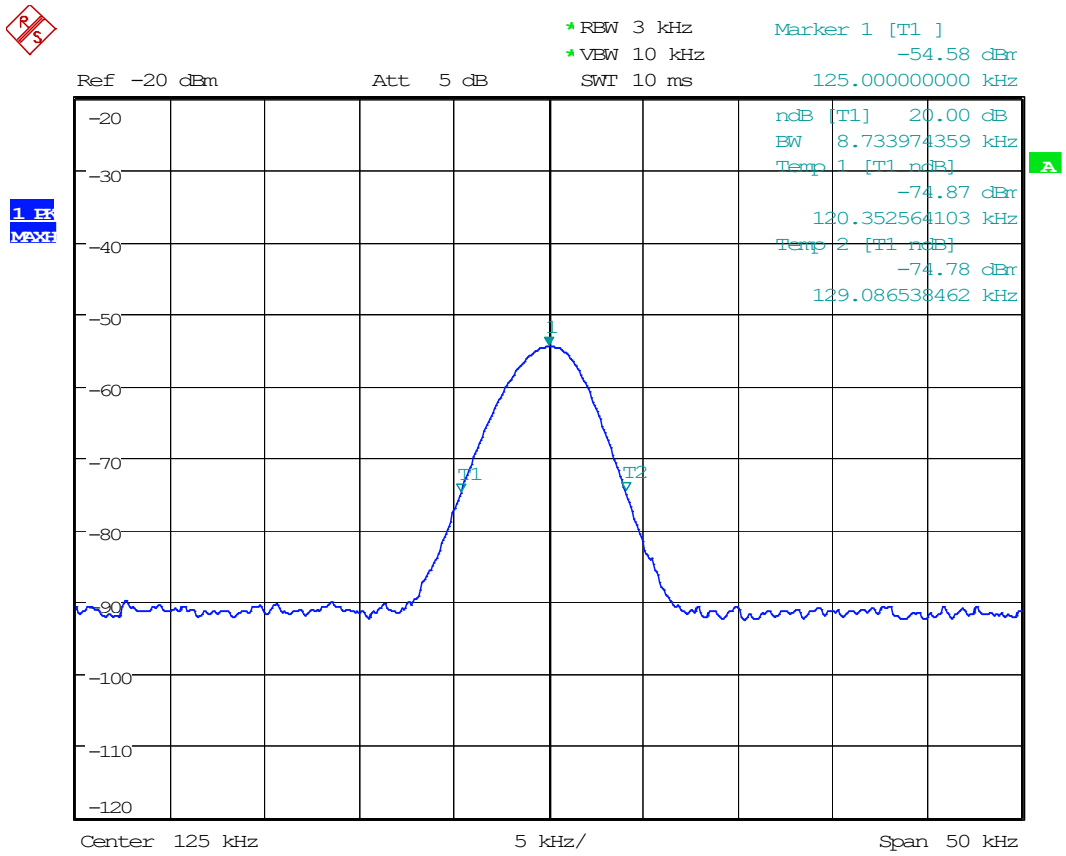

6. Antenna Application

6.1 Antenna requirement

According to of FCC part 15C section 15.203 and 15.240:

An intentional radiator shall be designed to ensure that no antenna other than that furnished by the responsible party shall be used with the device. The use of a permanently attached antenna or of an antenna that uses a unique coupling to the intentional radiator, the manufacturer may design the unit so that a broken antenna can be replaced by the user, but the use of a standard antenna jack or electrical connector is prohibited.

6.2 Measurement Results

The antenna is integral antenna that no antenna other than furnished by the responsible party shall be used with the device, and the best case gain of the antenna is 0dBi, So, the antenna is consider meet the requirement.

7. Test Equipment List

Description	Manufacturer	Model Number	Serial Number	Characteristics	Calibration Date	Calibration Due Date
Test Receiver	Rohde & Schwarz	ESCI7	100837	9KHz~7GHz	Mar. 14, 2018	Mar. 13, 2019
Antenna	Schwarzbeck	VULB9162	9162-010	30MHz~7GHz	Mar. 23, 2018	Mar. 22, 2019
Spectrum Analyzer	Rohde & Schwarz	FSU26	200409/026	20Hz~26.5GHz	Mar. 14, 2018	Mar. 13, 2019
Spectrum Analyzer	Keysight	N9020A	MY54200831	20Hz~26.5GHz	Apr. 24, 2018	Apr. 23, 2019
Spectrum Analyzer	Rohde & Schwarz	FSV40	101003	10Hz~40GHz	Apr. 24, 2018	Apr. 23, 2019
Horn Antenna	Schwarzbeck	BBHA9170	9170-372	15GHz~40GHz	Mar. 23, 2018	Mar. 22, 2019
Pre-Amplifier	EMCI	EMC 184045	980102	18GHz~40GHz	Apr. 24, 2018	Apr. 23, 2019
Power Sensor	DARE	RPR3006W	15I00041SNO64	100MHz~6GHz	Mar. 14, 2018	Mar. 13, 2019
Communication Tester	Rohde & Schwarz	CMW500	149004	70MHz~6GHz	Mar. 14, 2018	Mar. 13, 2019
Horn Antenna	COM-Power	AH-118	071078	500MHz~18GHz	Mar. 23, 2018	Mar. 22, 2019
Pre-Amplifier	HP	HP 8449B	3008A00964	1GHz~26.5GHz	Mar. 14, 2018	Mar. 13, 2019
Pre-Amplifier	HP	HP 8447D	1145A00203	100KHz~1.3GHz	Mar. 14, 2018	Mar. 13, 2019
Loop Antenna	Schwarzbeck	FMZB 1513	1513-272	9KHz~30MHz	Apr. 24, 2018	Apr. 23, 2019
Temperature & Humidity Chamber	REMAFEE	SYHR225L	N/A	-40~150℃	Apr. 24, 2018	Apr. 23, 2019
DC Source	MY	MY8811	N/A	0~30V	N/A	N/A
Temporary antenna connector	TESCOM	SS402	N/A	9KHz~25GHz	N/A	N/A
Power Meter	Anritsu	ML2495A	1139001	100k-65GHz	Apr. 24, 2018	Apr. 23, 2019
Power Sensor	Anritsu	MA2411B	100345	300M-40GHz	Apr. 24, 2018	Apr. 23, 2019
Test Software	EZ	EZ_EMC	N/A	N/A	N/A	N/A

---End---