AC-Q4x Series

Anti-Vandal Standalone Controllers

Installation and Programming Manual

Models:

AC-Q41HB
AC-Q41HP
AC-Q41SB
AC-Q42HB
AC-Q42HP
AC-Q42SB

ROSSLARE
SECURITY PRODUCTS

Copyright © 2017 by Rosslare. All rights reserved.

This manual and the information contained herein are proprietary to ROSSLARE ENTERPRISES LIMITED and/or its related companies and/or subsidiaries' (hereafter: "ROSSLARE"). Only ROSSLARE and its customers have the right to use the information.

No part of this manual may be re-produced or transmitted in any form or by any means, electronic or mechanical, for any purpose, without the express written permission of ROSSLARE.

ROSSLARE owns patents and patent applications, trademarks, copyrights, or other intellectual property rights covering the subject matter in this manual.

TEXTS, IMAGES, AND ILLUSTRATIONS INCLUDING THEIR ARRANGEMENT IN THIS DOCUMENT ARE SUBJECT TO THE PROTECTION OF COPYRIGHT LAWS AND OTHER LEGAL RIGHTS WORLDWIDE. THEIR USE, REPRODUCTION, AND TRANSMITTAL TO THIRD PARTIES WITHOUT EXPRESS WRITTEN PERMISSION MAY RESULT IN LEGAL PROCEEDINGS.

The furnishing of this manual to any party does not give that party or any third party any license to these patents, trademarks, copyrights or other intellectual property rights, except as expressly provided in any written agreement of ROSSLARE.

ROSSLARE reserves the right to revise and change this document at any time, without being obliged to announce such revisions or changes beforehand or after the fact.

Table of Contents

1. Introduction 9
1.1 Controller Types 9
1.2 Box Content 10
1.3 Ancillary Equipment 10
1.4 Front Panel Description 11
2. Technical Specifications 12
3. Installation 14
3.1 Mounting 14
3.2 Wiring 15
3.2.1 Pre-wired Models 16
3.2.2 Terminal Block Models 20
4. Operation 24
4.1 Modes of Operation 24
4.1.1 Normal Mode 24
4.1.2 Secure Mode 24
4.1.3 Bypass Mode 24
4.2 User Levels 25
4.3 Switching Operational Modes 26
4.3.1 From Normal to Secure Mode 26
4.3.2 From Secure to Normal Mode 26
4.3.3 From Normal to Bypass Mode 27
4.3.4 From Bypass to Normal Mode 27
4.4 Auxiliary Input and Output 27
4.5 REX Button 27

4.6 Tamper Feature 28
4.7 Lockout Feature (Keypad/Card Tamper) 28
4.8 BL-D40 External Sounder 29
5. Programming 30
5.1 Entering the Programming Mode 31
5.2 Exiting the Programming Mode 32
5.3 Changing the Open Code 32
5.4 Changing the Auxiliary Code 33
5.5 Changing the Programming Code 34
5.6 Changing the Normal/Secure Code 34
5.7 Changing the Normal/Bypass Code 35
5.8 Setting Fail Safe/Secure Operation, Tamper Siren and Lock Strike Release Time 36
5.9 Setting Auxiliary Modes 37
5.9.1 Auxiliary Mode 0 39
5.9.2 Auxiliary Mode 1 39
5.9.3 Auxiliary Mode 2 39
5.9.4 Auxiliary Mode 3 40
5.9.5 Auxiliary Mode 4 40
5.9.6 Auxiliary Mode 5 40
5.9.7 Auxiliary Mode 6 41
5.9.8 Auxiliary Mode 7 41
5.9.9 Auxiliary Mode 8 42
5.9.10 Auxiliary Mode 9 42
5.10 Keypad Heater Operation 43
5.11 Setting the Lockout Feature 43
5.12 Setting the Backlight Behavior 45
5.13 Enrolling Primary and Secondary Codes 45

5.13.1 Primary Codes Definition 45
5.13.2 Secondary Codes Definition 46
5.13.3 Enrolling Methods 46
5.14 Deleting Primary and Secondary Codes..... 49
5.14.1 Deleting Primary and Secondary Codes using the Standard Method 49
5.14.2 Deleting Primary and Secondary Codes using the Code Search Method 50
5.15 Relay Codes Assignment..... 51
5.15.1 Relay Code Assignment using Standard Method 51
5.15.2 Relay Code Assignment using Search Method 52
5.16 Changing PIN Code Length/Factory Default Settings 54
5.17 Replacing a Programming Code 55
5.18 Replacing a Normal/Secure Code 55
A. Limited Warranty 56

List of Figures

Figure 1: Front Panel.....11
Figure 2: Drilling Holes Identification 14
Figure 3: Pre-Wired Connection for Lock Strike Relay & REX.....17
Figure 4: Pre-Wired Connection for Auxiliary Input & Output 18
Figure 5: Pre-Wired Connection for the BL-D40 External Sounder 19
Figure 6: Connections to Terminal Blocks 20
Figure 7: Terminal Block Wiring of the Lock Strike Relay & REX 21
Figure 8: Terminal Block Wiring of the Auxiliary Input and Output 22
Figure 9: Terminal Block Wiring of the BL-D40 External Sounder.....23

List of Tables

Table 1: Wire Color Guide 16
Table 2: Programming Menus.....30
Table 3: Quick Reference Guide for Auxiliary Mode Setting.....38

Notice and Disclaimer

This manual's sole purpose is to assist installers and/or users in the safe and efficient installation and usage of the system and/or product, and/or software described herein.

BEFORE ATTEMPTING TO INSTALL AND/OR USE THE SYSTEM, THE INSTALLER AND THE USER MUST READ THIS MANUAL AND BECOME FAMILIAR WITH ALL SAFETY REQUIREMENTS AND OPERATING PROCEDURES.

- The system must not be used for purposes other than those for which it was designed.
- The use of the software associated with the system and/or product, if applicable, is subject to the terms of the license provided as part of the purchase documents.
- ROSSLARE exclusive warranty and liability is limited to the warranty and liability statement provided in an appendix at the end of this document.
- This manual describes the maximum configuration of the system with the maximum number of functions, including future options. Therefore, not all functions described in this manual may be available in the specific system and/or product configuration you purchased.
- Incorrect operation or installation, or failure of the user to effectively maintain the system, relieves the manufacturer (and seller) from all or any responsibility for consequent noncompliance, damage, or injury.
- The text, images and graphics contained in the manual are for the purpose of illustration and reference only.
- All data contained herein subject to change without prior notice.
- In no event shall manufacturer be liable for any special, direct, indirect, incidental, consequential, exemplary or punitive damages (including, without limitation, any and all damages from business interruption, loss of profits or revenue, cost of capital or loss of use of any property or capital or injury).
- All graphics in this manual are for reference only, some deviation between the image(s) and the actual product may occur.
- All wiring diagrams are intended for reference only, the photograph or graphic of the PCB(s) are intended for clearer illustration and understanding of the product and may differ from the actual PCB(s).

1. Introduction

The AC-Q4x series are vandal resistant standalone controllers. All the units are water resistant and suitable for indoor or outdoor mounting. The unit(s) accepts up to 500 users and allows entry via a personal identification number (PIN) and/or by presenting a proximity card.

1.1 Controller Types

The different types of control units described in this manual are:

- Type 41 – PIN only
- Type 42 – PIN and proximity card
- Type 44 – PIN and proximity card, with piezoelectric contacts

	Heater	Relay Current	Backlight	Keypad Type	Proximity
AC-Q41HB	✓	2 A	✓	Standard	×
AC-Q41HP	✓	2 A	✓	Standard	×
AC-Q41SB	✓	2 A	✓	Standard	×
AC-Q42HB	✓	2 A	✓	Standard	✓
AC-Q42HP	✓	2 A	✓	Standard	✓
AC-Q42SB	✓	2 A	✓	Standard	✓
AC-Q44	×	2 A	×	Piezoelectric	✓

1.2 Box Content

Before beginning, verify that all of the following is in the box. If anything is missing please report the discrepancy to your nearest Rosslare Office.

- One controller unit
- Installation kit
  - 1 drilling template (label/sticker)
  - 1 security spline key
  - 1 security hex screw
  - 4 mounting screws and wall plugs

1.3 Ancillary Equipment

The following ancillary equipment may be required to complete your installation:

- Electric Lock Strike Mechanism – Fail safe (power to lock) or fail secure (power to open)
- Power supply with backup battery – 12 to 24 VDC (from a regulated power supply) or 16 to 24 VAC (from a transformer)
- Request-to-Exit (REX) button (optional) – Normally open type; switch is closed when pressed
- BL-D40 external sounder (optional) – Provides siren, bell, and chime
- Magnetic contact (optional) – Installed for door monitor capabilities

1.4 Front Panel Description

Controls and indicators of all controller versions are identical (excluding the antenna, which is unique to Q42 and Q44) (Figure 1).

Figure 1: Front Panel

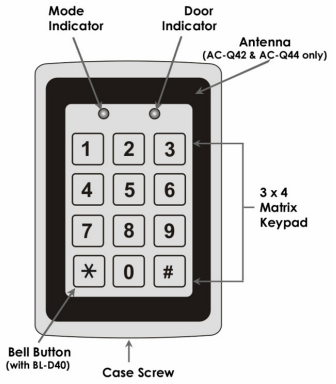

2. Technical Specifications

		AC-Q41HB	AC-Q42HB	AC-Q41SB	AC-Q41HP	AC-Q42SB	AC-Q42HP	AC-Q44
Input Voltage	**VDC**	12–24 VDC						
	VAC	12–24 VAC	16–24 VAC		12–24 VAC		16–24 VAC	
Maximum Input Current (12 VDC)	**Heater Off**	130 mA	125 mA	145 mA	130 mA		145 mA	125 mA
	Heater On	610 mA	605 mA	625 mA	610 mA		625 mA	N/A
Standby Input Current (12 VDC)	**Heater Off**	70 mA	65 mA	85 mA	70 mA		85 mA	65 mA
	Heater On	550 mA	545 mA	565 mA	550 mA		565 mA	N/A
Maximum Relay Current		2 A						
REX Input		Normally Open (dry contact)						
Aux. Input		Normally Open (dry contact)						
Max. Proximity Read Range*		N/A	65 mm (2.5 in.)	N/A		65 mm (2.5 in.)		

	AC-Q41HB	AC-Q42HB	AC-Q41SB	AC-Q41HP	AC-Q42SB	AC-Q42HP	AC-Q44
Proximity Modulation	N/A	ASK at 125 kHz	N/A		ASK at 125 kHz		
Proximity Card Compatibility	N/A	26-Bit EM cards	N/A		26-Bit EM cards		
LED Indicators	Two tri-colored LED (Mode and Door)						
Operating Temp. Range	-20°C to 60°C (-4°F to 140°F)						
Outdoor Usage	Water resistant, meets IP54		Weather resistant, epoxy-potted, meets IP65				
Size (H x W x T)	120 x 76 x 27 mm (4.7 x 3.0 x 1.1 in.)		120 x 76 x 22 mm (4.7 x 3.0 x 0.9 in.)				
Weight	440 g (1.0 lb)		521 g (1.2 lb)				

* Measured using a Rosslare proximity card or equivalent. Range also depends on electrical environment and proximity to metal.

3. Installation

> **Note** Installation of an RFID reader adjacent to metallic surfaces might alter the reader's specifications. To diminish this interference, use a plastic spacer when mounting the reader.

3.1 Mounting

Prior to starting, select the location where the controller unit is to be mounted.

To mount the controller:

1. Peel off the back of the self-adhesive mounting label template and place it on the required mounting location.
2. At the bottom of the unit's case, remove the screw.
3. Carefully remove the snap-off front cover of the unit to reveal the screw holes.
4. Depending on the type of installation, gang box or panel mount, drill the respective holes in the rear cover (see Figure 2 for details). For gang box mounting, drill two holes marked "A". For flat panel mount, drill four holes marked "B".

Figure 2: Drilling Holes Identification

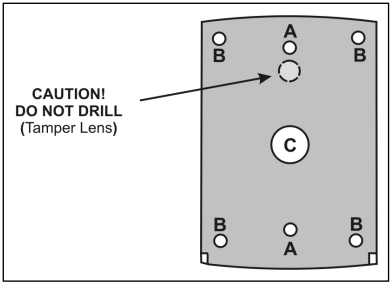

> **Note** The central hole, marked "C" is for routing the wiring to the controller.

5. Drill an additional 10-mm ($^{7}/_{16}$") hole for the cable. When installing the reader on a metallic surface, cover the inside of the hole with a grommet or electrical tape.
6. Insert the unit's cable wire into the cable hole and wire the unit as described in Section 3.2.
7. Screw the back plate into the surface. Ensure the screws are the size specified on the installation template.

> **Note** The unit can also be mounted using strong epoxy glue. After application, firmly hold the unit in place until the glue dries.

8. Carefully re-attach the front cover of the unit.
9. Secure the front cover by using the supplied security Torx screw. A Torx security screw tool is provided to tighten the security Torx screw.

3.2 Wiring

The controllers are provided either with a pre-wired cable or with a screw-type terminal block:

Pre-wired Cabling Models	Terminal Block Models
AC-Q41SB	AC-Q41HB/HP
AC-Q42SB	AC-Q42HB
AC-Q44	

3.2.1 Pre-wired Models

These units are supplied with a 10-conductor 60-cm (24-in.) pigtail (24-AWG cable) with exposed wires coated with solder.

To wire the controller:

1. Select the appropriate connections according to Table 1.

Table 1: Wire Color Guide

Color	Description
Red	V input
Black	Ground
Green	REX/BL
White	In/Monitor
Purple	Lock: Com
Gray	Lock: N.O.
Brown	Lock: N.C.
Blue	Aux: Com
Yellow	Aux: N.O.
Orange	Aux: N.C.

2. Prepare the secured power supply's cable by cutting the cable jacket back 3.2 cm (1¼") and strip the wire 1.3 cm (½").
3. Splice the controller pigtail wires to the corresponding ancillary devices and insulate each connection, including unused wires. Refer to the wiring diagrams, depending on the desired application:
   - Wiring the Lock Strike Relay & REX (Figure 3)
   - Wiring for Auxiliary Input & Output (Figure 4)
   - Wiring for the BL-D40 External Sounder (Figure 5)

Figure 3: Pre-Wired Connection for Lock Strike Relay & REX

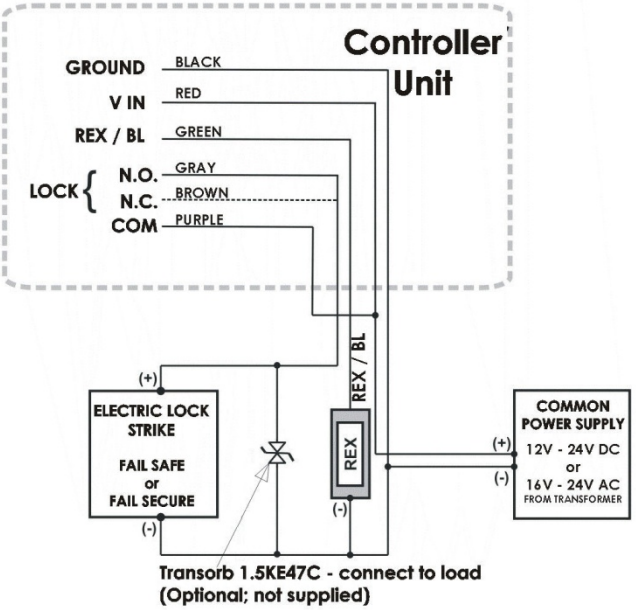

Figure 4: Pre-Wired Connection for Auxiliary Input & Output

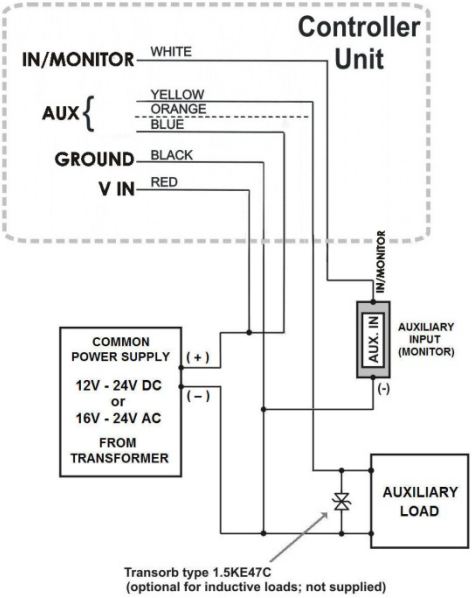

Figure 5: Pre-Wired Connection for the BL-D40 External Sounder

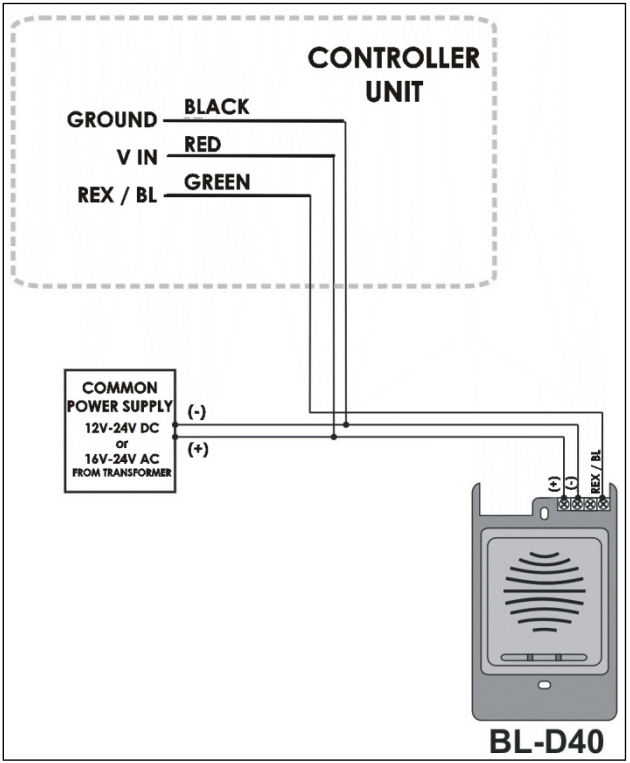

3.2.2 Terminal Block Models

These controllers come with removable terminal blocks that are pushed on pins on the motherboard of the controllers.

To wire the terminal blocks:

1. Route the wires or cable through the large hole in the back cover See Figure 6. Connect the terminal blocks as shown.
2. Wire the cabling according to the following diagrams.
3. Wiring the Lock Strike Relay & REX (Figure 7)
4. Wiring for Auxiliary Input & Output (Figure 8)
5. Wiring for the BL-D40 External Sounder (Figure 9)

Figure 6: Connections to Terminal Blocks

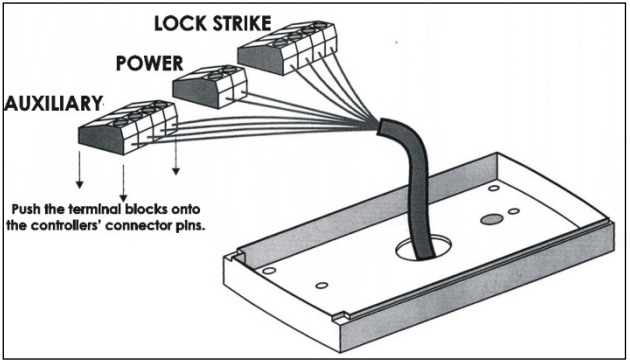

Figure 7: Terminal Block Wiring of the Lock Strike Relay & REX

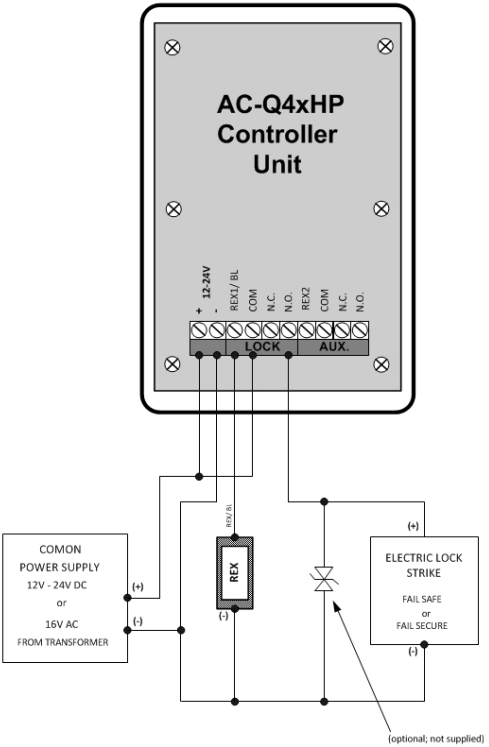

Figure 8: Terminal Block Wiring of the Auxiliary Input and Output

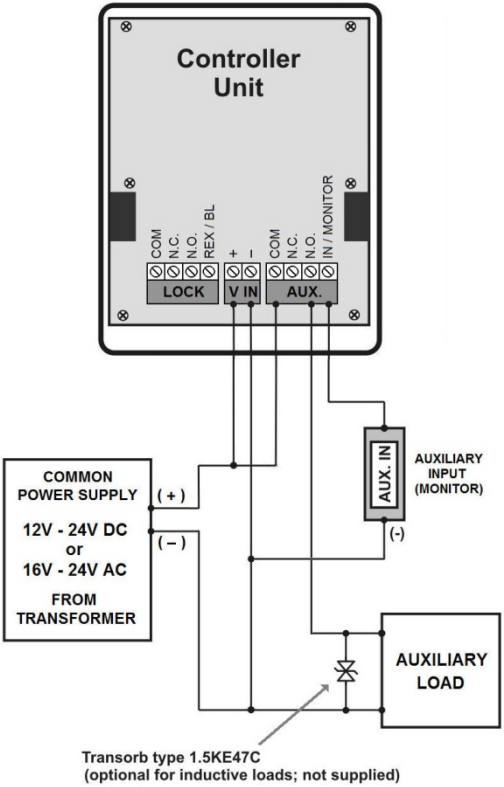

Figure 9: Terminal Block Wiring of the BL-D40 External Sounder

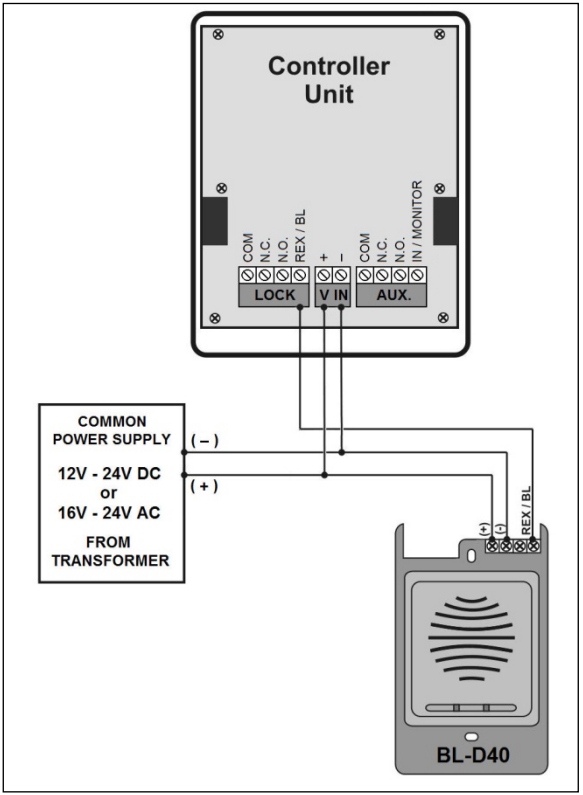

4. Operation

Note

- In the Operation chapter, “code” refers to a PIN code or proximity card depending on the unit you have.
- Memory slots can be a proximity card or PIN code depending on the unit you have.

4.1 Modes of Operation

The control units have three modes of operation. These are indicated by the color of the Mode indicator.

4.1.1 Normal Mode

The left LED is green.

Normal mode is the default mode. In Normal mode, the door is locked until a valid Primary code is presented to the controller.

The controller can only be programmed in Normal mode.

4.1.2 Secure Mode

The left LED is red.

Only Secure and Master users can access the premises in Secure mode.

A secure user must enter a primary and secondary code to gain entry. Once the primary code has been entered, the right LED flashes green for 10 seconds. During this time, the Secondary code must be entered. A Master user only needs to present the code once to gain entry.

4.1.3 Bypass Mode

The left LED is orange.

In Bypass mode, access to the premises is dependent on whether the controller's Lock Strike Relay is programmed for Fail Safe Operation or Fail Secure Operation. When the Lock Strike relay is programmed for

Fail Secure Operation, the door is locked until the star button (*****) is pressed. When the Lock Strike relay is programmed for Fail Safe Operation, the door is constantly unlocked.

In case of power failure, once the power is restored, the controller returns to Normal mode for security reasons.

4.2 User Levels

AC-Q4x series access control units accept up to 500 users and provide entry via the use of codes. Each user is allocated two memory slots: Memory Slot 1 (primary code) and Memory Slot 2 (secondary code).

The way in which the two memory slots are programmed determines a user's access level and also establishes access is granted for each of the three modes of operation.

There are three user levels:

- Normal User

  A Normal user only has a Primary code and is granted access only when the controller is in its Normal or Bypass mode.

- Secure User

  A Secure user must have a primary and secondary code assigned, and the two codes must not be the same. The Secure user can gain access in any mode of operation. In Normal mode, the secure user must use the Primary code to gain entry. In Secure mode, the Secure user must first enter the Primary and then the Secondary code to gain entry.

- Master User

  A Master user must have identical Primary and Secondary codes assigned. The codes are entered with the same proximity card or the same PIN. The Master user can gain access during any mode of operation by entering the code only once.

4.3 Switching Operational Modes

The three modes of operation defined above can be changed through a few steps.

4.3.1 From Normal to Secure Mode

The default factory setting for the normal/secure code is 3838.

To change from Normal to Secure mode:

1. Enter the 4-digit Normal/Secure code.

   The left LED flashes red.

2. Press **#** to confirm the mode change.

   The left LED stops flashing.

The auxiliary input of the controller can also be used to switch the mode of operation from Secure to Normal and vice versa. If the auxiliary input is selected, it de-activates the Norma/Secure mode code (see Section 5.9).

4.3.2 From Secure to Normal Mode

The default factory setting for the normal/secure code is 3838.

To change from Secure to Normal mode:

1. Enter the 4-digit Normal/Secure code.

   The left LED flashes green.

2. Press **#** to confirm the mode change.

   The left LED stops flashing.

The auxiliary input of the controller can also be used to switch the mode of operation from Secure to Normal and vice versa. If the auxiliary input is selected, it de-activates the Norma/Secure mode code (see Section 5.9).

4.3.3 From Normal to Bypass Mode

By default, there is no Normal/Bypass code. The Normal/Bypass code must first be programmed to use this function (see Section 5.7 to create/modify the Normal/Bypass code).

To change from Normal to Bypass mode:

1. Enter the 4-digit Normal/Bypass code.

   The left LED flashes orange.

2. Press **#** to confirm the mode change.

   The left LED stops flashing.

4.3.4 From Bypass to Normal Mode

To change from Bypass to Normal mode:

1. Enter the 4-digit Normal/Bypass code.

   The left LED flashes green.

2. Press **#** to confirm the mode change.

   The left LED stops flashing.

4.4 Auxiliary Input and Output

For optimum usability in different applications, the controller's auxiliary input and output can be configured in 10 different modes of operation (see Section 5.9).

4.5 REX Button

The REX button is located within the premises and is used to open the door from the inside. It is usually located in a convenient location, such as next to the door or at a receptionist's desk. The door chime in the BL-D40 (if enabled) does not sound when the REX button is used to open the door.

The function of the REX button depends on the Lock Strike relay, whether it is programmed for failsafe or for fail secure operation.

- Fail Secure Operation

  From the moment the REX button is pressed, the door is unlocked until the Lock Strike Release time has elapsed. After this time, the door is locked, even if the REX button has not been released.

- Failsafe Operation

  From the moment the REX button is pressed, the door is unlocked until the REX button is released. In this case, the Lock Strike relay only begins its countdown once the REX button is released. This feature is designed to keep the door open, when used in conjunction with fire systems.

4.6 Tamper Feature

If the controller is forcibly opened or the controller is removed from the wall, a tamper event is triggered. A tamper signal is sent to the BL-D40 external sounder.

If the BL-D40 receives a tamper event signal, it activates a tamper output and a strobe light. The Siren Time can be easily programmed in the controller from 0 to 9 minutes.

The tamper event can activate the auxiliary output if the controller is in Auxiliary Mode 3 (see Table 3).

4.7 Lockout Feature (Keypad/Card Tamper)

If the controller is presented with wrong codes (PIN or card) consecutively several times, the unit goes into Lockout mode.

When a lockout occurs, the controller keypad and reader are de-activated so no codes can be entered until the set lockout period expires.

During Lockout mode, the left LED is Off, the right LED flashes red, and the controller beeps every two seconds.

4.8 BL-D40 External Sounder

The BL-D40 external sounder is designed for indoor use only and installed within the secured premises. The sounder can be powered by a 12 to 24 VDC power supply or by a 16 VAC transformer. The BL-D40 is capable of emitting four different types of audible and visual alerts: bell, chime, siren and strobe light.

- The bell sounds when the controller's bell button is pressed.
- The door chime can be programmed to sound whenever a valid code is entered as well as for a door held open alert.
- The siren can be programmed to sound when the controller is tampered with (opened or removed from the wall). The length of the siren can also be programmed in the controller.

The controller communicates with the BL-D40 via a Rosslare proprietary protocol. If the BL-D40 receives an unrecognized code over its communication line or communications between the controller and the BL-D40 are severed, the strobe flashes repeatedly, until the communication problem has been resolved.

5. Programming

Note

- In the Programming chapter, "code" refers to a PIN code or proximity card depending on the unit you have.
- When entering a PIN or presenting a proximity card is mentioned, the meaning may vary between units.

Programming is done solely via the unit's keypad-driven Programming Menu System. To reach the Programming Menu System, the controller must first be placed into Programming Mode (see Section 5.1).

During the manufacturing process, certain codes and settings are pre-programmed. These settings are the called default factory settings.

Table 2 shows all the programming menus, with default factory codes and settings.

Table 2: Programming Menus

Menu No.	Description	Default				Section
		4 Digits	5 Digits	6 Digits	4-8 Digits	
1	Change Open code	2580	25802	258025	25802580	5.3
2	Change Auxiliary code	0852	08520	085208	08520852	5.4
3	Change Program code	1234	12341	123412	12341234	5.5
4	Change Normal/Secure code	3838	38383	383838	38383838	5.6
5	Change Normal/Bypass code	NA				5.7
6	Change Door Release time	0004				5.8
	Define auxiliary inputs/outputs	2004				5.9
	Enable or disable keypad heater	3000				5.10
	Set Lockout Feature	4000				5.11
	Backlight and LED Behavior	5100				5.12

Menu No.	Description	Default				Section
		4 Digits	5 Digits	6 Digits	4-8 Digits	
7	Enroll proximity cards, PIN or both	NA				5.13
8	Delete proximity cards or PIN	NA				5.14
9	Code assignment with strike/auxiliary	NA				5.15
0	Return to factory defaults/Change PIN code Length	NA				5.16

5.1 Entering the Programming Mode

Note

- The controller must be in Normal mode to enter the programming mode.
- The factory default 4-digit programming code is 1234.
- If a Programming code is not entered within 5 seconds, the controller returns to Normal mode.

To enter Programming mode:

1. Press **#** twice.

   The left LED turns off and the right LED turns red.

2. Enter your 4-digit Programming code.

   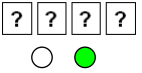

   The right LED turns green.

5.2 Exiting the Programming Mode

Note

- Wrong entries may reset the controller back to Normal mode.
- If no key is pressed for 1 minute, while in programming mode, the controller exits Programming mode and returns to Normal mode.

To exit Programming mode:

1. Press **#** twice to exit Programming mode at any time.

   You hear 3 beeps.

   The left LED turns green and the right LED turns off.

   Wrong entries reset the controller back to Normal mode.

   While in Programming mode, if no key is pressed for one minute, the unit exits Programming mode and returns to Normal mode.

5.3 Changing the Open Code

The Open code is mainly used as a method to quickly test the Lock Strike relay during installation.

For security reasons, when the first user is added to the controller or the Auxiliary code is changed, the default Open code is automatically deleted; non-default codes are not be erased automatically.

Note

- Open code does not function in Secure mode.
- For wrong entries, you hear a long beep and the controller returns to Normal mode.
- Code 0000 erases and deactivate the open code.
- The factory 4-digit default setting for the open code is 2580.

To change the Open code:

1. Enter Programming mode.

2. Press **1** to enter Menu 1.

   The left LED turns red.

3. Enter the new 4-digit Open code.

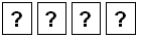

   You hear three beeps.
   The system returns to Normal mode.

5.4 Changing the Auxiliary Code

The Auxiliary code is mainly used as a method to quickly test the Auxiliary relay during installation.

For security reasons, when the first user is added to the controller or the open code is changed, the default auxiliary code is automatically deleted; non-default codes are not be erased automatically.

Note

- Auxiliary code does not function in Secure mode.
- Auxiliary code only works when the Auxiliary mode is 0, 1, 8 or 9.
- Wrong entries return the controller to Normal mode.
- Code 0000 erases and deactivates the auxiliary code.
- The default 4-digit factory setting for the auxiliary code is 0852.

To change the Auxiliary code:

1. Enter Programming mode.

2. Press **2** to enter Menu 2.

   The left LED turns orange.

3. Enter the new 4-digit Auxiliary code.

   ? ? ? ?

   You hear three beeps.

   The system returns to Normal mode.

   Green

5.5 Changing the Programming Code

> Note
> - The Programming code cannot be erased; the code 0000 is invalid and does not erase the Programming code.
> - The factory default 4-digit Programming code is 1234.

To change the Programming code:

1. Enter Programming mode.

   Green

2. Press **3** to enter Menu 3.

   3

   The left LED turns green.

   Green Green

3. Enter the new 4-digit Programming code.

   ? ? ? ?

   You hear three beeps.

   The system returns to Normal mode.

   Green

5.6 Changing the Normal/Secure Code

> Note
> - When the Auxiliary mode is 1, 2, 3 or 4, the auxiliary input takes priority over the Normal/Secure code.
> - Code 0000 erases and deactivates the Normal/Secure code.

To change the Normal/Secure code:

1. Enter Programming mode.

   Green

2. Press **4** to enter Menu 4.

   4

   The left LED flashes red.

   Red Green

3. Enter the new 4-digit Normal/Secure code. ? ? ? ?

   You hear three beeps.

   The system returns to Normal mode. Green

5.7 Changing the Normal/Bypass Code

The Normal/Bypass code is also used to turn the door chime off and on. Chime only functions with the BL-D40 external sounder.

Note

- The chime is only heard when the Lock Strike relay is activated by a valid code entry.
- Code 0000 erases and deactivates the Normal/Bypass code.

To change the Normal/Bypass code:

1. Enter Programming mode. Green
2. Press **5** to enter Menu 5. 5

   The left LED flashes orange. Orange Green
3. There are four different ways to program the Normal/Bypass code and door chime:

   Disable both Bypass code and the door chime. Enter the code **0000**. 0 0 0 0

   Disable Bypass code and enable the door chime. Enter the code **0001**. 0 0 0 1

   Enable Bypass code and disable the door chime. Enter any code ending with 0. ? ? ? 0

   Enable Bypass code and enable the door chime. Enter a code not ending with 0. ? ? ? 0

   You hear three beeps.

   The system returns to Normal mode. Green

5.8 Setting Fail Safe/Secure Operation, Tamper Siren and Lock Strike Release Time

> Note: The default value is 0004, which corresponds to Fail Secure operation, no siren, and 4-seconds Lock Strike release time.

To set the Fail Safe/Secure Operation, Tamper Siren and Lock Strike Release Time:

1. Enter Programming mode.

2. Press **6** to enter Menu 6.

   The left LED flashes green.

3. Construct a code using the following instructions:

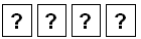

   - First digit

     For Fail Secure Operation, the first digit should be **0**.

     For Fail Safe Operation the first digit should be **1**.
   - Second digit

     Siren Time in minutes (1–9, 0 – disabled)
   - Third and fourth digits

     Enter the number of seconds (from 1 to 99) that you want the Lock Strike to be released.

   For example, **0312** means a Fail Secure Operation consisting of a 3-minute siren and a 12-second Lock Strike release time.

   You hear three beeps.

   The system returns to Normal mode.

5.9 Setting Auxiliary Modes

The default auxiliary setting is 2004.

> **Note** Auxiliary Relay activation is subject to the user's Auxiliary code assignment (excluding Shunt, which is activated by all users). For more details, see Section 5.15.

To set Auxiliary modes:

1. Enter Programming mode.

   Green

2. Press **6** to enter Menu 6.

   6

   The left LED flashes green.

   Green Green

3. Construct a code using the following instructions:

   2 ? ? ?

   - Second digit (Auxiliary Mode)

     In addition to the Lock Strike Relay and Lock Strike REX, the unit features an Auxiliary Input. The Auxiliary mode defines the function of the Auxiliary Input.

   - Third and fourth digits (Auxiliary Setting)

     Each of the Auxiliary modes has a 2-digit setting that affects how the Auxiliary mode functions (Table 3).

   You hear three beeps.

   The system returns to Normal mode.

   Green

Table 3: Quick Reference Guide for Auxiliary Mode Setting

Auxiliary Mode	Auxiliary Input Function	Auxiliary Output Activated by	Auxiliary Relay	Auxiliary Settings (in seconds)
0	AUX REX	Valid code or AUX REX	N.O.	01 to 99 Aux. Relay Release Time 00 Aux. relay toggle
1	Normal/Secure switch	Valid code	N.O.	01 to 99 Aux. Relay Release Time 00 Aux. relay toggle
2	Normal/Secure switch	Star button (*****)	N.O.	01 to 99 Aux. Relay Release Time 00 Aux. relay toggle
3	Normal/Secure switch	Tamper event	N.C.	01 to 99 Aux. Relay Release Time 00 Aux. relay tamper activated
4	Normal/Secure switch	Direct shunt	N.O.	01 to 99 Shunt time
5	Door Monitor	Shunt	N.C.	01 to 99 maximum Shunt time
6	Door Monitor	Forced door	N.C.	01 to 99 Forced delay
7	Door Monitor	Door ajar	N.C.	01 to 99 Ajar delay
8	LED control – Green	Valid code	N.O.	01 to 99 Aux. Relay Release time 00 Aux. relay toggle
9	LED control – Red	Valid code	N.O.	01 to 99 Aux. Relay Release time 00 Aux. relay toggle

The following subsections describe each Auxiliary mode.

5.9.1 Auxiliary Mode 0

Auxiliary input function: Activates the auxiliary output

Auxiliary output activated by: Valid user code, Auxiliary code, Auxiliary input

For example, in Auxiliary Mode 0, the controller can function as a 2-door controller. The auxiliary relay is to be attached to the lock on the second door. The auxiliary setting defines the Door Open time for the second door. The auxiliary input is to be attached to the REX button for the second door. Door Monitor input feature for the second door is not enabled when using this mode.

5.9.2 Auxiliary Mode 1

Auxiliary input function: Toggles Normal/Secure modes

Auxiliary output activated by: Valid user code, Auxiliary code

For example, in Auxiliary Mode 1, the controller can function as a 2-door controller. The auxiliary relay is to be attached to the lock on the second door. REX feature for the second door is not enabled when using this mode.

The auxiliary setting defines the Door Open time for the second door. The auxiliary input can switch the mode of operation of the controller between Normal and Secure mode. By connecting a switch timer or alarm system output to the auxiliary input, the controller can be automatically switched from Normal mode (during office hours) to Secure mode (after office hours).

5.9.3 Auxiliary Mode 2

Auxiliary input function: Toggles Normal/Secure modes

Auxiliary output activated by: Star Button (*)

For example, in Auxiliary Mode 2, the auxiliary relay can function as a general purpose time switch that can be activated when ***** is pressed. The auxiliary setting establishes for how long the auxiliary relay is to be activated. The auxiliary input can switch the mode of operation of the controller between Normal and Secure mode. By connecting a

switch timer or alarm system output to the auxiliary input, the controller can be automatically switched from Normal mode (during office hours) to Secure mode (after office hours).

5.9.4 Auxiliary Mode 3

Auxiliary input function: Toggles Normal/Secure modes

Auxiliary output activated by: Alarms

For example, in Auxiliary Mode 3, the auxiliary output is activated if the controller is tampered; that is, if the case is forcibly opened or removed from the wall. The auxiliary input can switch the mode of operation of the controller between Normal and Secure mode. By connecting a switch timer or alarm system output to the auxiliary input, the controller can be automatically switched from Normal mode (during office hours) to Secure mode (after office hours).

5.9.5 Auxiliary Mode 4

Auxiliary input function: Toggles Normal/Secure modes

Auxiliary output activated by: direct shunt (explanation below)

For example, in Auxiliary Mode 4, the controller is capable of bypassing an alarm zone by shunting an alarm system's door sensor. The auxiliary output is to be wired in parallel to the door sensor output. When in use, the auxiliary output is normally open and the door sensor functions normally. When a valid code is entered, the auxiliary relay shunts the door sensor for the duration of the Shunt time, as defined by the auxiliary setting. If the door is left open longer than the Shunt time, an alarm is triggered.

5.9.6 Auxiliary Mode 5

Auxiliary input function: Door Monitor

Auxiliary output activated by: Shunt (explanation below)

For example, in Auxiliary Mode 5, the controller is capable of shunting an alarm system. In this mode, the auxiliary input is to be wired to the magnetic contact switch on the door. The auxiliary relay is wired to the alarm system. Without a valid code entered, the auxiliary relay matches the condition of the magnetic contact switch; if the door

opens, the auxiliary relay opens; if the door closes, the auxiliary relay closes. When a valid code is entered, a countdown for maximum Shunt time, as defined by the auxiliary setting, begins; if the door is not closed before the maximum Shunt time, the alarm is triggered.

5.9.7 Auxiliary Mode 6

Auxiliary input function: Door Monitor

Auxiliary output activated by: Forced entry

For example, in Auxiliary Mode 6, the controller can trigger the auxiliary relay if the door has been forced. If the Siren Settings is enabled, the siren is activated.

In this mode, the auxiliary input functions as a door monitor switch and is wired to the magnetic contact switch on the door. The auxiliary relay is to be wired to the alarm system. If the door is forced open, the controller waits for the period of the Forced Door Delay time to elapse and then it activates the auxiliary relay. The auxiliary setting sets the forced door delay period.

5.9.8 Auxiliary Mode 7

Auxiliary input function: Door Monitor

Auxiliary output activated by: Door Ajar (door held open)

For example, in Auxiliary Mode 7, the controller can trigger the auxiliary relay, if it detects that the door has been held open (ajar) too long. In this mode the auxiliary input functions as a door monitor switch and is wired to the magnetic contact switch on the door. The auxiliary relay is to be wired to the alarm system. If the door is opened, the controller waits for the Door Ajar Delay time to elapse and if the door does not close prior to the end of this period, the controller activates the auxiliary relay. The auxiliary setting defines the Door Ajar time.

If the BL-D40 External Sounder is connected in the system and a door-ajar event occurs, the BL-D40 chimes every few seconds for 1 minute or until the door is closed.

5.9.9 Auxiliary Mode 8

Auxiliary input function: Green LED control

Auxiliary output activated by: Valid user code, Auxiliary code

For example, in Auxiliary Mode 8, the controller can function as a 2-door controller and also provide indicator functionality control. The auxiliary relay is connected to the lock on the second door. The auxiliary setting defines the Door Open time for the second door. The auxiliary input is used to control the Door indicator. If the auxiliary input is open, the indicator flashes green; if the auxiliary input is closed, the Door indicator flashes red.

Note

This mode takes control of the Door indicator LED.

The indicator LED is not lit when:

- A valid code is entered
- While in Secure mode, when waiting for a secondary code

5.9.10 Auxiliary Mode 9

Auxiliary input function: Red LED control

Auxiliary output activated by: Valid user code, Auxiliary code

For example, in Auxiliary Mode 9, the controller can function as a 2-door controller and also provide indicator functionality control. The auxiliary relay is connected to the lock on the second door. The auxiliary setting defines the Door Open time for the second door. The auxiliary input is used to control the indicator. If the auxiliary input is open, the Door indicator flashes red; if the auxiliary input is closed, the Door indicator flashes green.

Note

This mode takes control of the Door indicator LED.

The indicator LED is not lit when:

- A valid code is entered
- While in Secure mode, when waiting for a secondary code

5.10 Keypad Heater Operation

> Note: This section is not applicable for AC-Q44 (without keypad heater).

The controllers contain a built-in keypad heater. Once the heater circuitry is activated, the heater turns on when the ambient temperature drops to 4±1°C and remains on until the keypad temperature rises to 7(+2 or -1)°C.

When the heater is on, the controller can operate down to an ambient temperature of -20°C. When the heater is disabled, the lowest operating temperature is 0°C.

The default setting for the keypad heater is disabled state (**3000**).

To define the keypad heater operation:

1. Enter Programming mode.

2. Press **6** to enter Menu 6.
3. The Mode indicator flashes green.

4. Construct a code using the following instructions:

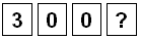

   - To disable the heater, the fourth digit is set to **0**.
   - To enable the heater, the fourth digit is set to **1**.

5.11 Setting the Lockout Feature

If the controller is presented with wrong codes (PIN or card) consecutively several times, the unit goes into Lockout mode.

When a lockout occurs, the controller keypad and reader are locked so no codes can be entered until the set lockout period expires. During Lockout, the left LED is Off, the right LED flashes red, and the

controller beeps every two seconds. The default setting for the Lockout Feature is 4000 (Lockout Disabled).

> Note: Using the lockout feature is highly recommended, especially when selecting to use short PIN code length (4 or 5 digits).

To define the Lockout feature:

1. Enter Programming mode.

2. Press **6** to enter Menu 6.

   The Mode indicator flashes green.

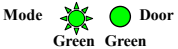

3. Construct a code using the following instructions:

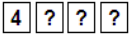

   - Second digit

     Set the number of wrong code attempts, which causes a Lockout between 0 and 9 attempts.
   - Third and fourth digits

     Sets the Duration of the lockout, between 00 and 99; the value is multiplied by ten, resulting in 0 to 990 seconds.

5.12 Setting the Backlight Behavior

> Note: This section is applicable for AC-Q4xHB/SB models only (backlight).

The controller allows you to define the way the unit's backlight works.

To set the backlight behavior:

1. Enter Programming mode.

2. Press **6** to enter Menu 6.

   The left LED flashes green.

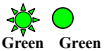

3. Enter one of the following codes:
   - **5000** – Backlight off
   - **5100** – Backlight on (default)
   - **5200** – Backlight is off, activates for 10 seconds when a key is pressed, after which it dims until off
   - **5300** – Backlight is dimmed, activates for 10 seconds when a key is pressed, after which it returns to a dimmed level

5.13 Enrolling Primary and Secondary Codes

5.13.1 Primary Codes Definition

- Primary codes can only be enrolled to an empty user slot, a slot with no existing Primary code in the controller's memory.
- A Primary code must be unique; for instance, one user's primary code may not be the same as that of another user.
- Primary codes cannot be the same as system codes, such as: the Normal/Secure code or the Open code.
- Users possessing a Primary code can gain entry during Normal and Bypass modes.

5.13.2 Secondary Codes Definition

- Secondary codes can only be enrolled to a user slot that already includes a primary code.
- A secondary code need not be unique; for instance, one user's Secondary code may be the same as that of another user.
- Secondary codes cannot be the same as any system codes, such as: the Normal/Secure code or the open code.
- Users possessing secondary codes can gain entry in any mode of operation.
- A secondary code can be the same as the primary code of any user.

5.13.3 Enrolling Methods

There are two methods used to enroll primary and secondary codes: the standard method and the code search method.

- The Standard Method is used when the user slot number, for the user you wish to program, is known. You can program both primary and secondary codes using this method.
- The Code Search Method is mainly used when enrolling a secondary code and the user's slot code is unknown. The code search method functions only if a user's primary code is already enrolled and the secondary code is not.

5.13.3.1 Enrolling Primary and Secondary Codes using the Standard Method

To enroll Primary and Secondary codes using the Standard method:

1. Enter Programming mode.

2. Press **7** to enter Menu 7.

   The right LED turns orange.

3. Enter the 3-digit user slot number between 001and 500 for the slot to which you wish to enroll a Primary or Secondary code.

   For example, User Slot 003 represents User #3.

   If the selected slot has no Primary code, the left LED flashes green, indicating that the controller is ready to accept a Primary code.

   If the selected slot already has a Primary code but no Secondary code, the left LED flashes red, indicating that the controller is ready to accept a Secondary code.

   If the selected slot already has a Primary and Secondary code, you hear a long beep and the controller returns to Normal mode.

4. Perform one of the following:

   - Enter the PIN code that you want to assign as the Primary or Secondary code for this slot number.
   - Present your user card that you want to assign as the Primary or Secondary code for this slot number.

   If the PIN or user card presented is valid, the left LED stops flashing and the controller is ready for you to enter the next 3-digit slot number (refer to Step 3) for the slot to which you want to assign a code.

5. Do one of the following:
   - Press **#** to move to the next available user slot number.
   - Enter another 3-digit user slot number.
   - If you do not wish to continue enrolling codes, press **#** twice and the controller returns to Normal mode.

5.13.3.2 Enrolling Secondary Codes using the Code Search Method

The code search method enables to quickly enroll a secondary code for a user whose primary code is known and whose slot number is unknown.

To enroll secondary codes using the Code Search method:

1. Enter Programming mode.

2. Press **7** to enter Menu 7.

   The right LED turns orange.

3. Enter **000** as the 3-digit user slot number.

   The right LED flashes orange.

   The controller is now waiting for the Primary code of the user to whom you want to add a Secondary code.

4. Perform one of the following:

   Enter the PIN code belonging to the user for whom you wish to add a Secondary code.

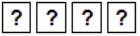

   Present the user card belonging to the user for whom you wish to add a Secondary code.

   The left LED flashes red.

   If the Primary code entered is not valid, you hear a long beep and the unit continues to wait for a valid Primary code.

5. Perform one of the following:

   - Enter the PIN code to be used as the Secondary code.

     ? ? ? ?

   - Present the user card to be used as the Secondary code.

   If the Secondary code is valid, the controller beeps three times and returns to Normal mode.

   If the Secondary code is invalid, the controller sounds a long beep, and the unit continues to wait for a valid Secondary code to be entered.

5.14 Deleting Primary and Secondary Codes

There are two methods to delete primary and secondary codes: a standard method and a search method. When deleting a user slot, both the primary code and the secondary code are erased.

> Note: It is recommended that a record be kept of added and deleted users. This makes it easier to keep track of user slots' status (empty or not).

5.14.1 Deleting Primary and Secondary Codes using the Standard Method

To delete the Primary and Secondary codes using the Standard Method:

1. Enter Programming mode.

   Green

2. Press **8** to enter Menu 8.

   8

   The left LED turns red and the right LED turns orange.

   Red Orange

3. Enter the 3-digit User Slot code you wish to delete.

   ? ? ?

The left LED flashes red indicating the controller is waiting for the Programming code to confirm the deletion.

If the user slot is empty, you hear a long beep and the unit returns to Normal mode.

4. Enter your 4-digit Programming code to confirm the deletion.

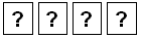

If the Programming code is valid, three beeps are heard and the controller returns to Normal mode.

If the Programming code is invalid, a long beep is heard and the controller returns to Normal mode.

5.14.2 Deleting Primary and Secondary Codes using the Code Search Method

To delete the Primary and Secondary codes using the Code Search Method:

1. Enter Programming mode.

2. Press **8** to enter Menu 8.

The left LED turns red and the right LED turns orange.

3. Enter **000** as the 3-digit user slot number.

The right LED flashes orange.

The controller is now waiting for the Primary code of the user you want to delete.

4. Perform one of the following:

   - Enter the PIN code of the Primary code belonging to the user you want to delete. ? ? ? ?
   - Present the user card of the Primary code belonging to the user you want to delete.

   The left LED flashes red.

5. Enter your 4-digit Programming code to confirm the deletion.

   If the Programming code is valid, you hear three beeps and the unit returns to Normal mode.

   If the Programming code is invalid, you hear a long beep and the unit returns to Normal mode.

5.15 Relay Codes Assignment

When a primary code is enrolled for any user, the user is authorized to activate the Lock Strike relay. However, different user codes may be set to operate the auxiliary relay instead or operate both the Lock strike and auxiliary relay. Assignment of such codes is achievable for any valid user code entered in the controller.

There are two methods to assign relay codes to users: a standard method and a search method.

5.15.1 Relay Code Assignment using Standard Method

To assign the relay code using Standard method:

1. Enter Programming mode.

2. Press **9** to enter Menu 9.

   9

   The left LED turns green and the right LED turns orange.

3. Enter the 3-digit user slot for code assignment. ? ? ?

The left LED flashes green.

4. Enter the assignment digit for the current user slot:
   - **1** activates the Lock Strike relay only default
   - **2** activates the Auxiliary relay only
   - **3** activates the Lock Strike and Auxiliary relays

   If the assignment code is valid, the left LED stops flashing.

   The controller is now waiting for another slot number.

5. Do one of the following:
   - Press **#** to move to the next available user slot number.
   - Enter another 3-digit user slot number.

   If you do not wish to continue enrolling codes, press **#** twice and the controller returns to Normal mode.

5.15.2 Relay Code Assignment using Search Method

To assign the relay code using Search method:

1. Enter Programming mode.

2. Press **9** to enter Menu 9.

   The left LED turns green and the right LED turns orange.

3. Enter **000** for user slot access.

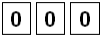

   The right LED flashes orange.

4. Do one of the following:
   - Enter the PIN code of the Primary code belonging to the user you want to delete.

     ? ? ? ?

   - Present the user card of the Primary code belonging to the user you want to delete.

     The left LED flashes green.

5. Enter the assignment digit for the current user slot:
   - **1** activates the Lock Strike relay only default
   - **2** activates the Auxiliary relay only
   - **3** activates the Lock Strike and Auxiliary relays

   If the assignment digit is *valid*, three beeps are heard and the controller returns to Normal mode.

   If the assignment digit is *invalid*, a long beep sounds and the controller waits for another assignment digit to be entered.

5.16 Changing PIN Code Length/Factory Default Settings

> **Warning** You must be very careful before using this command! Changing the PIN code length also erases the entire memory contents, including all user and special codes, and returns all codes to their factory default settings.

To change PIN code length:

1. Enter Programming mode.

2. Select the desired PIN code length as follows:
   - **00** – Returns to factory defaults and sets a 4-digit code
   - **05** – Returns to factory defaults and sets a 5-digit code
   - **06** – Returns to factory defaults and sets a 6-digit code
   - **08** – Returns to factory defaults and sets a 4-8 digit code

> **Note** When choosing the 4–8 option, please note that you should either enter zeros before the code, or press pound at the end (for example if your code is 12345, enter either **00012345** or **12345#**).

Both LEDs flash red.

3. Enter your 4-digit Programming code.

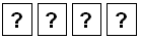

If the Programming code is valid, all memory is erased. You hear three beeps and the controller returns to Normal mode.

If the Programming code is invalid, you hear a long beep and the controller returns to Normal mode without erasing the memory contents.

5.17 Replacing a Programming Code

> **Note** The controller must be in Normal mode for the procedure to work. Ensure that the Mode indicator is green before proceeding.

To replace a Programming code:

1. Remove power from the controller.
2. Press and hold the REX button.
3. Apply power to the unit with the REX button pressed.
4. Release the REX button.
5. You now have 15 seconds to program a new programming code into the unit using the initial default code before the controller reverts to the existing code.

   The deafult code depends on the PIN length selected (see Table 2).

5.18 Replacing a Normal/Secure Code

> **Note** The controller must be in its Secure mode for the procedure to work. Ensure that the Mode indicator is red before proceeding.

To replace a Normal/Secure code:

1. Remove power from the controller.
2. Press and hold the REX button.
3. Apply power to the unit with the REX button pressed.
4. Release the REX button.
5. You now have 15 seconds to use the Normal/Secure code to return to the Normal mode.
6. Once in Normal mode, enter Programming mode to program a new Normal/Secure code.

   The deafult code depends on the PIN length selected (see Table 2).

A. Limited Warranty

The full ROSSLARE Limited Warranty Statement is available in the Quick Links section on the ROSSLARE website at www.rosslaresecurity.com.

Rosslare considers any use of this product as agreement to the Warranty Terms even if you do not review them.

This device complies with part 15 of the FCC Rules.
Operation is subject to the following two conditions:
(1) This device may not cause harmful interference, and
(2) This device must accept any interference received, including interference that may cause undesired operation.

Note: This equipment has been tested and found to comply with the limits for a Clas device, pursuant to Part 15 of the FCC Rules. These limits are designed to provide reasonable protection against harmful interference in a residential installation. This equipment generates,

NOTE: This equipment has been tested and found to comply with the limits for a Class B digital device, pursuant to Part 15 of the FCC Rules. These limits are designed to provide reasonable protection against harmful interference in a residential installation. This equipment generates uses and can radiate radio frequency energy and, if not installed and used in accordance with the instructions, may cause harmful interference to radio communications. However, there is no guarantee that interference will not occur in a particular installation.
If this equipment does cause harmful interference to radio or television reception, which can be determined by turning the equipment off and on, the user is encouraged to try to correct the interference by one or more of the following measures:

---Reorient or relocate the receiving antenna.

---Increase the separation between the equipment and receiver.

---Connect the equipment into an outlet on a circuit different from that to which the receiver is connected.

---Consult the dealer or an experienced radio/TV technician for help.

WARNING: Changes or modifications not expressly approved by the party responsible for compliance could void the user's authority to operate the equipment.

Asia Pacific, Middle East, Africa

Rosslare Enterprises Ltd.
Kowloon Bay, Hong Kong
Tel: +852 2795-5630
Fax: +852 2795-1508
support.apac@rosslaresecurity.com

United States and Canada

Rosslare Security Products, Inc.
Southlake, TX, USA
Toll Free: +1-866-632-1101
Local: +1-817-305-0006
Fax: +1-817-305-0069
support.na@rosslaresecurity.com

Europe

Rosslare Israel Ltd.
Rosh HaAyin, Israel
Tel: +972 3 938-6838
Fax: +972 3 938-6830
support.eu@rosslaresecurity.com

Latin America

Rosslare Latin America
Buenos Aires, Argentina
Tel: +54-11-4001-3104
support.la@rosslaresecurity.com

China

Rosslare Electronics (Shenzhen) Ltd.
Shenzhen, China
Tel: +86 755 8610 6842
Fax: +86 755 8610 6101
support.cn@rosslaresecurity.com

India

Rosslare Electronics India Pvt Ltd.
Tel/Fax: +91 20 40147830
Mobile: +91 9975768824
sales.in@rosslaresecurity.com

ROSSLARE
SECURITY PRODUCTS

TÜVRheinland CERT ISO 9001 ISO 14001

EN ISO 13485

RoHS COMPLIANT

0706-0960121+05