Pit ORION®	Pit ORION	Installation Data

IDENTIFICATION

Badger Meter Pit ORION Transmitters are available configuration for easy adaptation to the complete Badger® Recordall® Disc, Turbo, Compound Series, Fire Service, and Mag meter lines. The single pit design offers a factory prewired ORION module to either of Badger Meter's encoders, including the Recordall Transmitter Register (RTR®) or the Absolute Digital Encoder (ADE®).

Each Pit ORION transmitter can be identified using the unique eight-digit serial number located on a tag attached to the wire harness. At the end of the serial number a letter 'M' or 'N' appears. This alpha character represents whether the transmitter is for Metal (M) or Nonmetal (N) pit lid applications. Each Badger Meter encoder is clearly identified on the face of the register with an assembly number, unit of measure and meter model (see figure 1). It is essential that the correct transmitter is used for the correct pit lid application. Failure to do so will result in a violation of FCC regulations.

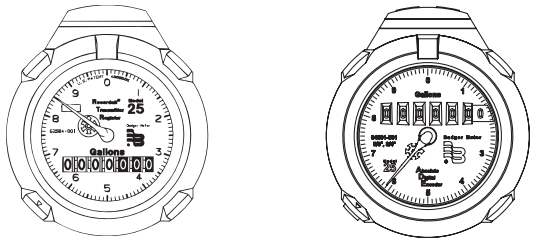

Recordall Transmitter Register (RTR®) | Absolute Digital Encoder (ADE™)

Figure 1

ORION Pit Installation Kits

Through Lid Installation Kit	64394-001
Below Lid with Knuckles	64394-003
Vault Installation Kit	64394-008
Armorcast Installation Kit	64394-009

INSTALLATION

UNPACKING

Carefully remove the prewired pit ORION transmitter and encoder from the shipping carton and inspect the assembly for damage. Retain the contents of the installation kit for use in mounting the pit transmitter in the field. Prior to installing any pit ORION transmitter, it is important to determine whether it should be installed in a pit with a metal or nonmetal lid. To determine the type of pit ORION transmitter, look at the serial number tag attached to the wire harness. At the end of the serial number, either a 'M' for metal or an 'N' for nonmetal will designate the proper lid application for the transmitter.

After determining the proper application, the ORION pit transmitter can be installed either through or beneath the lid. An installation kit is provided with each transmitter for mounting through or beneath a pit lid. Note that the ORION transmitter should not be mounted through the lid in applications where vehicle traffic and exposure to snow plow blades and other objects may damage the ORION transmitter.

PIT ORION INSTALLATION

The Pit ORION Transmitter (see Figure 2) is shipped prewired to the Badger Meter encoder for single pit configurations. Due to the factory prewired shipment, there is no splicing required and only the mounting of the register with tightening of the Torx seal screw is necessary. Excess wire should be coiled up inside the pit and cable tied to avoid any damage.

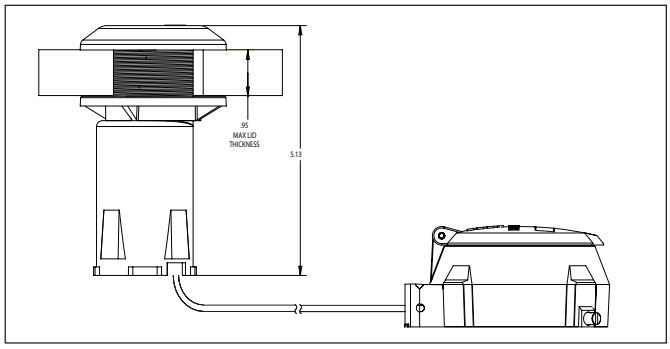

Figure 2 Identification - Pit ORION Transmitter

ORION Pit transmitters can be mounted through or below the pit lid. See figures 2 and 4 for details. For below the lid installations, a special mounting bracket (figure 3) is available. This mounting bracket is designed for use with 3/8", 1/2" and 5/8" rebar or 1/2" schedule 40 PVC pipe.

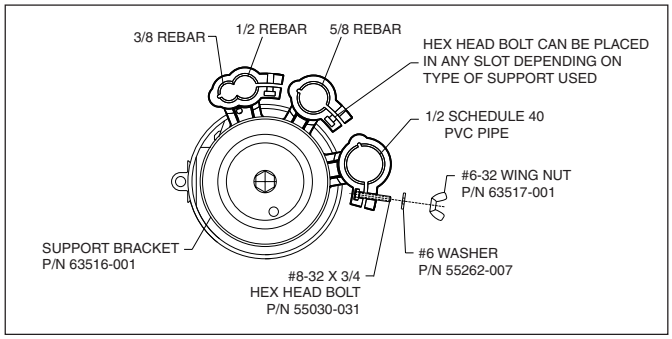

Figure 3 Identification - Pit Mounting Bracket - Top View

⚠CAUTION

To install, drive rebar or stake into the ground prior to attaching Pit ORION Transmitter to avoid damage. Once in the ground, secure the mounting bracket on the appropriate rebar or pipe using the enclosed washer, wing nut and hex head bolt provided with the bracket. Insert the Pit ORION Transmitter through the bracket and thread the locking nut to secure the ORION transmitter (see Figure 4). **For best results mount the Pit Transmitter approximately 1-2" below the underside of the lid.**

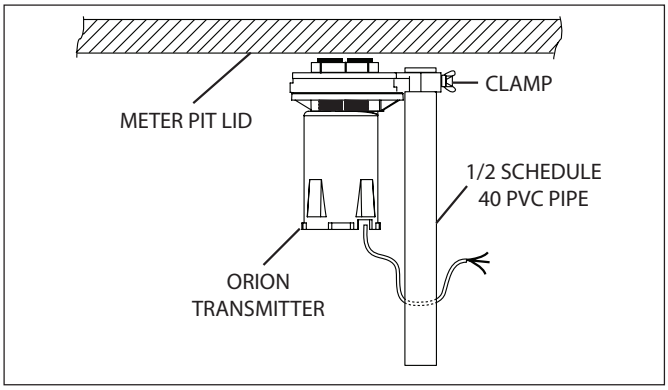

Figure 4 Identification - Pit ORION Beneath Lid Installation

Deep Vault Installation

When installation of the ORION Pit Transmitter occurs in a deep vault, Badger offers a kit that can be used to mount the transmitter to the side of the vault. To install, mount the 'C' clamp on the side of the vault. Select a location close to the top of the vault that will not be damaged when access to the meter is required. Place the tape, supplied in the installation kit, around the transmitter approximately ½" from the top of the transmitter. Thread the locking ring on the transmitter until it makes contact with the tape. Insert the transmitter into the 'C' clamp. Close the 'C' clamp and lock it in place so that it closes over the tape and securely holds the transmitter.

NOTE: *ORION Radio Transmitters perform best with a clear line of sight. Performance varies by installation and lid construction.*

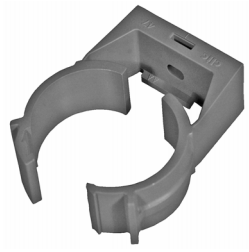

Figure 5
C Clamp

Figure 6
C Clamp around Transmitter

ORION®, Recordall®, RTR®, and ADE®, are registered trademarks of Badger Meter, Inc. TORX® is a registered trademark of Camcar, Division of Textron, Inc.

Armorcast Installation

ORION Pit Transmitters can also be installed in composite and plastic lids like Armorcast. An installation kit for installing an ORION Pit Transmitter to the lid is available. To install an ORION transmitter to a composite or plastic lid, thread the locking ring onto the top of the ORION Transmitter. Slide the transmitter into the mounting bracket. Thread the locking ring so that the transmitter is held firmly in place.

Badger Encoder Register Installation

Install an RTR® or ADE® on the water meter and secure it using either the Torx® screw or standard seal screw provided.

TESTING

RTR Transmitter

Once the Pit ORION Transmitter is securely installed and the RTR is mounted on the water meter, the ORION system is ready for operation. Run water through the meter to increment the RTR 1/10th of the test circle. Upon receiving the first digital signal from the RTR, the transmitter counts the signal and begins its radio frequency transmissions. No specific testing of the wiring or programming of the transmitter is required. Reading each pit transmitter immediately after installation verifies proper operation and reading performance. ORION reading equipment only can be used to read installed ORION Transmitters.

ADE Transmitter

Once the ADE is assembled to the meter and the ORION transmitter is installed, the transmitter is ready for operation. The user can either let the transmitter automatically turn itself on by rolling the ADE number wheels to all zeros or by turning on the transmitter with the handheld or mobile reading equipment. Since the ADE transmitter updates its reading from the ADE once an hour, it may take up to one hour after the ADE number wheel stack rolls to all zeros for the transmitter to begin broadcasting. In either case, no specific testing or programming of the transmitter is required. Reading each pit transmitter after it has been installed verifies proper installation and reading performance.

LICENSE REQUIREMENTS

This device complies with Part 15 of the FCC Rules. Operation of this device is subject to the following two conditions: (1) This device may not cause harmful interference, and (2) this device must accept any interference received, including interference that may cause undesired operation. Any changes made by the user not approved by Badger Meter can void the user's authority to operate the equipment. No license is required by the utility to operate an ORION meter reading system.

TÜV MANAGEMENT SERVICE ISO 9001

Please see our website at
www.badgermeter.com
for specific contacts.

Due to continuous research, product improvements and enhancements, Badger Meter reserves the right to change product or system specifications without notice, except to the extent an outstanding contractual obligation exists.

BadgerMeter, Inc.
P.O. Box 245036, Milwaukee, WI 53224-9536
(800) 876-3837 / Fax: (888) 371-5982
www.badgermeter.com

Copyright © Badger Meter, Inc. 2006. All rights reserved.