Badger Meter

# GALAXY® II Gateway Receiver

## Fixed Network

GXY-UM-00760-EN-FCC (February 24, 2014 11:13 AM)

# Installation Manual

# CONTENTS

OVERVIEW . . . . . 5
Product Description . . . . . 5
License Requirements . . . . . 5
Product Unpacking and Inspection. . . . . 5
SPECIFICATIONS . . . . . 6
TYPE OF INSTALLATION . . . . . 7
MOUNTING THE GATEWAY . . . . . 8
Installation Considerations . . . . . 8
Gateway Standard Components . . . . . 9
Tools and Materials (customer-supplied) . . . . . 10
Using the V-block Clamps. . . . . 10
Banding Mounting . . . . . 12
ELECTRICAL CONNECTIONS . . . . . 14
AC Power . . . . . 14
M12 Connector Assembly. . . . . 14
ELECTRICAL / NETWORK INSTALLATIONS . . . . . 17
Access to Power . . . . . 17
Use of a NEMA 4 Enclosure . . . . . 17
GPRS Recommended Installation . . . . . 17
LAN Recommended Installation. . . . . 18
DC Power Source Installation . . . . . 19
RJ45 Plug Assembly (for LAN connectivity only). . . . . 21

# OVERVIEW

This manual contains installation and programming instructions for the GALAXY® II gateway receiver.

Proper performance and reliability of the gateway receiver depends upon installation in accordance with these instructions.

## Product Description

The GALAXY II gateway receiver ("gateway") is an easy-to-install, easy-to-deploy unit that collects metering data from the GALAXY TR3 meter endpoints in the area. The gateway uses a cellular or LAN network backhaul to send the requested metering data back to the utility where the data can be used to better manage the utility's operation and provide important data for improved customer service and utility operations. The ReadCenter® reading data management software manages this data transfer process and includes many tools and standard reports, as well as the ability to create user-defined reports.

## License Requirements

This device complies with section 15 and 247 as an unlicensed transmitter and as a part 15 unintentional radiator.

This device complies with part 15 of the FCC Rules. Operation is subject to the following two conditions: (1) This device may not cause harmful interference, and (2) this device must accept any interference received, including interference that may cause undesired operation."

In accordance with FCC regulations, "Code of Federal Regulations" Title 47, Part 2, Subpart J, Section 1091, transmitters pass the requirements pertaining to RF radiation exposure. However, to avoid public exposure in excess of limits for general population (uncontrolled exposure), a 20-centimeter distance between the transmitter and the body of the user must be maintained during testing.

No FCC license is required by a utility to operate a GALAXY II gateway system.

This device complies with Industry Canada license-exempt RSS standard(s). Operation is subject to the following two conditions: (1) this device may not cause interference, and (2) this device must accept any interference, including interference that may cause undesired operation of the device.

Le présent appareil est conforme aux CNR d'Industrie Canada applicables aux appareils radio exempts de licence. L'exploitation est autorisée aux deux conditions suivantes : (1) l'appareil ne doit pas produire de brouillage, et (2) l'utilisateur de l'appareil doit accepter tout brouillage radioélectrique subi, même si le brouillage est susceptible d'en compromettre le fonctionnement.

**IMPORTANT**

***Changes or modifications to the equipment that are not expressly approved by Badger Meter could void the user's authority to operate the equipment. Only properly trained and authorized personnel should install and/or maintain this equipment.***

## Product Unpacking and Inspection

Upon opening the shipping container, visually inspect the product and applicable accessories for any physical damage such as scratches, loose or broken parts, or any other sign of damage that may have occurred during shipment.

**NOTE:** If damage is found, request an inspection by the carrier's agent within 48 hours of delivery and file a claim with the carrier. A claim for equipment damage in transit is the sole responsibility of the purchaser.

# SPECIFICATIONS

## IMPORTANT

***The GALAXY II gateway receiver is functionally equivalent to the previous GALAXY gateway receiver. However, the physical configuration of the new enclosure is different. This change affects installation considerations, including cabling, size, weight and wind load area. Make sure to consider these variables in your evaluation of an installation location.***

| | |
|---|---|
| **Installation** | 1.25…2.5" outside diameter pole mount: Aluminum V-blocks<br>2.5…24" outside diameter pole mount: BAND-IT® mounting bands |
| **Size** | Height: 21" (includes antennas)<br>Width: 36"<br>Depth: 6" |
| **Weight** | 11.5 lb |
| **Enclosure** | Sealed, metallized fiberglass reinforced polyester (FRP) enclosure |
| **Color** | Silver/gray |
| **Operating Temperature** | –30…60° C (–22…140° F) |
| **Storage Temperature** | – 40…85° C (– 40…185° F) |
| **Backhaul Options** | CDMA with LAN<br>GPRS with LAN<br>LAN with power<br>LAN with PoE |
| **Power Supply** | DC voltage, 24V DC (AC adapter provided)<br>PoE alternative available for LAN<br>Solar may be used provided it meets DC requirements |
| **Wind Loading Area** | 2.0 $ft^2$ |
| **Programming** | Locally: via programming harness |

# TYPE OF INSTALLATION

## New

If this is a new installation, follow the installation procedures in this document, beginning with "Mounting the Gateway" on page 8.

## Replacement

If this is a replacement of an existing GALAXY gateway receiver, review the following information before starting installation.

- Verify that your existing infrastructure is rated for the weight and wind load area of the gateway.

| | GALAXY Gateway Receiver 3.0 | GALAXY II Gateway Receiver |
|---|---|---|
| **Weight** | 6.5 lb | 11.5 lb |
| **Wind Loading Area** | 1.2 $ft^2$ | 2.0 $ft^2$ |

- Be aware that you may need to replace the existing power cable and power supply.
  - If your existing gateway has a gray power cable and 12V power supply (*Figure 1)*, replace them with the 24V power supply (*Figure 2)*, which is included in the GALAXY II gateway packaging. You cannot re-use the cabling shown in *Figure 1*.
  - If your existing gateway has the cable and power supply shown in *Figure 2*, you can re-use it, but you must also wire the M12 connector for the GALAXY II gateway. The black cable does not wire directly to the board.

*Figure 1: Gray cable and 12V power supply*

*Figure 2: Black cable and 24V power supply*

  - If your existing gateway connects via LAN, you **cannot re-use the Serial-to-LAN adapter** *(Figure 3)* for the GALAXY II gateway receiver. You must replace the adapter with an ethernet cable.

*Figure 3: Serial-to-LAN adapter kit*

# MOUNTING THE GATEWAY

## IMPORTANT

***Receiver installation, mounting and disposal shall be in accordance with all local, state and federal regulations. When installing the receiver, customer is responsible for complying with local, state, and federal codes and guidelines, as well as applicable industry standards, such as ANSI/TIA/EIA 222 (structural standards for steel antenna towers and antenna supporting structures) and the National Electrical Code (NEC). Proper grounding is necessary, and in the case of a wooden pole, a dedicated copper ground wire should be used for lightning protection.***

## Installation Considerations

**NOTE:** The utility is responsible for properly positioning the gateway. For optimum reception, locate the network gateway receiver and antennas in line-of-sight view of the desired endpoints.

To help maximize the performance of your GALAXY fixed network system, the following installation guidelines and recommendations should be considered when selecting mounting locations for network gateway receivers.

The utility is responsible for properly positioning the network gateway receiver. For optimal reception and transmission, locate the network gateway transceiver and antennas in line-of-sight view of the desired endpoints.

- Avoid installing the gateway next to or between objects such as tall buildings, towers, bridges, highway overpasses or signs that obstruct line of sight with the endpoints.
- Avoid installing the gateway near RF transmitters or other sources of RF radiation including high-power in band and near-power sources such as 450…470 MHz SCADA transmitters and communications transmitters. Other potential sources of RF radiation include power line transformers, neon or fluorescent signs, and RADAR transmitters. If the gateway is to be located near other RF radiators, a minimum distance of 100 feet horizontal separation and 10 feet vertical separation must be maintained between the gateway and the source of RF radiation.
- Avoid installing the gateway antennas inside metal enclosures or inside of a building as the antennas cannot communicate if surrounded by metal.
- Mount the gateway as high above average terrain as possible and maintain a 360 degree view of the horizon.
- Minimum standoff distance of 2 feet from any structure is required.
- Position the gateway no closer than 25 feet from the nearest endpoint.

## Gateway Standard Components

- One GALAXY II gateway receiver with attached mounting backplate and antennas.
- V-block clamps or banding and locking equipment for attaching a gateway receiver to a pole.
- 100-foot or 300-foot power cable, M12 connector, AC-to-DC power supply and power cord.

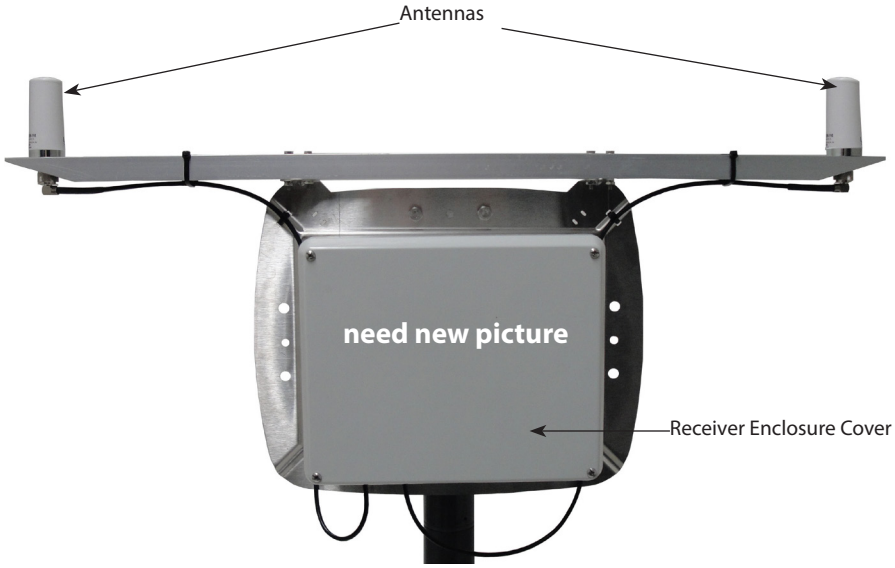


*Figure 4: Gateway components (GPRS unit shown)*

## Tools and Materials (customer-supplied)

- Precision slotted screwdriver 2.4 mm (0.094 inch) blade size
- Two 9/16 inch or adjustable wrenches for mounting V-block clamps (standard mounting)
- Band-IT® tool (refer to page 11) and instructions, a 1/2 inch wrench and a hammer for large diameter pole mounting
- Wrench for 1-1/16 inch gland nut and 1-1/16 inch dome nut
- Strap wrench for backhaul antenna

## Using the V-block Clamps

The V-block mounting equipment is sized to mount the gateway on a vertical or horizontal pole with outer diameters ranging from 1-1/4…2-1/2 inches. For mounting on poles larger than 2-1/2 inches, refer to "Banding Mounting" on page 12.

1. Open the bag of mounting equipment.
2. Place two bolts (3/8-16 x 5 inches) through the holes in the top of the gateway mounting backplate (*Figure 5*). Use the side holes for horizontal installation.
3. Place a clamp onto the bolts, as shown below.
4. Place a lock washer and nut onto each bolt, as shown below.

**NOTE:** The lock washer and nut nearest the enclosure mounting bracket may be omitted when mounting on smaller diameter poles to provide additional clamping distance.

*Figure 5: Attach hardware*

5. Tighten the two nuts with a 9/16-inch or adjustable wrench, so that each lock washer is fully compressed and flat.
6. Repeat Steps 2 through 5, attaching a clamp to the bottom of the mounting backplate. Position the gateway on the pole and place a clamp on the top bolts.

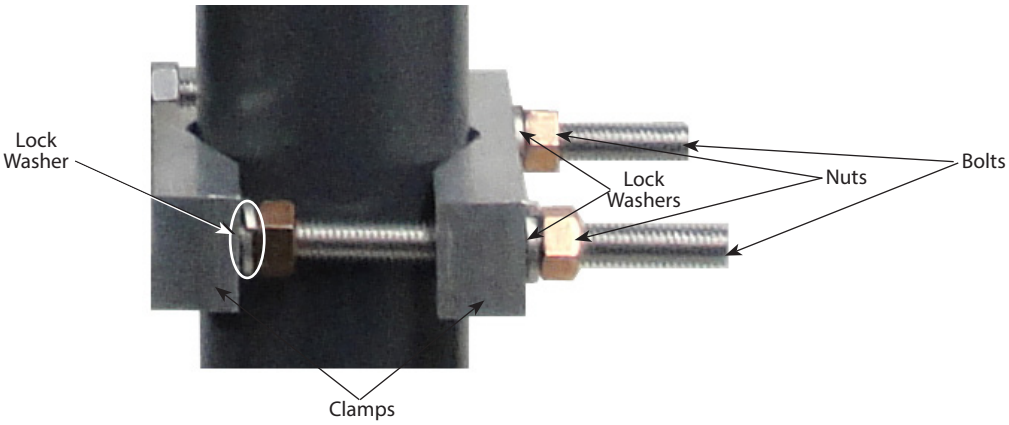


*Figure 6: Receiver positioning and clamps*

7. Place a lock washer and nut on each bolt and tighten the nuts 100…150 inch-pounds to ensure the gateway is sufficiently secured to the pole.
8. Repeat Steps 6 and 7 for attaching the V-block clamp mounting bracket hardware to the bottom bolts of the gateway mounting backplate.

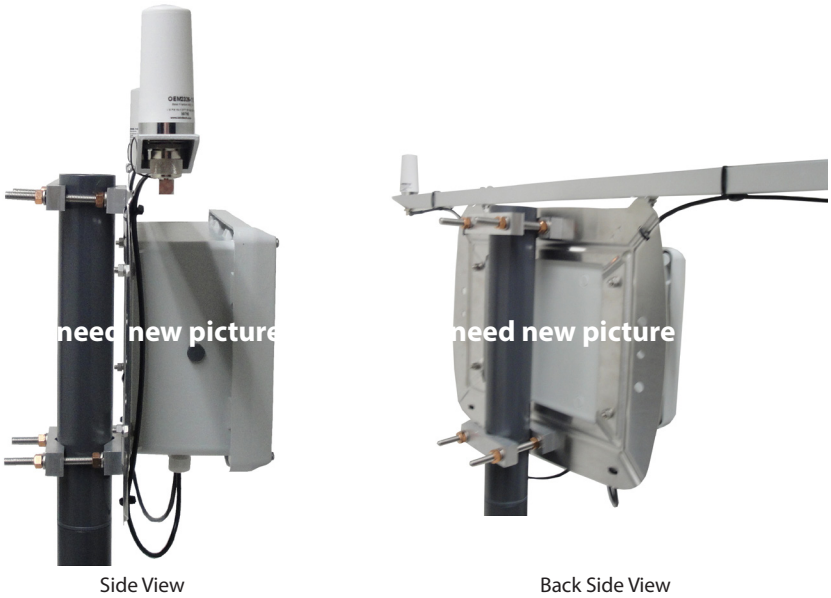


*Figure 7: Completed gateway mounting (GPRS unit shown)*

## Banding Mounting

Banding mounting equipment is sized to mount the gateway on a 2-1/2…24-inch outer diameter pole.

### IMPORTANT

***When using the banding mounting kit for the network gateway receiver, use BAND-IT® Idex installation practices. Refer to www.band-it-idex.com/en/Literature/Tool_Instructions/P05886.pdf for more information. This is especially applicable when mounting on a non-tapered vertical pole, as the banding could loosen over time resulting in the unit sliding down the pole.***

To mount the gateway on a pole, gather the banding and locking equipment.

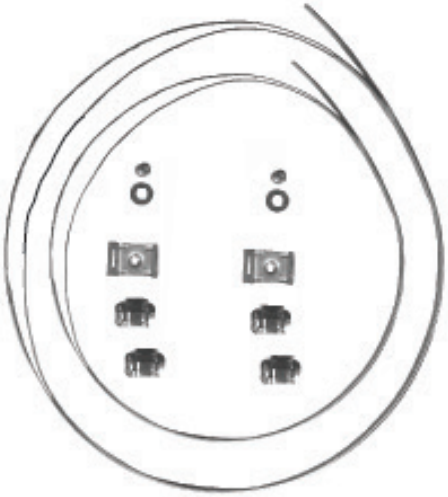

*Figure 8: Banding and locking equipment*

**NOTE:** Installation of banding mounting kit requires use of the BAND-IT tool shown below (66042-006) or equivalent BAND-IT tool as recommended by BAND-IT.

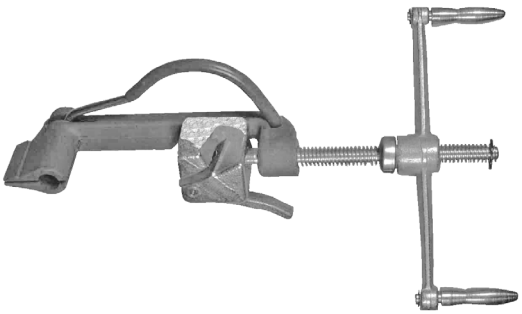

*Figure 9: BAND-IT tool*

1. Locate the BAND-IT tool and supplied installation instructions.
2. Follow the BAND-IT-supplied installation instructions enclosed with the BAND-IT tool for attaching the network gateway receiver to a pole.
3. Using a 1/2-inch wrench, the recommended torque for the 5/16-24 screw that attaches the gateway bracket to the BAND-IT banding is 144…168 inch-pounds (12…14 foot-pounds).

*Figure 10: Gateway shown with BAND-IT mounting hardware*

# ELECTRICAL CONNECTIONS

## AC Power

Badger Meter provides an AC-to-DC power supply with power cord that plugs into a standard three-prong 120V AC outlet. If powering the gateway directly via DC power, please refer to the DC power information on page 19.

*Figure 11: 120V AC power supply with power cord*

## M12 Connector Assembly

**NOTE:** Use only approved Badger Meter power cable, 100-feet (66233-010) or 300-feet (66233-013) for this assembly.

### Tools and Materials

- M12 plug, 8-conductor connector (66525-002)
- Badger Meter power cable, 100 feet or 300 feet with 308 in-line connector end
- 308 in-line connector anti-tamper collar
- Outdoor-rated Cat5e Ethernet cable (LAN gateways only) (customer supplied)
- Coax stripper (customer supplied)
- Wire stripper for 22 AWG wires (customer supplied)
- Precision slotted screwdriver with blade size of 2.4 mm (0.094") (customer supplied)

### M12 Plug Connector Part Names

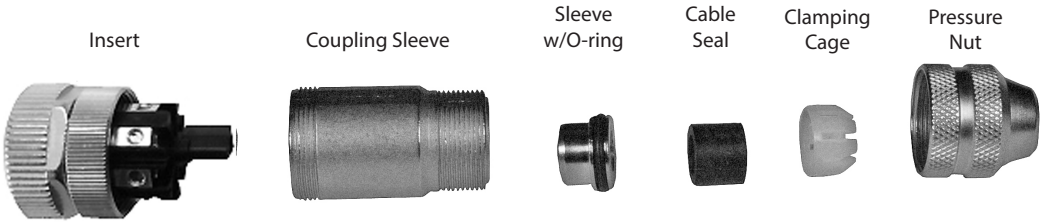


*Figure 12: M12 plug connector parts*

1. Push the connector parts onto the power cable in the following order: pressure nut, clamping cage, cable seal, sleeve with O-ring and finally, the coupling sleeve.
2. Strip the cable outer jacket to a maximum length of 1.1 inches.

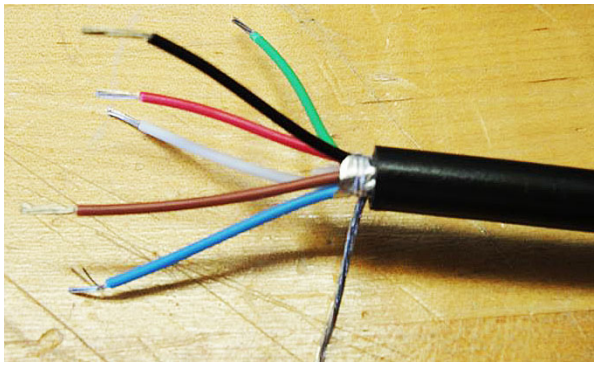

*Figure 13: Stripped cable wires*

3. Shorten the foil shield flush with the outer jacket.
4. Strip the ends of the six (6) colored wires to a length of 1/8 inch. Twist the conductors on each wire.
5. Shorten the drain/bare wire (no insulation) to 11/16 inch.
6. Loosen each screw (about 2…3 turns) on the female insert and attach the wires to the insert using the chart below. Retighten each screw after the wire has been connected.

| Function | Wire | Female insert connector |
|---|---|---|
| RS232 | White | 4 |
| V DC– | Drain | 8 (center) |
| V DC– | Black | 3 |
| V DC+ | Blue | 7 |
| V DC+ | Red | 1 |
| RS232 | Green | 5 |
| V DC– | Brown | 2 |
| Not used | Not used | 6 |

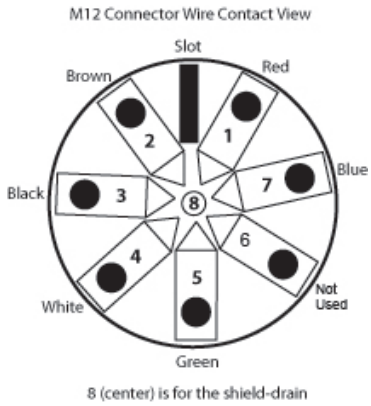


Female Insert Diagram - Top View

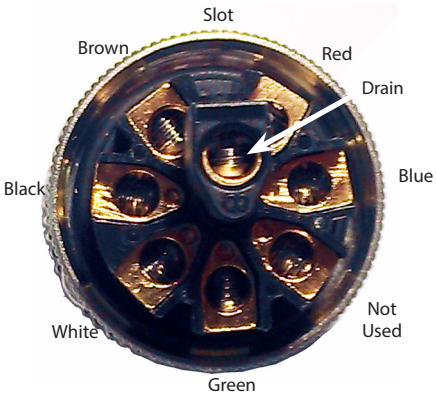


Female Insert Photo - Top View

** Used with the serial programming harness ( 66529-002)*

***For use with shielded cable only*

7. Assemble the insert by aligning the female insert tab slot with the notch in the coupling sleeve.

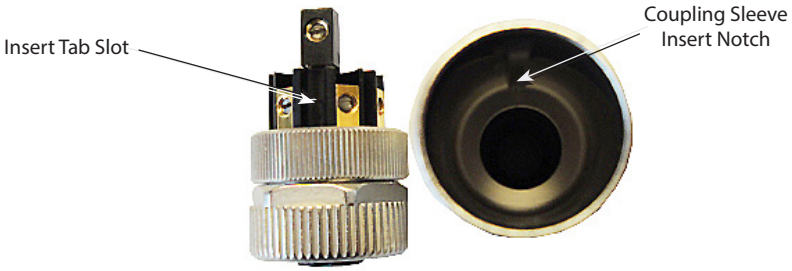


*Figure 14: Slot alignment*

*Figure 15: Bottom of gateway receiver*

8. Remove the M12 cap from the M12 receptacle on the bottom of the network gateway receiver and discard the cap.
9. Connect the M12 plug connector assembly to the M12 receptacle and tighten the locking ring in a clockwise direction until finger tight.
10. Connect the 308 connector on the other end of the power cable to the 308 connector of the AC-to-DC power supply and snap the anti-tamper collar over the connection.
11. Connect the power cord to the power supply and then plug the three prong male end of the power cord into a 120V AC power source. The LED indicator above the M12 connection turns on with a steady green light, indicating the gateway power is on (*Figure 16*).

    **NOTE:** A red blinking light indicates the gateway is on internal backup battery power. No light indicates the gateway is not receiving power.

*Figure 16: Powered gateway*

The M12 connection is complete.

# ELECTRICAL / NETWORK INSTALLATIONS

## Access to Power

- The gateway requires access to power and can use either a 120V AC grounded outlet for use with the AC-to-DC power supply and power cord (66528-003), or a DC power source to be used with the DC power source cable with 308 in-line connector. For a gateway with a LAN PoE configuration, a Power over Ethernet connection is required.
- Outlet and enclosure (if required) should be mounted for easy accessibility by authorized utility personnel at the installation site.
- Consult appropriate electrical, building and industry codes, regulations and standards for accepted installation practices for use of the AC-to-DC power supply and outlet in environmentally controlled indoor locations.

## Use of a NEMA 4 Enclosure

AC-to-DC power supply used outdoors or in a non-environmentally controlled indoor location requires a customer-supplied NEMA 4 enclosure, or equivalent, be installed in accordance with appropriate electrical codes, building codes, industry codes, regulations and standards.

## CDMA or GPRS Recommended Installation

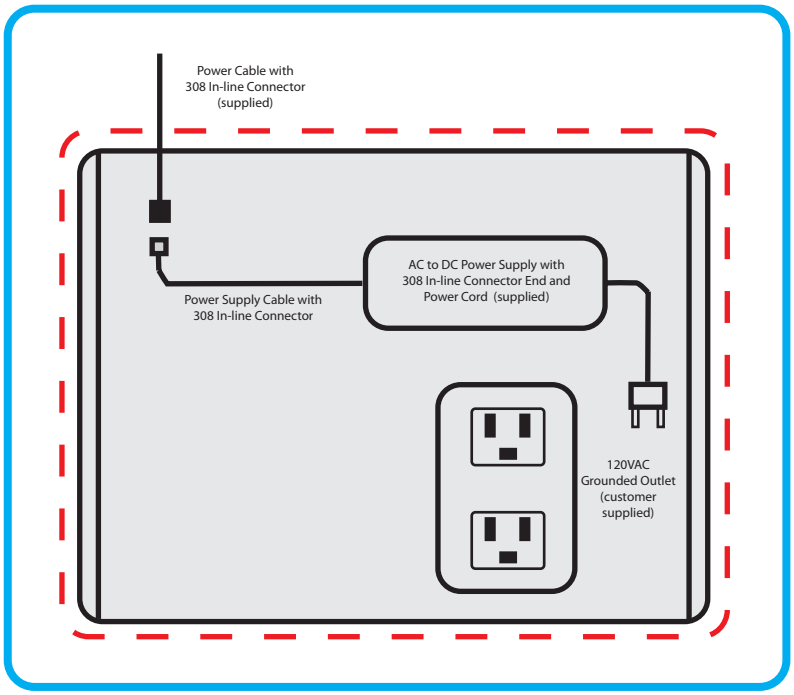


*Figure 17: CDMA or GPRS connection with AC power source (*Shown with NEMA 4 enclosure)*

*An enclosure may be recommended but is not included.

If NEMA 4 enclosure or equivalent is required, the minimum enclosure size is 12" x 10" x 6" (H x W x D).

## LAN Recommended Installation

**NOTE:** Consult manufacturer's installation and usage recommendations as well as appropriate codes, regulations and standards for the LAN RJ45 Ethernet connection.

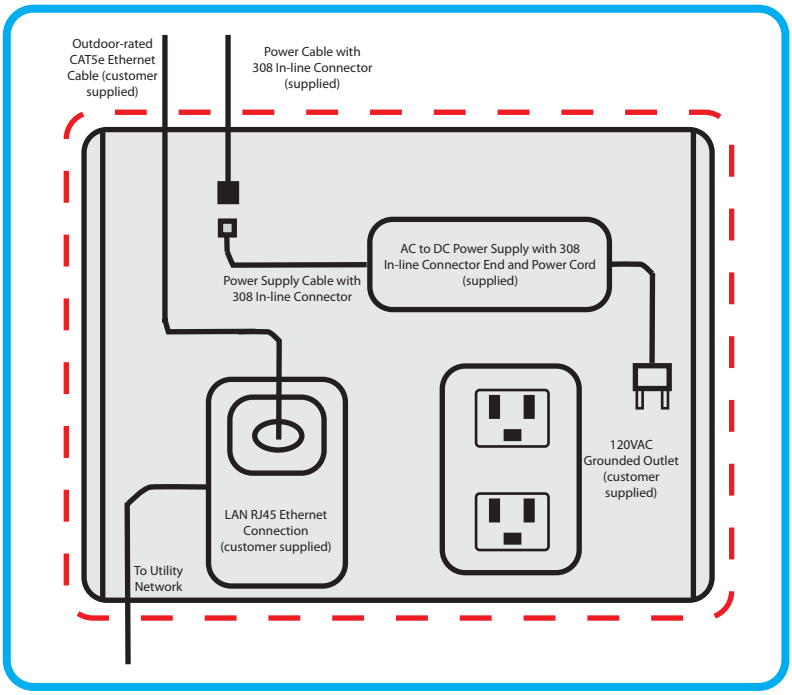


*Figure 18: LAN connection with AC power source (*Shown with NEMA 4 enclosure)*

*An enclosure may be recommended but is not included.

## DC Power Source Installation

The gateway can be ordered with a 10-foot DC power source cable (66233-020) for direct connection with a customer-supplied DC power source. The power requirements for the gateway are a DC voltage source between 12…24 V DC. Power cable lengths may be limited by the voltage of the DC source. Current consumption requirements will vary with the type of DC source as follows:

- When connecting to a switching AC/DC power source, as with an AC-to-DC power supply, the electrical requirement is 500 mA (minimum) @ 15V DC and may be used with a Badger Meter power cable length up to 300 feet long (66233-013).
- When connecting directly to batteries, as in the case of a solar assembly, the electrical requirement is 300 mA (minimum) @ 12V DC. However, when using 12V DC, the maximum length of the Badger Meter power cable is limited to 100 feet (66233-010) due to voltage drop.

*Figure 19: 10' DC power cable*

**NOTE:** Consult appropriate electrical, building and industry codes, regulations and standards for accepted installation practices when attaching the cable to a DC power source.

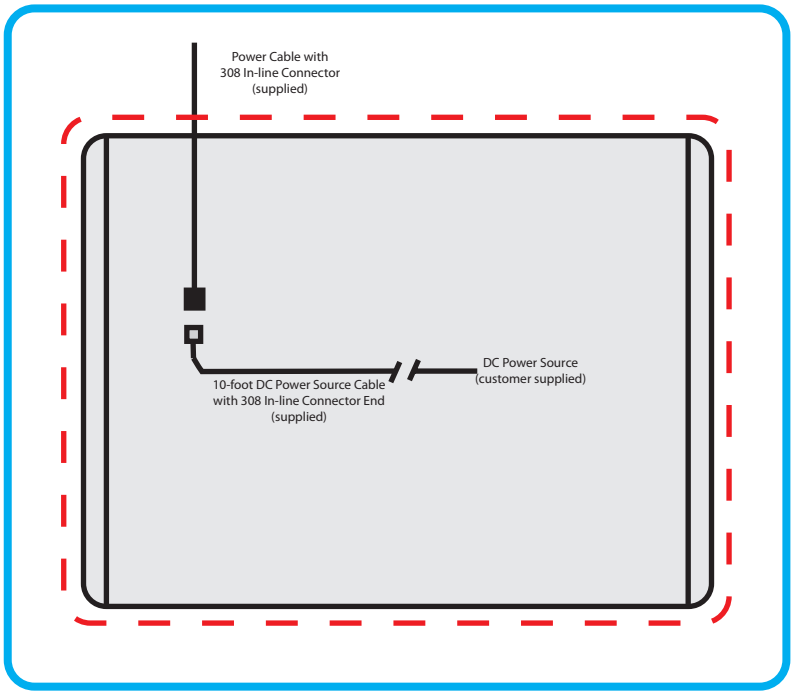


*Figure 20: CDMA or GPRS connection with DC power source (* Shown with NEMA 4 enclosure)*

*The enclosure may be recommended but is not included.

## External DC Power Source Connections

| Wire Color for 66233-020 | External DC Power Source |
|---|---|
| Drain (no insulation) | Negative (–) |
| Black | Negative (–) |
| Brown | Not needed/cut off |
| Red | Positive (+) |
| Light Blue | Not needed/cut off |

## RJ45 Plug Assembly (for LAN connectivity only)

**NOTE:** Do *not* use a serial-to-LAN adapter!

*Figure 21: Serial-to-LAN adapter kit*

**Required Supplies:**

- RJ45 Plug Assembly (66527-001)
- Ethernet cable cord set using outdoor rated Cat.5e cable and RJ45 jack (customer supplied)
- Wrenches, 1-1/16 inch (customer supplied)

Metallic Housing Insulator | Insert Halves | Cable Gland

*Figure 22: RJ45 plug components*

1. Feed the cord set cable through the dome nut end of the cable gland.
2. Push down the RJ45 plug latch and place it inside one half of the insulator insert.

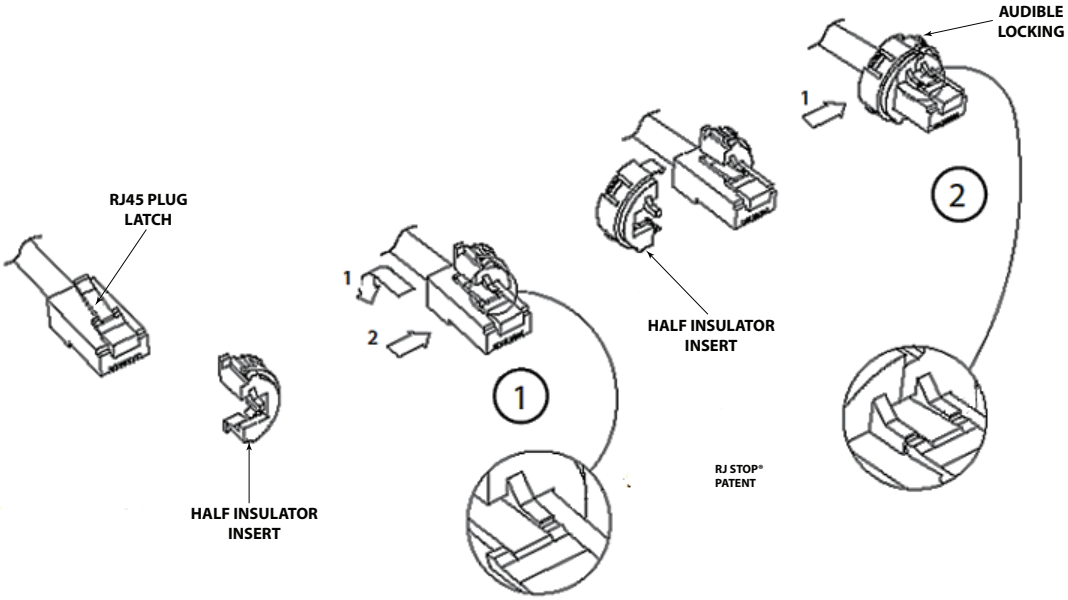


*Figure 23: Insulator assembly*

3. Attach the other half of the insulator insert as shown. You will hear a ”click“ when the connection is made.

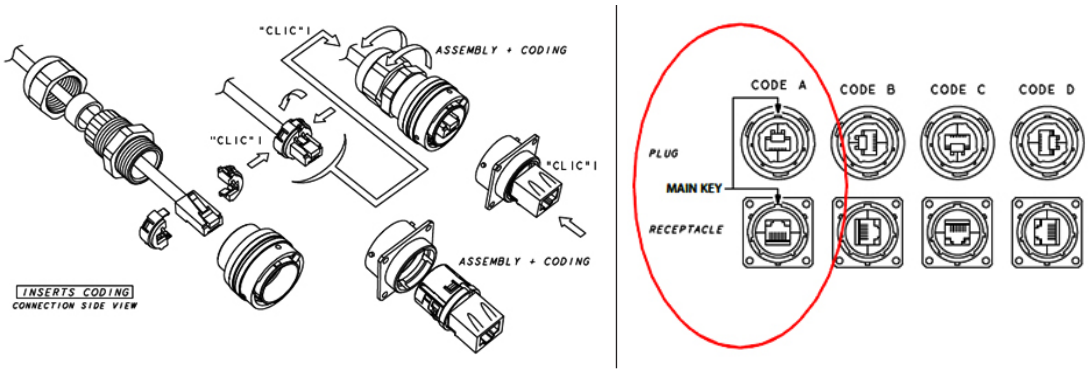


*Figure 24: RJ45 plug assembly with Code A orientation*

4. Insert the insulator assembly into the metallic housing using the Code A orientation as shown in *Figure 24*. You will hear a "click" to confirm a complete connection.

**NOTE:** Code A orientation must be used or the plug will not fit into the receptacle. Assembled RJ45 plugs cannot be disassembled without a special tool (67163-001) and must be replaced.

5. Screw the cable gland into the metallic housing and tighten the cable gland nut to 30…45 inch-pounds using wrenches.
6. Tighten the dome nut to 20 inch-pounds using a wrench. The dome nut seal must be in firm contact with outdoor rated Cat.5e Ethernet cable.
7. Remove the bayonet lock cap from the RJ45 receptacle on the gateway enclosure by turning the cap 1/4 turn, counter-clockwise.

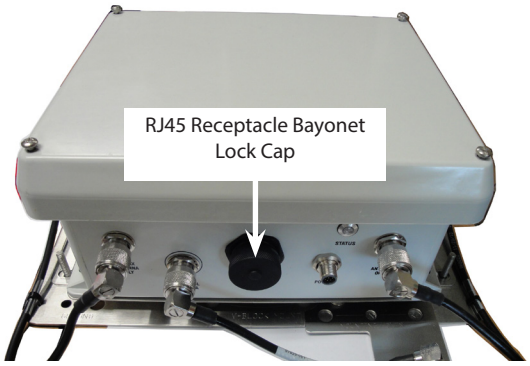


*Figure 25: RJ45 receptacle bayonet lock cap (LAN with power shown.)*

8. Connect the RJ45 plug assembly to the RJ45 receptacle and secure by turning the metal housing 1/4 turn, clockwise.

**NOTE:** Do not use a serial-to-LAN adapter on the GALAXY II gateway receiver

For additional information, refer to *http://www.rjfield.com/ethernet_connectors_rjf_en.htm*.

INTENTIONAL BLANK PAGE

GALAXY is a registered trademark of Badger Meter, Inc. Other trademarks appearing in this document are the property of their respective entities.
Due to continuous research, product improvements and enhancements, Badger Meter reserves the right to change product or system specifications without notice, except to the extent an outstanding contractual obligation exists. © 2014 Badger Meter, Inc. All rights reserved.

**www.badgermeter.com**

**The Americas | Badger Meter |** 4545 West Brown Deer Rd | PO Box 245036 | Milwaukee, WI 53224-9536 | 800-876-3837 | 414-355-0400
**México | Badger Meter de las Americas, S.A. de C.V. |** Pedro Luis Ogazón N°32 | Esq. Angelina N°24 | Colonia Guadalupe Inn | CP 01050 | México, DF | México | +52-55-5662-0882
**Europe, Middle East and Africa | Badger Meter Europa GmbH |** Nurtinger Str 76 | 72639 Neuffen | Germany | +49-7025-9208-0
**Czech Republic | Badger Meter Czech Republic s.r.o. |** Maříkova 2082/26 | 621 00 Brno, Czech Republic | +420-5-41420411
**Slovakia | Badger Meter Slovakia s.r.o. |** Racianska 109/B | 831 02 Bratislava, Slovakia | +421-2-44 63 83 01
**Asia Pacific | Badger Meter |** 80 Marine Parade Rd | 21-04 Parkway Parade | Singapore 449269 | +65-63464836
**China | Badger Meter |** Rm 501, N° 11 Longyue Apartment | N° 180 Longjin Rd, Jiuting Songjiang District | Shanghai, China | 201615 | +86-21-5763 5412