Badger Meter

ORION®
Water Endpoint

IMPORTANT:
This manual contains important information.
READ AND KEEP FOR REFERENCE.

ORI-I-79 (11-11)
62014-144 Rev. 2

Installation Data

CONTENTS

Overview 5
Product Unpacking and Inspection 5
License Requirements 5
Identification 6
Network Endpoint Installation 7
Splicing Considerations 7
ORION Installation Kit Part Numbers 7
Pit Installation 8
Through the Lid Installation Kit (SE, ME and CE Endpoints) 8
Below Lid with Knuckles Installation Kit (ME and CE Endpoints) 9
Integrated Pit Lid Hanger Installation Kit (ME and CE Endpoints) 10
Vault Installation Kit (ME and CE Endpoints) 10
Remote Installation 11
Remote Wall Mount Box Enclosure Kit (SE, ME and CE Endpoints) 11
Remote Installation Bracket Kit (SE, ME and CE Endpoints) 14
Wiring a Universal Endpoint 17
Universal Endpoint Identification 17
Required Splice Tools 17
Wiring the ORION Universal Endpoint to an Encoder 17
Encoder Register Installation 19

Overview

This manual contains installation and programming instructions for the ORION® water endpoint.

Proper performance and reliability of ORION endpoints depend upon installation in accordance with these instructions.

Product Unpacking and Inspection

Upon receipt of the product, perform the following unpacking and inspection procedures.

> **NOTE**: If damage to the shipping container is evident upon receipt, request the carrier to be present when the product is unpacked.

Carefully open the shipping package, follow any instructions that may be marked on the exterior. Remove all cushioning material surrounding the product and carefully lift the product from the package.

Retain the package and all packing material for possible use in reshipment or storage.

Visually inspect the product and applicable accessories for any physical damage such as scratches, loose or broken parts or any other sign of damage that may have occurred during shipment.

> **NOTE**: If damage is found, request an inspection by the carrier's agent within 48 hours of delivery and file a claim with the carrier. A claim for equipment damage in transit is the sole responsibility of the purchaser.

Carefully remove the pre-wired ORION endpoint and encoder assembly or ORION endpoint from the shipping carton and inspect for damage. Retain the contents of the installation kit for use in mounting the endpoint in the field.

License Requirements

This device complies with Part 15 of FCC Rules. Operation of this device is subject to the following conditions: (1) This device may not cause harmful interference, and (2) this device must accept any interference received, including interference that may cause undesired operation of the device.

In accordance with FCC Regulations, "Code of Federal Regulations" Title 47, Part 2, Subpart J, Section 1091, transmitters pass the requirements pertaining to RF radiation exposure. However, to avoid public exposure in excess of limits for general population (uncontrolled exposure), a 40 centimeter distance between the transmitter and the body of the user must be maintained during testing.

No FCC license is required by a utility to operate an ORION SE meter reading system.

This device complies with Industry Canada license-exempt RSS standard(s). Operation is subject to the following two conditions: (1) this device may not cause interference, and (2) this device must accept any interference, including interference that may cause undesired operation of the device. Le présent appareil est conforme aux CNR d'Industrie Canada applicables aux appareils radio exempts de licence. L'exploitation est autorisée aux deux conditions suivantes : (1) l'appareil ne doit pas produire de brouillage, et (2) l'utilisateur de l'appareil doit accepter tout brouillage radioélectrique subi, même si le brouillage est susceptible d'en compromettre le fonctionnement.

IMPORTANT

Transportation: The Federal Aviation Administration prohibits operating endpoints and receivers on all commercial aircraft. The ORION endpoint is considered an operating transmitter and cannot be shipped by air.

Identification

Each ORION endpoint can be identified using the unique numeric serial number located on a tag attached to the wire harness and etched on the top (CE) or side (SE, ME) of the endpoint housing. Each Badger Meter encoder is clearly identified on the face of the register with an assembly number, unit of measure and meter model.

SE/ME Endpoint (Medium Gray)

CE RTR® Endpoint (Black)

CE ADE® Endpoint (Light Gray)

Recordall® Transmitter Register (RTR®)

Absolute Digital Encoder (ADE®)

Figure 1: Endpoints and Encoders

Network Endpoint Installation

When installing an SE or ME (used with a network gateway transceiver) or CE (used with an ORION 4.0 or 2.0 gateway receiver) endpoint in a pit, the endpoint must be mounted through the lid of a non-metal pit lid for maximum propagation of the radio signal. If the endpoint is being installed indoors, a wired radio endpoint should be mounted on the outside of the building or in the floor joist near the outside wall of the building, and away from large metal objects for maximum propagation of the radio signal.

Splicing Considerations

For non-submerged indoor and outdoor applications where splicing is necessary, splice connections together and wrap any cables inside the base of the housing.

Splice connections made in pit environments require a pit field splice kit (62084-001), which can be ordered separately. Please refer to **RTR-I-15** for field splice kit installation instructions.

ORION endpoints shipped factory pre-wired to a Badger Meter encoder require no splicing. Only the mounting of the encoder to the meter and tightening the TORX® seal screw is necessary.

For all installations, excess wire should be coiled and cable tied to avoid any damage.

ORION Installation Kit Part Numbers*

TYPE	DESCRIPTION	ORION SE	ORION ME	ORION CE
PIT	Through the Lid Installation Kit	64394-024	64394-024	64394-001
	Below Lid with Knuckles Installation Kit		64394-025	64394-003
	Integrated Pit Lid Hanger Installation Kit		64394-026	64394-009
VAULT	Vault Installation Kit/Non-Standard Permalog+® Installation Kit		64394-027	64394-008
REMOTE	Remote Wall Mount Box Enclosure Kit	64394-028	64394-028	64394-021
	Remote Installation Bracket Kit	64394-029	64394-029	64394-019

* Refer to **ORI-P-09** for individual endpoint installation kit components.

Pit Installation

Through the Lid Installation Kit (SE, ME and CE Endpoints)

The **Through the Lid Installation Kit** is designed for use with a lid with maximum thickness of one-inch, and a standard hole diameter of 1-7/8 inches.

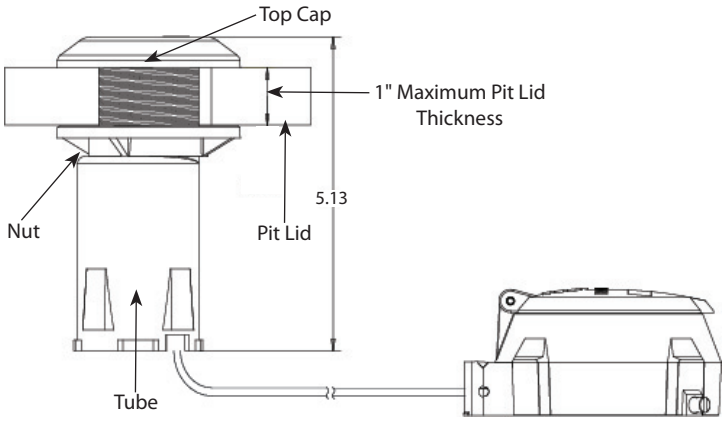

Figure 2: ORION Pit Endpoint

To install the endpoint through the lid, follow these steps per Figure 2.

1. Screw the nut onto the tube threads as shown.
2. Insert the tube through the bottom of the lid.
3. Screw the top cap onto the tube threads as shown and tighten.
4. Tighten the nut against the bottom of the lid until secure.

If installing an ORION endpoint through a thick lid, you may use a Pit Tube Extender (67025-001) which requires a two-inch diameter hole. With line of sight, RF performance will be reduced when using this extension.

Below Lid with Knuckles Installation Kit (ME and CE Endpoints)

For below the lid installations, a special mounting bracket (Figure 3) is available. This mounting support bracket is designed for use with 3/8", 1/2" and 5/8" rebar or 1/2" schedule 40 PVC pipe.

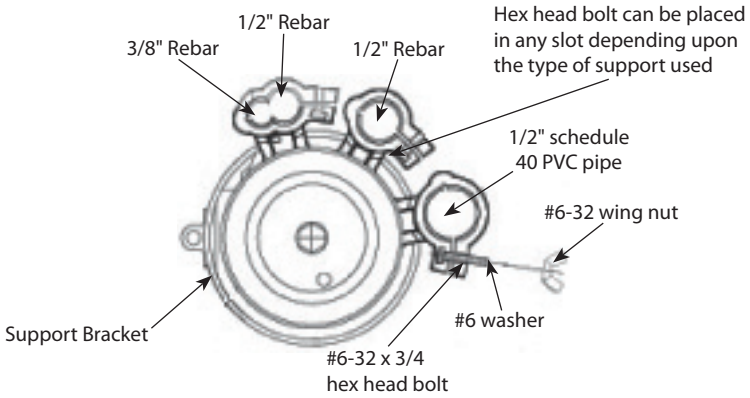

Figure 3: Pit Support Bracket (Knuckles) - Top View

To install an ORION endpoint below a meter pit lid, follow these steps.

1. Drive rebar or stake into the ground.

   ⚠CAUTION

   Drive rebar or stake into the ground **prior to attaching the endpoint** to avoid damage.

2. Once in the ground, secure the mounting bracket on the appropriate rebar or pipe using the enclosed washer, wing nut and hex head bolt provided with the bracket.
3. Insert the endpoint through the bottom of the bracket and thread the lock nut onto the top of the endpoint. For best results, mount the endpoint a maximum of one to two inches below the underside of the lid.

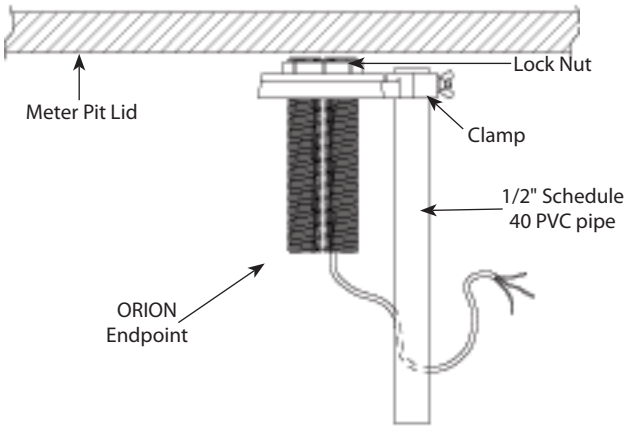

Figure 4: Pit ORION Beneath Lid Installation

Integrated Pit Lid Hanger Installation Kit (ME and CE Endpoints)

ORION endpoints can also be installed in composite and plastic lids with an integrated hanger for AMR/AMI endpoints. An installation kit for installing an ORION pit endpoint to the lid is available.

To install an ORION endpoint to a composite or plastic lid, follow these steps.

1. Thread the lock nut onto the top of the ORION endpoint as shown.
2. Slide the endpoint into the lid bracket.
3. Tighten the lock nut so that the endpoint is held firmly in place.

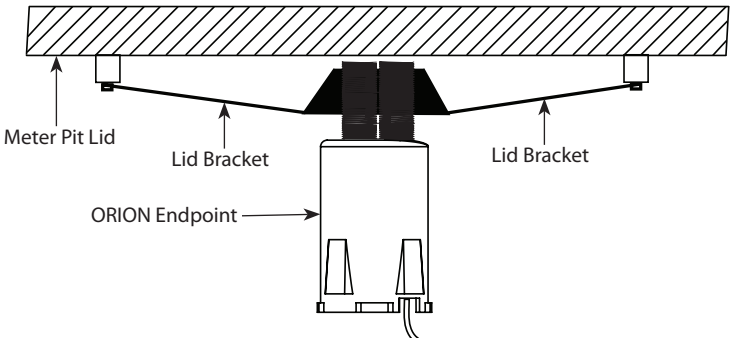

Figure 5: Integrated Pit Lid Hanger Installation

Vault Installation Kit (ME and CE Endpoints)

When installation of the ORION endpoint occurs in a deep vault, Badger Meter offers a kit that can be used to mount the endpoint to the side of the vault.

To install an ORION endpoint in a deep vault, follow these steps.

1. Mount the C-clamp on the side of the vault. Select a location close to the top of the vault that will not be damaged when access to the meter is required.
2. Place the neoprene spacer supplied in the installation kit around the endpoint, approximately 1/2 inch from the top of the endpoint.
3. Thread the locking ring on the endpoint until it makes contact with the neoprene spacer as shown in Figure 6.
4. Insert the endpoint into the C-clamp as shown.
5. Close the C-clamp and lock it in place so that it closes over the neoprene spacer and securely holds the endpoint.

NOTE: ORION radio endpoints perform best with a clear line of sight. Performance varies by installation and lid construction.

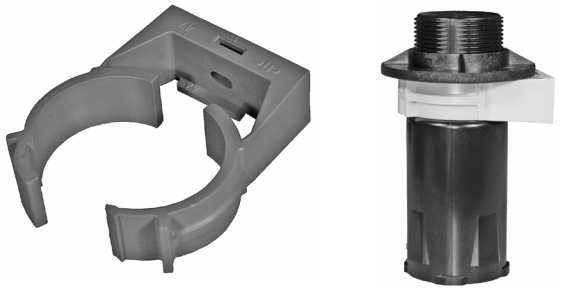

C-Clamp C-Clamp Around Endpoint

Figure 6: C-Clamp and Placement

Remote Installation

Remote Wall Mount Box Enclosure Kit (SE, ME and CE Endpoints)

The ORION Remote Wall Mount Box Enclosure Kit is for use with either the Recordall Transmitter Register (RTR) or Absolute Digital Encoder (ADE) stepped tube and threaded tube ORION endpoint for remote mounting applications. The wall mounted Remote Box Enclosure is designed for mounting ORION endpoints in indoor or outdoor environments and also provides an environmentally protected area for gel splice connections (if needed) to be maintained inside the enclosure.

The ORION Remote Wall Mount Box Enclosure Kit is recommended for proper mounting of the ORION endpoint for remote applications.

Remote Box Enclosure

ORION CE RTR Endpoint

Figure 7: Enclosure and Endpoint

To install an ORION endpoint using the Remote Box Enclosure, follow these steps.

1. Flip the Remote Box Enclosure over and look inside to verify the proper orientation. Locate the three security ribs inside the Remote Box Enclosure to determine the top of the enclosure.

   The bottom of the Remote Box Enclosure is identified by the two strain relief tabs located on both sides of the enclosure housing and the hole in the bottom of the enclosure that allows access to the endpoint IR communication port without having to disassemble the unit (Figure 8).

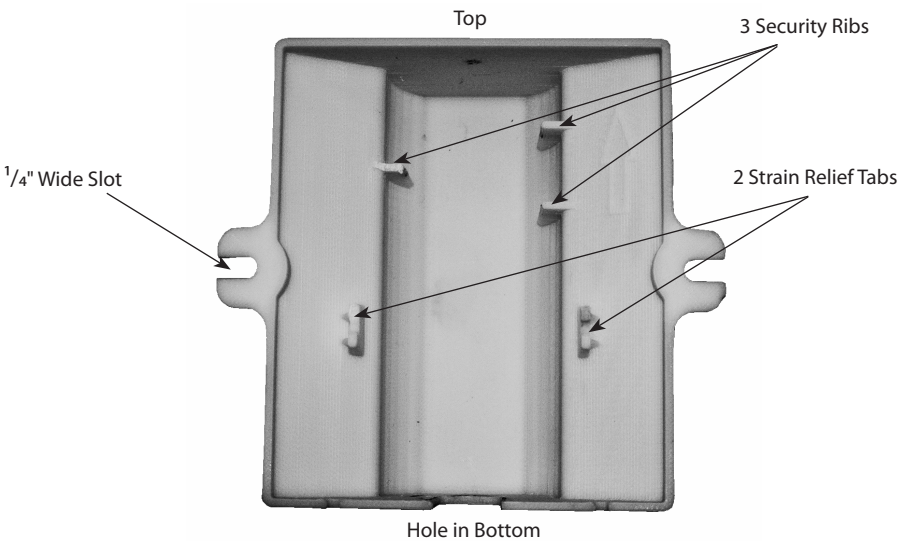

Figure 8: Remote Box Enclosure Mounting

2. Place the endpoint into the ORION Remote Box Enclosure as shown in Figure 9. To ensure maximum endpoint performance, it is important to mount the ORION endpoint in the proper orientation, with the endpoint antenna up and ORION endpoint IR communication port and wire down.
3. Make certain the flat side of the endpoint is facing the back of the enclosure, or toward the installer, when inserting the ORION endpoint into the Remote Box Enclosure (Figure 9). When installing, mount the endpoint antenna toward the top of the enclosure, between the security ribs.

   NOTE: The arrow on the back of the Remote Box Enclosure points up, toward the top of the assembly.

   When installing the Remote Box Enclosure to a wall, mount it with the arrow pointed up (toward the sky).

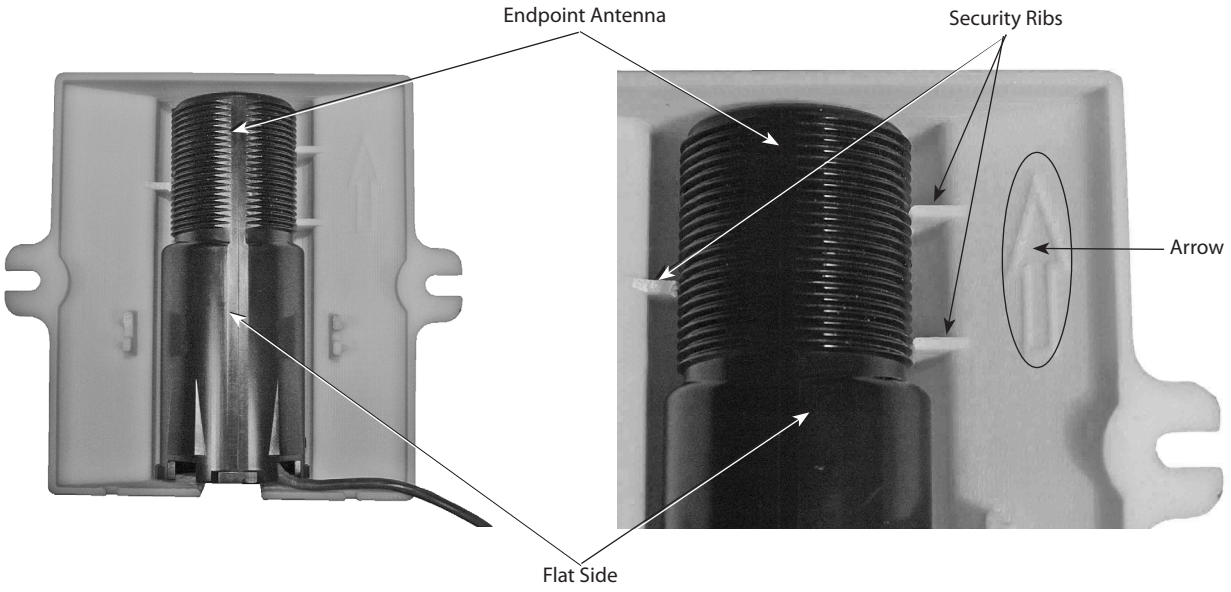

Figure 9: Endpoint Orientation

4. After the endpoint is mounted in the Remote Box Enclosure, loop the endpoint wire through the strain relief tab and through the cut out on the bottom of the enclosure. If needed, gel splice connections can be made and kept inside the Enclosure prior to mounting.

Figure 10: Endpoint Wire Positioning

5. Verify that the Remote Box Enclosure is properly positioned with the endpoint antenna up and the endpoint IR port facing down. Secure the enclosure to the wall using appropriate customer-supplied screws.

Figure 11: Enclosure Positioning

Remote Installation Bracket Kit (SE, ME and CE Endpoints)

The following instructions are provided to properly install an ORION endpoint in any indoor, outdoor or pit application. Prior to beginning the installation procedure, ensure that the following items are available.

- Remote Installation Bracket Kit
- Two customer-supplied screws
- Screwdriver and drill

The Remote Installation Bracket securely mounts an ORION endpoint. For non-submerged indoor and outdoor applications, the installation bracket can also be used to enclose gel-cap, wire-splice connections to protect them from the environment and to prevent tampering in any indoor or outdoor non-metallic joist, wall or pit application.

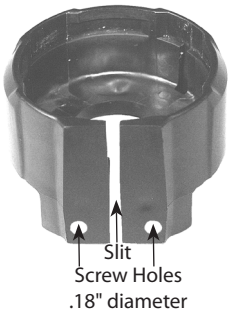

To install the bracket to the housing, follow these steps.

1. Place the encoder cable harness through the slit in the bracket with the screw holes at the bottom.

NOTE: Carefully slide the cable harness through the slit in the bracket.

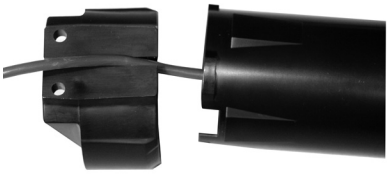

Figure 12: Cable Harness Threading

2. Locate the small triangle aligned with the small hole on the bottom of the installation bracket. This triangle is used to properly align the endpoint to the installation bracket.

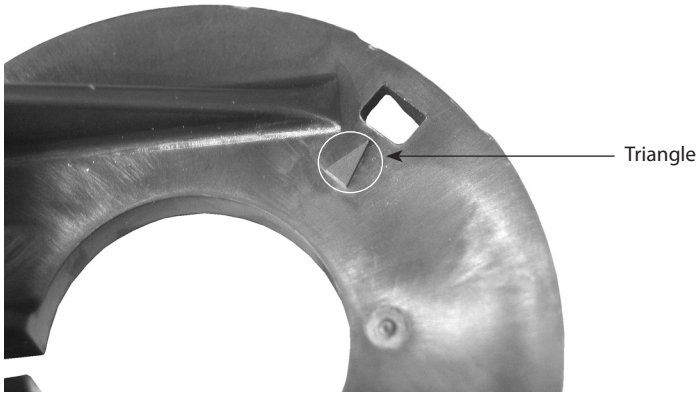

Figure 13: Aligning Triangle

On the ORION endpoint, there is a small triangle printed on the lower side of the housing.

Figure 14: Housing Triangle

3. Align the two triangles and push the bracket and endpoint together.

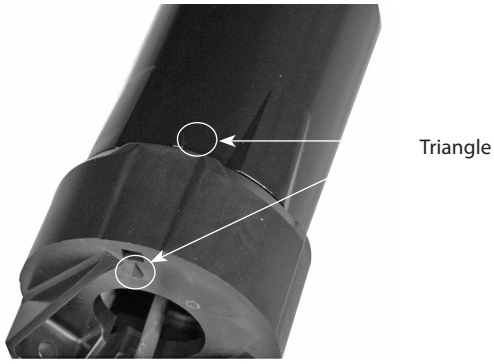

Figure 15: Align Both Triangles

4. With the installation bracket in one hand and the housing in your other hand, hold the bracket still and twist the housing approximately 1/4 turn clockwise until it clicks and locks into place.

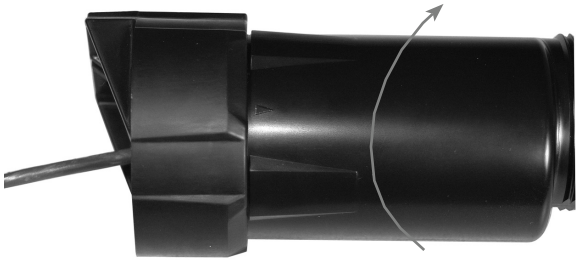

Figure 16: Bracket and Housing Connection

To install the endpoint assembly, follow these steps.

1. Align the ORION endpoint and the installation bracket with the antenna facing upwards (Figure 17).
2. Using two customer-supplied screws, secure the endpoint and installation bracket assembly to a non-metallic joist or wall.

Figure 17: Endpoint Positioning

Wiring a Universal Endpoint

Universal Endpoint Identification

The ORION Universal endpoint is available in a three-wire pit or remote endpoint configuration for connection to Sensus® ICE™ and ECR II, Neptune® ProRead and E-Coder™, Elster AMCo® ScanCoder®, Hersey® and Metron Translator encoder registers.

All ORION Universal endpoints are shipped from the factory pre-programmed and can be connected to any compatible encoder. Electronic readings broadcast from the ORION Universal endpoint contain the active number wheels programmed into the encoder, with a maximum of six digits.

The ORION system offers connectivity to any of the mechanical/absolute encoder registers listed above, ten years old or newer, as long as the encoder is programmed into the three-wire output mode for AMR and has three wires connected to it. Encoder registers that are currently in two-wire mode of operation require programming by the Utility, including registers that support auto two or three-wire detection systems that do not automatically switch to three-wire mode of operation once a compatible endpoint is connected for ORION connectivity.

To identify an ORION pit or remote Universal 1 endpoint, "Univ" has been added to the end of the ORION serial number. In addition, all Universal endpoints are shipped factory programmed in a sleep mode with a standard cable (10 feet for remotes and three feet for pit applications) for connection to a compatible Sensus, Neptune, Hersey or Elster AMCo encoder. ORION Universal endpoints begin broadcasting their readings as soon as they are awakened, either by running consumption through the encoder it is connected to or by using the infrared communication program on the ORION reading equipment. If the endpoint is awakened by running consumption, note that it may take several hours for the ORION Universal endpoint to begin broadcasting. This is due to the ORION Universal endpoint update schedule, which has the endpoint updating its reading from the encoder once an hour.

Required Splice Tools

Wire Cutter Not shown; customer-supplied

Gel Splice Crimping Tool 59983-001

Coax Wire Stripper 59989-001

Wiring the ORION Universal Endpoint to an Encoder

The ORION Universal endpoint is a three-wire metering endpoint device that requires connection to an encoder to complete the assembly. All three wires must be connected to complete an installation.

The ORION Universal endpoint connection can be made to either existing wires from the encoder or directly to the terminal screws of the encoder, depending on the application and manufacturer. If making a connection to existing wires use the installation kit provided and follow these steps.

1. To connect an encoder with existing wires to a ORION Universal endpoint, strip approximately 1-1/2 inches of outer insulation sheath from the encoder and endpoint cables using the stripping tool. We recommend using part number 59989-001 Coax Stripper.

   ⚠CAUTION

   Use caution when removing the outer sheath so that the inner signal wire insulation is not nicked or damaged.

2. Unwind the outer foil shield from the endpoint cable and cut it off evenly with the outer sheath using a cutting device.

3. Using the charts below, connect the ORION Universal 1 endpoint to an approved encoder according to the following guidelines. Verify the endpoint serial number prior to completing the wiring set up.

   Due to the customized, factory wire configurations of the Hersey Translator, please contact Hersey to determine the terminal post wiring schematic for your encoders. When the terminal post information is determined, use the Sensus ECR 11, OCE wiring directions below.

NOTE: The terminal posts and wire colors may not match.

ORION CE Endpoints (Serial Number > 80,000,000) or ORION SE and ME Endpoints

Universal 1 Endpoint Wire	Sensus ECR II, ICE	Neptune ProRead	Elster AMCo ScanCoder	AMCO Invision	ARB-V*	Metron Hawkeye
Red	R	B	G	G	B	R
Black	B	G	B	B	G	B
Green	G	R	R	R	R	G

ORION CE Endpoints (Serial Number < 79,999,999)

Universal 1 Endpoint Wire	Sensus ECR II, ICE	Neptune ProRead	Elster AMCo ScanCoder	ARB-V*	Metron Hawkeye
Red	R	B	G	R	R
Black	B	G	B	B	B
Green	G	R	R	G	G

R = Red B = Black G = Green

*A separate ORION CE endpoint is available for connectivity to the Neptune ARB-V encoder.

4. Connect the encoder cable wires to the ORION Universal endpoint wires using the insulation gel connectors provided in the installation kit. Refer to the chart to determine which wires need to be connected to complete an installation.

⚠CAUTION

Do not strip any insulation from the ends of the wires before you push them into the connector.

5. Push the wires that are to be connected together as far as possible into the connector.

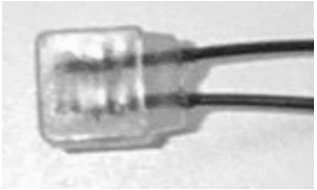

Figure 18: Wires In Connector

6. Using the required Gel Splice Crimping Tool (59983-001), place the connector with the wires into the jaws of the crimping tool.

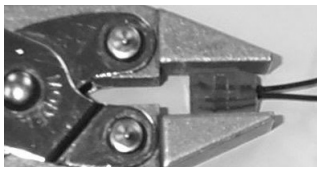

Figure 19: Connector in Crimping Tool

Crimp the connector by squeezing the handles until the connector is completely compressed. The crimp tool is designed to prevent applying too much pressure to the gel cap. Continue to apply pressure for three seconds.

Figure 20: Compress Connector

7. Attach the two plastic cable ties and tighten securely for strain relief. Snip off the excess cable tie with the wire cutter. For remote installations, the connection is complete.

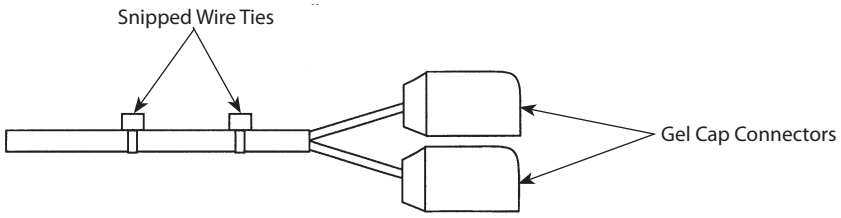

Figure 21: Wire Tie Attachment Locations

NOTE: For pit installations, it is advisable to test the connections **before** completing step 8.

8. For pit installations, place all three connected wires with gel caps into the field splice tube provided in the installation kit. Make sure the wires with gel caps are inserted as far as possible into the field splice tube. Close the field splice tube. The connection is now complete.

Testing the Wire Connections

The connection of the encoder and ORION Universal endpoint can be tested using an ORION data collector. It is recommended that all wiring connections be tested while on site. To test, set the data collector into the Quick Read function.

Encoder Register Installation

Install an RTR or ADE on the water meter and secure it using either the TORX screw or standard seal screw provided.

RTR Endpoint

Once the Pit ORION endpoint is securely installed and the RTR is mounted on the water meter, the ORION system is ready for operation. Run water through the meter to increment the RTR 1/10th of the test circle. Upon receiving the first digital signal from the RTR, the endpoint counts the signal and begins its radio frequency transmissions. No specific testing of the wiring or programming of the endpoint is required. Reading each pit endpoint immediately after installation verifies proper operation and reading performance. ORION reading equipment only can be used to read installed ORION endpoints.

ADE Endpoint

After the ADE is assembled to the meter and the ORION endpoint is installed, the endpoint is ready for operation. Using a handheld or a mobile laptop confirms that the endpoint wiring has been done correctly and that the endpoint is broadcasting RF data for reading. When allowing the endpoint to turn on via consumption, the endpoint requires two hourly reading intervals where consumption has changed the electronic reading. For example, on a six-dial ADE, the ADE must detect consumption of 10 gallons over two, separate hourly reading periods before the endpoint will begin broadcasting read data. In either case, no specific testing or programming of the endpoint is required. Reading each pit endpoint after it has been installed verifies proper installation and reading performance.

ADE, ORION and RTR are registered trademarks of Badger Meter, Inc.

Other trademarks appearing in this document are the property of their respective entities.

© 2011 Badger Meter, Inc. All rights reserved.

Due to continuous research, product improvements and enhancements, Badger Meter reserves the right to change product or system specifications without notice, except to the extent an outstanding contractual obligation exists.

Badger Meter | P.O. Box 245036, Milwaukee, Wisconsin 53224-9536
800-876-3837 | infocentral@badgermeter.com | www.badgermeter.com