This device complies with Part 15 of FCC Rules. Operation is subject to the following conditions: (1) This device may not cause harmful interference, and (2) this device must accept any interference received, including interference that may cause undesired operation.

Le présent appareil est conforme aux CNR d'Industrie Canada applicables aux appareils radio exempts de licence. L'exploitation est autorisée aux deux conditions suivantes : (1) l'appareil ne doit pas produire de brouillage, et (2) l'utilisateur de l'appareil doit accepter tout brouillage radioélectrique subi, même si le brouillage est susceptible d'en compromettre le fonctionnement.

Caution: Any changes or modifications to the equipment not expressly approved by the party responsible for compliance could void user's authority to operate the equipment.

This equipment has been tested and found to comply within the limits for a Class B digital device, pursuant to part 15 of the FCC Rules. These limits are designed to provide reasonable protection against harmful interference in a residential installation. This equipment generates, uses, and can radiate radio frequency energy and, if not installed and used in accordance with the instructions, may cause harmful interference to radio communications. However, there is no guarantee that interference will not occur in a particular installation. If this equipment does cause harmful interference to radio or television reception, which can be determined by turning the equipment off and on, the user is encouraged to try to correct the interference by one or more the following measures:

- Reorient or relocate the receiving antenna
- Increase the separation between the equipment and receiver
- Connect the equipment into an outlet on a different circuit from that to which the receiver is connected
- Consult the dealer or an experienced radio/TV technician for help

A minimum separation distance of 20 cm must be maintained between the antenna and the person for this device to satisfy the RF exposure requirements.

This module is intended for OEM integrator. The OEM integrator is still responsible for the FCC compliance requirement of the end product, which integrates this module. Under such configuration, FCC Part 2.1091 radiation exposure limits set forth for population/uncontrolled environment can be satisfied.

Making Water Visible®
Trademarks appearing in this document are the property of their respective entities. Due to continuous research, product improvements and enhancements, Badger Meter reserves the right to change product or system specifications without notice, except to the extent an outstanding contractual obligation exists. © 2018 Badger Meter, Inc. All rights reserved.
www.badgermeter.com

Badger Meter | Trimble® Ranger 7 Handheld

Connecting ORION® Module(s) to the Trimble Ranger 7

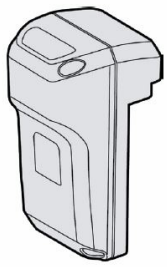

Module outer view

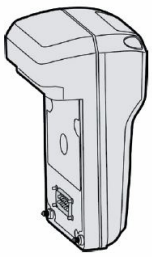

Module inner view

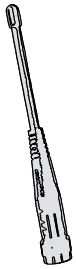

ORION antenna

NOTE: For complete information about the Trimble Ranger 7 handheld, see the user manual shipped with the handheld.

ORI-QS-02771-EN-01 (April 2018)

Quick Start Guide

This device complies with Part 15 of FCC Rules. Operation is subject to the following conditions: (1) This device may not cause harmful interference, and (2) this device must accept any interference received, including interference that may cause undesired operation.

Le présent appareil est conforme aux CNR d'Industrie Canada applicables aux appareils radio exempts de licence. L'exploitation est autorisée aux deux conditions suivantes : (1) l'appareil ne doit pas produire de brouillage, et (2) l'utilisateur de l'appareil doit accepter tout brouillage radioélectrique subi, même si le brouillage est susceptible d'en compromettre le fonctionnement.

Caution: Any changes or modifications to the equipment not expressly approved by the party responsible for compliance could void user's authority to operate the equipment.

This equipment has been tested and found to comply within the limits for a Class B digital device, pursuant to part 15 of the FCC Rules. These limits are designed to provide reasonable protection against harmful interference in a residential installation. This equipment generates, uses, and can radiate radio frequency energy and, if not installed and used in accordance with the instructions, may cause harmful interference to radio communications. However, there is no guarantee that interference will not occur in a particular installation. If this equipment does cause harmful interference to radio or television reception, which can be determined by turning the equipment off and on, the user is encouraged to try to correct the interference by one or more the following measures:

- Reorient or relocate the receiving antenna
- Increase the separation between the equipment and receiver
- Connect the equipment into an outlet on a different circuit from that to which the receiver is connected
- Consult the dealer or an experienced radio/TV technician for help

A minimum separation distance of 20 cm must be maintained between the antenna and the person for this device to satisfy the RF exposure requirements.

This module is intended for OEM integrator. The OEM integrator is still responsible for the FCC compliance requirement of the end product, which integrates this module. Under such configuration, FCC Part 2.1091 radiation exposure limits set forth for population/uncontrolled environment can be satisfied.

Making Water Visible®
Trademarks appearing in this document are the property of their respective entities. Due to continuous research, product improvements and enhancements, Badger Meter reserves the right to change product or system specifications without notice, except to the extent an outstanding contractual obligation exists. © 2018 Badger Meter, Inc. All rights reserved.
www.badgermeter.com

Badger Meter | Trimble® Ranger 7 Handheld

Connecting ORION® Module(s) to the Trimble Ranger 7

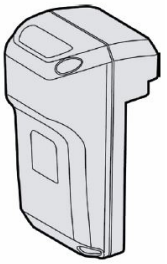

Module outer view

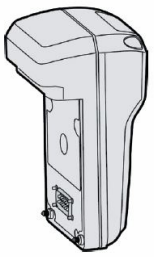

Module inner view

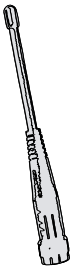

ORION antenna

NOTE: For complete information about the Trimble Ranger 7 handheld, see the user manual shipped with the handheld.

ORI-QS-02771-EN-01 (April 2018)

Quick Start Guide

DRAFT

IMPORTANT

Make sure the Ranger 7 is powered off before connecting or removing a module.

1. On the back of the Ranger 7, use a Phillips #1 screwdriver to loosen the two (2) screws on the module bay cover to remove it.

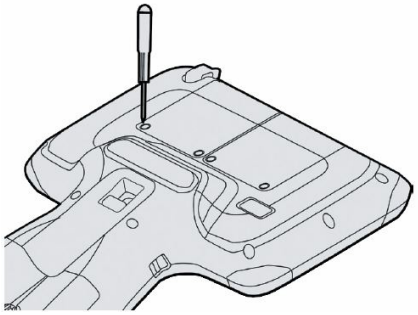

NOTE: Store the module bay cover somewhere safe for potential future use.

2. Hook the ORION module onto the Ranger 7, making sure that the slots on the top of the device line up with those on the module.

   NOTE: The module bay can accommodate one or both ORION modules (ME and CE), side-by-side.

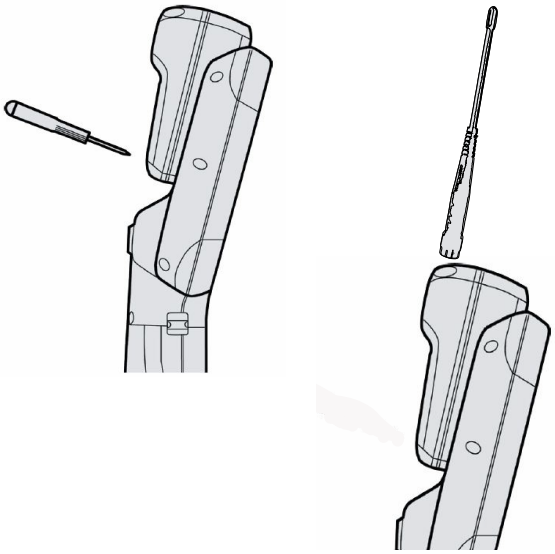

3. Tighten the two (2) captive screws at the bottom of the module using a Phillips #1screwdriver. Do not overtighten the screws.

4. Repeat steps 2 and 3 to install the second ORION module, if necessary.

5. Attach antenna to each module by threading it on the antenna connector at the top of the module until it is tight. Do not overtighten.

DRAFT

IMPORTANT

Make sure the Ranger 7 is powered off before connecting or removing a module.

1. On the back of the Ranger 7, use a Phillips #1 screwdriver to loosen the two (2) screws on the module bay cover to remove it.

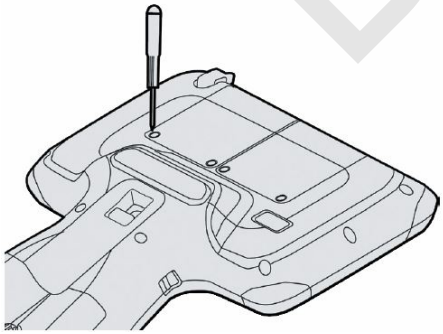

NOTE: Store the module bay cover somewhere safe for potential future use.

2. Hook the ORION module onto the Ranger 7, making sure that the slots on the top of the device line up with those on the module.

   NOTE: The module bay can accommodate one or both ORION modules (ME and CE), side-by-side.

2

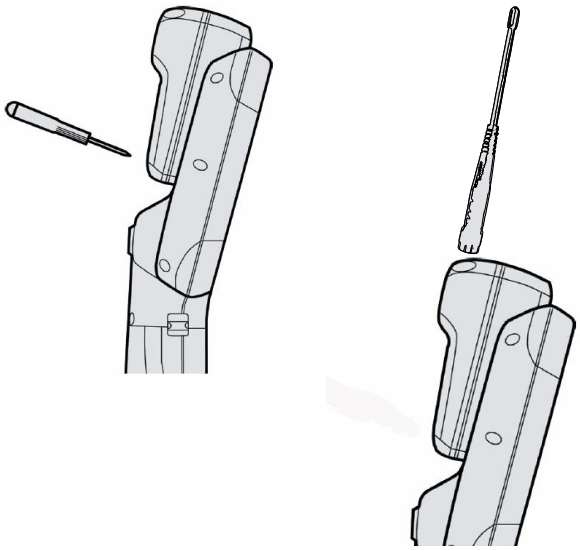

3. Tighten the two (2) captive screws at the bottom of the module using a Phillips #1 screwdriver. Do not overtighten the screws.

4. Repeat steps 2 and 3 to install the second ORION module, if necessary.

5. Attach antenna to each module by threading it on the antenna connector at the top of the module until it is tight. Do not overtighten.

3