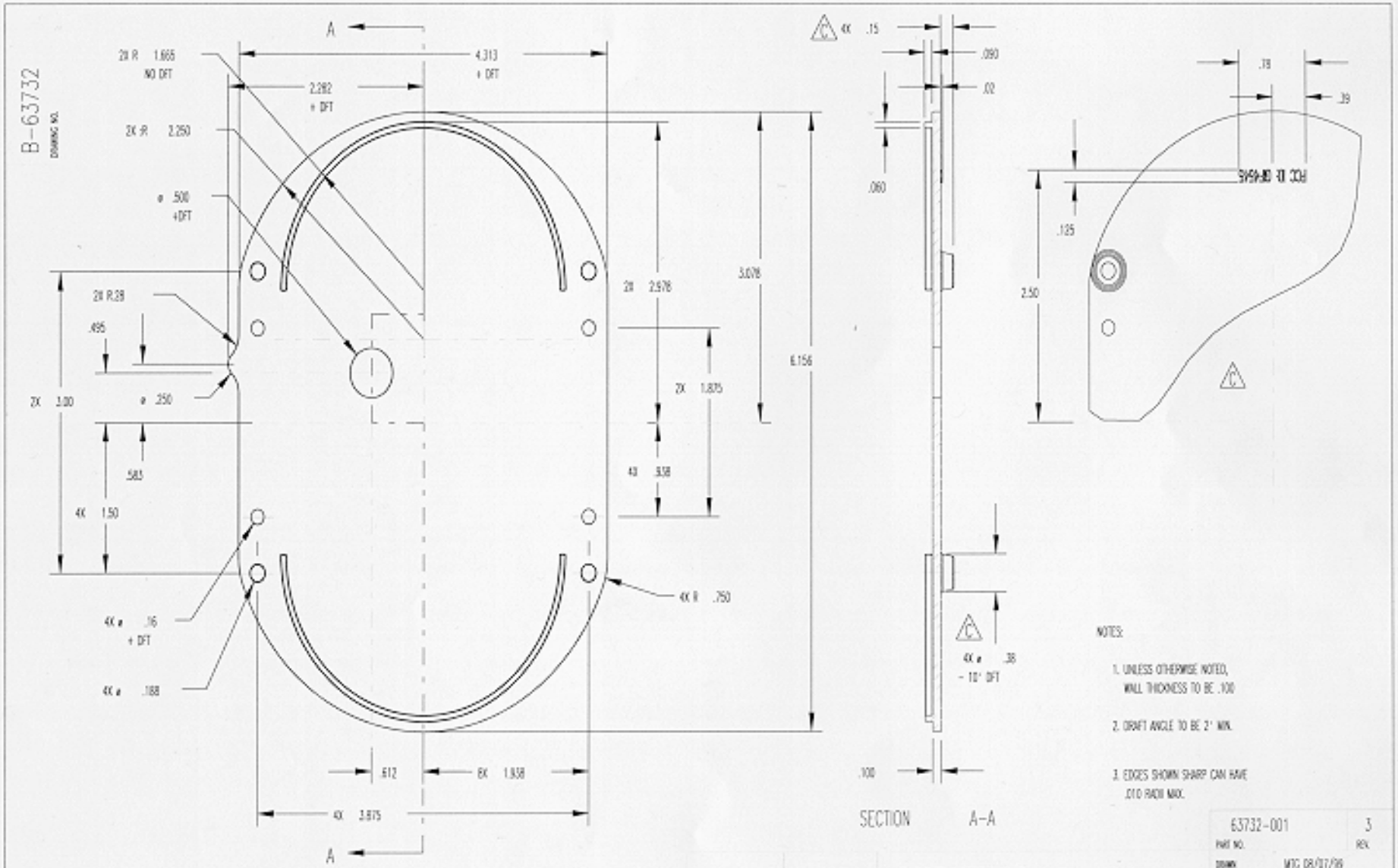

CONFIDENTIAL

ALL PROPRIETARY RIGHTS IN THE SUBJECT MATTER SHOWN ON THIS DRAWING ARE EXCLUSIVE PROPERTY OF BADGER METER, INC.

UNLESS OTHERWISE SPECIFIED

TOL. ON THREE PLACE DECIMAL DIMENSIONS ± .005

TOL. ON TWO PLACE DECIMAL DIMENSIONS ± .010

TOL. ON ANGULAR DIMENSIONS ± .05°, ON ANGULAR DIMENSIONS .33°

MICRO-FINISH

DEBURR: PER. MFG. STD.

ISSUE	CHANGE	BY	DATE
C		MTC	12/02/99
B		JK	11/16/99
A	6565	MTC	08/07/99

BADGER METER, INC

TYPE: PIT — MODEL: CELLNET — SIZE:

COVER PLATE

PART NAME:

MATERIAL: POLYCARBONATE PER PMS-1212

PART NO. 63732-001 — REV. 3

DRAWN: MTC 08/07/99

CHECKED: EB 10/04/99

APPROVED:

SCALE: 1:1

SHEET: 1 OF 1

DRAWING NO. B-63732 — ISSUE C

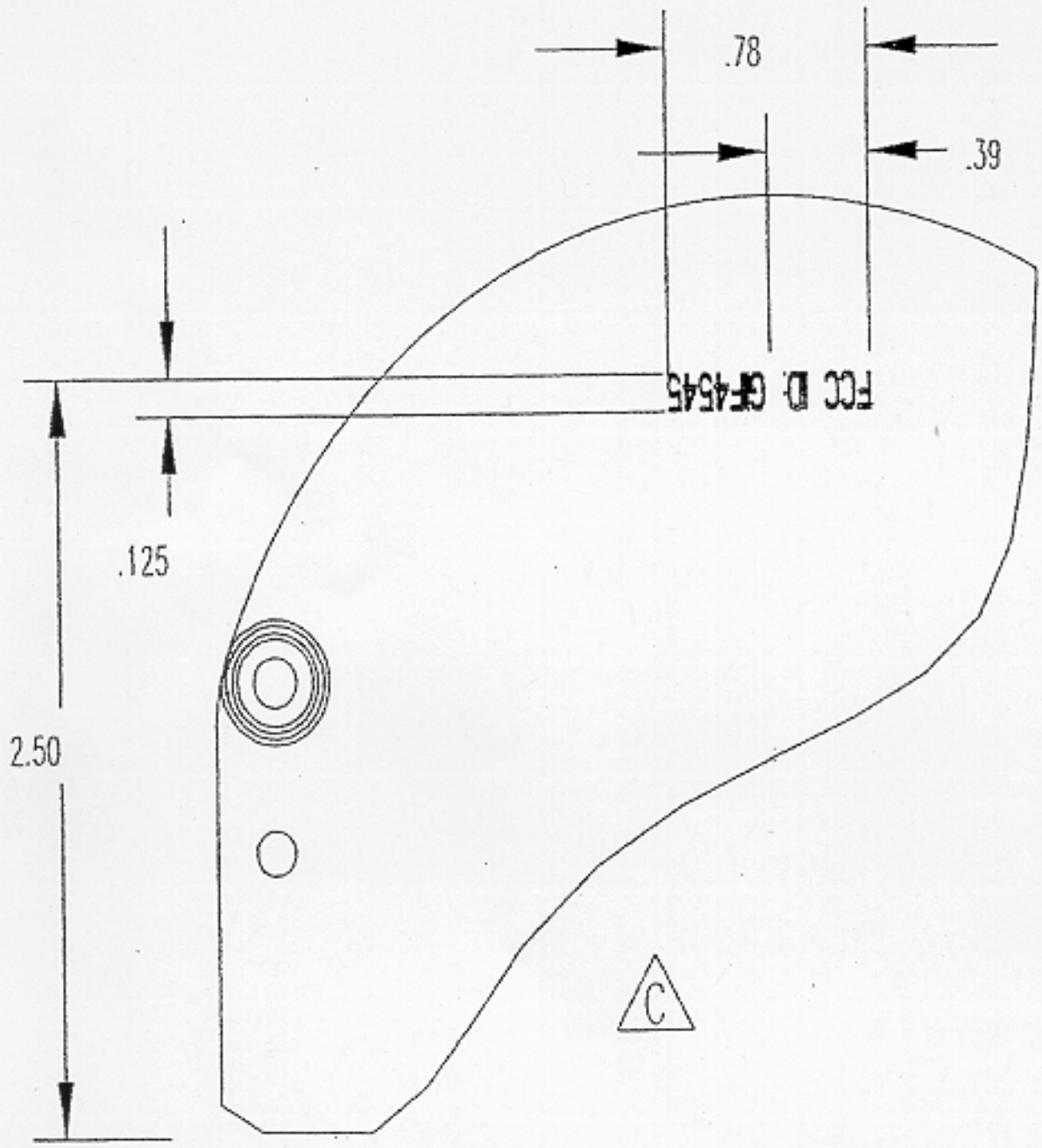
.78
.39
FCC ID: GF4545
.125
2.50
C