BadgerTouch®

Automated Meter Reading System Pit Module

Model ESERIESBT and HREBT

APPLICATION

The Badger Meter BadgerTouch® Pit Module with Twist Tight® connector for connectivity with an E-Series® Ultrasonic Meter or Badger Meter High Resolution Encoder (HR-E®) is a complete electronically encoded close-proximity automated meter reading system, specifically designed for pit meter installations. This system can be used with currently available E-Series Ultrasonic 3 and 4 inch meters, and HR-E encoders with all Recordall® Disc, Turbo, Compound, Combo, and Fire Series meters and assemblies. The Pit Module is designed to fit pit lid configurations up to 2 inches thick.

INSTALLATION

Unpacking

Carefully remove the BadgerTouch Pit Module from the shipping carton and inspect the assembly for any damage.

Location

To ensure proper operation of the BadgerTouch meter reading system, the BadgerTouch Pit Module should be mounted through a predrilled hole in the pit lid. Minimum hole diameter required is 1-3/4 inch. The Pit Module contains electronic circuitry that is totally encapsulated to enhance reliable performance in most locations, under most conditions.

Pit Module Installation

1. Remove the locking nut and the coil assembly from the Pit Module "mushroom" holder.

   To remove the coil assembly, squeeze the tabs at the bottom of the coil assembly, turn to unlock and pull the assembly out of the holder.

2. From the outside of the pit lid, insert the Pit Module holder through the lid.

3. Screw the locking nut (large diameter side up) onto the threaded tube of the holder until the locking nut fits snugly against the underside of the pit lid. See *Figure 1*.

4. Insert the coil assembly, which is connected to the lead wire, into the Pit Module holder, until it is fully seated in the holder. Turn the coil assembly until it locks into place.

5. Coil up any excess wire inside the pit and tie the cable to avoid any damage.

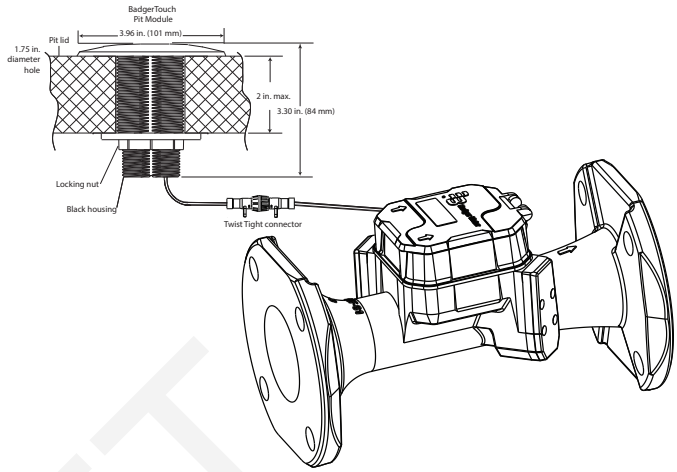

Figure 1: BadgerTouch Pit Module with Twist Tight connector and E-Series Ultrasonic meter

TESTING

Once the BadgerTouch Pit Module is secured through the pit lid and connected to the meter/encoder, the BadgerTouch system is ready for operation. No specific testing is required at the meter location regarding proper connections. Interrogation of each module will facilitate proper coordination of meters, modules and account. Use a VersaProbe® or other equivalent reading device for interrogation of the installed BadgerTouch modules.

LICENSE REQUIREMENTS

This device complies with Part 15 of the FCC Rules. Operation of this device is subject to the following conditions: (1) This device may not cause harmful interference, and (2) this device must accept any interference received, including interference that may cause undesired operation of the device. Any changes made by the user not approved by Badger Meter can void the user's authority to operate the equipment.

In accordance with FCC Regulations, "Code of Federal Regulations" Title 47, Part 2, Subpart J, Section 1091, transmitters pass the requirements pertaining to radiation exposure. However, to avoid public exposure in excess of limits for general population (uncontrolled exposure), a 20 centimeter distance between the transmitter and the body of the user must be maintained during operation.

No license is required by the utility to operate a BadgerTouch meter reading system.

(continued on back)

DRAFT

This device complies with Industry Canada license-exempt RSS standard(s). Operation is subject to the following two conditions: (1) this device may not cause interference, and (2) this device must accept any interference, including interference that may cause undesired operation of the device.

Le présent appareil est conforme aux CNR d'Industrie Canada applicables aux appareils radio exempts de licence. L'exploitation est autorisée aux deux conditions suivantes : (1) l'appareil ne doit pas produire de brouillage, et (2) l'utilisateur de l'appareil doit accepter tout brouillage radioélectrique subi, même si le brouillage est susceptible d'en compromettre le fonctionnement.

DRAFT

SMART WATER IS *BADGER METER*

BadgerTouch, E-Series, HR-E and Recordall are registered trademarks of Badger Meter, Inc. Other trademarks appearing in this document are the property of their respective entities. Due to continuous research, product improvements and enhancements, Badger Meter reserves the right to change product or system specifications without notice, except to the extent an outstanding contractual obligation exists. © 2020 Badger Meter, Inc. All rights reserved.

www.badgermeter.com

The Americas | Badger Meter | 4545 West Brown Deer Rd | PO Box 245036 | Milwaukee, WI 53224-9536 | 800-876-3837 | 414-355-0400
México | Badger Meter de las Americas, S.A. de C.V. | Pedro Luis Ogazón N°32 | Esq. Angelina N°24 | Colonia Guadalupe Inn | CP 01050 | México, DF | México | +52-55-5662-0882
Europe, Middle East and Africa | Badger Meter Europa GmbH | Nurtinger Str 76 | 72639 Neuffen | Germany | +49-7025-9208-0
Europe, Middle East Branch Office | Badger Meter Europe | PO Box 341442 | Dubai Silicon Oasis, Head Quarter Building, Wing C, Office #C209 | Dubai / UAE | +971-4-371 2503
Asia Pacific | Badger Meter | 80 Marine Parade Rd | 19-07 Parkway Parade | Singapore 449269 | +65-63464836
Switzerland | Badger Meter Swiss AG | Mittelholzerstrasse 8 | 3006 Bern | Switzerland | +41-31-932 01 11

Legacy Document Number: BT-I-04-EN P/N 64764-006