FCC/IC Test Report

APPLICANT	:	PSION INC.
EQUIPMENT	:	EP10 Hand-Held Computer
BRAND NAME	:	psion
MODEL NAME	:	7515U
FCC ID	:	GM37515UA
IC		2739D-7515UA
STANDARD	:	ICES-003 Issue 4
		IC RSS-132 Issue 2
		IC RSS-133 Issue 5
		IC RSS-139 Issue 2
		IC RSS-210 Issue 8
		IC RSS-310 Issue 3
		FCC 47 CFR FCC Part 15 Subpart B
CLASSIFICATION	:	Certification

The product was received on Apr. 09, 2011 and completely tested on Jun. 15, 2011. We, SPORTON INTERNATIONAL INC., would like to declare that the tested sample has been evaluated in accordance with the procedures given in ANSI C63.4-2003 and shown the compliance with the applicable technical standards.

The test results in this report apply exclusively to the tested model / sample. Without written approval of SPORTON INTERNATIONAL INC., the test report shall not be reproduced except in full.

Reviewed by:

Jones Tsai

Jones Tsai / Manager

Testing Laboratory 1190

SPORTON INTERNATIONAL INC.
No. 52, Hwa Ya 1st Rd., Hwa Ya Technology Park, Kwei-Shan Hsiang, Tao Yuan Hsien, Taiwan, R.O.C.

TABLE OF CONTENTS

REVISION HISTORY **3**

SUMMARY OF TEST RESULT **4**

1. GENERAL DESCRIPTION **5**

1.1. Applicant 5
1.2. Manufacturer 5
1.3. Feature of Equipment Under Test 6
1.4. Test Site 7
1.5. Applied Standards 8
1.6. Ancillary Equipment List 9

2. TEST CONFIGURATION OF EQUIPMENT UNDER TEST **10**

2.1. Test Mode 10
2.2. Connection Diagram of Test System 12
2.3. Test Software 13

3. TEST RESULT **14**

3.1. Test of AC Conducted Emission Measurement 14
3.2. Test of Radiated Emission Measurement 18

4. LIST OF MEASURING EQUIPMENT **27**

5. UNCERTAINTY OF EVALUATION **29**

APPENDIX A. PHOTOGRAPHS OF EUT

APPENDIX B. SETUP PHOTOGRAPHS

REVISION HISTORY

REPORT NO.	VERSION	DESCRIPTION	ISSUED DATE
FC140905	Rev. 01	Initial issue of report	Jul. 04, 2011

SUMMARY OF TEST RESULT

Report Section	FCC Rule	IC Rule	Description	Limit	Result	Remark
3.1	15.107	7.2.2	AC Conducted Emission	< 15.107 limits < RSS-Gen table 2 limits	PASS	Under limit 5.2 dB at 0.58 MHz
3.2	15.109	7.2.3.2	Radiated Emission	< 15.109 limits or < RSS-Gen table 1 limits (Section 6)	PASS	Under limit 3.07 dB at 37.92 MHz

1. General Description

1.1. Applicant

PSION INC.
2100 Meadowvale Blvd, Mississauga ON L5N 7J9, CANADA

1.2. Manufacturer

PSION INC.
2100 Meadowvale Blvd, Mississauga ON L5N 7J9, CANADA

1.3. Feature of Equipment Under Test

Product Feature & Specification	
Equipment	EP10 HAND-HELD COMPUTER
Brand Name	psion
Model Name	7515U
FCC ID	GM37515UA
IC	2739D-7515UA
Tx Frequency Range	GSM850 : 824 MHz ~ 849 MHz GSM1900 : 1850 MHz ~ 1910 MHz WCDMA Band V : 824 MHz ~ 849 MHz WCDMA Band II : 1850 MHz ~ 1910 MHz Bluetooth : 2400 MHz ~ 2483.5 MHz WLAN : 2400 MHz ~ 2483.5 MHz WLAN : 5150 MHz ~ 5250 MHz WLAN : 5250 MHz ~ 5350 MHz WLAN : 5470 MHz ~ 5725 MHz WLAN : 5725 MHZ ~ 5850 MHz
Rx Frequency Range	GSM850 : 869 MHz ~ 894 MHz GSM1900 : 1930 MHz ~ 1990 MHz WCDMA Band V : 869 MHz ~ 894 MHz WCDMA Band II : 1930 MHz ~ 1990 MHz Bluetooth : 2400 MHz ~ 2483.5 MHz WLAN : 2400 MHz ~ 2483.5 MHz WLAN : 5150 MHz ~ 5250 MHz WLAN : 5250 MHz ~ 5350 MHz WLAN : 5470 MHz ~ 5725 MHz WLAN : 5725 MHZ ~ 5850 MHz GPS : 1.57542 GHz
Antenna Type	Fixed Internal Antenna
HW Version	2
SW Version	1.1
Type of Modulation	GSM / GPRS : GMSK EDGE : 8PSK WCDMA : QPSK HSDPA : QPSK / 16QAM HSUPA : BPSK Bluetooth (1Mbps) : GFSK Bluetooth EDR (2Mbps) : π/4-DQPSK Bluetooth EDR (3Mbps) : 8-DPSK 802.11b : DSSS (BPSK / QPSK / CCK) 802.11a/g/n : OFDM (BPSK / QPSK / 16QAM / 64QAM) GPS : BPSK
EUT Stage	Identical Prototype

Remark: The above EUT's information was declared by manufacturer. Please refer to the specifications or user's manual for more detailed description.

List of Accessory:

Specification of Accessory		
AC Adapter 1	**Brand Name**	Leader
	Model Name	IU18-2050300-WP
AC Adapter 2	**Brand Name**	Phihong
	Model Name	PSA15R-050P
Battery	**Brand Name**	PSION / ETI
	Model Name	RV3010 / BP08-000760
Car Charger	**Brand Name**	AOEM
	Model Name	C15C-0520CD0-C0
Desktop Charger Cradle (Single Dock)	**Brand Name**	PSION
	Model Name	RV4000
Desktop Charger Cradle (AC Adapter)	**Brand Name**	FSP
	Model Name	FSP050-DBAB1
Charger Snap Module 1	**Brand Name**	PSION
	Model Name	RV4001
Charger Snap Module 2	**Brand Name**	PSION
	Model Name	RV4002
LCD Panel	**Brand Name**	Sharp
	Model Name	LS037V7DW01
Pouch	**Brand Name**	Psion
	Model Name	RV6091

Remark: For accessories equipped with this EUT, please refer to Appendix A.

1.4. Test Site

Test Site	SPORTON INTERNATIONAL INC.		
Test Site Location	No. 52, Hwa Ya 1st Rd., Hwa Ya Technology Park, Kwei-Shan Hsiang, Tao Yuan Hsien, Taiwan, R.O.C. TEL: +886-3-327-3456 FAX: +886-3-328-4978 No. 30-2, Dingfu Tsuen, Linkou Shiang, Taipei, Taiwan 244, R.O.C. TEL: +886-2-2603-5367 / +886-2-2601-1640 FAX: +886-2-2601-1695		
Test Site No.	**Sporton Site No.**		**FCC/IC Registration No.**
	CO05-HY	OS02-LK/03CH06-HY	722060/4086B-1

1.5. Applied Standards

According to the specifications of the manufacturer, the EUT must comply with the requirements of the following standards:

- FCC 47 CFR FCC Part 15 Subpart B
- IC ICES-003 Issue 4
- ANSI C63.4-2003
- IC RSS-Gen Issue 3
- IC RSS-132 Issue 2
- IC RSS-133 Issue 5
- IC RSS-139 Issue 2
- IC RSS-210 Issue 8
- IC RSS-310 Issue 3

Remark:

1. All test items were verified and recorded according to the standards and without any deviation during the test.

2. The test results for FCC compliance, indicating that these results are deemed satisfactory evidence of compliance with **Industry Canada Interference-Causing Equipment Standard ICES-003**.

1.6. Ancillary Equipment List

Item	Equipment	Trade Name	Model Name	FCC ID	Data Cable	Power Cord
1.	System Simulator	R&S	CMU 200	N/A	N/A	Unshielded, 1.8 m
2.	GPS Station	T&E	GS-50	N/A	N/A	Unshielded, 1.8 m
3.	WLAN AP	D-Link	DIR-628	KA2DIR628A2	N/A	Unshielded, 1.8 m
4.	Bluetooth Earphone	Nokia	BH-102	PYAHS-107W	N/A	N/A
5.	Notebook	DELL	Vostro 1510	FCC DoC	N/A	AC I/P: Unshielded, 1.2 m DC O/P: Shielded, 1.8 m
6.	Notebook	DELL	D610	E2K24GBRL	N/A	AC I/P: Unshielded, 1.2 m DC O/P: Shielded, 1.8 m
7.	LCD Monitor	Lenovo	6135-AB1	FCC DoC	Shielded, 1.6 m	Unshielded, 1.8 m
8.	iPod	Apple	A1199	FCC DoC	Unshielded, 1.2 m	N/A
9.	iPod	Apple	A1285	FCC DoC	Shielded, 1.0 m	N/A
10.	Car Battery	GS	GTH60LS(55B24LS)	N/A	N/A	N/A

2. Test Configuration of Equipment Under Test

2.1. Test Mode

The EUT has been associated with peripherals pursuant to ANSI C63.4-2003 and configuration operated in a manner tended to maximize its emission characteristics in a typical application.

Frequency range investigated: conduction (150 kHz to 30 MHz), radiation (30MHz to the 5th harmonic of the highest fundamental frequency or to 40 GHz, whichever is lower).

The following tables are showing the test modes as the worst cases and recorded in this report.

Item	EUT Configuration	Test Condition		
		EMI AC	EMI RE<1G	EMI RE≥1G
1.	Charging Mode (EUT with adapter)	☒	☒	☒
2.	Charging Mode (EUT with car charger)	Note 1	☒	Note 1

Abbreviations:

- EMI AC: AC conducted emissions
- EMI RE ≥ 1G: EUT radiated emissions ≥ 1GHz
- EMI RE < 1G: EUT radiated emissions < 1GHz

Note 1: Testing for this mode is not required or not the worst case.

Test Items	EUT Configure Mode	Function Type
AC Conducted Emissions	1	Mode 1: GSM850 Idle + WLAN Idle(2.4G) + BT Idle + GPS Rx + Sleeve (USB + DC Jack) + MP3/Camera + Battery 3600mA + AC wall Adapter 1 +USB Cable Link with NB Mode 2: GSM1900 Idle + WLAN Idle(2.4G) + BT Idle + GPS Rx + Sleeve (RS232 + DC Jack) + MP3/Camera + Battery 3600mA + AC wall Adapter 1 +RS232 Cable Link with NB Mode 3: WCDMA1700 Idle + WLAN Idle(5G) + BT Idle + GPS Rx + Sleeve (USB + DC Jack) + MP3/Camera + Battery 3600mA + AC wall Adapter 1 +USB Cable Link with NB Mode 4: WCDMA1700 Idle + WLAN Idle(5G) + BT Idle + GPS Rx + Sleeve (USB + DC Jack) + MP3/Camera + Battery 3600mA + AC wall Adapter 2 +USB Cable Link with NB Mode 5: WCDMA1700 Idle + WLAN Idle(5G) + BT Idle + GPS Rx + Battery 3600mA + USB Cable Link with NB + RV4000 Single Dock
Radiated Emissions < 1GHz	1/2	Mode 1: GSM850 Idle + WLAN Idle(2.4G) + BT Idle + MP3/Camera + Sleeve (USB + DC Jack) + USB Cable Link with NB + AC wall Adapter 1 + Battery 3600mA Mode 2: GSM1900 Idle + WLAN Link(5G) + BT Idle + MP3/Camera + Sleeve (RS232 + DC Jack) +RS232Cable Link with NB + CLA DC Jack 12V + Battery 3600mA Mode 3: WCDMA850 Idle + WLAN Idle(5G) + BT Idle + MP3/Camera + Sleeve (USB + DC Jack) + RS232Cable Link with NB + CLA DC Jack 24V + Battery 3600mA Mode 4: WCDMA1700 Idle + WLAN Idle(5G) + BT Idle + MP3/Camera + Sleeve (USB + DC Jack) + USB cable Link with NB + AC wall Adaptor 1 + Battery 3600mA Mode 5: WCDMA1700 Idle + WLAN Idle(5G) + BT Idle + MP3/Camera + Sleeve (USB + DC Jack) + USB Cable Link with NB + AC wall Adapter 2 + Battery 3600mA Mode 6: GSM850 Idle + WLAN Idle(2.4G) + BT Idle + MP3/Camerr + Sleeve (USB + DC Jack) + USB Cable Link with NB + RV4000 Single Dock + Battery 3600mA
Radiated Emissions ≥ 1GHz	1	Mode 1: WCDMA1700 Idle + WLAN Idle(5G) + BT Idle + MP3/Camera + Sleeve (USB + DC Jack) + USB Cable Link with NB + AC wall Adapter 2 + Battery 3600mA

Remark:

1. The worst case of AC is mode 3; only the test data of this mode was reported.
2. The worst case of RE < 1G is mode 5; only the test data of this mode was reported.

2.2. Connection Diagram of Test System

<EUT with Adapter Mode>

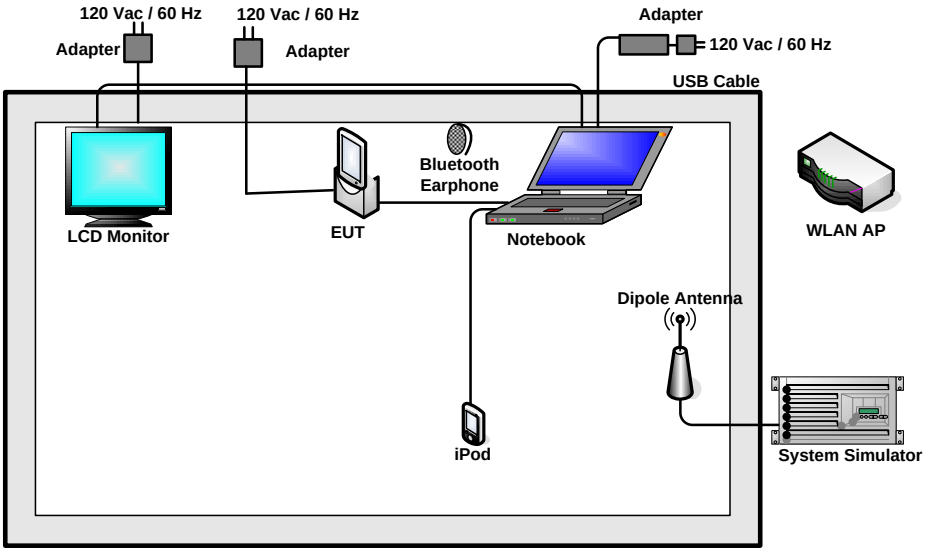

(Diagram for AC conducted emission from mode 1~5 and Radiated Emission mode 1, 4, 5, 6)

<EUT with USB Cable Mode (Link with Notebook) >

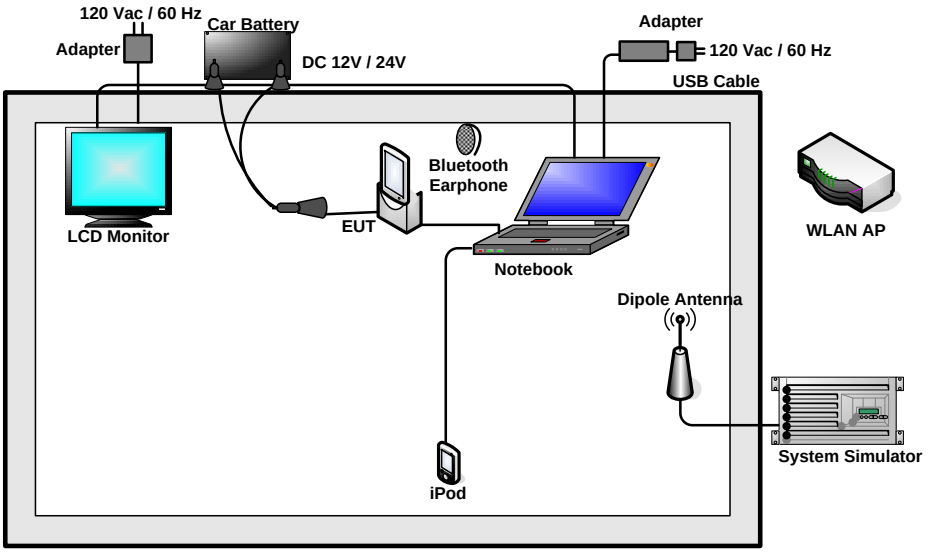

(Diagram for radiated emission mode 2, 3)

2.3. Test Software

The EUT was in GSM or WCDMA or EDGE or HSDPA idle mode during the testing. The EUT was synchronized to the BCCH, and is in continuous receiving mode by setting system simulator's paging reorganization.

At the same time, the EUT was attached to the Bluetooth earphone or WLAN AP, and the following programs installed in the EUT were programmed during the test.

1. Execute the programs, "EMI.Test.exe", installed in notebook for active sync files transfer with EUT via USB cable / iPod.
2. Execute "VisualGPSCe" to make the EUT receive signals from GPS station continuously.
3. Execute "Music Player" to play MP3 file.
4. Turn on camera to capture images.

3. Test Result

3.1. Test of AC Conducted Emission Measurement

3.1.1 Limits of AC Conducted Emission

For equipment that is designed to be connected to the public utility (AC) power line, the radio frequency voltage that is conducted back onto the AC power line on any frequency or frequencies within the band 150 kHz to 30 MHz shall not exceed the limits in the following table.

Frequency of emission (MHz)	Conducted limit (dBuV)	
	Quasi-peak	Average
0.15-0.5	66 to 56*	56 to 46*
0.5-5	56	46
5-30	60	50

*Decreases with the logarithm of the frequency.

3.1.2 Measuring Instruments

See list of measuring instruments of this test report.

3.1.3 Test Procedure

1. The EUT was placed 0.4 meter from the conducting wall of the shielding room was kept at least 80 centimeters from any other grounded conducting surface.
2. Connect EUT to the power mains through a line impedance stabilization network (LISN).
3. All the support units are connecting to the other LISN.
4. The LISN provides 50 ohm coupling impedance for the measuring instrument.
5. The FCC states that a 50 ohm, 50 microhenry LISN should be used.
6. Both sides of AC line were checked for maximum conducted interference.
7. The frequency range from 150 kHz to 30 MHz was searched.
8. Set the test-receiver system to Peak Detect Function and specified bandwidth with Maximum Hold Mode.

3.1.4 Test Setup

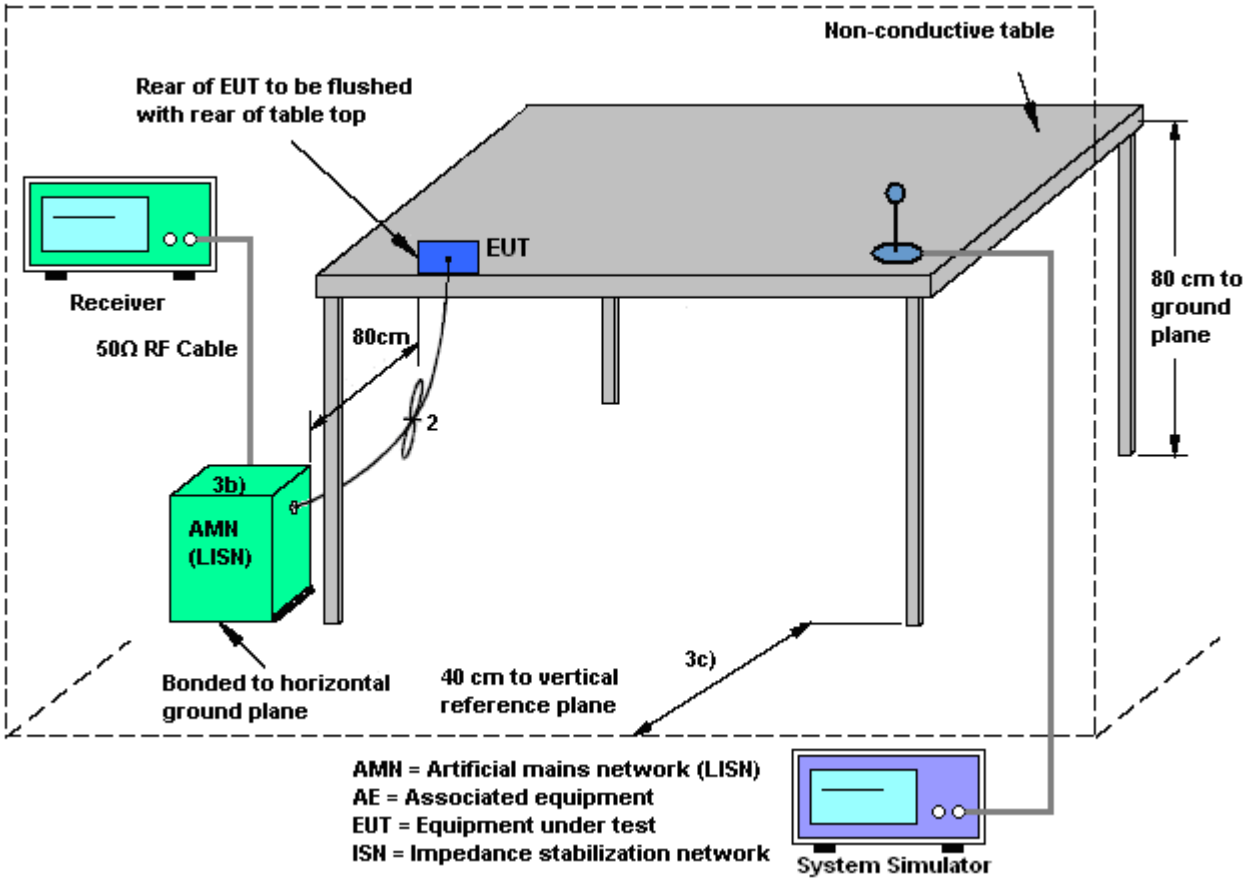

3.1.5 Test Result of AC Conducted Emission

Test Mode :	Mode 3	**Temperature :**	20~22℃
Test Engineer :	Novic Chiang	**Relative Humidity :**	40~42%
Test Voltage :	120Vac / 60Hz	**Phase :**	Line
Function Type :	WCDMA1700 Idle + WLAN Idle(5G) + BT Idle + GPS Rx + Sleeve (USB + DC Jack) + MP3/Camera + Battery 3600mA + AC wall Adapter 1 +USB Cable Link with NB		
Remark :	All emissions not reported here are more than 10 dB below the prescribed limit.		

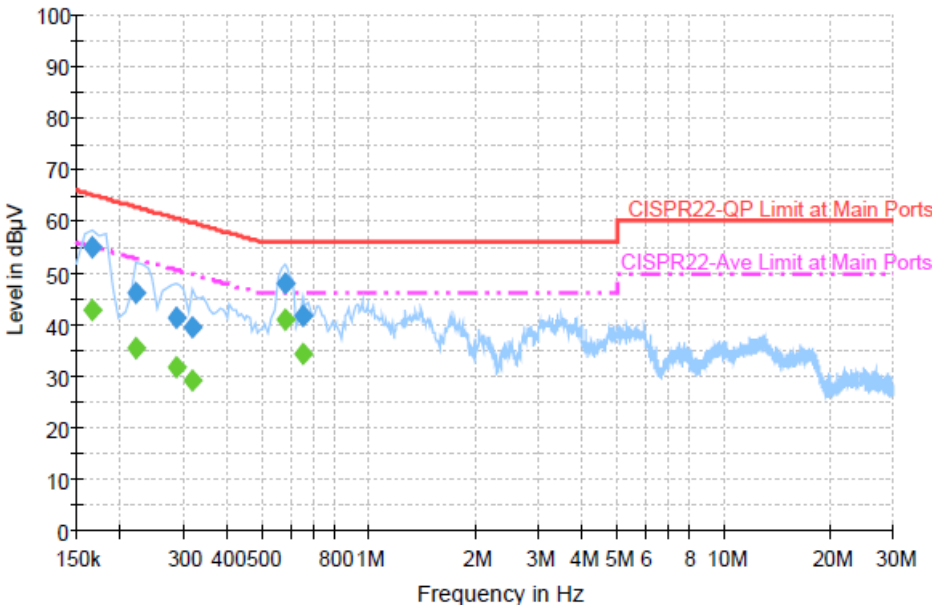

Final Result 1

Frequency (MHz)	QuasiPeak (dBµV)	Filter	Line	Corr. (dB)	Margin (dB)	Limit (dBµV)
0.166000	54.9	Off	L1	19.4	10.3	65.2
0.222000	46.1	Off	L1	19.4	16.6	62.7
0.286000	41.4	Off	L1	19.4	19.2	60.6
0.318000	39.4	Off	L1	19.4	18.4	59.8
0.582000	47.9	Off	L1	19.4	8.1	56.0
0.654000	41.6	Off	L1	19.4	14.4	56.0

Final Result 2

Frequency (MHz)	Average (dBµV)	Filter	Line	Corr. (dB)	Margin (dB)	Limit (dBµV)
0.166000	42.7	Off	L1	19.4	12.5	55.2
0.222000	35.3	Off	L1	19.4	17.4	52.7
0.286000	31.8	Off	L1	19.4	18.8	50.6
0.318000	29.0	Off	L1	19.4	20.8	49.8
0.582000	40.8	Off	L1	19.4	5.2	46.0
0.654000	34.2	Off	L1	19.4	11.8	46.0

Test Mode :	Mode 3	**Temperature :**	20~22℃
Test Engineer :	Novic Chiang	**Relative Humidity :**	40~42%
Test Voltage :	120Vac / 60Hz	**Phase :**	Neutral
Function Type :	WCDMA1700 Idle + WLAN Idle(5G) + BT Idle + GPS Rx + Sleeve (USB + DC Jack) + MP3/Camera + Battery 3600mA + AC wall Adapter 1 +USB Cable Link with NB		
Remark :	All emissions not reported here are more than 10 dB below the prescribed limit.		

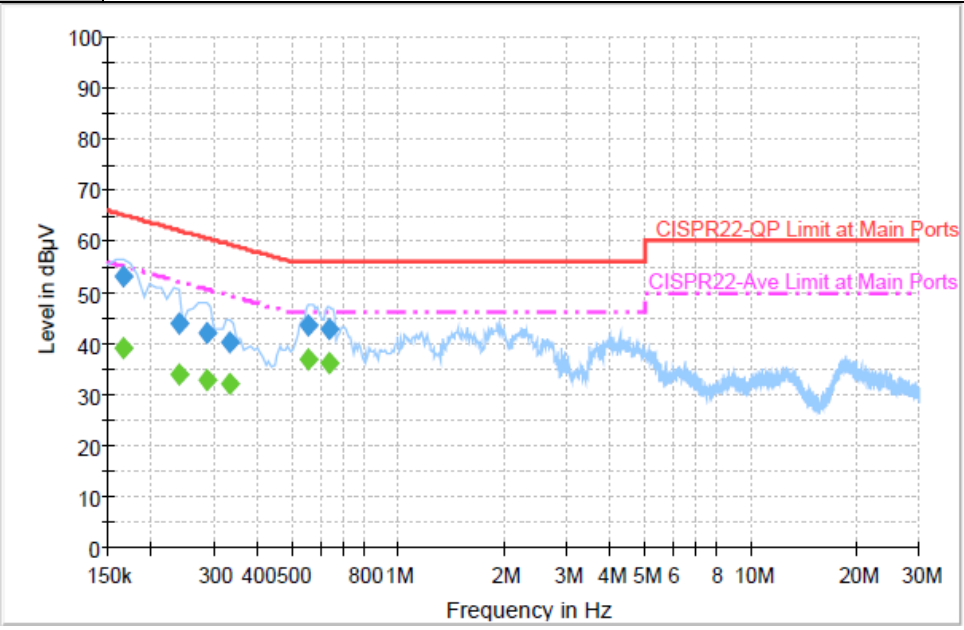

Final Result 1

Frequency (MHz)	QuasiPeak (dBµV)	Filter	Line	Corr. (dB)	Margin (dB)	Limit (dBµV)
0.166000	53.1	Off	N	19.4	12.1	65.2
0.238000	44.0	Off	N	19.4	18.2	62.2
0.286000	42.1	Off	N	19.4	18.5	60.6
0.334000	40.1	Off	N	19.4	19.3	59.4
0.558000	43.7	Off	N	19.4	12.3	56.0
0.638000	42.9	Off	N	19.4	13.1	56.0

Final Result 2

Frequency (MHz)	Average (dBµV)	Filter	Line	Corr. (dB)	Margin (dB)	Limit (dBµV)
0.166000	39.1	Off	N	19.4	16.1	55.2
0.238000	33.9	Off	N	19.4	18.3	52.2
0.286000	32.7	Off	N	19.4	17.9	50.6
0.334000	32.0	Off	N	19.4	17.4	49.4
0.558000	36.9	Off	N	19.4	9.1	46.0
0.638000	36.3	Off	N	19.4	9.7	46.0

3.2. Test of Radiated Emission Measurement

3.2.1. Limit of Radiated Emission

The emissions from an intentional radiator shall not exceed the field strength levels specified in the following table:

Frequency (MHz)	Field Strength (microvolts/meter)	Measurement Distance (meters)
0.009 – 0.490	2400/F(kHz)	300
0.490 – 1.705	24000/F(kHz)	30
1.705 – 30.0	30	30
30 – 88	100	3
88 – 216	150	3
216 - 960	200	3
Above 960	500	3

3.2.2. Measuring Instruments

See list of measuring instruments of this test report.

3.2.3. Test Procedures

1. The EUT was placed on a turntable with 0.8 meter above ground.
2. The EUT was set 10 meters for frequency 30 MHz to 1000 MHz and 3 meters for frequency above 1000 MHz from the receiving antenna which was mounted on the top of a variable height antenna tower.
3. The table was rotated 360 degrees to determine the position of the highest radiation.
4. The antenna is a Bi-Log antenna and its height is adjusted between one meter and four meters above ground to find the maximum value of the field strength for both horizontal polarization and vertical polarization of the antenna.
5. For each suspected emission, the EUT was arranged to its worst case and then tune the antenna tower (from 1 m to 4 m) and turntable (from 0 degree to 360 degrees) to find the maximum reading.
6. Set the test-receiver system to Peak Detect Function and specified bandwidth with Maximum Hold Mode.
7. If the emission level of the EUT in peak mode was 3 dB lower than the limit specified, then testing will be stopped and peak values of EUT will be reported, otherwise, the emissions will be repeated one by one using the quasi-peak method and reported
8. Emission level (dBuV/m) = 20 log Emission level (uV/m)
9. Corrected Reading: Antenna Factor + Cable Loss + Read Level - Preamp Factor = Level

3.2.4. Test Setup of Radiated Emission

<Radiated Emissions Frequency: 30 MHz to 1000 MHz>

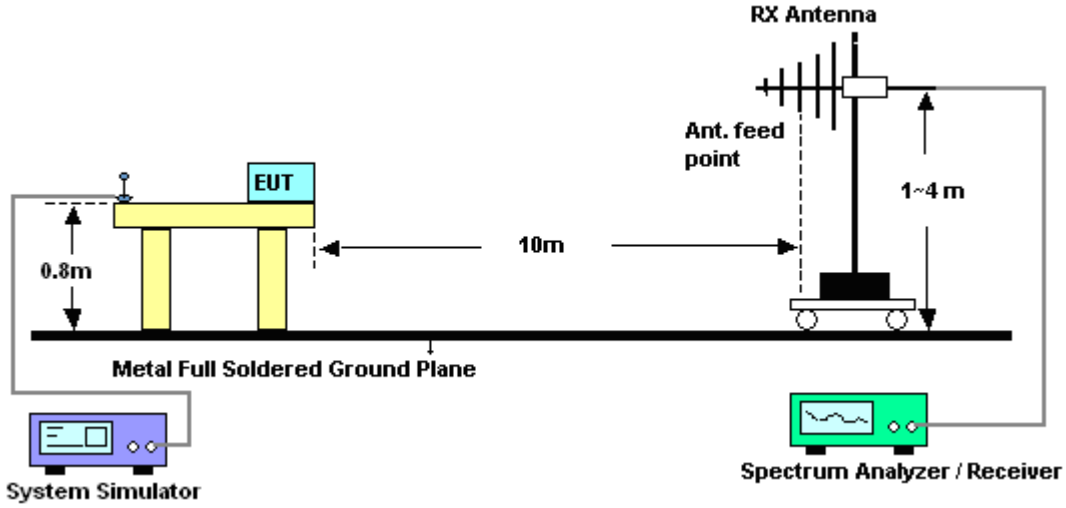

<Radiated Emissions Frequency: above 1000 MHz >

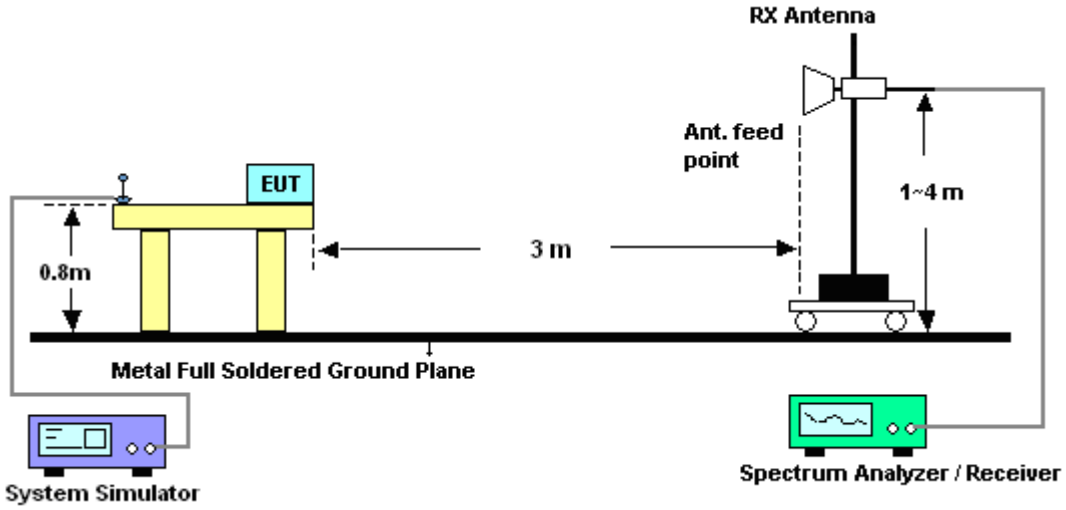

3.2.5. Test Result of Radiated Emission

Test Mode :	Mode 5	**Temperature :**	25~26°C
Test Engineer :	Lewis He	**Relative Humidity :**	53~56%
Test Distance :	10m	**Polarization :**	Horizontal
Function Type :	WCDMA1700 Idle + WLAN Idle(5G) + BT Idle + MP3/Camera + Sleeve (USB + DC Jack) + USB Cable Link with NB + AC wall Adapter 2 + Battery 3600mA		

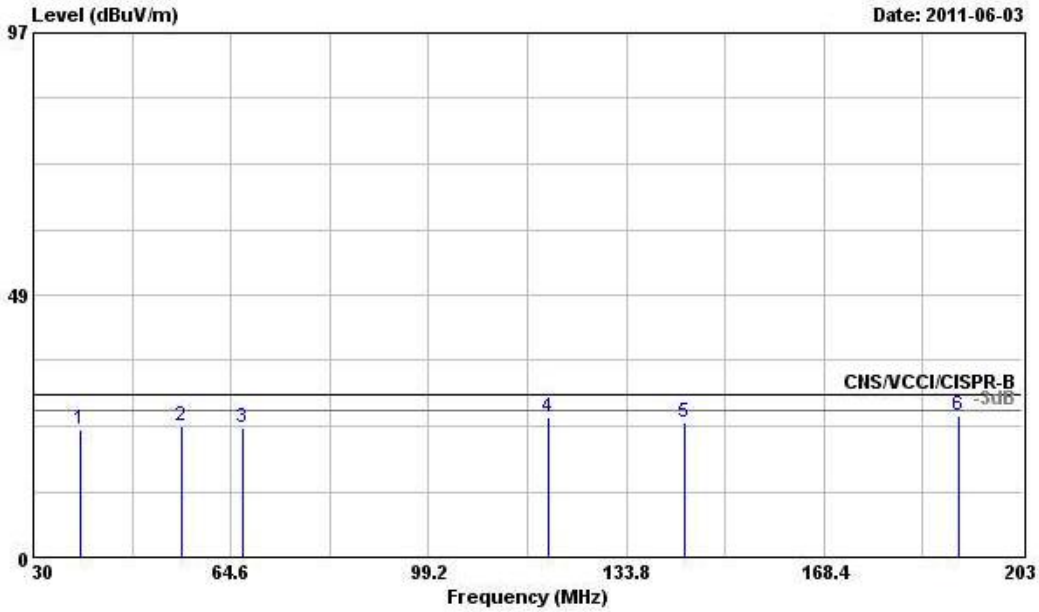

Site : OS02-LK
Condition : CNS/VCCI/CISPR-B 10m 6112D2444 / 20110226 HORIZONTAL
Project : FD 140905
Mode : Mode 5
Temp : 25.C
Humidity : 56%

	Freq	Level	Over Limit	Limit Line	Read Level	Antenna Factor	Cable Loss	Preamp Factor	Table Pos	Ant Pos	Remark
	MHz	dBuV/m	dB	dBuV/m	dBuV	dB/m	dB	dB	deg	cm	
1	38.130	23.67	-6.33	30.00	32.44	14.34	0.85	23.96	---	---	Peak
2	55.950	24.34	-5.66	30.00	39.13	7.59	1.39	23.77	---	---	Peak
3	66.680	23.84	-6.16	30.00	39.51	6.52	1.51	23.70	---	---	Peak
4	120.130	25.97	-4.03	30.00	35.51	12.18	1.85	23.57	---	---	Peak
5	144.010	24.93	-5.07	30.00	35.34	11.01	2.12	23.54	---	---	Peak
6 @	191.930	26.07	-3.93	30.00	37.84	9.09	2.62	23.48	---	---	Peak

Test Mode :	Mode 5	**Temperature :**	25~26°C
Test Engineer :	Lewis He	**Relative Humidity :**	53~56%
Test Distance :	10m	**Polarization :**	Horizontal
Function Type :	WCDMA1700 Idle + WLAN Idle(5G) + BT Idle + MP3/Camera + Sleeve (USB + DC Jack) + USB Cable Link with NB + AC wall Adapter 2 + Battery 3600mA		

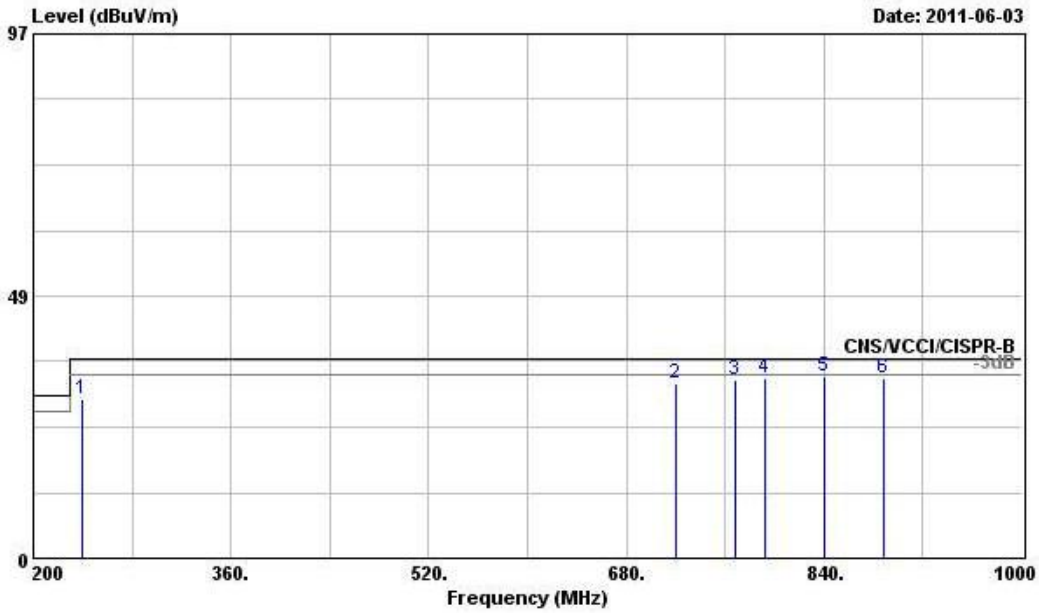

Site : OS02-LK
Condition : CNS/VCCI/CISPR-B 10m 6112D2444 / 20110226 HORIZONTAL
Project : FD 140905
Mode : Mode 5
Temp : 25.C
Humidity : 56%

	Freq	Level	Over Limit	Limit Line	Read Level	Antenna Factor	Cable Loss	Preamp Factor	Table Pos	Ant Pos	Remark
	MHz	dBuV/m	dB	dBuV/m	dBuV	dB/m	dB	dB	deg	cm	
1	240.000	29.44	-7.56	37.00	37.79	11.81	3.27	23.43	360	400	QP
2	720.000	32.23	-4.77	37.00	29.84	19.49	6.23	23.33	---	---	Peak
3 @	768.000	33.13	-3.87	37.00	29.84	20.23	6.40	23.34	---	---	Peak
4 @	792.000	33.40	-3.60	37.00	29.67	20.60	6.48	23.35	---	---	Peak
5 @	840.000	33.73	-3.27	37.00	29.38	20.90	6.78	23.33	360	100	Peak
6 @	888.000	33.46	-3.54	37.00	28.74	21.13	6.89	23.30	---	---	Peak

Test Mode :	Mode 5	**Temperature :**	25~26°C
Test Engineer :	Lewis He	**Relative Humidity :**	53~56%
Test Distance :	10m	**Polarization :**	Vertical
Function Type :	WCDMA1700 Idle + WLAN Idle(5G) + BT Idle + MP3/Camera + Sleeve (USB + DC Jack) + USB Cable Link with NB + AC wall Adapter 2 + Battery 3600mA		

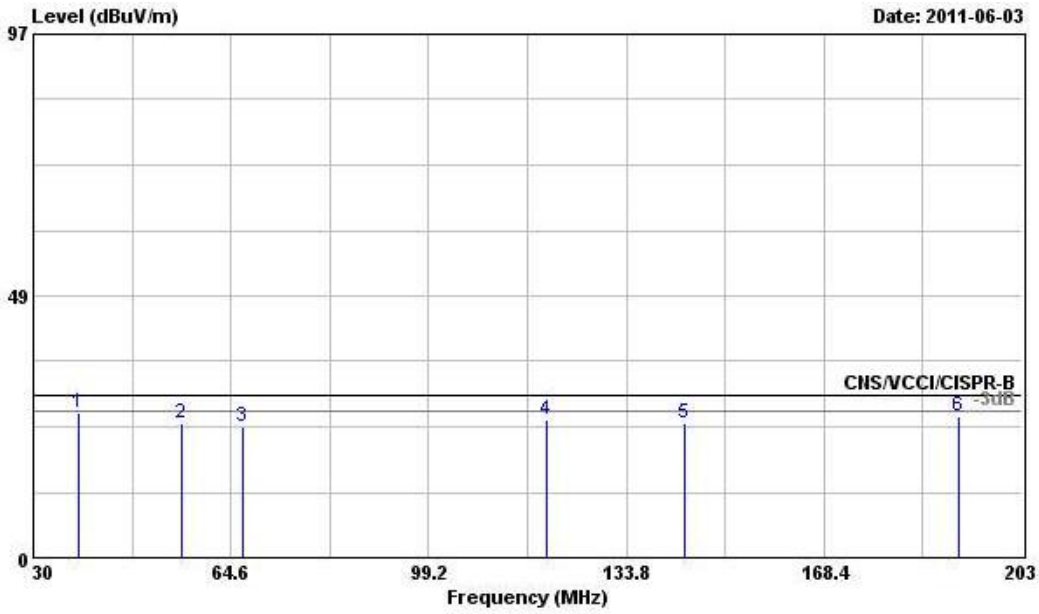

Site : OS02-LK
Condition : CNS/VCCI/CISPR-B 10m 6112D2444 / 20110226 VERTICAL
Project : FD 140905
Mode : Mode 5
Temp : 25.C
Humidity : 56%

	Freq	Level	Over Limit	Limit Line	Read Level	Antenna Factor	Cable Loss	Preamp Factor	Table Pos	Ant Pos	Remark
	MHz	dBuV/m	dB	dBuV/m	dBuV	dB/m	dB	dB	deg	cm	
1 @	37.920	26.93	-3.07	30.00	35.70	14.34	0.85	23.96	360	100	QP
2	56.130	24.91	-5.09	30.00	39.70	7.59	1.39	23.77	360	100	QP
3	66.680	24.17	-5.83	30.00	39.84	6.52	1.51	23.70	---	---	Peak
4	120.000	25.66	-4.34	30.00	35.20	12.18	1.85	23.57	360	100	QP
5	144.000	25.00	-5.00	30.00	35.41	11.01	2.12	23.54	360	100	QP
6 @	191.930	26.23	-3.77	30.00	38.00	9.09	2.62	23.48	---	---	Peak

Test Mode :	Mode 5	**Temperature :**	25~26°C
Test Engineer :	Lewis He	**Relative Humidity :**	53~56%
Test Distance :	10m	**Polarization :**	Vertical
Function Type :	WCDMA1700 Idle + WLAN Idle(5G) + BT Idle + MP3/Camera + Sleeve (USB + DC Jack) + USB Cable Link with NB + AC wall Adapter 2 + Battery 3600mA		

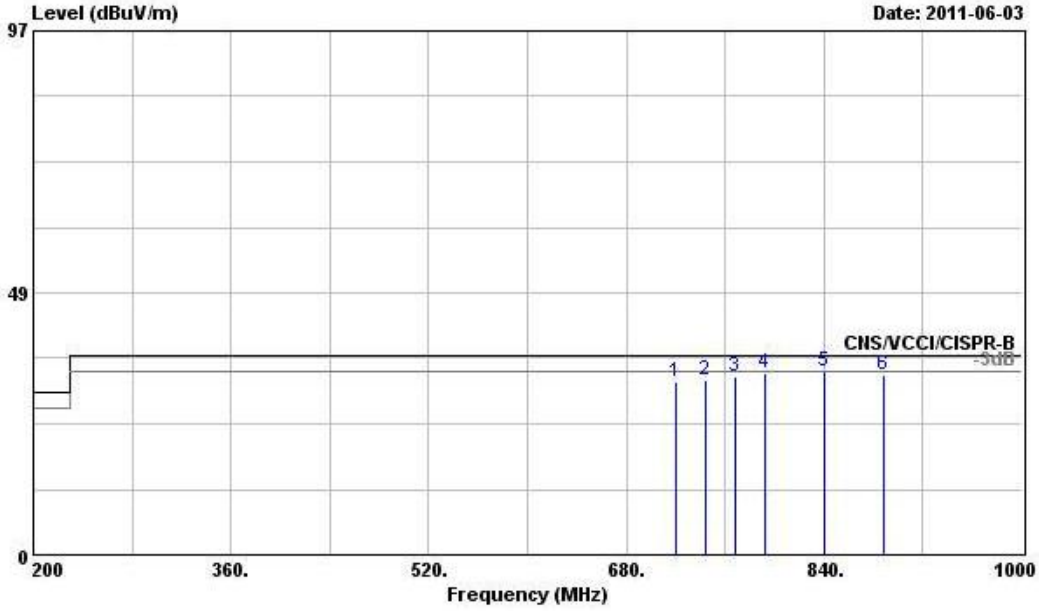

Site : OS02-LK
Condition : CNS/VCCI/CISPR-B 10m 6112D2444 / 20110226 VERTICAL
Project : FD 140905
Mode : Mode 5
Temp : 25.C
Humidity : 56%

	Freq	Level	Over Limit	Limit Line	Read Level	Antenna Factor	Cable Loss	Preamp Factor	Table Pos	Ant Pos	Remark
	MHz	dBuV/m	dB	dBuV/m	dBuV	dB/m	dB	dB	deg	cm	
1	720.000	31.89	-5.11	37.00	29.50	19.49	6.23	23.33	360	200	QP
2	744.000	32.25	-4.75	37.00	29.39	19.86	6.33	23.33	360	200	QP
3 @	768.000	33.09	-3.91	37.00	29.80	20.23	6.40	23.34	360	200	QP
4 @	792.000	33.63	-3.37	37.00	29.90	20.60	6.48	23.35	360	200	QP
5 @	840.000	33.86	-3.14	37.00	29.51	20.90	6.78	23.33	360	200	QP
6 @	888.000	33.22	-3.78	37.00	28.50	21.13	6.89	23.30	---	---	Peak

Test Mode :	Mode 5	**Temperature :**	25~26°C
Test Engineer :	Lewis He	**Relative Humidity :**	53~56%
Test Distance :	3m	**Polarization :**	Horizontal
Function Type :	WCDMA1700 Idle + WLAN Idle(5G) + BT Idle + MP3/Camera + Sleeve (USB + DC Jack) + USB Cable Link with NB + AC wall Adapter 2 + Battery 3600mA		

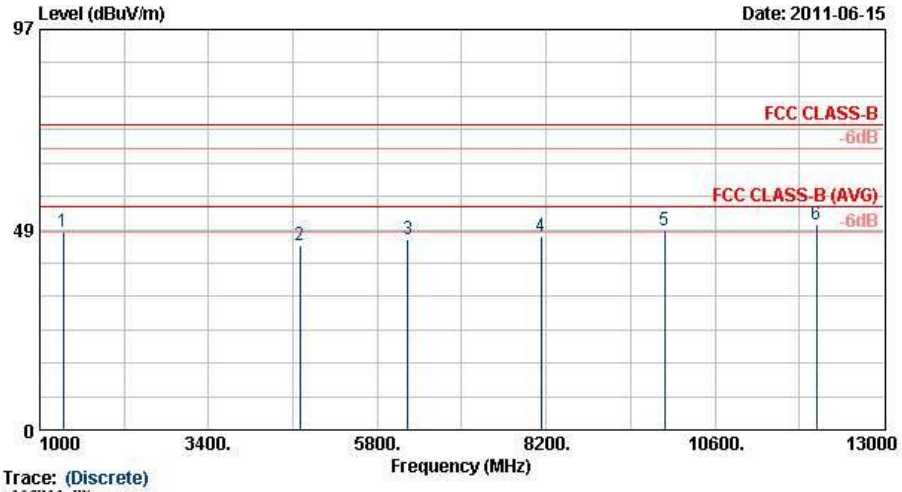

Site : 03CH06-HY
Condition : FCC CLASS-B 3m HF-ANT_080824 HORIZONTAL
Project : FD 140905
Memo : Mode 5

	Freq	Level	Over Limit	Limit Line	Read Level	Antenna Factor	Cable Loss	Preamp Factor	Ant Pos	Table Pos	Remark
	MHz	dBuV/m	dB	dBuV/m	dBuV	dB/m	dB	dB	cm	deg	
1	1332.00	47.83	-26.17	74.00	71.57	28.20	2.62	54.56	---	---	Peak
2	4694.00	44.73	-29.27	74.00	60.50	34.90	5.68	56.35	---	---	Peak
3	6228.00	46.03	-27.97	74.00	60.54	35.99	6.74	57.25	---	---	Peak
4	8126.00	46.76	-27.24	74.00	59.76	36.18	7.44	56.61	---	---	Peak
5	9884.00	48.16	-25.84	74.00	59.80	37.20	8.05	56.88	---	---	Peak
6 @	12046.00	49.64	-24.36	74.00	55.46	38.93	9.29	54.04	---	---	Peak

Test Mode :	Mode 5	**Temperature :**	25~26°C
Test Engineer :	Lewis He	**Relative Humidity :**	53~56%
Test Distance :	3m	**Polarization :**	Vertical
Function Type :	WCDMA1700 Idle + WLAN Idle(5G) + BT Idle + MP3/Camera + Sleeve (USB + DC Jack) + USB Cable Link with NB + AC wall Adapter 2 + Battery 3600mA		

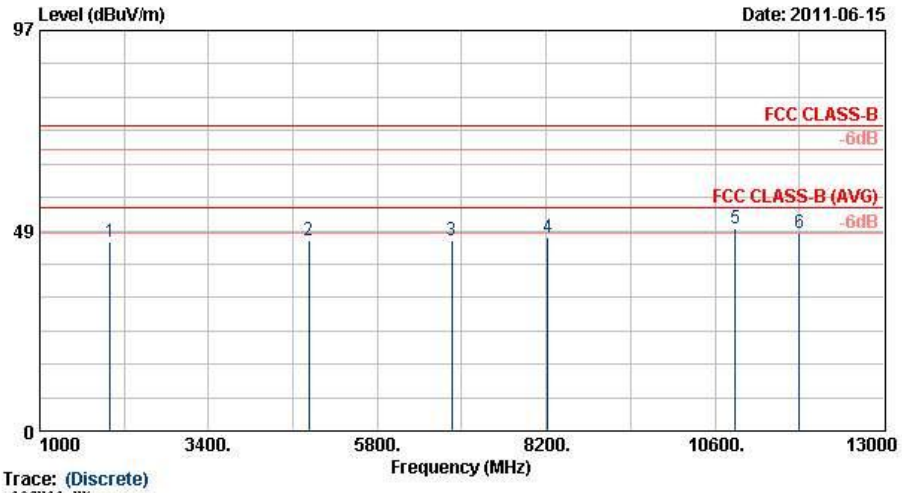

Site : 03CH06-HY
Condition : FCC CLASS-B 3m HF-ANT_090824 VERTICAL
Project : FD 140905
Memo : Mode 5

	Freq	Level	Over Limit	Limit Line	Read Level	Antenna Factor	Cable Loss	Preamp Factor	Ant Pos	Table Pos	Remark
	MHz	dBuV/m	dB	dBuV/m	dBuV	dB/m	dB	dB	cm	deg	
1	1996.00	45.88	-28.12	74.00	65.27	32.00	3.40	54.79	---	---	Peak
2	4822.00	46.09	-27.91	74.00	61.87	34.90	5.77	56.45	---	---	Peak
3	6854.00	46.20	-27.80	74.00	60.08	36.24	7.02	57.13	---	---	Peak
4	8222.00	46.78	-27.22	74.00	59.86	36.16	7.37	56.60	---	---	Peak
5 @	10884.00	48.87	-25.13	74.00	58.00	37.98	8.71	55.82	---	---	Peak
6	11798.00	47.82	-26.18	74.00	54.95	38.57	9.06	54.76	---	---	Peak

4. List of Measuring Equipment

Instrument	Manufacturer	Model No.	Serial No.	Characteristics	Calibration Date	Due Date	Remark
EMI Test Receive	R&S	ESCS 30	100356	9KHz – 2.75GHz	Aug. 16, 2010	Aug. 15, 2011	Conduction (CO05-HY)
Two-LISN	R&S	ENV216	11-100081	9KHz – 30MHz	Dec. 03, 2010	Dec. 02, 2011	Conduction (CO05-HY)
Two-LISN	R&S	ENV216	11-100080	9KHz – 30MHz	Dec. 01, 2010	Nov. 30, 2011	Conduction (CO05-HY)
AC Power Source	APC	APC-1000W	N/A	N/A	N/A	N/A	Conduction (CO05-HY)
ISN	Teseq GmbH	ISN T400A	25696	N/A	Jun. 16, 2011	Jun. 15, 2012	Conduction (CO05-HY)
ISN	Teseq GmbH	ISN T800	27134	N/A	Jun. 16, 2011	Jun. 15, 2012	Conduction (CO05-HY)
DC- LISN	R&S	ESH3-26	1000485	0.1MHz~200MHz	Jun. 08, 2011	Jun. 07, 2012	Conduction (CO05-HY)
DC- LISN	R&S	ESH3-26	1000484	0.1MHz~200MHz	Jun. 08, 2011	Jun. 07, 2012	Conduction (CO05-HY)
Amplifier	COM-POWER	PA-103	161045	1MHz – 1GHz	Mar. 28, 2011	Mar. 27, 2012	Radiation (OS02-LK)
Spectrum Analyzer	R&S	FSP	100642	9 kHz – 7 GHz	Jan. 25, 2011	Jan. 24, 2012	Radiation (OS02-LK)
Receiver	R&S	ESCS 30	847793/003	9 kHz~2.75 GHz	Sep. 08, 2010	Sep. 07, 2011	Radiation (OS02-LK)
Bilog Antenna	CHASE	CBL6112D	2444	30 MHz - 2GHz	Feb. 26, 2011	Feb. 25, 2012	Radiation (OS02-LK)
Turn Table	EMCO	2080	9711-1090	0~360 degree	N/A	N/A	Radiation (OS02-LK)
Antenna Mast	EMCO	2075	9711-2114	1 m~4 m	N/A	N/A	Radiation (OS02-LK)

Instrument	Manufacturer	Model No.	Serial No.	Characteristics	Calibration Date	Due Date	Remark
Spectrum Analyzer	R&S	FSP40	100057	9KHz-40GHz	Oct. 25, 2010	Oct. 24, 2011	Radiation (03CH06-HY)
EMI TEST RECEIVER	R&S	ESCI 7	100724	9kHz~7GHz	Aug.19, 2010	Aug.19, 2011	Radiation (03CH06-HY)
Bilog Antenna	SCHAFFNER	CBL6112B	2885	30MHz -2GHz	Oct. 31, 2010	Oct. 31, 2011	Radiation (03CH06-HY)
Double Ridge Horn Antenna	EMCO	3117	00066583	1GHz~18GHz	Aug. 02, 2010	Aug. 01, 2011	Radiation (03CH06-HY)
Double Ridge Horn Antenna	Training Research	AH-0801	95119	8GHz~18GHz	Oct. 20, 2010	Oct. 19, 2011	Radiation (03CH06-HY)
SHF-EHF Horn Antenna	SCHWARZBECK	BBHA 9170	BBHA9170251	15GHz- 40GHz	Oct. 18, 2010	Oct. 17, 2011	Radiation (03CH06-HY)
Pre Amplifier	Agilent	8449B	3008A01917	1GHz- 26.5GHz	Apr. 14, 2011	Apr. 13, 2012	Radiation (03CH06-HY)
Amplifier	Agilent	310N	186713	9KHz~1GHz	Apr. 14, 2011	Apr. 13, 2012	Radiation (03CH06-HY)
Loop Antenna	R&S	HFH2-Z2	860004/001	9 kHz~30 MHz	Jul. 29, 2010	Jul. 28, 2011	Radiation (03CH06-HY)
System Simulator	R&S	CMU200	117995	N/A	Aug. 11, 2010	Aug.10, 2011	-
GPS Station	T&E	GS-50	N/A	N/A	N/A	N/A	-

5. Uncertainty of Evaluation

Uncertainty of Conducted Emission Measurement (150 kHz ~ 30 MHz)

Contribution	Uncertainty of X_i		$u(X_i)$
	dB	Probability Distribution	
Receiver Reading	0.10	Normal (k=2)	0.05
Cable Loss	0.10	Normal (k=2)	0.05
AMN Insertion Loss	2.50	Rectangular	0.63
Receiver Specification	1.50	Rectangular	0.43
Site Imperfection	1.39	Rectangular	0.80
Mismatch	+0.34 / -0.35	U-Shape	0.24
Combined Standard Uncertainty Uc(y)	**1.13**		
Measuring Uncertainty for a Level of Confidence of 95% (U = 2Uc(y))	**2.26**		

Uncertainty of Radiated Emission Measurement (30 MHz ~ 1000 MHz)

Contribution	Uncertainty of X_i		$u(X_i)$
	dB	Probability Distribution	
Receiver Reading	0.41	Normal (k=2)	0.21
Antenna Factor Calibration	0.83	Normal (k=2)	0.42
Cable Loss Calibration	0.25	Normal (k=2)	0.13
Pre-Amplifier Gain Calibration	0.27	Normal (k=2)	0.14
RCV/SPA Specification	2.50	Rectangular	0.72
Antenna Factor Interpolation for Frequency	1.00	Rectangular	0.29
Site Imperfection	1.43	Rectangular	0.83
Mismatch	+0.39 / -0.41	U-Shape	0.28
Combined Standard Uncertainty Uc(y)	**1.27**		
Measuring Uncertainty for a Level of Confidence of 95% (U = 2Uc(y))	**2.54**		

Uncertainty of Radiated Emission Measurement (1 GHz ~ 40 GHz)

Contribution	Uncertainty of X_i		$u(X_i)$	C_i	$C_i * u(X_i)$
	dB	Probability Distribution			
Receiver Reading	±0.10	Normal (k=2)	0.10	1	0.10
Antenna Factor Calibration	±1.70	Normal (k=2)	0.85	1	0.85
Cable Loss Calibration	±0.50	Normal (k=2)	0.25	1	0.25
Receiver Correction	±2.00	Rectangular	1.15	1	1.15
Antenna Factor Directional	±1.50	Rectangular	0.87	1	0.87
Site Imperfection	±2.80	Triangular	1.14	1	1.14
Mismatch Receiver VSWR Γ1 = 0.197 Antenna VSWR Γ2 = 0.194 Uncertainty = 20Log(1-Γ1*Γ2)	+0.34 / -0.35	U-Shape	0.244	1	0.244
Combined Standard Uncertainty Uc(y)	**2.36**				
Measuring Uncertainty for a Level of Confidence of 95% (U = 2Uc(y))	**4.72**				

Appendix A. Photographs of EUT

Please refer to Sporton report number EP140905 as below.