7035, 8255 & 8260 Terminals

User Manual

March 9, 2000 Part No. 80439.C

TEKLOGIX

ISO 9001 Certified

© Copyright 2000 by Teklogix Inc., Mississauga, Ontario

This document and the information it contains is the property of Teklogix Inc., is issued in strict confidence, and is not to be reproduced or copied, in whole or in part, except for the sole purpose of promoting the sale of Teklogix manufactured goods and services. Furthermore, this document is not to be used as a basis for design, manufacture, or sub-contract, or in any manner detrimental to the interests of Teklogix Inc.

All trademarks are the property of their respective holders.

Return-To-Factory Warranty

Teklogix warrants a return-to-factory warranty for a period of 90 days from shipment or 120 days from shipment where Teklogix installs the equipment. The warranty on Teklogix manufactured equipment does not extend to any product that has been tampered with, altered, or repaired by any person other than an employee of an authorized Teklogix service organization. See Teklogix terms and conditions of sale for full details.

Service

When requesting service, please provide information concerning the nature of the failure and the manner in which the equipment was used when the failure occurred. Type, model, and serial number should also be provided. Before returning any products to the factory, call the Service Centre in your region for a Return Authorization number. This will help us to service your product more efficiently.

Disclaimer

Every effort has been made to make this material complete, accurate and up-to-date. Teklogix Inc. reserves the right to make changes without notice and shall not be held responsible for damages resulting from reliance on the material presented in this manual.

Declaration Of Conformity

Product:	7035 Hand-Held Terminal
Application of Council Directive(s):	EMC Directive: 89/336/EEC
Conformity Declared to Standards:	EN 55022: 1994; Class B; ETS 300 328: 1996 EN 50082-1: 1997; ETS 300 683: 1997, ETS 300 826: 1997 EN 61000-4-2; ±4 kV CD; ±8 kV AD EN 61000-4-3; 3 V/m, 80-1000 MHz
Manufacturer:	Teklogix Incorporated 2100 Meadowvale Boulevard Mississauga, Ontario Canada L5N 7J9
Year of Manufacture:	1999
Manufacturer's Address in the European Community:	Teklogix S.A. Parc Club Du Golf - Bat 1. 13856 Aix-En-Provence Cedex 3; France
Type of Equipment:	Information Technology Equipment
Equipment Class:	Commercial and Light Industrial

Declaration Of Conformity

Product:	8255 Vehicle-Mount Terminal
Application of Council Directive(s):	EMC Directive: 89/336/EEC Low Voltage Directive: 73/23/EEC
Conformity Declared to Standards:	EN 55022: 1998; Class B; ETS 300 826: 1997 EN 50082-1: 1997; ETS 300 683: 1997 EN 61000-4-2; ±4 kV CD; ±8 kV AD EN 61000-4-3; 3 V/m, 80-1000 MHz ISO 7637-1: 1990 ISO 7637-2: 1990 EN 60950: 1992 + A1 + A2 + A3 + A4 + A11
Manufacturer:	Teklogix Incorporated 2100 Meadowvale Blvd. Mississauga, Ontario Canada L5N 7J9
Year of Manufacture:	1999
Manufacturer's Address in European Community:	Teklogix S.A. Parc Club Du Golf - Bat 1. 13856 Aix-En-Provence Cedex 3; France
Type of Equipment:	Information Technology
Equipment Class:	Commercial and Light Industrial

Declaration Of Conformity

Product:	8255 LCD Vehicle-Mount Terminal
Application of Council Directive(s):	EMC Directive: 89/336/EEC Low Voltage Directive: 73/23/EEC
Conformity Declared to Standards:	EN 55022: 1998; Class B; ETS 300 826: 1997 EN 50082-1: 1997; ETS 300 683: 1997 EN 61000-4-2; ±4 kV CD; ±8 kV AD EN 61000-4-3; 3 V/m, 80-1000 MHz ISO 7637-1: 1990 ISO 7637-2: 1990 EN 60950: 1992 + A1 + A2 + A3 + A4 + A11
Manufacturer:	Teklogix Incorporated 2100 Meadowvale Blvd. Mississauga, Ontario Canada L5N 7J9
Year of Manufacture:	1999
Manufacturer's Address in European Community:	Teklogix S.A. Parc Club Du Golf - Bat 1. 13856 Aix-En-Provence Cedex 3; France
Type of Equipment:	Information Technology
Equipment Class:	Commercial and Light Industrial

Declaration Of Conformity

Product:	8260 Vehicle-Mount Terminal
Application of Council Directive(s):	EMC Directive: 89/336/EEC Low Voltage Directive: 73/23/EEC
Conformity Declared to Standards:	EN 55022: 1998; Class B; ETS 300 826: 1997 EN 50082-1: 1997; ETS 300 683: 1997 EN 61000-4-2; ±4 kV CD; ±8 kV AD EN 61000-4-3; 3 V/m, 80-1000 MHz ISO 7637-1: 1990 ISO 7637-2: 1990 EN 60950: 1992 + A1 + A2 + A3 + A4 + A11
Manufacturer:	Teklogix Incorporated 2100 Meadowvale Blvd. Mississauga, Ontario Canada L5N 7J9
Year of Manufacture:	1999
Manufacturer's Address in European Community:	Teklogix S.A. Parc Club Du Golf - Bat 1. 13856 Aix-En-Provence Cedex 3; France
Type of Equipment:	Information Technology
Equipment Class:	Commercial and Light Industrial

TABLE OF CONTENTS

Program License Agreement ix
Safety Summary xi

Chapter 1: Introduction

1.1 About This Manual 3
1.2 Text Conventions 4
1.3 About The Terminals 5
1.3.1 Features 5
1.3.2 The 7035 Hand-Held Terminal 7
1.3.3 7035 Integrated Scanner Patent Numbers 11
1.3.4 The 8255 Vehicle-Mount Terminal – LCD or VFD 11
1.3.5 The 8260 Vehicle-Mount Terminal - LCD Only 12

Chapter 2: Basic Assembly And Operation

2.1 Preparing The 7035 For Operation 17
2.1.1 Connecting The 7035 Whip Antenna 17
2.1.2 The Battery Pack – Removing And Installing. 17
2.1.3 Attaching The 7035 Hand-Strap Or The Pistol Grip 19
2.2 Installing 8255/8260 Vehicle-Mount Terminals. 20
2.2.1 Mounting The 8255 Vehicle-Mount Terminal 20
2.2.2 Using The Cradle And Cradle Mounting Plate 21
2.2.3 Mounting The 8260 Terminal 23
2.2.4 Connecting The 8255/8260 Antenna 24
2.2.5 Installing The Cables 24
2.2.6 Installing The Extension Power Cable 25
2.3 Basic Operation Of The Terminals 26
2.3.1 Turning The Terminals On And Off 26
2.3.2 Resetting Terminals 27

2.3.3 The Display Menu 28
2.3.4 The Keyboard 30
2.4 The Indicators 39
2.4.1 LEDs 39
2.4.2 Onscreen Indicators – 7035 Only 40
2.4.3 Softkeys 42
2.4.4 The Battery Gauge (7035 Only) 42
2.4.5 The Beeper 42
2.5 The Display 44
2.5.1 Adjusting The Display Contrast 44
2.5.2 Panning 45
2.6 The Integrated Scanner Option – 7035 Only 46
2.6.1 Warnings 46
2.6.2 Operation Of The Integrated Scanner 46
2.6.3 Scanning Techniques 48
2.7 Infrared (IrDA) Port – 7035 Only 48
2.8 Maintenance 48
2.8.1 Cleaning All Terminals 48
2.8.2 7035 – Special Instructions 49
2.8.3 Maintaining The 7035 Battery 49

Chapter 3: Tekterm

3.1 Introduction 53
3.2 Launching Tekterm 53
3.3 Working With Application Session Windows 54
3.4 Radio Statistics Screens 54
3.4.1 Viewing A Radio Statistics Screen 54
3.4.2 802.11 Radio Statistics Screen 55
3.4.3 TRX7370 NB & 802.11 SS Radio Statistics Screen 56
3.4.4 TRX7460 Mobitex WAN Radio Statistics Screen 57
3.5 Resetting Radio Statistics 60
3.6 Exiting Tekterm 60

Chapter 4: TESS Operations

4.1 Configuration 63
4.2 Working With Multiple Sessions 63

4.3 The Field Types 64
4.4 Data Entry 64
4.4.1 TESS Edit Modes And Cursor Movement 65
4.4.2 <CLR> Key Behaviour In TESS 66
4.4.3 <DEL> Key Behaviour In TESS 67
4.5 Lock Messages 69
4.6 Control Commands 69

Chapter 5: ANSI Operations

5.1 Configuration 73
5.2 Sending Data To The Host 73
5.3 Teklogix Keyboard And VT220 Equivalent Keys. 74
5.4 Working With Sessions 75
5.4.1 Establishing A New Session. 75
5.4.2 Listing Sessions And Moving To Other Sessions 75
5.4.3 Closing A Session 76
5.4.4 Printing A Screen 76
5.4.5 Smart Echo – Disabling 76

Chapter 6: Setting Parameters

6.1 Using The Parameter Manager 81
6.2 Exiting Tekterm And Accessing The Display Menu 81
6.3 Working With Menus 83
6.3.1 Softkey Function Keys 83
6.3.2 Displaying Sub-Menus 84
6.3.3 Numeric Parameters 84
6.3.4 Y/N Parameters 85
6.3.5 Alpha Parameters 85
6.3.6 String Entry Parameters 85
6.3.7 Saving Changes To Parameters 87
6.3.8 Resetting The Terminal 87
6.3.9 Resetting Parameters To Default Values 87
6.4 Terminal Parameters. 88
6.4.1 Displaying The Parameters Menu 88
6.5 System. 90
6.5.1 Volume And Contrast 90

6.5.2 Key Click 91
6.5.3 Typematic Rpt 91
6.5.4 Panning 92
6.5.5 Backlight 94
6.5.6 Code Page 95
6.5.7 Font Size – North American And European 96
6.5.8 Font Size – Chinese And Korean 97
6.5.9 Palette Remap 98
6.5.10 Watchdog Timer 99
6.5.11 Power – 7035 Only 99
6.5.12 One-Shot Mode 100
6.6 Scanner 101
6.6.1 Type 101
6.6.2 Options 102
6.6.3 Barcode 105
6.7 Applications 115
6.7.1 ANSI Settings 116
6.7.2 Serial 126
6.7.3 TESS Settings 126
6.7.4 Features 138
6.8 View Manager 139
6.9 Ports– Serial 1 And Console 2 141
6.9.1 Serial 1 And Console 2 Peripheral Options 141
6.9.2 Serial 1 And Console 2 Parameter Settings 142
6.9.3 Setting The Terminal Console Port For Nomad 144
6.9.4 Setting The Terminal Console Port For Scan-See 144
6.10 Global Macros 150
6.10.1 Displaying The Global Macros Menu 150
6.10.2 Displaying The Global Macros Table 151
6.10.3 Choosing An ASCII Character 152
6.10.4 Adding Additional ASCII Characters 152
6.10.5 Programming Special Keys Into Macros 153
6.11 Network 153
6.12 Radio 154
6.13 Sound 154

Chapter 7: Terminal Accessories

7.1 External Bar Code Readers 159
7.1.1 Entering Data With A Bar Code Reader 159
7.2 The 7035 Battery 160
7.2.1 Lithium-Ion Battery Safety Precautions 161
7.2.2 Lithium-Ion Battery Pack Specifications 162
7.3 The 7942 In-Unit Charger 163
7.3.1 Mounting Bracket 164
7.3.2 Connecting The Power Source 164
7.3.3 In-Unit Charger LED Indicators 164
7.3.4 Inserting The 7035 With Battery In The Charger 165
7.3.5 Charging The Battery 165
7.3.6 Battery Charge Fault Conditions 165
7.3.7 Charger Fault Conditions 166
7.3.8 Removing The Terminal From The In-Unit Charger 166
7.3.9 7942 Charger Specifications 166
7.4 The 7967 Gang Charger 167
7.4.1 Connecting The Power Source 167
7.4.2 Inserting And Charging The Battery 167
7.4.3 Fault Conditions 168
7.4.4 7967 Charger Specifications 169
7.5 Important Charger Safety Instructions 169
7.6 Antenna Types 170
7.7 The 7035 Picker Cradle 171
7.7.1 Mounting Hardware 171
7.7.2 Installation 171
7.7.3 Disassembling The Cradle Before Mounting 172
7.7.4 Mounting The Cradle 173
7.7.5 Installing The Cables 173
7.7.6 Connecting A Cable 173
7.7.7 Connecting The Power Source 174
7.7.8 Attaching A Port Replicator 174
7.7.9 Picker Cradle Maintenance 174
7.7.10 Inserting And Removing The 7035 Terminal 175
7.7.11 Picker Cradle LED Indicator 176

7.7.12 Specifications. 177
7.8 Accessories Part Number List 179

Chapter 8: Specifications

8.1 Radio Specifications 183
8.2 7035 Hand-Held Terminal Specifications 186
8.3 8255/8260 Vehicle-Mount Terminal Specifications 188
8.4 Peripheral Ports 191
8.4.1 Serial Port 1 (COM 1) 191
8.4.2 Serial Port 2 (COM 2) 191
8.5 Memory Expansion Board. 192
8.6 IrDA Port (7035 Only). 192
8.7 Wireless Communication Options 192
8.8 Bar Code Scanning. 193
8.8.1 Internal Scanners (7035 Only) 193
8.8.2 External Scanners 193
8.8.3 Internal Scanner Port (7035 Only) 193
8.9 Internal Scanner Specifications (7035 Only) 194
8.10 Power Management (7035 Only) 197
8.10.1 Power Save States 197
8.11 Lithium-Ion Battery Pack (7035 Only) 199

Appendices

Appendix A: Support Services And Worldwide Offices

A.1 Support Services A-1
A.1.1 North American Helpdesk A-1
A.1.2 International Support. A-1

Appendices

Appendix B: Port Pinouts And Cable Diagrams

B.1 7035 Peripheral Port I/O Connector (28-Pin PCR) B-1
B.2 8255/60 Peripheral Port I/O Connector (28-Pin PCR) B-2
B.3 8255/60 - Expansion Port I/O Connector (36-Pin PCR). B-4

B.4 Internal Scanner Connector B-6
B.5 Flash Serial Download Cable B-6
B.6 28-Pin PCR To 8-Pin DIN Connector – P.N. 19726 . . . . . B-7
B.7 28-Pin PCR To 7-Pin DIN Connector – P.N. 19727 . . . . . B-7
B.8 Flash Serial Download Cable – P.N. 20075. . . . . B-8
B.9 Scanner Wand Adaptor Cable – P.N. 30092. . . . . B-8

Appendix C: ASCII Character Table

Appendix D: Radio Parameters

D.1 TRX7430 WaveLAN/IEEE 802.11 DS SS Radio Parameters D-1
D.2 TRX7440 RangeLAN 802.11 FH SS Radio Parameters D-4
D.3 TRX7370 Narrow Band Radio Parameters D-6
D.3.1 Cellular D-6
D.3.2 Channel D-7
D.3.3 Poll Timing D-9
D.3.4 Power Saving D-11
D.3.5 CIS Data D-11
D.4 TRX7410/10A WLAN 902 Spread Spec Radio Parameters D-12
D.4.1 Channel D-12
D.4.2 WLAN Timing. D-14
D.4.3 Power Saving D-14
D.4.4 CIS Data D-15
D.5 TRX7460 Mobitex Radio D-15

PROGRAM LICENSE AGREEMENT

These products contains proprietary information of Teklogix Inc. as well as the following companies: International Business Machines Corporation, Phoenix Technologies Limited, Datalight, Inc.[1] and Pacific Softworks Incorporated.

Software restrictions are as follows and shall be enforced to the fullest extent possible by applicable law:

i. copying and/or transfer of the software is prohibited; and

ii. reverse assembly, reverse compilation, or other translation of the software is prohibited; and

iii. software is copyrighted and licensed (not sold) and that title to the software is not transferred; and

iv. the owner of the software "DISCLAIMS ALL WARRANTIES WITH RESPECT TO THE USE OF THE SOFTWARE INCLUDING (WITHOUT LIMITATION) ANY WARRANTIES OF MERCHANTABILITY OR FITNESS FOR A PARTICULAR PURPOSE; and

v. liability is limited to the amount paid by the end user for the software; and

vi. the use of the software is allowed only in conjunction with products described herein.

---

[1] Datalight is a registered trademark of Datalight, Inc. FlashFX™ is a trademark of Datalight, Inc. Copyright 1993-1999 Datalight, Inc., All Rights Reserved.

Safety Summary

This safety information is for the protection of both operating and service personnel.

This equipment complies with Class B, Part 15 of the FCC rules. Operation is subject to the following two conditions:

1) This device may not cause harmful interference, and
2) This device must accept any interference received, including interference that may cause undesired operation.

Changes or modifications not expressly approved by the party responsible for compliance could void the user's authority to operate the equipment.

For sites in Canada, Teklogix TRX7430 and TRX7440 802.11 radios require a radio licence unless they are installed totally within a building (user shall obtain licence from Industry Canada).

Use only Teklogix approved peripheral devices and cables.

RF Exposure Requirements

To satisfy FCC RF exposure requirements for mobile transmitting devices, a separation distance of 20 cm or more should be maintained between the antenna of this device and persons during device operation. To ensure compliance, operation at closer than this distance is not recommended.

Do Not Operate In An Explosive Atmosphere

Operating Teklogix equipment where explosive gas is present may result in an explosion.

Do Not Remove Covers Or Open Enclosures

To avoid injury, the equipment covers and enclosures should only be removed by qualified service personnel. Do not operate the equipment without the covers and enclosures properly installed.

Do Not Hold Antenna

To avoid discomfort due to the local heating effect of Radio Frequency energy, do not touch the antenna when a terminal is transmitting.

Use Proper Fuse

For vehicle-mount terminals, use only the fuses specified. A replacement fuse must meet the type, voltage rating and current rating for the fuse it replaces or a fire may result.

Caution!

Danger of explosion if a 7035 battery is incorrectly handled, charged, disposed of or replaced. Replace only with the same or equivalent type recommended by the manufacturer. Dispose of used batteries according to the instructions described in “Maintaining The 7035 Battery” on page 49. Carefully review all battery safety issues listed in the section titled “Lithium-Ion Battery Safety Precautions” on page 161 and page 162.

Vorsicht!

Explosiongefahr bei unsachgemäßem Austausch der Batterie Ersatz nur durch denselben oder einen vom Hersteller empfohlenen gleichwertigen Typ. Entsorgung gebrauchter Batterien nach Angaben des Herstellers.

INTRODUCTION 1

1.1 About This Manual 3
1.2 Text Conventions 4
1.3 About The Terminals 5
1.3.1 Features 5
1.3.2 The 7035 Hand-Held Terminal 7
1.3.3 7035 Integrated Scanner Patent Numbers 11
1.3.4 The 8255 Vehicle-Mount Terminal – LCD or VFD 11
1.3.5 The 8260 Vehicle-Mount Terminal - LCD Only 12

1.1 About This Manual

This manual describes how to operate the Teklogix 7035, 8255 and 8260 terminals.

Chapter 1: Introduction
provides a basic overview of the 7035 hand-held terminal and the 8255 and 8260 vehicle-mount terminals.

Chapter 2: Basic Assembly And Operation
explains how to attach an antenna, how to work with internal and external power supplies and how to mount vehicle-mount terminals. It also describes the LEDs, beeper and display.

Chapter 3: Tekterm
describes how to work with application sessions within the Tekterm program.

Chapter 4: TESS Operations
describes editing modes, status messages and control commands for TESS operations.

Chapter 5: ANSI Operations
provides information about function key equivalents and data entry for ANSI operations.

Chapter 6: Setting Parameters
lists and defines the terminal parameters.

Chapter 7: Terminal Accessories
provides information about using barcode readers and other accessories such as the AC power adaptor, battery chargers, and so on.

Chapter 8: Specifications
contains the technical specifications for the terminal, the battery charger and the COM ports.

Appendix B: Port Pinouts And Cable Diagrams
includes pinouts and diagrams of the ports and cables.

Appendix C: ASCII Character Table
provides a table of ASCII characters.

Appendix D: Radio Parameters
describes the parameters for the TRX7370 Narrowband radio, the TRX7430 Lucent WaveLAN II IEEE 802.11 PC Card and the TRX7440 Proxim RangeLAN 802 8400 PC Card and the TRX7410/TRX7410A 902 SS PC card.

1.2 Text Conventions

Note: *Notes highlight additional helpful information.*

Important: ***These statements provide particularly important instructions or additional information that is critical to the operation of the equipment.***

Warning: ***These statements provide critical information that may prevent physical injury, equipment damage or data loss.***

1.3 About The Terminals

The 7035 hand-held terminal and the 8255 and 8260 vehicle-mount RF terminals all run DOS and can operate in a Teklogix narrowband or 902 spread spectrum RF system using the “cellular” or “new” protocol. They can also operated in a 2.4 GHz 802.11 system.

1.3.1 Features

Some features of these terminals include:

- 7035s are equipped with 33 MHz 486DX CPU with internal cache.
- 8255 and 8260 vehicle-mount terminals are equipped with 66 MHz 486DX CPU with internal cache.
- 8 MB RAM – can be expanded to 16 MB.
- 4 MB of Flash ROM – can be expanded to 8 MB.
- RF connectivity options include:
  - IEEE 802.11 2.4 GHz frequency hopping and direct sequence PC card radios (1-2 Mbps) (TRX7430), (TRX7440).
  - TRX7370 Narrowband PC card-based radios (403-512 MHz, 4800-19200 bps).
  - TRX7410 TekLan 902 MHz direct sequence spread spectrum radios.
- 7035 terminal can support a standard external or optional internal antenna. (Note that the internal antenna is only available with certain 802.11 radios.)
- 8255 and 8260 vehicle-mount terminals are shipped with external antennas that are compatible with the operating RF system.
- Rugged, sealed enclosure, suitable for industrial environments.
- Seamless operation on all Teklogix 32-bit narrowband RF backbones:
  - ANSI, TESS (IBM 3270, IBM5250 and HP2392) emulation application built in.
  - uses high performance TRX7370 narrowband radio.
- Embedded DOS.
- Ergonomic design:
  - 7035 offers one-handed “scan & confirm” design
  - all terminals provide high visibility display fonts and low impact keys.

  - full alphanumeric keyboard.
  - keyboard can be customized using overlays, soft-label function keys and macro keys.
  - vehicle-mount terminals can be ordered with a QWERTY, an ABC or an AZERTY keyboard.
  - autopanning in text mode.
  - 7035 status screen area displays system information – battery gauge, RF link status and shift indicators – as the application is running.
  - vehicle-mounts are equipped with a special set of LEDs that act as shift indicators, blinking when a key is active and staying on when a key is locked “on”.
  - softkey labels are displayed at the bottom of all terminal screens, indicating the function of function keys <F1> to <F4> on the 7035 – <F1> to <F6> on vehicle-mounts.
- Two internal PC Card Type II slots:
  - one slot is reserved for the terminal radio.
  - the extra slot can be used for any PC Card Type II Flash disk, adding from 16 to 128 MB of additional mass storage that appears as an additional drive. (Note that this slot is not available if the terminal is operating with a TRX7370 narrowband or a TRX7410 TekLan 902 spread spectrum radio.)
- RS-232 peripheral port supports decoded and non-decoded scanners, serial printers and COM devices.
- Macro keys to program special characters, keys and/or frequently-used key strokes.

1.3.2 The 7035 Hand-Held Terminal

Figure 1.1 The 7035 Hand-Held

Figure 1.2 7035-I With Optional Pistol Grip Handle

Figure 1.3 7035 Peripheral Port

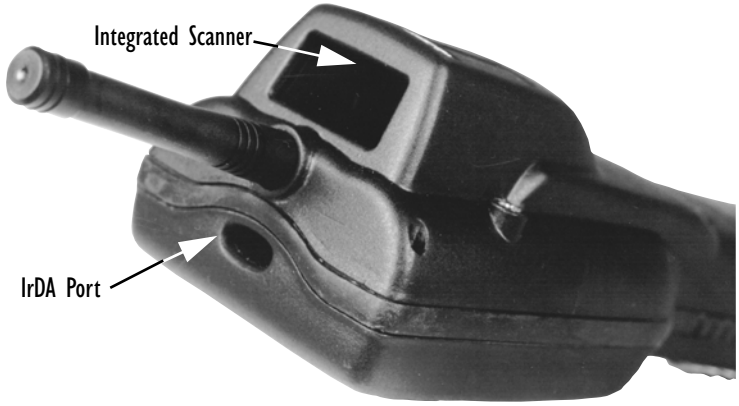

Figure 1.4 Infrared (IrDA) Port

Warning: ***Using controls or adjustments or performing procedures other than those specified herein may result in hazardous radiation exposure.***

A. Laser Radiation Warning Label

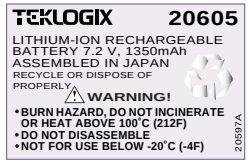

B. Lithium-Ion Battery Warning Label

This label is affixed to the underside of the battery.

C. Model/Serial Number Label

This label lists the following:

- Serial Number
- Reference Number. This field contains a numeric code used to identify the country code, the temperature range of the terminal, and so on.
- Manufactured. This field contains the terminal's date of manufacture.

Figure 1.5 Safety Labels

1.3.3 7035 Integrated Scanner Patent Numbers

The integrated scanner used in the 7035 may be covered by one or more of the following U.S. patents:

4,360,798; 4,369,361; 4,387,297; 4,460,120; 4,496,831; 4,593,186; 4,603.262; 4,607,156; 4,652,750; 4,673,805; 4,736,095; 4,758,717; 4,816,660; 4,845,350; 4,896,026; 4,897,532; 4,923,281; 4,933,538; 4,992,717; 5,015,833; 5,017,765; 5,021,641; 5,029,183; 5,047, 617; 5,103,461; 5,113,445; 5,130,520; 5,140,144; 5,142,550; 5,149,950; 5,157,687; 5,168,148; 5,168,149; 5,180,904; 5,229,591; 5,230,088; 5,235,167; 5,243,655; 5,247,162; 5,250,791; 5,250,792; 5,262,627; 5,280,163; 5,280,164; 5,280,498; 5,304,786; 5,304,788; 5,321,246; 5,367,151; 5,373,148; 5,378.882; 5,377,361; 5,396,053; 5,396,055; 5,399,846; 5,408,081; 5,410,139; 5,410,140; 5,412,198; 5,418,812; 5,420,411; 5,436,440; 5,444,231; 5,449,891; 5,449,893; 5,468,949; 5,479,000; 5,479,002; 5,479,441; 5,504,322; 5,528,621; 5,532,469; 5,543,610; 5,545,889; 5,552,592; 5,578,810; 5,589,680;D305,885; D341,584; D344,501; D359,483; D362,435; D363,700; D363,918; D370,478.

Invention No. 55,358; 62,539; 69,060; 69,187 *(Taiwan)*; No: 1,601,796; 1,907,875; 1,955,269 *(Japan)*.

European Patent 367,299; 414,281; 367,300; 367,298; *UK* 2,072,832; *France* 81/03938; *Italy* 1,138,713.

1.3.4 The 8255 Vehicle-Mount Terminal — LCD or VFD

Note: *The 8255 terminal is available with a liquid crystal display (LCD) or a vacuum fluorescent display (VFD).*

Figure 1.6 The 8255 Vehicle-Mount

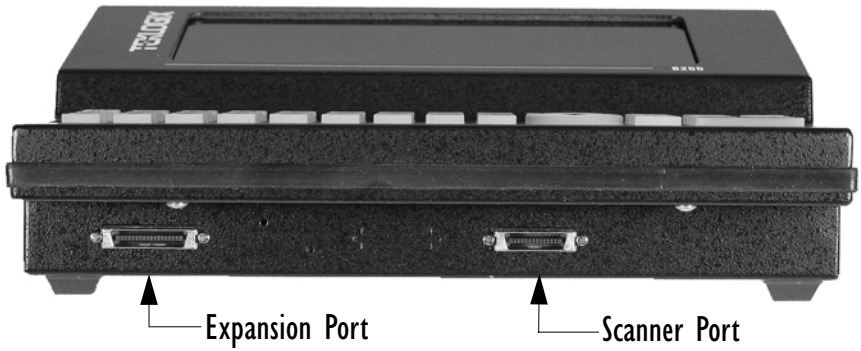

Figure 1.7 8255 Ports

1.3.5 The 8260 Vehicle-Mount Terminal - LCD Only

Figure 1.8 The 8260 Vehicle-Mount

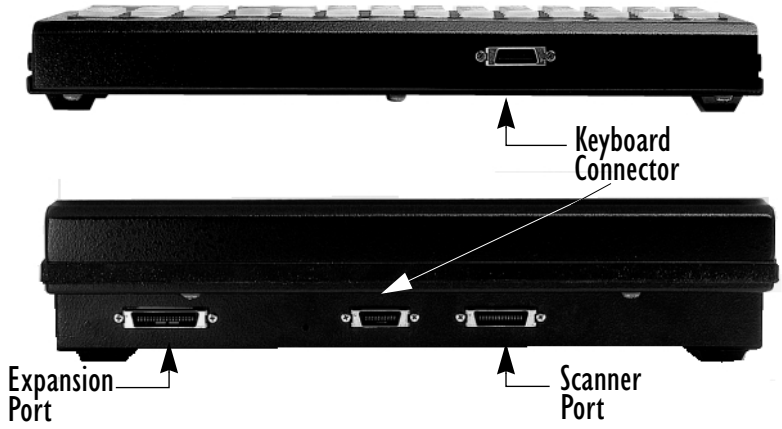

Figure 1.9 8260 Ports

Basic Assembly And Operation 2

2.1 Preparing The 7035 For Operation 17
2.1.1 Connecting The 7035 Whip Antenna 17
2.1.2 The Battery Pack – Removing And Installing 17
2.1.3 Attaching The 7035 Hand-Strap Or The Pistol Grip. 19
2.1.3.1 Attaching The Hand Strap 19
2.1.3.2 Attaching The Pistol Grip. 19
2.2 Installing 8255/8260 Vehicle-Mount Terminals 20
2.2.1 Mounting The 8255 Vehicle-Mount Terminal 20
2.2.2 Using The Cradle And Cradle Mounting Plate 21
2.2.3 Mounting The 8260 Terminal 23
2.2.4 Connecting The 8255/8260 Antenna. 24
2.2.5 Installing The Cables. 24
2.2.6 Installing The Extension Power Cable 25
2.3 Basic Operation Of The Terminals 26
2.3.1 Turning The Terminals On And Off 26
2.3.1.1 7035 Hand-Held 26
2.3.1.2 8255 And 8260 Vehicle-Mounts 27
2.3.2 Resetting Terminals 27
2.3.2.1 Resetting The 7035 27
2.3.2.2 Resetting The 8255 And 8260 27
2.3.3 The Display Menu 28
2.3.3.1 Bypassing Tekterm At Terminal Bootup 28
2.3.3.2 Launching And Exiting The Parameters Menu. 28
2.3.3.3 Launching And Exiting Tekterm 29
2.3.3.4 Launching And Exiting DOS 29
2.3.4 The Keyboard 30
2.3.4.1 The Status Area – 7035 Only 30
2.3.4.2 <ORANGE> And <BLUE> Keys 30

2.3.4.3 The Standard Keys. 31
2.3.4.4 Key Lock Function 34
2.3.4.5 The Function Keys – Softkeys. 36
2.3.4.6 The 7035 Hand-Held – Accessing Function Keys 36
2.3.4.7 The 8255/8260 Vehicle-Mounts – Accessing Function Keys . 37
2.3.4.8 The Macro Keys – Creating Macros 39
2.4 The Indicators 39
2.4.1 LEDs 39
2.4.2 Onscreen Indicators – 7035 Only. 40
2.4.3 Softkeys. 42
2.4.5 The Beeper 42
2.4.5.1 Beeper Volume – <BLUE> <F3> And <F4> 43
2.4.5.2 Beeper Volume – The “Volume” Parameter. 43
2.5 The Display 44
2.5.1 Adjusting The Display Contrast 44
2.5.1.1 Contrast Adjustment – <BLUE> <F1> And <F2> 44
2.5.1.2 Contrast Adjustment Using The “Contrast” Parameter 45
2.5.2 Panning 45
2.6 The Integrated Scanner Option – 7035 Only 46
2.6.1 Warnings 46
2.6.2 Operation Of The Integrated Scanner 46
2.6.3 Scanning Techniques 48
2.7 Infrared (IrDA) Port – 7035 Only. 48
2.8 Maintenance. 48
2.8.1 Cleaning All Terminals 48
2.8.2 7035 – Special Instructions. 49
2.8.3 Maintaining The 7035 Battery 49

2.1 Preparing The 7035 For Operation

Note: *For vehicle-mount installation instructions, refer to "Installing 8255/8260 Vehicle-Mount Terminals" beginning on page 20.*

Preparing the 7035 terminal for operation includes installing the battery pack, and if an external antenna is required, connecting the antenna to the 7035.

Important: ***All battery packs must be charged before use. Refer to "The 7967 Gang Charger" on page 167 for battery charging details.***

2.1.1 Connecting The 7035 Whip Antenna

To begin, if your 7035 has a plastic cap at the top of the unit, it uses an internal antenna – a whip antenna is not required.

If a whip antenna was supplied with the 7035, it should be attached to the top of the unit. Make certain that the antenna is securely attached to the terminal.

Important: ***If you are unsure if the antenna supplied is intended for your terminal, refer to "Antenna Types" on page 170.***

In addition, failure to securely attach the antenna to the terminal can result in poor communication quality.

2.1.2 The Battery Pack – Removing And Installing

The 7035 hand-held terminal operates with a Lithium-Ion battery pack.

Important: ***Before attempting to install, use or charge the battery pack, it is critical that you review and follow the important safety guidelines listed on page 50 and also in the section titled "Lithium-Ion Battery Safety Precautions" on page 161.***

Warning: ***When a battery is removed from the terminal, a backup of the system, application and any work in progress is maintained for up to 10 minutes. A fresh battery must be installed within this 10 minute timeframe. THIS BACKUP WILL NOT FUNCTION UNLESS THE TERMINAL IS TURNED OFF BEFORE THE BATTERY IS REMOVED. Removing the battery while the unit is operating will result in a full reboot.***
Even after the system backup has expired, the date and time are maintained for 100 hours without a battery.

To remove the battery pack:

- Turn the terminal upside down (antenna pointing down).
- Grasp the unit around the keypad area with your forefinger resting on the battery release button.

The battery release button is located at the base of the terminal, just above the 28-pin port.

- Press the button until the battery unlatches.

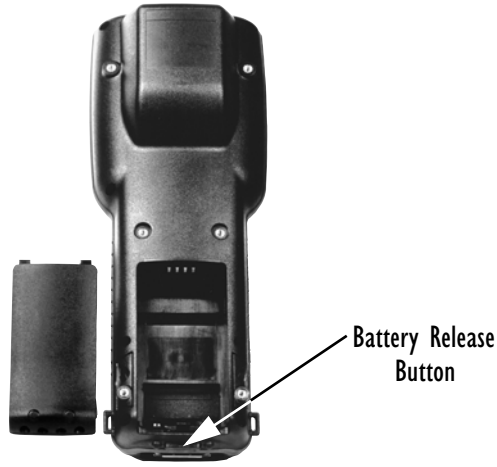

Figure 2.1 Battery Compartment Of The 7035 Terminal

To install the battery pack:

- Insert the battery pack with the textured plastic facing you. Click the battery into place.

2.1.3 Attaching The 7035 Hand-Strap Or The Pistol Grip

Note: *For a list of additional accessories, refer to "Accessories Part Number List" on page 179.*

2.1.3.1 Attaching The Hand Strap

Note: *A Phillips head screwdriver is required.*

Teklogix recommends that the hand strap provided with your terminal **always** be used. However, if your terminal has an internal scanner and you plan to use the pistol grip accessory, a hand strap is not required.

Each end of the hand strap has two holes drilled in it. The holes nearest the outer edges of the hand strap allow the hand strap to be installed more loosely while the holes closer to the centre of the strap provide a tighter fit. The hand strap can be secured either on the left or the right side of the terminal, depending on operator preference.

Two black #4-40 Phillips head screws are provided with the hand strap for attachment. Four threaded inserts are available on the back of the terminal. The hand strap can be attached either to the upper- and lower-most inserts on the left side of the terminal or to the upper- and lower-most inserts on the right side of the terminal. To attach the hand strap, choose on which side of the terminal the hand strap is to be attached and securely fasten the screws into the back of the terminal.

2.1.3.2 Attaching The Pistol Grip

Note: *A Phillips head screwdriver is required.*

The four threaded inserts in the upper part of the terminal casing are used to attach the pistol grip. Four black #4-40 Phillips head screws are provided with this accessory.

Note: *Prior to installation, make sure the trigger mechanism has been securely snapped into the pistol grip body and the trigger operates properly.*

Position the pistol grip so that it fits snugly over the back of the terminal and the holes on the terminal and pistol grip are aligned. Using a Phillips screw driver, securely fasten the pistol grip to the back of the terminal.

2.2 Installing 8255/8260 Vehicle-Mount Terminals

The installation of the vehicle-mount terminal depends on the type of vehicle and the application environment. A typical installation includes:

1. Mounting the terminal.
2. Connecting the antenna.
3. Installing the power extension

Note: *Make certain that the unit is mounted inside the roll cage.*

2.2.1 Mounting The 8255 Vehicle-Mount Terminal

There are two mounting options available:

1. Using the horizontal/vertical mounting cradle. (Refer to Figure 2.2.)
2. Using the cradle (P.N. 18457) and cradle mounting plate (P.N. 18197).

Note: *The bolts used for all installations are SAE 1/4-20.*

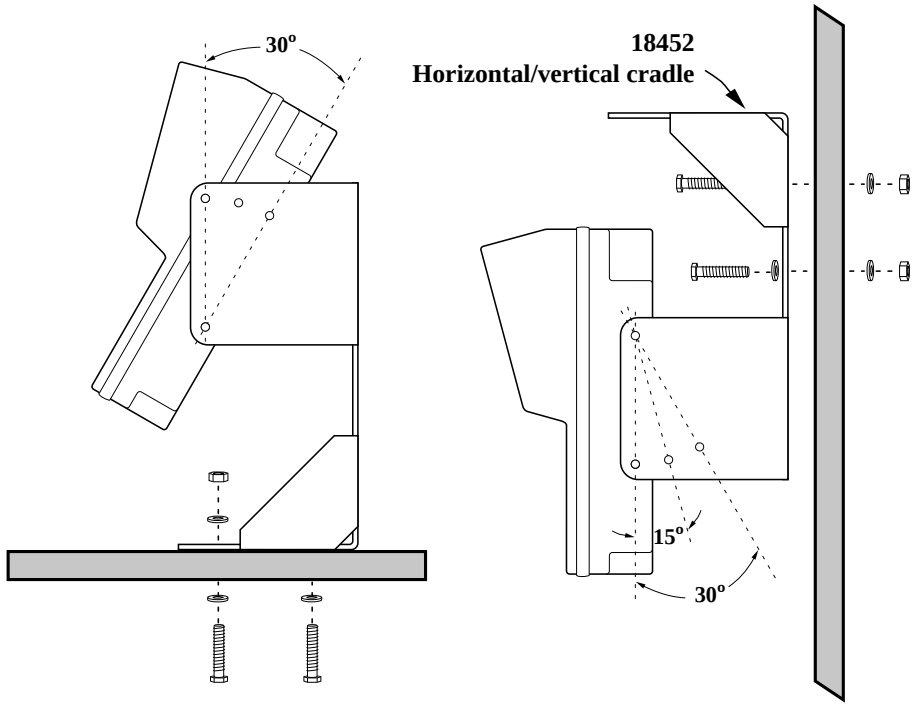

Figure 2.2 The Horizontal/Vertical Mounting Cradle

2.2.2 Using The Cradle And Cradle Mounting Plate

Attaching The Terminal And Cradle

First, the terminal must be attached to the cradle (Figure 2.3). To do this:

- Place the terminal in the cradle so that the display side of the terminal is on the same side as the quick release fasteners. The keyboard side of the terminal should be on the same side as the tabs.
- Match the side screw holes on the terminal with the appropriate pairs of holes on the cradle and screw them together. The choice of holes determines the angle at which the terminal tilts.

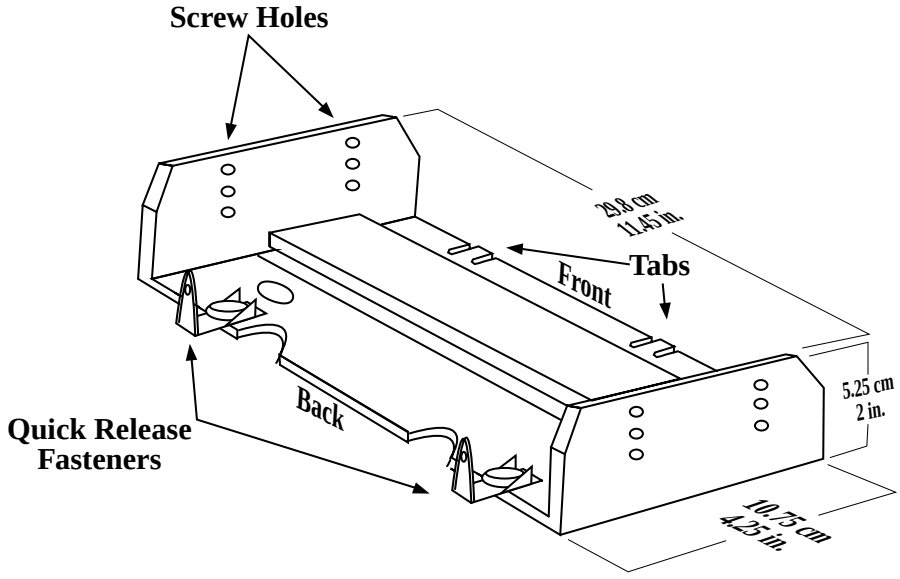

Figure 2.3 The Terminal Cradle (P.N. 18457)

Installing The Cradle Mounting Plate

Next, the cradle mounting plate must be attached to the vehicle. The cradle mounting plate shown in Figure 2.4 holds the terminal and cradle in place.

- Screw the cradle mounting plate onto the vehicle using the four 1/4" holes.

Note: *The bolts used for all installations are SAE 1/4-20.*

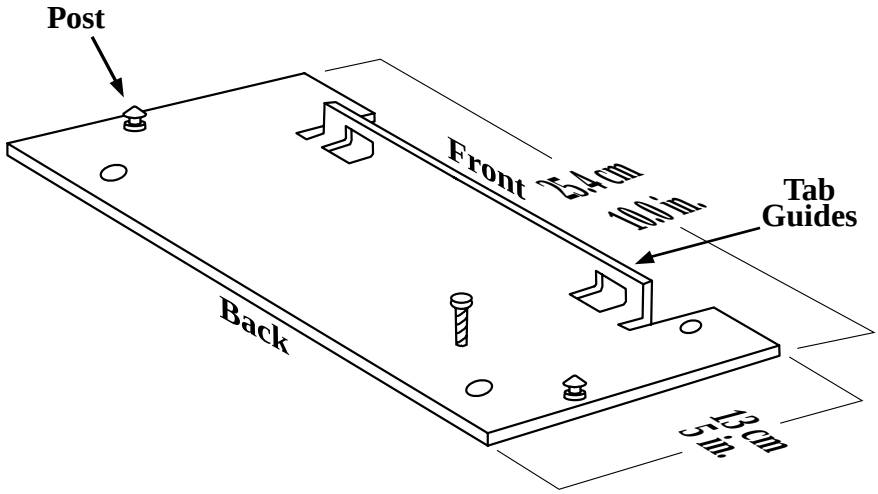

Figure 2.4 The Cradle Mounting Plate (P.N. 18197)

Attaching The Cradle To The Cradle Mounting Plate

Next, the terminal and cradle must be attached to the cradle mounting plate.

- Align the tabs on the rear of the cradle to the tab guides on the mounting plate and push the cradle back and down.
- Slide the fasteners on the front of the cradle until they snap to the posts on the mounting plate.

Warning: ***Never operate the vehicle if the quick release fasteners are not locked.***

2.2.3 Mounting The 8260 Terminal

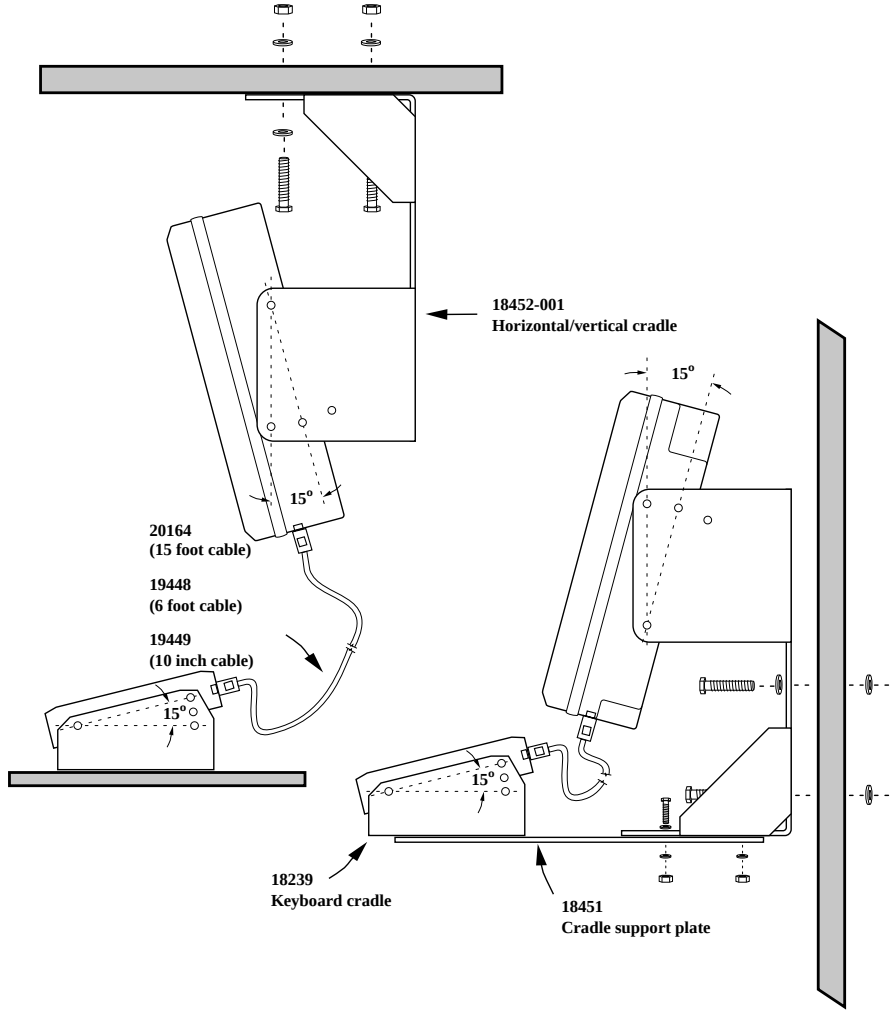

Figure 2.5 8260 Mounting Options

There are three mounting options available. Each possible option is listed below. Figure 2.5 on page 23 provides a visual illustration of the mounting options.

1. The horizontal/vertical mounting cradle (P.N. 18452) and the keyboard cradle (P.N. 18239).
2. The combined mounting option using the horizontal/vertical mounting cradle (P.N. 18452-001), the keyboard cradle (P.N. 18239), and the cradle support plate (P.N. 18451).
3. Using the terminal cradle (P.N. 18198) for the display, the cradle mounting plate (P.N. 18197) and the keyboard cradle (P.N. 18239).

2.2.4 Connecting The 8255/8260 Antenna

Warning: ***Operating the terminal without an antenna may damage the radio.***

The antenna consists of the antenna whip and a magnetic mount with cable.

- For narrow band radios, screw the antenna on in a clockwise direction.
- For spread spectrum radios, screw the antenna on in a counter-clockwise direction.

The antenna works best when placed vertically and away from metal objects that may interfere with the radio signal. The best location for the magnetic mount on a fork lift truck is on the middle of the roof or cab cover, at least 20 centimeters away from the operator.

Warning: ***As a safety precaution, USERS ARE NOT PERMITTED TO CHANGE THE ANTENNA.***

2.2.5 Installing The Cables

Note: *Make sure the cables run inside the roll cage.*

When installing the cables between the terminal and other devices, consider the following:

- Ensure the drilling holes will not damage the vehicle or its wiring.
- Protect cable runs from pinching, overheating and physical damage.
- Protect cables by using grommets when cables pass through metal.
- Prevent cables and connectors from moving and loosening by using plastic straps.
- Keep the cables away from heat sources, grease, battery acid, and other potential hazards.

- Keep the cables away from control pedals and other moving parts that may pull on the cables or interfere with the operation of the vehicle.
- Leave enough slack on the cables so that the terminal can be removed easily for maintenance.

2.2.6 Installing The Extension Power Cable

The terminal has a short power cord and connector. The extension power cable (P.N. 13985) should be connected from the terminal's power cord to a fused power source capable of carrying the additional 3 Amps required by standard terminals or 5 Amps for freezer terminals.

Note: *For vehicles operating on 24 Volts or above, connections must be made as close to the vehicle battery as possible.*

If an unfused power source must be used, install the fuse assembly (P.N. 19440) provided with P.N. 13985. To connect the fuse assembly, push the male connector of the fuse assembly into the female connector at the positive (red) lead of the power cable. Connect the red lead to the positive side of the battery. Connect the black lead to the negative side of the battery.

Warning: ***Do not reverse the polarity or connect to a voltage outside the 10-55 volt range.***

Note: *When installing terminals on vehicles operating on 24 Volts and above, the diode assembly (supplied with the extension power cable 13985) must be used to reduce the AC ripple produced by the SCR traction motor controller on the vehicle. To connect the diode, push the male connector on the diode assembly into the female connector on the positive (red) lead of the power cable. If the fuse assembly is already installed, connect the diode assembly to the fuse assembly as described in the previous sentence. Connect the red wire from the diode assembly to a fused power source on the vehicle.*

It is recommended that all connections be secured with electrical tape or heat shrink to prevent contaminants from degrading the connection.

2.3 Basic Operation Of The Terminals

Important: ***Any differences in operation between the 7035 hand-held and the 8255/8260 vehicle-mount terminals are explicitly indicated.***

The Teklogix 7035, 8255 and 8260 terminals are fully functional personal computers (PCs), compatible with the IBM AT (486) architecture. They normally come pre-loaded with DOS. These terminals are intended to be used in terminal emulation mode for real-time wireless data transaction processing. However, they can also be used stand-alone in batch mode.

The remainder of this manual describes terminal operation as it applies to normal terminal emulation mode, utilizing wireless communication to a host computer.

The operation of these terminals depends on the application software running on the host computer. The terminals' interaction with the application depends on both the terminal operating system and the terminal hardware. This chapter outlines the unique features of the hardware. For more information on the terminal operating system, see *Chapter 6: Setting Parameters*.

2.3.1 Turning The Terminals On And Off

2.3.1.1 7035 Hand-Held

Turning On The 7035

The 7035 does not have a dedicated On/Off button.

To turn the 7035 on:

- Press and hold down the <ENTER/ON> key for at least one second.

Turning Off The 7035

Important: ***Turning the 7035 off does <u>not</u> result in a complete reboot; rather, the terminal enters a power-saving, "suspend" mode (assuming that a value other than 'Disabled' has been assigned to the power-saving parameter, "Power Down" - see page 99). When the terminal is turned on from suspend state, operation resumes within a few seconds. The terminal will emit a few beep sequences while it wakes from suspend state.***

To turn the 7035 off:

- Press the <BLUE> key, and then press the <ENTER/ON> key.

Important: ***If the <BLUE> key is locked "on", the terminal will not turn off. (Look for the word BLUE, displayed in uppercase characters in the status area at the bottom of the screen.) If this key is locked "on", press it again to unlock it, and then press <BLUE> <ENTER/ON> to turn the terminal off.***

2.3.1.2 8255 And 8260 Vehicle-Mounts

Both types of vehicle-mount terminals have on/off switches at the back of the unit.

- Reach around to the back of the terminal toward your right, and press the On/Off switch – I represents "on" and "O" represents off.

2.3.2 Resetting Terminals

Note: *Regardless of which type of terminal you are using, a reset will result in a complete reboot of the unit. When the terminal is reset, it reboots to the Tekterm application.*

2.3.2.1 Resetting The 7035

To reset the 7035:

- Press and hold down the <BLUE> key and the <ENTER/ON> key for a minimum of six seconds.

A reset will result in a complete reboot of the unit. When the terminal is reset, it reboots to the Tekterm application.

2.3.2.2 Resetting The 8255 And 8260

To reset the 8255 or 8260:

- Using the On/Off switch, turn the terminal off and back on again.

2.3.3 The Display Menu

```
01 Display Menu
A   Parameters
B   Emulations
C   DOS Prompt
```

The start up, “Display Menu” is used to access the Parameters menu, the Tekterm application and the DOS prompt.

2.3.3.1 Bypassing Tekterm At Terminal Bootup

Normally, the Tekterm application is launched automatically when the terminal is rebooted. To bypass Tekterm and launch the “Display Menu”:

- As the terminal is rebooting, press the <ESC> key.

If you’re not quick enough with the <ESC> key and Tekterm is launched, press <ALT> and type *x* to exit Tekterm and return to the “Display Menu”.

If you’re using a 7035 hand-held, press the <ORANGE> key, and then press <ALT> and type *x*.

2.3.3.2 Launching And Exiting The Parameters Menu

To launch the “Parameters” menu from the startup “Display” menu:

- **8255/8260:** Type the letter *a*.
- **7035**: Press <ORANGE>, and then type the letter *a*.

At this point, you’ll be asked to enter a password – either a supervisory or Teklogix level password.

Important: ***If you’re using a 7035 and your password consists of <u>numeric</u> rather than alphabetic characters, remember to press the <ORANGE> key to turn Alpha mode off before typing your password. Check the status area at the bottom of the screen to make sure the onscreen indicator “ORANGE” is no longer displayed.***

To exit the “Parameters” menu and return to the “Display menu”

- Press <F2> – the PREVIOUS key – until the “Display Menu” is visible.

2.3.3.3 Launching And Exiting Tekterm

Normally, the Tekterm application – an emulation – is automatically launched when the terminal is turned on. If the "Display Menu" is on your screen:

- **8255/8260**: Type the letter *b* to launch Tekterm.
- **7035**: Press the <ORANGE> key, and then type the letter *b*.

To exit Tekterm and return to the "Display Menu":

- **8255/8260**: Press <ALT> and type the letter *x*.
- **7035**: Press <ORANGE> <ALT>, and type the letter *x*.

2.3.3.4 Launching And Exiting DOS

To launch DOS from the "Display Menu":

- **8255/8260**: Type the letter *c*.
- **7035**: Press the <ORANGE> key, and then type the letter *c*.

At this point, you'll be asked to enter a password – either a supervisory or Teklogix level password.

Important: ***If you're using a 7035 and your password consists of <u>numeric</u> rather than alphabetic characters, remember to press the <ORANGE> key to turn Alpha mode off before typing your password. Check the status area at the bottom of the screen to make sure the onscreen indicator "ORANGE" is no longer displayed.***

To exit DOS and return to the "Display Menu":

- **8255/8260**: Type *start* at the DOS prompt, and press <ENTER>, **and press <ESC> immediately**.
- **7035**: Press the <ORANGE> key before typing *start*, **and press <ESC> immediately**.

To exit DOS and return to the "Emu.lations" screen:

- **8255/8260**: Type *start* at the DOS prompt, and press <ENTER>.
- **7035**: Press the <ORANGE> key before typing *start*.

2.3.4 The Keyboard

Note: *Where a key or key function is not consistent with the PC keyboard, the differences are noted. Refer to Figure 1.1 on page 7 for key locations.*

In addition, any differences in keyboard operation between the 7035 hand-held and the 8255/60 vehicle-mounts are explicitly indicated.

The 7035, 8255 and 8260 terminals are equipped with standard keyboard keys along with two colour keys – an <ORANGE> key and a <BLUE> key – to allow access to additional keys such as the extended function keys and the <CLR> key. Some of the most frequently-used standard keyboard keys along with the keys accessed using the <ORANGE> and <BLUE> keys are described in this section.

2.3.4.1 The Status Area – 7035 Only

The 7035 terminal has a status area at the bottom of the terminal screen that indicates which mode keys are currently active. The key or keys pressed are displayed in lowercase letters at the bottom of the screen. For example, if you press the <CTRL> key, it is displayed as *ctrl* in the status area.

The status area also indicates whether or not the function of a mode key has been locked “on”. Keys that have been locked “on” are displayed in the status area in uppercase letters. For example, if you press the <CTRL> key twice to lock it “on”, it is displayed as *CTRL* in the status area. Refer to “Onscreen Indicators – 7035 Only” on page 40 and 41 for a description of all possible status area messages.

2.3.4.2 <ORANGE> And <BLUE> Keys

The <ORANGE> and <BLUE> keys provide a means of accessing additional keyboard options such as the CLR function or the alpha keys. On 7035 hand-held terminals, the <ORANGE> key is used primarily to access alphabetic characters, and on 8255 and 8260 vehicle-mounts, the <ORANGE> key is used to access function and macro keys. The <BLUE> key is used primarily for terminal control keys such as LCD contrast and beeper volume control.

Important: ***When you press the <ORANGE> key only once, it is locked "on" by default. You need to press the <ORANGE> key a second time to unlock or turn it off. Refer to "Key Lock Function" on page 34 for a complete description of this function.***

KEEP IN MIND that you can change the default key lock function of the <ORANGE> key using the "One-Shot Mode" parameter (see "One-Shot Mode" on page 100).

The functions that are accessed using the <ORANGE> or <BLUE> keys are colour coded in orange or blue print above the standard keys, indicating whether you must first press the <ORANGE> or the <BLUE> key before accessing a function.

As an example, to access the "CLR" function which is printed in *blue* characters above the <DEL> key:

- Press the <BLUE> key and then, press the <DEL> key.

To access the alphabetic characters displayed in *orange* characters above the standard keys on the 7035:

- Press the <ORANGE> key and then, press the appropriate alpha key.

2.3.4.3 The Standard Keys

The <SHIFT> Key

The <SHIFT> key is used to display uppercase letters and to access the punctuation marks displayed on the numeric keys. When this key is pressed, it is only active until the next alphanumeric key is pressed. For example, once you press <SHIFT> and type the letter *q*, the letter is displayed in uppercase and the "*shift*" function turns off.

Note: *On 7035 hand-helds, press the <ORANGE> key to activate Alpha mode, and then press the <SHIFT> key to display uppercase alpha characters. Keep in mind that the <ORANGE> key is locked "on" after being pressed only* ***once****.*

To display all alpha characters in uppercase, lock the <SHIFT> key "on" by pressing it twice. To unlock the <SHIFT> key, press it a third time. For more details about the lock function, refer to "Key Lock Function" on page 34.

The Arrow Keys

The Arrow keys move the cursor around the screen in the direction of the arrow – up, down, left and right. The cursor is the flashing box or underline character that indicates where the next character you type will appear.

Manual Panning Keys (Arrow Keys)

If the content of a screen is too large to fit in the margins of the terminal window, the contents can be “panned” or shifted to display information outside the margins. The 7035 and the 8255 and 8260 terminals allow both *manual* and *automatic* panning. The “Panning” parameter specifies when and how the screen contents should be shifted.

Note: *For details about Auto Panning, refer to “Auto Pan, Left Margin, Right Margin And Bottom Margin” on page 93.*

Manual panning – shifting the contents of the screen using the <BLUE> key in combination with the <LEFT>, <RIGHT>, <UP> and <DOWN> arrow keys – relies on the values set in the “X Increment” and “Y Increment” parameters to determine the number of columns (spaces) and rows (lines) to pan or shift.

To access the “X Increment” and “Y Increment” parameters:

- In the “Parameters” menu, position the cursor on the “System” option and press <F1>.
- Move the cursor down to “Panning” and press <F1>.

Important: ***Only the “X Increment” and “Y Increment” parameters are used for manual panning. The remaining parameters in the Panning menu are used to specify auto panning margins.***

“X Increment” determines the number of spaces the screen pans to the left or right when the <BLUE> key is pressed followed by the <LEFT> or <RIGHT> arrow key.

“Y Increment” determines the number of lines the screen pans up or down when the <BLUE> key is pressed followed by the <UP> or <DOWN> arrow key.

- Type a value in the “X Increment” and “Y Increment” parameters.

To pan the screen contents:

- Press the <BLUE> key followed by the <RIGHT>, <LEFT>, <UP> or <DOWN> arrow key to pan the entire screen of information.

Note that pressing <BLUE> <LEFT> arrow pans the screen to the right, pressing <BLUE> <RIGHT> arrow pans the screen to the left, and so on.

Note: *To more efficiently pan the content of the screen, you may want to lock the <BLUE> key "on" by pressing it twice. You can then press any arrow key in any direction until the necessary information has been brought into view.*

When you have finished panning the information, press the <BLUE> key a third time to unlock or turn it off.

The <DEL/CLR> Key

The <DEL> key (sometimes referred to as destructive backspace) moves the cursor one character to the left, erasing the incorrectly entered key stroke. This key operation is **not** consistent with the DELETE key on a PC keyboard. It is consistent with the PC BACKSPACE key.

The CLR function clears the entire contents of the field in which the cursor resides. To access the CLR function, press the <BLUE> key followed by the <DEL> key. There is no PC keyboard equivalent for this key.

The <CTRL> Key

The <CTRL> key modifies the next key pressed and is application dependent. For example, in a macro field, pressing <CTRL> *l* followed by the <ENTER> key inserts the function of the <ENTER> key into the macro. In TESS and ANSI applications, defined <CTRL> key combinations perform specific actions. <CTRL> key functions for each application are described in the appropriate chapters of this manual.

The <ALT> Key

This key provides access to alternate commands as defined by the application you are using.

The <ESC> Key

While in the “Parameters” menu, pressing the <ESC> key closes the current menu and displays the previous one. In an ANSI session, pressing this key sends an escape character to the host. In a TESS session, the <ESC> key has no effect.

The <TAB> Key

In a TESS application, pressing the <TAB> key moves the cursor into the next field to the right. In an ANSI application, pressing the <TAB> key transmits a “TAB” character to the host.

The <SPACE> Key

Pressing this key inserts a blank space between characters.

The <SCAN> Key – 7035 Only

Pressing the <SCAN> key – the yellow key with the star-burst scan symbol on it – activates the scanner beam. It is situated in the top-centre of the keyboard for easy right- or left-handed access.

2.3.4.4 Key Lock Function

The <SHIFT>, <ALT>, <CTRL>, <ORANGE> and <BLUE> keys have a *lock* function that allows the function of these keys to be locked “on” until you unlock or turn them off.

Locking The <SHIFT>, <ALT>, <CTRL> Or <BLUE> Keys

To lock the function of any of these keys “on”:

- Press the appropriate key **twice**.

Important: ***The <ORANGE> key is the only key that locks “on” when pressed only <u>once</u>.***

KEEP IN MIND however that you can change the default key lock function of the <ORANGE> key using the “One-Shot Mode” parameter (see “One-Shot Mode” on page 100).

On 7035 hand-held terminals, an onscreen message is displayed in *uppercase* letters in the status area at the bottom of the terminal screen to indicate that a key is locked "on". For example, when the <CTRL> key is locked "on", the onscreen message – *CTRL* – is displayed in uppercase letters in the status area. For more information about status area indicators, refer to "Onscreen Indicators – 7035 Only" on page 40.

On 8255 and 8260 vehicle-mount terminals, LEDs are used to indicate the status of a key. When a key is locked "on", the corresponding LED stays on until the key is unlocked. If you've only pressed a key once, the corresponding LED blinks until the key is no longer active.

Unlocking The <SHIFT>, <ALT>, <CTRL> Or <BLUE> Keys

To unlock or turn off any of these keys:

- Press the *locked* key a third time.

On 7035s, the onscreen message indicating the locked key – e.g., *SHIFT* – is cleared from the status area.

On 8255s and 8260s, the corresponding LED turns off.

Locking And Unlocking The <ORANGE> Key

To lock this key "on":

- Press the <ORANGE> key **once**.

To unlock or turn off this key:

- Press the *locked* <ORANGE> key a second time.

2.3.4.5 The Function Keys – Softkeys

The 7035, 8255 and 8260 all offer a total of 36 function keys. The function of each of these keys is defined in the application software. The first four function keys – <F1> to <F4> on a 7035 and the first six on a vehicle-mount – <F1> to <F6> – are referred to as softkeys. They are preprogrammed to perform specific actions in the menus.

You don't need to memorize the table below. Softkey labels are displayed at the bottom of the terminal screen to identify the function of each key.

Function Key	Softkey Functions
<F1>	NEXT – Displays the next sub-menu
<F2>	PREVIOUS – Displays the previous menu.
<F3>	DEFAULT – Restores all parameters to the factory settings – even after <F4> has been pressed to save the changes made to parameters.
<F4>	SAVE – Saves a change to a parameter value.

Table 2.1 Softkeys

2.3.4.6 The 7035 Hand-Held – Accessing Function Keys

The 7035 has 36 function keys, the first 12 of which are directly accessible on the keyboard. The remaining 24 require key combinations.

Accessing Function Keys <F1> To <F12>

Function keys <F1> to <F12> are directly accessible by pressing the appropriate key on the keyboard – that is, a key combination is not required to access these function keys.

Accessing "Ctrl" Function Keys <F13> To <F24>

Accessing <F13> to <F24> requires pressing <CTRL> and one of the function keys, <F1> through <F12>.

To access function key <F13>:

- Press the <CTRL> key followed by <F1>.

To access function key <F14>:

- Press the <CTRL> key followed by <F2>, and so on.

Accessing "Shift" Function Keys <F25> To <F36>

Accessing <F25> to <F36> requires pressing <SHIFT> and one of the function keys, <F1> through <F12>.

To access function key <F25>:

- Press the <SHIFT> key followed by <F1>.

To access function key <F26>:

- Press the <SHIFT> key followed by <F2>, and so on.

2.3.4.7 The 8255/8260 Vehicle-Mounts – Accessing Function Keys

Vehicle-mount terminals have a total of 36 function keys, the first six of which are directly accessible on the keyboard. The remaining 30 require key combinations.

Accessing Function Keys <F1> To <F6>

The first six function keys on vehicle-mounts are directly accessible from the keyboard. That is, they are dedicated function keys; a key combination is not required. <F1> to <F6> are the bright yellow keys located in the upper-left portion of the keyboard.

Accessing Function Keys <F7> To <F12>

You'll find these keys in orange print just above and to the left of the first six alpha keys on the keyboard. The actual alpha key varies depending on the type of keyboard you're using – *QWERTY, ABC* or *AZERTY.* On a *QWERTY* keyboard, <F7> is accessible from the *Q* key, <F8> from the *W* key, and so on. On an *ABC* keyboard, <F7> is accessible from the *A* key, <F8> from the *B* key, and so on. Accessing these function keys requires that you press the <ORANGE> followed by the appropriate alpha key.

For example, on a *QWERTY* keyboard:

- To access <F7>, press the <ORANGE> key, and then type the letter *q*.
- To access <F8>, press the <ORANGE> key, and then type the letter *w*, and so on.

Accessing Function Keys <F13> To <F18>

To access these function keys, you'll need to press the <CTRL> key in combination with one of <F1> through <F6>.

For example:

- To access <F13>, press the <CTRL> key, and then press <F1>.
- To access <F14>, press <CTRL> <F2>, and so on.

Accessing Function Keys <F19> To <F24>

To access <F19> to <F24>, you'll need to press the <CTRL> key, followed by the <ORANGE> key and then, the appropriate alpha key.

For example, on an *ABC* keyboard:

- To access <F19> , press <CTRL> <ORANGE>, and then type the letter *a*.
- To access <F20>, press <CTRL><ORANGE> and type the letter *b*, and so on.

Accessing Function Keys <F25> To <F30>

To access these function keys, you'll need to press the <SHIFT> key in combination with one of <F1> through <F6>.

To access <F25>:

- Press <SHIFT> <F1>

To access <F26>:

- Press <SHIFT> <F2>, and so on.

Accessing Function Keys <F31> To <F36>

Accessing these keys requires that you press the <SHIFT> key in combination with the <ORANGE> key and the appropriate alpha key.

For example, on a *QWERTY* keyboard:

- To access <F31>, press <SHIFT> <ORANGE> and then type the letter *q*.
- To access <F32>, press <SHIFT> <ORANGE> and then type the letter *w*, and so on.

2.3.4.8 The Macro Keys — Creating Macros

Important: ***A step-by-step description of how to program macros keys is detailed in "Global Macros" on page 150.***

7035 hand-held terminals are equipped with four macro keys, and 8255/8260 vehicle-mounts with twelve. These keys can be programmed to insert a text string at the cursor position and can also be programmed to execute the function of the following keys: <ENTER>, <DEL>, <CLR> (<BLUE>-<DEL>), any function key including the <CTRL> and <SHIFT> function keys, and the arrow keys.

A macro has 19 programmable characters (or "positions"). The macro keys can be programmed to replace frequently-used keystrokes, including executable keys. They may also be used to provide characters not normally accessed from the keyboard.

2.4 The Indicators

Teklogix terminals use LEDs (Light Emitting Diode), onscreen messages and beepers as indicators.

2.4.1 LEDs

Transmit And Receive

Two LEDs indicate the transmit and receive status of data. On the 7035, they are located on the left and right of the <SCAN> key. On the vehicle-mounts, the LEDs are located to the left on the keyboard and are labelled *TX* and *RX*

- The amber TX (transmit) LED flashes when the terminal transmits data.
- The green RX (receive) LED flashes momentarily during the boot process. After boot up, it flashes when the terminal receives data. (Note that if a Mobitex WAN radio is installed in your terminal, the Receive LED may occasionally blink even ***without*** a Mobitex network connection because the radio modem sometimes generates a Mobitex packet MPAK on its own,)

Key Shift LEDs – 8255 And 8260 Only

The 8255 and 8260 vehicle-mount terminals are equipped with additional LEDs that indicate whether or not a mode key is locked “on”. Mode keys include – <CTRL>, <ALT>, <SHIFT>, <ORANGE> and <BLUE>. When a key is locked “on”, the corresponding LED stays on solidly. If a key has been activated but is not locked “on”, the corresponding LED blinks.

2.4.2 Onscreen Indicators – 7035 Only

Onscreen indicators appear in the status area at the bottom of the terminal screen to indicate a variety of terminal conditions.

Note: *Only the 7035 hand-held terminal is equipped with a status area. The vehicle-mount terminals use LEDs to indicate various terminal states.*

Onscreen Indicator	Description
shift	A lowercase *shift* message indicates that the <SHIFT> key was pressed once. The next numeric key from 0 to 9 that is pressed displays the punctuation mark associated with that key. If both the <SHIFT> and <ORANGE> keys are pressed, the next letter typed appears in uppercase type. Subsequent alpha characters are presented in lowercase type.
SHIFT	An uppercase *SHIFT* message indicates that the <SHIFT> key was pressed twice to lock the key function “on”. Any numeric key from 0 to 9 that is pressed produces the punctuation mark associated with that numeric key until the <SHIFT> key is unlocked or turned “off” by pressing it a third time. If the locked <SHIFT> key is used in conjunction with the <ORANGE> key, all subsequent letters typed appear in uppercase until the <SHIFT> key is unlocked by pressing it a third time.
ctrl	A lowercase *ctrl* message indicates that the <CTRL> key was pressed once. The next alphanumeric key pressed generates an ASCII control character. Subsequent alphanumeric keys are presented as they appear on the keyboard.
CTRL	An uppercase *CTRL* message indicates that the <CTRL> key was pressed twice to lock the key function “on”. All alphanumeric keys pressed generate ASCII control characters until the <CTRL> key is pressed a third time to unlock it.

blue	A lowercase *blue* message indicates that the <BLUE> key was pressed once; it remains active only until the next key is pressed. Any keyboard option coded in blue typeface on the terminal plastic becomes available. (***Note:*** The "One-Shot Mode" parameter (see page 100) can be used to alter the behaviour of the <BLUE> key so that it locks "on" after being pressed **only once**.)
BLUE	An uppercase *BLUE* message indicates that the <BLUE> key was pressed twice to lock this key function "on". Keyboard options coded in blue typeface are available until the <BLUE> key is unlocked – pressed a third time. (***Note***: The "One-Shot Mode" parameter (see page 100) can be used to alter the behaviour of the <BLUE> key so that it locks "on" after being pressed **only once**.)
ORANGE	An uppercase *ORANGE* message indicates that the <ORANGE> key was pressed **once** to lock it "on". The alpha characters printed in orange typeface on the terminal plastic become available. Because it is assumed that the operator will want to enter a string of alpha characters quickly, this is the only key that is locked "on" by default after being pressed **only once**. **KEEP IN MIND** that you can change the default key lock function of the <ORANGE> key using the "One-Shot Mode" parameter (see page 100).
orange	A lowercase *orange* message indicates that the <ORANGE> key was pressed once; it is active only until the next key is pressed. The alpha characters printed in orange typeface on the terminal plastic become available. (Note that the "One-Shot Mode" parameter (see page 100) can be used to alter the behaviour of the <ORANGE> key so that it locks "on" after being pressed only once.)
Battery Gauge	This horizontal gauge indicates the charge level of the battery.
link	A lowercase *link* message indicates that a radio link has been established but the link is currently in power-down mode, a mode that lowers the consumption of battery power. Note that the absence of a link indicator message (either uppercase or lowercase) indicates that a radio link has ***not*** been established.
LINK	An uppercase *LINK* message indicates that the radio link is operational. Note that the absence of a link indicator message (either uppercase or lowercase) indicates that a radio link has ***not*** been established.

Table 2.2 7035 Onscreen Indicators

2.4.3 Softkeys

Softkeys are function keys that are programmed to execute specific actions when pressed. Softkey labels are displayed on the terminal screens to identify the function of the softkeys. Table 2.1 on page 36 lists the functions of these softkeys.

2.4.4 The Battery Gauge (7035 Only)

A horizontal bar graph, referred to as a battery gauge, is displayed in the status area of the 7035 terminal screen. It keeps track of the percentage of remaining battery power capacity – 0 to 100%, resolution 10% of nominal. The number on the right-hand side of the bar graph indicates the maximum capacity of the battery (in milliampere hours).

When the battery capacity is low, the battery gauge blinks and the terminal beeps.

Battery life is typically 8 hours minimum. Fast charge time for a Lithium-Ion battery is generally 2.5 hours. Refer to “The 7967 Gang Charger” on page 167 for battery charging details.

2.4.5 The Beeper

The terminal beeper sounds under a variety of conditions. Some examples include: a key is pressed, a keyboard character is rejected, the terminal is unlocked, bar code input is accepted or rejected, or an operator’s entry does not match in a match field. The beeper also emulates the function of the “PC speaker” when running DOS applications.

There are two ways to adjust the beeper volume – by pressing the <BLUE> key in combination with <F3> and <F4> or by assigning a value in the “Volume” parameter. Both are described in the sections directly following.

Note: *For instructions on setting beeper duration and frequency, refer to the section titled “Sound” on page 154.*

2.4.5.1 Beeper Volume – <BLUE> <F3> And <F4>

Important: ***When you adjust the beeper volume using the <BLUE> <F3> and <F4> key combination, the new setting is not saved to memory. If the terminal is shut off and powered up again, the volume adjustment is lost.***

When you adjust the volume using the "Volume" parameter, the change is saved to memory.

The beeper volume can be adjusted using the <BLUE> key in combination with function keys <F3> and <F4>.

To increase the beeper volume:

- Press the <BLUE> key and then, press the <F3> key. Repeat this key combination until the volume is sufficient for your needs. ***To work more efficiently with these keys, refer to the note below.***

To decrease the beeper volume:

- Press the <BLUE> key and then, press the <F4> key. Repeat this key combination until the volume is low enough for your needs. ***To work more efficiently with these keys, refer to the note below.***

Note: *To more efficiently adjust the beeper volume, lock the <BLUE> key "on" by pressing it twice. You can then press the <F3> or <F4> function keys until the beeper volume suits your needs.*

When you have satisfactorily adjusted the beeper volume, press the <BLUE> key a third time to unlock or turn it off.

2.4.5.2 Beeper Volume – The "Volume" Parameter

Important: ***When you adjust the volume using this parameter, the change is saved to memory.***

To access the "Volume" parameter:

- In the "Parameters" menu, position the cursor on the "System" option, and press <F1>.
- Position the cursor on the "Volume" parameter, and enter a value from 0 to 15. The higher the value, the louder the volume.
- Press <F4> to save the change.

2.5 The Display

Terminals with liquid crystal displays (LCDs) are equipped with backlighting to improve character visibility in low light conditions. The 7035 and 8260 terminals have LCDs as a standard feature. The 8255 can be ordered with a vacuum fluorescent display (VFD) or a LCD. If the ambient light is low, the backlight will turn on after a key is pressed, after a scanner decode, or after data is received from the host. The backlight will remain on for a configurable duration. Refer to "Backlight" on page 94 for details about specifying how long the backlight will remain on.

2.5.1 Adjusting The Display Contrast

Note: *Contrast can only be adjusted on terminals with liquid crystal displays.*

There are two ways to adjust the contrast – by pressing the <BLUE> key in combination with <F1> and <F2> or by assigning a contrast value at the "Contrast" parameter.

2.5.1.1 Contrast Adjustment – <BLUE> <F1> And <F2>

The LCD (liquid crystal display) contrast is adjustable using the <BLUE> key and function keys <F1> and <F2>.

Important: ***When you adjust the screen contrast using the <BLUE> <F1> and <F2> key combination, the new setting is not saved to memory. If the terminal is shut off and powered up again, the contrast adjustment is lost.***

If you adjust the contrast using the "Contrast" parameter, the change is saved to memory.

To darken the display:

- Press the <BLUE> key, and then press <F1>. Repeat this key combination until the contrast suits your needs. ***To work more efficiently with these keys, refer to the note below.***

To lighten the display:

- Press the <BLUE> key, and then press <F2>. Repeat this key combination until the contrast suits your needs. ***To work more efficiently with these keys, refer to the note below.***

Note: *To more efficiently adjust the display contrast, lock the <BLUE> key "on" by pressing it twice. You can then press the <F1> and <F2> function keys until you can easily read the contents of the terminal screen.*

When you have satisfactorily adjusted the contrast, press the <BLUE> key a third time to unlock or turn it off.

2.5.1.2 Contrast Adjustment Using The "Contrast" Parameter

To access the "Contrast" parameter:

- In the "Parameters" menu, position the cursor on the "System" option, and press <F1>.
- Position the cursor on the "Contrast" parameter, and enter a value from -10 to 10. The greater the value assigned, the darker the screen contrast – that is, entering a value of 63 results in a very dark screen.

2.5.2 Panning

The 7035, 8255 and 8260 terminals support *autopanning* as a default mode. The screen will pan as necessary to ensure the current cursor position is always visible.

Note: *Refer to "Auto Pan, Left Margin, Right Margin And Bottom Margin" on page 93 for a detailed description of setting parameters for autopanning.*

The terminals also support *manual* panning. Refer to "Manual Panning Keys (Arrow Keys)" on page 32 for a description of manual panning.

2.6 The Integrated Scanner Option – 7035 Only

2.6.1 Warnings

For your own safety, it is critical that you comply with the following warnings:

1. ***Do not look into the laser beam.***
2. ***CAUTION – Using controls or adjustments, or performing procedures other than those specified herein may result in hazardous radiation exposure.***
3. ***CAUTION – The use of optical instruments with this product will increase eye hazard.***
4. ***This product contains a laser scanner that emits less than 1.0 mW average radiant power at a wavelength of 650 or 680 nm. This product complies with 21 CFR 1040.10, 1040.11 and DIN EN 60825: July 1993, and is classified as a Class 2 laser product.***

2.6.2 Operation Of The Integrated Scanner

- Turn the terminal on.Wait until the unit has booted to Tekterm or a DOS prompt.
- Test the scanner by pointing it at a light coloured surface and pressing the scan key or the pistol grip trigger. The scanning beam should be energized and the warning indicator (shown in Figure 2.6) should be displayed.

Important: ***If an aiming dot is available on the installed scanner, the dot will be enabled for a configurable time period, after which normal scanning begins. Refer to "Dot Time" on page 104 for details.***

Double-clicking the trigger will override the aiming delay and initiate an immediate scan. Note that the aiming dot is standard on long-range internal scanners.

- Aim at the bar code and press the scan key or the trigger. A scan beam and a warning indicator appear until a successful decode is achieved or two seconds have elapsed. For terminals using external scanners, the warning message can be turned off by setting the "Scan Indic" parameter to "N". Refer to "Scan Indic – 7035 Only" on page 104 for details.

Note: *7035 terminals with **internal** scanners always display this warning indicator, even if the "Scan Indic" parameter is set to "N".*

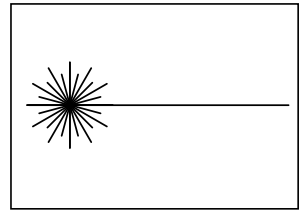

Figure 2.6 7035 Scanner Warning Indication

Successful Decode

If the scanner has successfully read the bar code:

- The terminal beeps.
- The warning indicator disappears.

Troubleshooting

If the scanner is not working, investigate the following:

- Is the terminal on?
- Check that the bar code symbology being scanned is enabled for the terminal you are using. Check any other parameters that affect the scanning procedure or the bar code.
- Check the bar code to make sure it is not damaged. Try scanning a different bar code to verify that the problem is not with the bar code.
- Check that the bar code is within the proper range (see page 196).
- Does the terminal display the warning without scanning? This suggests a hardware problem in the 7035.

The terminal can be configured to enable a function (such as <ENTER>) by pressing the trigger twice within a time period which is measured in milliseconds. See "Click Time" on page 103 for more details. This function is independent of the aiming dot override described earlier in this section, under "Operation Of The Integrated Scanner" on page 46 and only applies after a successful scan.

2.6.3 Scanning Techniques

The Scanner Angle

- Hold the scanner at an angle. Do not hold it perpendicular to the bar code.

Do *not* hold the scanner directly over the bar code. In this position, light can reflect back into the scanner's exit window and prevent a successful decode.

Scan Symbol Variations

- Scan the entire symbol. The scan beam must cross every bar and space on the bar code, including the margins on either end of the symbol.
- Hold the scanner farther away for larger bar codes.
- Hold the scanner closer for bar codes with bars that are close together.

2.7 Infrared (IrDA) Port – 7035 Only

The IrDA port is the small red window at the top of the 7035. This port transmits an infrared signal to:

- A personal computer with an IrDA serial adaptor.
- A printer equipped with an IrDA adaptor.
- Any other IrDA compatible device.

Important: ***The IrDA port is connected to the COM1 serial port UART. A serial peripheral connected to COM1 cannot be used while the IrDA port is active.***

2.8 Maintenance

This section describes the measures that should be added to your equipment maintenance routine.

2.8.1 Cleaning All Terminals

Terminals can be cleaned with mild detergent and water. Ink marks on the keyboard can be removed using a cotton ball moistened with isopropyl alcohol.

Warning: ***Do not immerse the unit in water. Never use strong cleansers.***

2.8.2 7035 – Special Instructions

- The 7035 terminal has a plastic case that is susceptible to certain chemicals. It is partially soluble in aromatic or chlorinated hydrocarbons, and slowly decomposes in strong alkaline solutions. Avoid these solvents. Do not use Loctite brand or other adhesives to secure screws used to attach accessories to the case of the 7035 since the adhesive may damage the plastic (unless the adhesives are specifically formulated for plastics).
- The 7035 scanner, IrDA port and display window should be cleaned with a mild detergent and water, as required. Never apply cleaners directly on the terminal – use a cloth dampened with a mild detergent.

Warning: ***To avoid scratching the display and scan windows, do not use abrasive cleansers.***

2.8.3 Maintaining The 7035 Battery

Important: ***"Lithium-Ion Battery Safety Precautions" on page 161 outlines additional safety precautions. For detailed battery specifications, refer to "Lithium-Ion Battery Pack (7035 Only)" on page 199.***

7035 terminals use Lithium-Ion batteries that do not require conditioning. Each battery pack tracks its own capacity. A horizontal bar graph, referred to as a battery gauge, is displayed in the status area of the terminal screen. It keeps track of the percentage of remaining battery power capacity – 0 to 100%, resolution 10% of nominal. The operator is notified when the battery capacity is low.

Battery life is typically 8 hours minimum. Fast charge time for a Lithium-Ion battery is generally 2.5 hours. Refer to "The 7967 Gang Charger" on page 167 for battery charging details.

Warning: ***BATTERIES ARE CONSIDERED HAZARDOUS WASTE and must be returned to Teklogix for proper disposal. All used batteries must be forwarded to one of the following Teklogix offices:***

Teklogix Inc.
2100 Meadowvale Blvd.
Mississauga, Ontario
L5N 7J9
Canada

Teklogix Corp.
1810 Airport Exchange Blvd.
Suite 500
Erlanger, Kentucky
USA 41018

Teklogix S.A.
Parc Club Du Golf-Bat 1.
13856 Aix-En-Provence
Cedex 3; France

DO NOT DISPOSE OF IN FIRE, mix with other battery types, charge above specified rate, connect improperly, or short circuit the battery. Any of these actions can result in overheating, explosion or leakage of cell contents.

DO NOT INCINERATE or subject battery cells to temperatures in excess of 100°C (212°F). Such treatment can vaporize the liquid electrolyte causing cell rupture. Incineration may result in harmful emissions or explosion.

DO NOT charge, use or store batteries below -30º C (-22˚ F).

Batteries must be handled in accordance with all applicable state and federal laws and regulations.

TEKTERM 3

3.1 Introduction 53
3.2 Launching Tekterm 53
3.3 Working With Application Session Windows 54
3.4 Radio Statistics Screens 54
3.4.1 Viewing A Radio Statistics Screen 54
3.4.2 802.11 Radio Statistics Screen 55
3.4.3 TRX7370 NB & 802.11 SS Radio Statistics Screen 56
3.4.4 TRX7460 Mobitex WAN Radio Statistics Screen 57
3.5 Resetting Radio Statistics 60
3.6 Exiting Tekterm 60

3.1 Introduction

Tekterm is a Teklogix DOS application resident on the 7035, 8255 and 8260 terminals. It provides real-time terminal emulations that are compatible with Teklogix RF/DC systems.

The Tekterm application allows the terminal operator to run up to four TESS and/or ANSI sessions. This application accepts input from the terminal keyboard or from a serial device such as a scanner and provides output to a serial device such as a printer.

3.2 Launching Tekterm

Note: *Normally, the Tekterm application is automatically launched when the terminal is turned on*

If Tekterm is not already running on your terminal, you can launch it from the start-up "Display Menu".

```
01 Display Menu
A   Parameters
B   Emulations
C   DOS Prompt
```

Tekterm is launched through the "Emulations" menu. To launch Tekterm:

- **8255/8260**: Type the letter *b*.
- **7035**: Press the <ORANGE> key before typing the letter *b*.

3.3 Working With Application Session Windows

The window area in Tekterm contains the active application. It is possible to have one or more application sessions – usually TESS or ANSI – running at the same time. A TESS or ANSI session window occupies the entire terminal screen with other sessions present in the background. Only one application session window can be active at a time.

To cycle through the application session windows:

- Press <ALT> <F6>.

Each time this key combination is pressed, the next session window becomes active.

3.4 Radio Statistics Screens

A radio statistics screen is automatically created when TekTerm is started and contains appropriate statistics for the installed radio. Depending on the type of radio installed in your terminal, the radios statistics screen may vary.

3.4.1 Viewing A Radio Statistics Screen

As described in the previous section, "Working With Application Session Windows", if you are working with multiple sessions, pressing <ALT> <F6> cycles from session to session. The radio statistics screen is always treated as the first session in your terminal. If you’re running only one application session, pressing <ALT> <F6> toggles back and forth between the application session and the radio statistics screen.

If you are running multiple sessions, pressing <ALT> <F6> cycles from session to session; when you reach the last session you created, pressing <ALT> <F6> displays the radio statistics screen. If you press <ALT> <F6> at the radio statistics screen, the first application session becomes active once again.

3.4.2 802.11 Radio Statistics Screen

```
Statistics
CQ          100
inpkts      1464
outpkts     62
inbyte      217590
outbyte     5204
inerrs      62
outerrs     1
droppkt     1
```

The statistics represented in the sample screen above are defined as follows:

- CQ communication quality
- inpkts total number of received packets
- outpkts total number of sent packets
- inbyte total number of received bytes
- outbyte total number of sent bytes
- inerrs total number of received packets with errors
- outerrs total number of packet send errors
- droppkt total number of dropped packets

3.4.3 TRX7370 NB & 802.11 SS Radio Statistics Screen

```
Statistics Connection
cq 35   ch 20   sc  3
xm      17 xr      1
xi       4 xe      0
rm      21 ra      3
rp     106 pt    253
```

The statistics represented in the sample screen above are defined as follows:

- cq communication quality
- ch operating channel
- sc scan state - indicates the current channel search state
- xm total number of transmitted messages
- xr total number of retransmissions
- xi total number of transmitted initialize messages
- xe total number of transmit failures (transmission late for response window)
- rm total number of received messages
- ra total number of received radio link aborts
- rp total number of received polls
- pt total number of poll timeouts

3.4.4 TRX7460 Mobitex WAN Radio Statistics Screen

```
Statistics
Mobitex Net C4D7
MAN   15100821
State LIVE/NO_TRANSFER (0:17)
Chan  Ar Bs  Rssi(dBm)
     41 31   -58
3904         -96
        Rx   Tx
mpak   540  540
ok     865  403
disc     0    0
rejt     0    0
rack     0    0
```

Mobitex Net

Example: `Mobitex Net C4D7`

The value indicated at the top of the radio statistics screen is the network identifier of the Mobitex network for which the radio is configured. Possible values are:

3B48	MODATA Czech Republic
4321	Teklogix Mississauga private
4BCC	Mobicom Turkey
4BCC	Massinfo Indonesia
A2F7	RAM UK
A2F7	United Wireless Australia
B433	BellSouth Wireless Data US
C4D7	Cantel Canada
C4D7	SMTD Singapore
C4D7	Telcel Venezuela
EB90	RAM Netherlands
EB90	RAM Belgium
EB90	Telenor Norway

MAN

Example: MAN 15100821

This number represents the “Mobitex Address Number” of the mobitex radio.

State

The values assigned here indicate the state of communication as follows:

Example: State LIVE/NO_TRANSFER (0:17)

LIVE/	communication between terminal and Mobitex network is allowed
DIE/	terminal is not allowed to communicate with the Mobitex network; contact the network operator
/OK	communication between terminal and controller is OK
/NO_TRANSFER	Teklogix Controller is not available (e.g. Controller is down, X.25 connection to Controller is interrupted); contact person responsible for the Controller if the problem persists
/CONGEST	the Mobitex network is congested; contact the network operator if the problem persists
/ERROR	technical error in the Mobitex network; contact the network operator if the problem persists
/ILLEGAL	configuration problem; verify the configuration of the Terminal first (Controller MAN), if Terminal seems properly configured contact the network operator
(minutes:seconds)	This element is present only if element b is not /OK; it indicates the remaining time until the terminal is /OK to communicate again.

Chan Ar Bs Rssi (dBm)

This string lists the base stations that the terminal can receive currently along with their signal strength; the first base station in the list is always the current base. (Keep in mind that this entry may be blank if the terminal has no current base station.)

The current base is always identified by area and base numbers. Depending on the Mobitex network configuration (frame mode or continuous mode), all other bases are identified by their area and base numbers or by a channel number.

```
Example: Chan  Ar  Bs  Rssi(dBm)
```

Chan — Channel number – base transmit, mobile receive – of a particular base station; the channel number is related to the actual frequency as follows:

- 400 MHz networks: frequency = 380 MHz + channel number * 0.0125 MHz
- 900 MHz networks: frequency = 890 MHz + channel number * 0.0125 MHz

Ar — Area number. This value is used by network operators to help identify base stations. A group of base stations share one area number.

Bs — Base station. This value identifies a unique base station in a network.

Rssi (dBm) — Received signal strength represented in dBm.

Receive (Rx) And Transmit (Tx)

The values that appear below “Rx” and “Tx” indicate the number bytes received and transmitted in the data portion of an Mobitex packet (MPAK). This is an approximation of the number of bytes for which the user will be charged by the Mobitex network operator.

Other Communication Indicators

Transmit LED — The amber Transmit LED to the left of the scan button blinks when a Mobitex packet (MPAK) is successfully transmitted over the radio link – that is, the Mobitex base station has acknowledged the packet.

Receive LED — The green Receive LED to the right blinks when a Mobitex packet (MPAK) is received. (Note that the Receive LED may occasionally blink even ***without*** a Mobitex network connection because the radio modem sometimes generates an MPAK on its own.

Link Indicator — The “Link” indicator at the bottom-right corner of the display has three states:

1. Blank – The link onscreen message does not appear. The radio is outside the Mobitex network coverage area.
2. Link (lowercase) – The radio is in the Mobitex network coverage area but the Teklogix controller could not be reached as yet; this may indicate problems with the X.25 link to the controller, or there may be problems with the controller itself (e.g., software malfunction).
3. LINK (uppercase) – The radio is in the Mobitex network coverage area and the link to the Teklogix controller is operating.

3.5 Resetting Radio Statistics

To reset the radio statistics to 0 (zero):

- **8255/8260**: Type *z*.
- **7035**: Press <ORANGE>, and type *z*.

3.6 Exiting Tekterm

To exit Tekterm:

- **8255/8260**: Press <ALT> and type *x*.
- **7035**: Press <ALT><ORANGE> *x*.

When you exit Tekterm, the “Display Menu” described in “Launching Tekterm” on page 53 appears on the terminal screen.

TESS OPERATIONS 4

4.1 Configuration 63
4.2 Working With Multiple Sessions 63
4.3 The Field Types. 64
4.4 Data Entry 64
4.4.1 TESS Edit Modes And Cursor Movement. 65
4.4.2 <CLR> Key Behaviour In TESS. 66
4.4.3 <DEL> Key Behaviour In TESS. 67
4.5 Lock Messages 69
4.6 Control Commands. 69

TESS (Teklogix Screen Subsystem) is the normal operating mode of Teklogix terminals. Teklogix protocol emulation software resident on network controllers or a Teklogix Software Development Kit (SDK) installed in the host converts host screens to TESS commands. The 9140 Wireless Gateway and the 9150 Access Point are also equipped with protocol emulation software.

Note: *If the message "RESET: Press Enter" flashes at the bottom of the TESS screen when you turn on the terminal, press the <ENTER> key once.*

4.1 Configuration

Note: *Each TESS session must have a unique name assigned to it. Refer to "Applications" on page 115 for more details.*

The process of renaming an existing TESS session and adding a new session is described in the section titled, "Applications" on page 115.

A unique terminal number must be assigned in the "Terminal #" parameter for **each** TESS session. Refer to "Terminal #" in the section titled "TESS Settings" on page 126 for details.

4.2 Working With Multiple Sessions

When Tekterm is launched, the first configured session will appear in the screen area. To display the next session in Tekterm when multiple sessions are running:

- Press <ALT> <F6>.

Each time this key combination is pressed, the next session window becomes active.

4.3 The Field Types

Fixed Field – displays information that cannot be changed from the keyboard.

Entry Field – allows the operator to enter data. This type of field is usually shown as: "……."

Match Field – the host computer loads data in the format of the expected entry. If the entered data does not match the expected format, the terminal emits a long beep.

Auto-tab Field – automatically moves the cursor to the next field when the current field is filled.

Bar code only Field – is filled with data from a bar code reader. Keyboard entries are not accepted in this type of field.

Serial I/O Field – is filled with data coming from a serial port. Keyboard input is not accepted in this type of field.

4.4 Data Entry

The terminal accepts data until the operator presses a key that sends a transmission to the host computer. The following actions cause the terminal to transmit:

- Pressing a function key or the <ENTER> key (which is considered to be <F0>) causes the terminal to transmit.
- Completing data entry into a "transmit on entry" field also causes the terminal to transmit.

There are several ways to configure the terminal to complete a data field:

- Pressing <ENTER> after entering data.
- Pressing a function key after entering data.
- Pressing an arrow key after entering data.
- Filling an auto-tab field.

4.4.1 TESS Edit Modes And Cursor Movement

The TESS editing modes and cursor movements in each type of mode are described in Table 4.1.

Field mode	Press <CTRL> *f* to enter *field* mode. In this mode, once data entry into a field has been completed, the entry cannot be changed without retyping the entire field. In field mode, the <RIGHT> and <LEFT> arrow keys do not perform any functions. Pressing the <UP> or <DOWN> arrow key completes the entry field and then, moves the cursor to the previous or next field.
Fcursor mode	Press <CTRL> *u* to enter *fcursor* mode. In this mode, once data entry into a field has been completed, the entry cannot be changed without retyping the entire field. In fcursor mode, the <UP>, <DOWN>, <LEFT> and <RIGHT> arrow keys move the cursor between fields.
Insert mode	Press <CTRL> *i* to enter *insert* mode. In this mode, data can be entered between two characters that have been previously entered. In insert mode, the <RIGHT> and <LEFT> arrow keys move the cursor right and left within a field. The <UP> and <DOWN> arrow keys complete the entry field and move the cursor to the previous or next field.
Replace mode	Press <CTRL> *r* to enter *replace* mode. In this mode, data can be entered over previously entered characters. In replace mode, the <RIGHT> and <LEFT> arrow keys move the cursor to the right and left within a field. The <UP> and <DOWN> arrow keys complete the entry field and move the cursor to the previous or next field.

Table 4.1 Edit Modes

Note: *When the "Enter on Arr" parameter is disabled (set to "N"), the <UP> and <DOWN> arrow keys do not complete an entry field. See page 136 for details about this parameter.*

4.4.2 <CLR> Key Behaviour In TESS

Field mode	• In a left justified field, the <CLR> key erases all characters in the field and places the cursor in the left most position of that field. • In a right justified field, the <CLR> key erases all characters in the field and places the cursor in the right most position of that field. • If the <CLR> key is used to clear data in a field that has been pre-filled by the host application, the field is flagged as modified and the updated information is sent to the host in the next response message.
Replace mode	• In both left and right justified fields, the <CLR> key erases characters beginning from the current cursor position to the end of the field. The cursor remains in the same position in the field. • If the <CLR> key is pressed while cursor is in the right most position in the field, the terminal emits a keyboard error beep. • If the <CLR> key is used to clear data in a field that has been pre-filled by the host application, the field is flagged as modified and the updated information is sent to the host in the next response message.
Insert mode	• In both left and right justified fields, the <CLR> key erases the characters from one character position to right of the cursor to the end of the field. • If the <CLR> key is pressed while cursor is in the right most position in the field, the terminal emits a keyboard error beep. • If the <CLR> key is used to clear data in a field that has been pre-filled by the host application, the field is flagged as modified and the updated information is sent to the host in the next response message.
Fcursor mode	• Refer to “Field Mode” at the beginning of this table. The <CLR> key operates in the same manner in “Fcursor mode” as it does in “Field mode”.

4.4.3 <DEL> Key Behaviour In TESS

Field mode	• In a left justified field, the <DEL> key erases the character directly to the left of the cursor and then moves the cursor on position to the left. When the last character in the field is deleted, the field displays the value that it contained before it was modified, and the field is opened. • In a right justified field, the <DEL> key erases the character on which the cursor is positioned and shifts the remaining characters to the right by one position. When the last character in the field is deleted, the field displays the value that it contained before it was modified, and the field is opened. • If the <DEL> key is pressed when the field is empty, the terminal emits a keyboard error beep. • The <DEL> key does not delete data pre-filled by the host application. • If the <DEL> key is pressed in a field that has not been modified, the terminal emits a keyboard error beep. • If data is entered into a field, and it is then deleted before the field is completed, the field remains unmodified when the cursor leaves the field or when the screen is transmitted.
Replace mode	• In a left justified field, the <DEL> key erases the character on which the cursor is positioned unless it is one position to the right of the last character in the string; in this case, the <DEL> key erases the character to the left of the cursor. • In a right justified field, the <DEL> key erases the character on which the cursor is positioned. The remaining characters are then shifted to the left of the cursor, and the cursor is shifted to the right by one position. • If the <DEL> key is pressed while the cursor is in the right-most character position of the field, the cursor does not shift to the left when that character is erased; it remains in the right most position in the field. • When the last character in a field is erased, the field remains empty – that is, any pre-filled data is not displayed. Pressing the <DEL> key in the empty field results in a keyboard error beep. • The <DEL> key can delete data pre-filled by the host application. • If data is entered in a field and is then deleted before the field is completed, the field remains unmodified when the cursor leaves the field or when the screen is transmitted.

Insert mode	• In a left justified field, the <DEL> function erases the character on which the cursor is positioned, unless it is at the right end of the character string; in this case, it erases the character to the left of the cursor. When the last character in a field is erased, the field remains empty, and any further <DEL> functions in the empty field result in a keyboard error beep. • In a right justified field, the <DEL> function erases the character that is to the right of the cursor and then shifts the data remaining to the right one position. • If the <DEL> key is pressed while the cursor is in the right-most character position of that field, the cursor does not shift to the left when that character is erased; it remains in the right-most position in the field. • When the last character in a field is erased, the field remains empty – i.e. any pre-filled data is not displayed. Pressing the DEL key in the empty field sounds a keyboard error beep. • The <DEL> key can delete data pre-filled by the host application. • If data is entered into a field and then deleted before the field is completed, the field remains unmodified when the cursor leaves the field or when the screen is transmitted.
Fcursor mode	• Refer to “Field Mode” at the beginning of this table. The <DEL> key operates in exactly the same manner in “Fcursor mode” as it does in “Field mode”.

4.5 Lock Messages

When information is transmitted to the host computer, the keyboard locks to prevent further data entry until the terminal receives a reply. A locked state is indicated by either “LOCK-B” (base) or “LOCK-H” (host) in the lower left corner of the display.

When the reply is received by the terminal, the lock message disappears and the keyboard can be used again.

4.6 Control Commands

A group of <CTRL> key commands can be used within TESS to dictate how the terminal will operate under a variety of conditions.

- <CTRL> *p* – Reprints the last print page sent from the host. This key combination will not print anything if a print page from the host was not previously received at the terminal.
- <CTRL> *s* – Displays the terminal status continuously. Below is a sample status line as it might appear at the bottom of your terminals screen:
  `Lock-B/Lock-H  fld  enh  “application name”`
- <CTRL> *w* – Displays the terminal when the terminal is in “Lock B” or “Lock H” mode. The status line would be similar to the sample above.
- <CTRL> *t* – Displays the terminal status with the terminal number instead of the name.
  `Lock-B/Lock-H  rep  “terminal nn”`
- <CTRL> *h* – Displays a menu of available hosts.

ANSI OPERATIONS 5

5.1 Configuration 73
5.2 Sending Data To The Host 73
5.3 Teklogix Keyboard And VT220 Equivalent Keys 74
5.4 Working With Sessions 75
5.4.1 Establishing A New Session 75
5.4.2 Listing Sessions And Moving To Other Sessions 75
5.4.3 Closing A Session 76
5.4.4 Printing A Screen 76
5.4.5 Smart Echo – Disabling 76

The Teklogix terminal in ANSI mode operates like most other ANSI terminals. This means software that supports ANSI terminals requires little or no changes.

5.1 Configuration

To configure the terminal for ANSI mode, the “Name” and “Type” of session – in this case, ANSI – must be specified in the Applications menu. This menu is described in the section titled, “Applications” on page 115.

Next, a unique terminal number must be assigned using the “Terminal #” parameter. This number should be unique across the entire system – that is, each terminal and each application session in each terminal across your system must have a unique number assigned. This parameter is described in the section titled “ANSI Settings” on page 116.

When Tekterm is launched, the first configured session will appear in the application. To display the next session in Tekterm when multiple sessions are running:

- Press <ALT> <F6>.

Each time this key combination is pressed, the next session window becomes active.

5.2 Sending Data To The Host

Teklogix terminals running ANSI transmit characters to the host as soon as they are typed.

The terminal also responds immediately to the device attribute requests “CSIc”, “CSI0c” and “ESCZ”.

Note: *For a more detailed description of the parameter settings for ANSI, refer to “ANSI Settings” on page 116.*

5.3 Teklogix Keyboard And VT220 Equivalent Keys

The Teklogix keyboard differs from most ANSI terminals. Table 5.1 maps the equivalent VT220 keys.

Teklogix Key	Equivalent VT220 Key
<UP> arrow	Up arrow
<DOWN> arrow	Down arrow
<RIGHT> arrow	Right arrow
<LEFT> arrow	Left arrow
<F1>-<F4>	PF1-PF4
<F5>	None
<F6>-<F10>	F6-F10
<F11>	F11 (ESC)
<F12>	F12 (BS)
<F13>	F13 (LF)
<F14>	F14
<F15>	Help
<F16>	Do
<F17>-<F20>	F17-F20
<F21>	Find
<F22>	Insert Here
<F23>	Remove
<F24>	Select
<F25>	Previous Screen
<F26>	Next Screen
<F27>-<F36>	None

Table 5.1 Teklogix Terminal Keyboard And VT220 Equivalent Keys

5.4 Working With Sessions

Important: ***Use only lowercase letters when entering commands at the "TCP >" prompt.***

5.4.1 Establishing A New Session

- **8255/8260**: Press <CTRL>, and type a lowercase *a*.
- **7035**: Press <CTRL> <ORANGE>, and type a lowercase *a*.

At the TCP> prompt:

- Type *tel* in lowercase letters followed by the *Host Name* or *IP address*.
- Press <ENTER>.
- Log in as usual to begin working with the new session.

5.4.2 Listing Sessions And Moving To Other Sessions

To list the current sessions:

- **8255/8260**: Press <CTRL>, and type a lowercase *a*.
- **7035**: Press <CTRL><ORANGE>, and type a lowercase *a*.

At the TCP> prompt:

- Type *sess* in lowercase letters, and press <ENTER>.

To move to another session:

- At the TCP> prompt, type *sess* in lowercase letters followed by the session number to which you want to move.
  e.g., Type *sess 2* to move to session 2.
- Press <ENTER>.

5.4.3 Closing A Session

To close a session:

- **8255/8260**: Press <CTRL>, and type a lowercase *a*.
- At the TCP> prompt, type *cl* in lowercase letters followed by the session number you want to close.
  e.g., Type *cl 2* to close session 2.
- Press <ENTER>.

- **7035**: Press <CTRL><ORANGE>, and type a lowercase *a*.
- At the TCP> prompt, type *cl* in lowercase letters.
- Press <ORANGE> again to turn Alpha mode off, and then type the session number you want to close.
  e.g., Press <ORANGE>, type *cl* , press <ORANGE> again, and type *2* to close session 2.
- Press <ENTER>.

5.4.4 Printing A Screen

To print each line of a screen with a CR/LF between each line:

- **8255/8260**: Press <CTRL>, and type *p*.
- **7035**: Press <CTRL> <ORANGE>, and type *p*.

The screen will be printed using the port configured as “Print”.

5.4.5 Smart Echo – Disabling

In some circumstances – like entering a password – you many want to temporarily disable “smart echo”, disguising the characters you type with ‘.’ (periods).

- **8255/8260**: Press <ALT> <ORANGE>, and type a ‘.’ (period).
- Type the necessary information using the terminal keyboard, and then press <ENTER> to return to “smart echo mode.

- **7035**: Press <ALT>, and then type a ‘.’ (period).
- Type the necessary information, and then press <ENTER> to return to “smart echo mode.

SETTING PARAMETERS 6

6.1 Using The Parameter Manager 81
6.2 Exiting Tekterm And Accessing The Display Menu 81
6.3 Working With Menus 83
6.3.1 Softkey Function Keys 83
6.3.2 Displaying Sub-Menus 84
6.3.3 Numeric Parameters 84
6.3.4 Y/N Parameters 85
6.3.5 Alpha Parameters 85
6.3.6 String Entry Parameters 85
6.3.6.1 Choosing An ASCII Character With The Arrow Keys 86
6.3.6.2 Adding Additional ASCII Characters 86
6.3.6.3 Entering Information In A String Entry Field 86
6.3.7 Saving Changes To Parameters 87
6.3.8 Resetting The Terminal 87
6.3.8.1 Resetting The 7035 87
6.3.8.2 Resetting The 8255 And 8260 87
6.3.9 Resetting Parameters To Default Values 87
6.4 Terminal Parameters 88
6.4.1 Displaying The Parameters Menu 88
6.5 System 90
6.5.1 Volume And Contrast 90
6.5.2 Key Click 91
6.5.3 Typematic Rpt 91
6.5.4 Panning 92
6.5.5 Backlight 94
6.5.5.1 7035 Backlight Parameters 94
6.5.5.2 8255 And 8260 Backlight Parameters 95
6.5.6 Code Page 95
6.5.7 Font Size – North American And European 96
6.5.8 Font Size – Chinese And Korean 97

6.5.9 Palette Remap 98
6.5.10 Watchdog Timer 99
6.5.11 Power – 7035 Only 99
6.5.12 One-Shot Mode 100
6.6 Scanner 101
6.6.1 Type 101
6.6.2 Options 102
6.6.2.1 Translate 102
6.6.2.2 Other Options 103
6.6.3 Barcode 105
6.6.3.1 Code 39 105
6.6.3.2 Code 128 107
6.6.3.3 EAN 13 108
6.6.3.4 EAN 8 110
6.6.3.5 UPC A 111
6.6.3.6 UPC E 112
6.6.3.7 Codabar 113
6.6.3.8 Code 93 113
6.6.3.9 Code 11 113
6.6.3.10 I 2 of 5 114
6.6.3.11 MSI/PLESSY 114
6.6.3.12 D 2 of 5 115
6.7 Applications 115
6.7.1 ANSI Settings 116
6.7.1.1 Host Conn 117
6.7.1.2 Screen 117
6.7.1.3 Char Set – North American And European 119
6.7.1.4 Char Set – Chinese And Korean 121
6.7.1.5 Video 122
6.7.1.6 Transmit 123
6.7.1.7 Keyboard 124
6.7.2 Serial 126
6.7.3 TESS Settings 126
6.7.3.1 Host Conn 127
6.7.3.2 Screen 127
6.7.3.3 Characters 129
6.7.3.4 Char Set 130

6.7.3.5 Serial 133
6.7.3.6 Tests 134
6.7.3.7 Scanner 134
6.7.3.8 Fields 136
6.7.4 Features 138
6.8 View Manager 139
6.9 Ports– Serial 1 And Console 2 141
6.9.1 Serial 1 And Console 2 Peripheral Options 141
6.9.2 Serial 1 And Console 2 Parameter Settings. 142
6.9.3 Setting The Terminal Console Port For Nomad 144
6.9.4 Setting The Terminal Console Port For Scan-See 144
6.9.4.1 Scan-See Parameters 144
6.9.4.4 Scan-See Display – Mapping The "Viewport" 145
6.10 Global Macros 150
6.10.1 Displaying The Global Macros Menu. 150
6.10.2 Displaying The Global Macros Table 151
6.10.3 Choosing An ASCII Character 152
6.10.4 Adding Additional ASCII Characters 152
6.10.5 Programming Special Keys Into Macros 153
6.11 Network 153
6.12 Radio 154
6.13 Sound 154

6.1 Using The Parameter Manager

Warning: ***Parameters should not be altered without a clear understanding of how they operate. Parameters that are incorrectly set can increase response time or cause communication difficulties. Generally, parameters are configured for each site during installation.***

The Parameter Manager provides access to the parameter menus. The values assigned to the parameters can be viewed and adjusted to optimize communication at the site in which a terminal is operating.

6.2 Exiting Tekterm And Accessing The Display Menu

Normally, the Tekterm application is automatically launched when the terminal is turned on. To launch the Parameters menu, you first need to exit the Tekterm application:

- **8255/8260**: Press <ALT>, and type the letter *x*.
- **7035**: Press <ALT> <ORANGE>, and type the letter *x*.

The start up "Display Menu" appears on the terminal screen. From this menu, you can launch the "Parameters" menu, relaunch the Tekterm application, or go to the DOS prompt.

```
01 Display Menu
A   Parameters
B   Emulations
C   DOS Prompt
```

To access any of these options, type the letter corresponding to the item you want to access.

To launch the "Parameters" menu:

- **8255/8260**: Type the letter *a*.
- **7035**: Press the <ORANGE> key before typing *a*.

A Password screen is displayed.

```
Password
......
```

Note: *A password is not requested when the terminal emulation application is launched.*

A supervisory or a Teklogix level password is required to display the complete “Parameters” menu or to go to the DOS prompt.

Important: ***If you’re using a 7035 hand-held and your password consists of numeric rather than alphabetic characters, remember to press the <ORANGE> key a second time to turn it off before entering your numeric password. Check the status area at the bottom of the screen to make sure the onscreen indicator “ORANGE” is no longer displayed.***

- Type your password, and press <ENTER>.

When the correct password is entered, a Change screen is displayed.

```
Change
......
```

Do not enter a value in the Change screen if you do not want to change your password. To display the “Parameters” menu without changing your password:

- Press <ENTER> at the Change screen.

Changing A Password

When you type your password correctly in the Password screen, the Change screen is displayed. A password can have up to six alphanumeric characters and is case sensitive. It is set at the factory to “123456”.

To change your password:

- Type the new password in the Change screen, and press <ENTER>.

If you change your password, set all the terminals to the same password, write it down, and keep it in a secure place. If the password is lost, the parameters can only be changed by Teklogix personnel.

6.3 Working With Menus

All parameters are listed in menus. The <UP> and <DOWN> arrow keys are used to move the cursor up and down the current menu. The currently selected parameter name is displayed in reverse video. To help you work with the parameters and menus, a set of pre-programmed function keys – <F1> through <F4> – can be used to move back and forth between menus and save changes made to any parameters.

There are four types of parameters: numeric, Y/N, alpha and string entry.
In addition, some menus have sub-menus attached to them. This section of the manual describes how to work with all types of parameters and sub-menus.

6.3.1 Softkey Function Keys

To speed the process of moving through menus and changing parameters, function keys <F1> to <F4> have been programmed to perform specific actions. Table 6.1 describes these function keys.

Function Key	Softkey Function
<F1>	NEXT – Displays the next sub-menu
<F2>	PREV – Displays the previous menu.
<F3>	DEFLT – Restores parameters to default settings – even after pressing <F4> to save the changes.
<F4	SAVE – Saves a change to a parameter value.

Table 6.1 Softkeys

6.3.2 Displaying Sub-Menus

The "**»**" character appearing to the right of the menu item indicates that it has a sub-menu.

Displaying Sub-Menus

To display a sub-menu:

- Use the <UP> and <DOWN> arrow keys to position the cursor on the menu item with the sub-menu you want to display.
- Press <F1> – the "NEXT" menu function key.

Returning To The Previous Menu

- Press <F2> – the "PREV" function key, ***or***
- Press <ESC>.

6.3.3 Numeric Parameters

Numeric parameters are displayed in reverse video. To increment or decrement a number:

- Press the <RIGHT> or <LEFT> arrow keys, ***or***
- Type the desired number in the field. Negative values are entered by typing a "-" (minus) sign and then the number.
- Press <ENTER>.

Each numeric parameter has a preset range of numbers assigned to it – for example, a preset range of 1 through 10. If you attempt to enter a number which either exceeds 10 or falls below 1, the incorrect value will be rejected – the original value for this parameter, if any, will be displayed.

6.3.4 Y/N Parameters

Y/N parameters can only be enabled (Y) or disabled (N). To enable or disable a Y/N parameter:

- Press the <RIGHT> or <LEFT> arrow key *once*, ***or***
- Type *y* to enable or *n* to disable the parameter. If you're using a 7035, remember to press the <ORANGE> key before typing *y* or *n*.

Some Y/N parameters have sub-menus. For these parameters, a double right arrow (**»**) appears next to the "Y" or "N".

6.3.5 Alpha Parameters

Alpha characters appear in reverse video in this type of parameter. The allowable values for this type of parameter consist of a predetermined set of acceptable letters or words. To cycle through the set:

- Press the <RIGHT> or <LEFT> arrow keys.

6.3.6 String Entry Parameters

Important: ***For detailed information about using string entry fields to program macro keys, refer to "Global Macros" on page 150.***

A sequence or string of characters can be entered in this type of parameter. When a string entry parameter contains data, it is displayed in reverse video. (Empty fields are not displayed in reverse video.) The methods that can be used to enter information in string entry parameters are described in this section.

In string entry parameters, the <UP> arrow, <DOWN> arrow, <ENTER> and <DEL> keys have the following functions:

- The <UP> and <DOWN> arrow keys move the cursor between entry fields in the direction of the arrow.
- <ENTER> completes the entry field.
- <DEL> deletes the character to the left of the cursor.
- <CLR> (key combination <BLUE> <DEL>) clears the entire field.

6.3.6.1 Choosing An ASCII Character With The Arrow Keys

Important: Make sure the <CTRL> and <SHIFT> keys are turned off!

By pressing either the <RIGHT> or <LEFT> arrow key, you can cycle through a set of printable characters not directly accessible from the keyboard. The ASCII sets differ slightly depending on the type of terminal you're using.

7035: / < > % ^ & ` ~ | [ ] { } " ' ? = + ;
8255/8260: ^ & ‘ ~ | [ ] { } ’ "

- Press the <RIGHT> arrow to display the next character in this sequence, and the <LEFT> arrow to display the previous one.

6.3.6.2 Adding Additional ASCII Characters

When you've chosen an ASCII character and want to add another one in the same field, the cursor must be moved to the right of the existing character. Normally, pressing the <RIGHT> arrow key moves the cursor to the right, but in a string entry field, pressing the <RIGHT> arrow key cycles through the available ASCII characters instead. **If you've already chosen an ASCII character** and want to add another one in the field, you need to take a few extra steps to move the cursor to the right.

To add another ASCII character in the string entry field, next to the one you've already chosen:

- Type a numeric character – for example, type the number 7.
- Next, press the <DEL> key

The cursor is now positioned to the right of the previously selected ASCII character.

- Press the <RIGHT> or <LEFT> arrow key to scroll through the ASCII characters, and select another character.

6.3.6.3 Entering Information In A String Entry Field

In addition to using the fixed set of ASCII values assigned to this type of parameter, you can also type text in a string entry field.

- Type the required text in the string entry field – including letters, numbers and symbols.
- Press <ENTER> to save the text.

6.3.7 Saving Changes To Parameters

Whenever a parameter value is altered, the new value must be saved. To do this:

- Press <F4> – the “SAVE” function key.

If a parameter value is changed and the menu exited before the change is saved, a dialog box appears asking whether or not the operator wants to save the changes.

6.3.8 Resetting The Terminal

Note: *Regardless of the type of terminal you are using, a reset will result in a complete reboot of the unit. When the terminal is reset, it reboots to the Tekterm application and parameter changes take effect.*

6.3.8.1 Resetting The 7035

To reset a 7035:

- Press and hold down the <BLUE> key and the <ENTER/ON> key for a minimum of six seconds.

6.3.8.2 Resetting The 8255 And 8260

To reset an 8255 or 8260:

- Using the On/Off switch, turn the terminal off and back on again.

6.3.9 Resetting Parameters To Default Values

Important: ***When <F3> – the DEFAULT key – is pressed, all parameter values revert to the factory defaults, including those values that you’ve changed and saved.***

- Press <F3> – the “DEFAULT” function key – to reinstate the default parameter values.
- Press <F4> – the “SAVE” function key – to save the changes.
- Reset the terminal. See "Resetting The Terminal" above.

6.4 Terminal Parameters

Warning: ***Parameters should not be altered without a clear understanding of how they operate. Parameters that are incorrectly set can increase response time or cause communication difficulties. Generally, parameters are configured for each site during installation.***

The “Parameters” menus can only be accessed by individuals with the proper security password. Security is divided into two levels: Supervisory and Teklogix Personnel passwords.

Important: ***Only individuals with a supervisory or Teklogix personnel level password can access and change these parameters.***

6.4.1 Displaying The Parameters Menu

The “Parameters” application is launched from the start up “Display Menu”. If your terminal is currently in the Tekterm application:

- **8255/8260**: Press <ALT>, and type the letter *x*.
- **7035**: Press <ALT><ORANGE>, and type the letter *x* to exit Tekterm.

The “Display Menu” appears on your screen.

```
01 Display Menu
A   Parameters
B   Emulations
C   DOS Prompt
```

To display the “Parameters” menu from the startup “Display” menu:

- **8255/8260**: Type the letter *a*.
- **7035**: Press the <ORANGE> key before typing *a*.

```
Parameters
System          »
Scanner         »
Applications    »
View Manager    »
Ports           »
Global Macros   »
Network         »
Radio           »
Sound           »
```

The Parameters menu is a first level menu that contains parameters for the configuration and customization of a terminal. To access sub-menus attached to these parameters:

- Use the <UP> and <DOWN> arrow keys to position the cursor on the appropriate menu item.
- Press <F1> – the “NEXT” key – to display the sub-menu.

To display the previous menu:

- Press <F2> – the “PREVIOUS” key, ***or***
- Press the <ESC> key.

6.5 System

The parameters listed under the “System” menu allow you to customize terminal attributes such as volume, contrast and font size.

System		Range
Volume	9	0..15
Contrast	-5	-10..10
Key Click	Y »	see text
Typematic Rpt	Y »	see text
Panning	»	see text
Backlight	»	see text
Code Page	850	437-850
Font Size	»	see text
Palette Remap	»	see text
Watchdog timer	0	0..30
Power	»	see text
One-Shot Mode	»	see text

Note: *The “Code Page” parameter is not available in the Chinese and Korean versions of this software.*

6.5.1 Volume And Contrast

Both the terminal beeper volume and the screen contrast can be adjusted using the <BLUE> key in combination with function keys <F1> to <F4>. However, these changes are not saved to memory – that is, when the terminal is reset, any volume and contrast adjustments are lost. For information on manual beeper volume adjustments, refer to “Beeper Volume – <BLUE> <F3> And <F4>” on page 43. For details on manual contrast adjustments, refer to “Contrast Adjustment – <BLUE> <F1> And <F2>” on page 44.

Adjustments made to the terminal beeper and the display using the “Volume” and “Contrast” parameters are *saved to memory* so that if the terminal is turned off or reset, the adjustments are saved.

Volume

The “Volume” parameter is used to adjust the beeper volume of the terminal beeper. The higher the value entered, the louder the beeper volume of the terminal. When a volume adjustment is made using this parameter, it is saved to memory.

Contrast

Note: *The "Contrast" parameter is not available for 8255 terminals equipped with vacuum fluorescent displays.*

This parameter is used to adjust the terminal screen contrast. The higher the value assigned, the darker the screen contrast.

6.5.2 Key Click

Key click		Range
Tone	2675	200-5000
Duration	75	25-150

The parameters provided in the Key Click sub-menu are used to adjust the sound emitted from the terminal when a key is pressed. When "Key Click" is set to Y, an audible sound is emitted from the terminal with each key pressed. Setting this parameter to "N" disables the key click sound.

Tone

The value entered in the "Tone" parameter determines the frequency of the key clicks and is measured in Hz. The higher the value, the higher the pitch.

Duration

The value entered in the "Duration" parameter measures the length of time a sound is emitted when a key is pressed and is measured in milliseconds.

6.5.3 Typematic Rpt

Typematic rpt		Range
Delay	500 ms	see text
Rate	5 cps	1 cps..10 cps
Test		see text

When this parameter is enabled (set to "Y"), pressing and holding down an alphanumeric key will cause that character to repeat until the key is released.

Delay

The value assigned for this parameter determines the delay in milliseconds between repeat characters. The allowable values are: `150 ms, 200 ms, 250 ms, 300 ms, 350 ms, 400 ms, 450 ms` and `500 ms`.

Rate

The value assigned for the "Rate" parameter determines how quickly the key you press repeats and is measured in characters per second (cps). The allowable values range from `1 cps` to `10 cps`.

Test

This parameter is provided as a test field. Once you've enabled (set to "Y") the "Typematic rpt" parameter and assigned a "Delay" and "Rate" value, position your cursor in this field, press and hold down an alphanumeric key to test the rate of character repeats.

6.5.4 Panning

Important: ***The "Auto Pan" feature that is tailored by these parameters is used by the DOS command line or by applications that do not provide auto panning (e.g., the Parameters menus).***

Tekterm is equipped with it's own panning capabilities and does not execute panning as described in this section.

Panning		Range
Auto pan	y	Y/N
Left margin	5	0-25
Right margin	1	0-25
Bottom margin	1	0-20
X increment	1	1-40
Y increment	1	1-12

Auto Pan, Left Margin, Right Margin And Bottom Margin

Note: *The "X increment" and "Y increment" parameters are used for* ***manual*** *panning only. Auto panning relies on the values set in the "Left margin", "Right margin" and "Bottom margin" parameters.*

"Auto Pan" is used to enable and disable auto panning. When it is enabled (set to "Y"), the values set in the "Left Margin", "Right Margin" and "Bottom Margin" are used to determine the number of characters that will always be visible to the left and right of the cursor and the number of lines that will always be visible below the cursor. If the cursor moves beyond the value specified, the entire contents of the screen are panned or shifted to comply with the values set in the margin parameters.

> Example: The value set in the "Left Margin" and "Right Margin" is 2. The value set in the "Bottom Margin" is 3. This specifies that 2 characters must always be displayed to the left and right of the cursor, and 3 lines must always be displayed below the cursor (Bottom Margin).
>
> The contents of the screen will not auto pan or shift until the cursor is moved past the minimum specified in a margin parameter. If the cursor is moved past the "Left Margin" setting, the screen pans to the right. If the cursor moves past the "Right Margin" setting, the screen pans to the left. If the cursor is moved beyond the "Bottom Margin" setting, the screen contents pan up.

X Increment And Y Increment

Manual panning – shifting the contents of the screen using the <BLUE> key in combination with the <LEFT>, <RIGHT>, <UP> and <DOWN> arrow keys – relies on the values set in "X Increment" and "Y Increment" to determine the number of columns (spaces) and rows (lines) to pan or shift.

"X Increment" determines the number of spaces the screen pans to the left or right when the <BLUE> key is pressed followed by the <LEFT> or <RIGHT> arrow key.

"Y Increment" determines the number of lines the screen pans up or down when the <BLUE> key is pressed followed by the <UP> or <DOWN> arrow key.

6.5.5 Backlight

Backlight parameters vary depending on the type of terminal used – 7035 hand-held 8255 or 8260 vehicle-mount.

6.5.5.1 7035 Backlight Parameters

Backlight		Range
Threshold	192	0..255
On Time	60 sec	see text
Intensity	0	-5..5

Threshold

The 7035 is equipped with automatic light sensing. The value entered in this parameter determines how dark the ambient light needs to be before the backlight turns on. The higher the value, the darker the ambient light must be before the backlight turns on.

On Time

The value entered in this parameter determines how long the backlight will stay on after a key is pressed, a scan is completed or data is received. “On Time” is measured in seconds.

The allowable values are: `Disabled, 5 secs, 10 secs, 15 secs, 20 secs, 30 secs, 60 secs` and `Always On`. Choosing `Disabled` turns the backlight feature off. Choosing `Always On` sets the backlight to stay on constantly, whether or not a key is pressed or data is received.

Intensity

This parameter is used to adjust the light intensity of the 7035 terminal screen. The higher the value, the greater the screen light intensity.

6.5.5.2 8255 And 8260 Backlight Parameters

Backlight		Range
Screen	Always On	see text
Keyboard	10 secs	see text

Screen

Important: ***8255 terminals with vacuum fluorescent displays do not require a "Screen" backlighting option. They offer only the "Keyboard" backlighting option.***

The value assigned for the "Screen" parameter determines how long the backlight will stay on after a key is pressed, a scan is completed or data is received. This parameter is measured in minutes.

The allowable values are: `10 mins, 15 mins, 20 mins, 30 mins, 60 mins` and `Always On`. Choosing `Always On` sets the backlight to stay on constantly, whether or not a key is pressed or data is received.

Keyboard

This parameter determines how long the keyboard backlight stays on after a key is pressed. The "Keyboard" parameter is measured in seconds and minutes.

The allowable values are: `Disabled, 5 secs, 10 secs, 20 secs, 30 secs, 1 min, 2 mins, 4 mins` and `Always On`. As you may have guessed, Disabled turns off the keyboard backlight while Always On sets the backlight to stay on at all times.

6.5.6 Code Page

The code page files accessible from this parameter contain the entire font library supported by your terminal. It is set to code page `850` by default as this page supports a large variety of characters useful in Canada, the U.S. and Europe. The U.S. code page is `437`. Refer to a Microsoft Windows and MS DOS or an IBM DOS code page reference book for code page details.

6.5.7 Font Size – North American And European

Important: ***Because the 8260 vehicle-mount terminal is equipped with a full size, 25 x 80 display, full screens can easily be displayed without reducing the font size. For this reason, the 8260 does not provide a Font menu .***

This parameter is used to change the font size displayed on the 7035 hand-held terminal and the 8255 vehicle-mount terminals. Font sizes are represented as lines x characters. Font availability varies depending on the type of terminal in use. Each terminal type offers only those font sizes that it supports.

- Press the <LEFT> or <RIGHT> arrow keys to scroll through the available fonts sizes.

8255 Vacuum Fluorescent Display Fonts

8255 Vacuum Fluorescent Display (VFD)
10x51
10x42
10x32
5x42
5x32

8255 Liquid Crystal Display Fonts

8255 Liquid Crystal Display (LCD)
25x80
14x80
12x80

7035 Fonts

7035 Display
18x32
18x26
18x20
10x26
10x20
9x20

6.5.8 Font Size – Chinese And Korean

Important: ***Chinese and Korean characters are double-byte characters – one double-byte character occupies two single-width character positions. The font sizes available for the Chinese and Korean character sets are measured in single-width characters.***

8255 Vacuum Fluorescent Display (VFD) Fonts

Chinese Font Sizes 8255 VFD	Korean Font Sizes 8255 VFD
4x32	5x32

8255 Liquid Crystal Display (LCD) Fonts

Chinese Font Sizes 8255 LCD	Korean Font Sizes 8255 LCD
11x80	12x80

8260 Liquid Crystal Display (LCD) Fonts

Chinese Font Sizes 8260 LCD	Korean Font Sizes 8260 LCD
25x80	25x80

7035 Fonts

Chinese Font Sizes 7035	Korean Font Sizes 7035
8x20	9x20

6.5.9 Palette Remap

A DOS-based application generally uses a VGA colour palette. On Teklogix terminals, these colours are converted to grey scale with varying degrees of success. While grey scale displays well on a 7035 hand-held terminal, it does not display as well on an 8255 LCD or an 8260 vehicle-mount terminal. The “Palette Remap” parameter allows you to substitute default application colours with colours that *will* display well on your Teklogix terminal.

Note: *All built-in Teklogix software uses only intense white (VGA index 15) and black (VGA index 0), both of which display well on Teklogix terminals.*

The values on the left-hand side of the “Palette Remap” screen represent the original VGA palette; these values cannot be changed. The values on the right-hand side of this screen can be altered to remap colours as they reach your Teklogix terminal display. For example, suppose that you want your terminal to always replace the colour red with the colour black. You need to change the *red* colour value of *4* to the *black* colour value of *0*.

```
Palette Remap
[0]   Black        [0]
[1]   Blue         [1]
[2]   Green        [2]
[3]   Cyan         [3]
[4]   Red          [4]
[5]   Magenta      [5]
[6]   Brown        [6]
[7]   Lt Grey      [7]
[8]   Dark Grey    [8]
[9]   Lt Blue      [9]
[a]   Lt Green     [a]
[b]   Lt Cyan      [b]
[c]   Lt Red       [c]
[d]   Lt Magenta   [d]
[e]   Yellow       [e]
[f]   White        [f]
```

To remap a colour:

- Highlight the colour you want to remap, and press the <RIGHT> or <LEFT> arrow key until the colour value you want is displayed.
- Press <F4> to save your changes, and reset the terminal. (See page 87 for terminal reset information.)

6.5.10 Watchdog Timer

Setting this parameter to `Enabled` signals the terminal to reboot automatically whenever control of the terminal is not periodically returned to a system monitor program (running in the background). This allows for recovery from programs that "crash" or "hang" the terminal.

If "Watchdog Timer" is set to `Disabled,` the terminal will not reboot automatically under the circumstances described above.

6.5.11 Power — 7035 Only

Power		Range
Power down	4 mins	see text
Power off	1 hour	see text

Power Down

When the amount of time specified in the "Power Down" parameter expires without any activity, the terminal goes into suspend mode, a power-saving mode. Pressing any key reinstates full power mode.

The possible values for this parameter are: `Disabled, 1 min, 2 mins, 4 mins, 8 mins, 16 mins, 32 mins` and `60 mins`.

Power Off

Important: ***The value assigned for this parameter is not recognized until the value in the "Power Down" parameter has expired.***

When the time specified for the "Power Off" parameter has expired, the terminal turns off. A full reboot is required to return the terminal to full operating mode.

The allowable values for this parameter are: `Disabled, 1 min, 8 mins, 16 mins, 32 mins, 1 hour, 2 hours` and `4 hours.`

This parameter timeout occurs whether the terminal is turned on or off. That is, even if the terminal is switched off, it will return to its last operating state when switched on. If it is left 'off' for the time period specified by this parameter, a full reboot will occur when switched back on.

6.5.12 One-Shot Mode

One Shot Mode		Range
Orange Key	N	Y/N
Blue Key	Y	Y/N

In "One Shot" mode, a key is only active until the next key is pressed. To lock a key "ON", it must be pressed twice. When a key is locked on, it remains active until it is pressed a third time to deactivate it.

The "One Shot" menu allows you to configure the <BLUE> and <ORANGE> keys to operate in one shot mode or to lock "ON" automatically after being pressed only once.

Orange Key

By default, the <ORANGE> key automatically locks" ON" after being pressed once. If you prefer that this key only remain active until the next key is pressed (one shot mode):

- Set the "Orange Key" parameter to "Y".

To set this key to lock "ON" automatically after being pressed only once:

- Set the "Orange Key parameter to "N".

Blue Key

The <BLUE> key is set to one shot mode by default – it is only active until the next key is pressed.

To set this key to lock “ON” automatically after being pressed only once:

- Set the “Blue Key” parameter to “N”.

To set the <BLUE> key to one shot mode:

- Set the “Blue Key” parameter to “Y”.

6.6 Scanner

```
Scanner
Type                    »
Options                 »
Barcode                 »
```

6.6.1 Type

Type		Range
Int	none	None, Long Range, High Vis, Standard
Ext	none	None, Wand, Non-Decoded

The Type sub-menu allows the user to identify the type of internal and/or external scanner being used. The 7035 hand-held terminal can support both an internal and an external scanner at the same time.

Int – 7035 Only

The “Int” (internal) parameter identifies the type of internal scanner installed in the 7035 – `Long Range, High Visibility` or `Standard` range. If an internal scanner has not been installed, set this parameter to `None`.

Ext

The “Ext” (external) parameter identifies the type of external scanner attached to the terminal – `Wand` or `Non-Decoded`. If an external scanner is not being used, set this parameter to `None`.

6.6.2 Options

Options		Range
Translate	»	see text
Verify	0	0..15
Security	0	0..99
Short Code	N	Y/N
Click Time	250	0..1000
Click Data		0..255
Scan Result	Y	Y/N
Scan Indic	Y	Y/N
Dot Time	2.0 sec	0..3.0 Sec

6.6.2.1 Translate

```
Translate
In    #1
Out   #1
.
.
.
In    #8
Out   #8
```

Important: ***For detailed instructions on inserting characters or special keys (e.g., <ENTER>, <DEL>, etc.) in these fields, refer to "Global Macros" on page 150 to page 153.***

In #n

This string entry parameter is compared with the decoded bar code reading. If there is a match, the “Out” string is translated into the decoded bar code. The first character of the “In” string specifies where the rest of the string can occur within the decoded bar code reading.

The possible values for this character include:

- **b** Compare with the beginning of decoded bar code.
- **e** Compare with the end of decoded bar code.
- **x** Compare with the entire decoded bar code.
- **a** Compare anywhere within the decoded bar code (default).

Note: *Translation of the decoded bar code occurs after all other modifications*

to the bar code have been done (e.g., prefix char, suffix char, strip, etc.).

Out #n

If there is a match between the decoded bar code and the corresponding “In” string, the decoded bar code will be translated into the “Out” string. This string entry parameter can be null, or it may contain any combination of standard and special characters (e.g., function keys, <ENTER>, etc.).

6.6.2.2 Other Options

Verify

The value entered for this parameter determines the number of correct additional decodes required *after* the initial decode before a bar code is accepted. Higher values significantly increase the time it takes to decode a bar code.

Security

This parameter controls the tolerance for decoding edge-to-edge bar codes (Code 93, Code 128, UPC/EAN). Lower values have a lower tolerance for misreads, but they also increase the time it takes to decode the bar code.

Short Code

When enabled (set to “Y”), this parameter allows scanning of short I 2 of 5 bar codes (2 characters). When “Short Code” is disabled (set to “N”), these short bar codes are rejected.

Setting this parameter to “Y” may reduce the robustness of the decoding since the terminal must decode more potential bar codes. For this reason, it is not recommended that “Short Code” be enabled for general-purpose bar codes with 4 or more characters.

Click Time

Note: *This parameter only effects terminals using long-range scanners.*

This parameter controls the maximum gap time (in milliseconds) for a double-click. If the time between the first and second clicks of the scanner trigger is within this time, it is considered a double-click. A value of zero disables this feature.

A double-click produces different results depending on whether or not a value is assigned in the “Click Data” parameter (see page 104). When a value is ***not*** assigned for the “Click Data”, double-clicking the scanner trigger overrides the target dot delay set in the “Dot Time” parameter and initiates a normal scan sweep. If a value ***is*** assigned for the “Click Data” parameter, double-clicking the scanner trigger inserts the “Click Data” value rather than initiating a scan.

Click Data

For both integrated and external scanners, this parameter determines which character is sent to TESS or ANSI following a double-click. Enter the ASCII value of the character desired. You can also press the <LEFT> and <RIGHT> arrow keys to scroll through a set of ASCII characters not available from the keyboard.

Scan Result — 7035 Only

When this parameter is enabled (set to “Y”), the type of bar code and the result of the scan appear on the terminal screen. Note that this information is only displayed after a successful decode and only as long as the scanner trigger is pressed. When the trigger is released, this information is cleared from the screen.

Scan Indic — 7035 Only

When this parameter is enabled (set to “Y”), the laser warning logo appears on the display whenever the scanner is activated. For the Teklogix 7035-I integrated terminal, this message is mandatory and appears even if this parameter is disabled (set to “N”).

Dot Time — 7035 Only

Important: ***“Dot Time” appears in this menu only when “Long Range” is selected as the internal scanner option. Internal scanner options are described on page 101 under the heading “Int”.***

The value selected for “Dot Time” determines how long the targeting dot remains on before the scanner switches to a normal scan sweep. This value is measure in 0.5 second intervals from 0 (zero) to 3.0 seconds.

6.6.3 Barcode

All the available bar code symbologies can be selected from this menu. For each symbology, there are options in a sub-menu. The terminal automatically discriminates between the selected codes. Some restrictions may apply.

Important: ***To improve the decode speed and performance, enable (set to "Y") only those codes that are required by the application.***

```
Barcode
Code 39          Y »
Code 128         Y »
EAN 13           Y »
EAN 8            Y »
UPC A            Y »
UPC E            Y »
Codabar          N »
Code 93          N »
Code 11          N »
I 2 of 5         N »
MSI/PLESSY       N »
D 2 of 5         N »
```

6.6.3.1 Code 39

```
Code 39
Full Ascii        N
Mod 43 Chk        N
Mod 10 Chk        N
Include Chk       N
AIAG Strip        N
Err Accept        N
Size/Chars        »
```

Full Ascii

If this parameter is enabled (set to "Y"), the characters +, %, and / are used as escape characters. The combination of an escape character and the next character is converted to an equivalent ASCII character.

Mod 43 Chk

If this parameter is enabled (set to “Y”), the Mod 43 check digit is calculated.

Mod 10 Chk

If this parameter is enabled (set to “Y”), the Mod 10 check digit is calculated.

Include Chk

If this parameter is enabled (set to “Y”), the check digit is included with the decoded bar code data.

AIAG Strip

If this parameter is enabled (set to “Y”), the AIAG data identifier is removed from each decoded Code 39 label. The data identifier occurs in the first position next to the Code 39 start character. It can be a single alphabetic character or some numeric digits followed by an alphabetic character. This identifier defines the general category or specific use of the data contained in the rest of the bar code.

Err Accept

If the “Err Accept” and “AIAG Strip” parameters are enabled (set to “Y”), all label data without an AIAG identifier character is accepted. If the “Err Accept” parameter is disabled (set to “N”) and the “AIAG Strip” parameter is enabled (set to “Y”), the label data is not accepted.

Size/Chars

Size/Chars		Range
Field Size	0	0-99
Prefix Char	0	0-127
Suffix Char	0	0-127
Strip Leading	0	0-127
Strip Trailing	0	0-127

Field Size

The field size is the length of the field after the first character is stripped and the prefix and suffix characters are added. If the field size is non-zero, only bar codes of that length are passed through.

Prefix Char

This character, if non-zero, is added before a successfully decoded bar code. Enter the ASCII decimal equivalent of this character. Enter a value of “0” (zero) if no prefix is to be added.

Suffix Char

This character, if non-zero, is added after a successfully decoded bar code. Enter the ASCII decimal equivalent of this character. Enter a value of “0” (zero) if no suffix is to be added.

Strip Leading

This parameter determines the number of characters that will be removed from the beginning of the bar code before the prefix character is added.

Notes:

1. *The appended character is treated as any other keyboard character. For example, if <F1> is entered, the usual action for that function key is performed. With ANSI emulation, the terminal transmits the escape sequence associated with the function immediately after the bar code data.*
2. *For Code 39 bar codes, the “AIAG Strip” is performed before the “Strip Leading”.*

Strip Trailing

The value entered in this parameter determines the number of characters that will be removed from the end of the bar code before the suffix character is added.

6.6.3.2 Code 128

```
Code 128
Standard          Y
UCC 128           N
EAN/UCC 128       N»
Size/Chars         »
```

Standard

Set “Standard” to “Y” if Code 128 is desired.

UCC 128

UCC 128 is a variation of Code 128.

EAN/UCC 128

Set “EAN/UCC 128” to “Y” to enable this type of bar code. “EAN/UCC 128” bar codes include group separators and start codes. This type of bar code has a sub-menu attached to it – “Include Sym”.

```
Include Sym        N
```

Enabling (setting to “Y”) “Include Sym” causes the group separator(s) and start code contained in this type of bar code to be displayed on the terminal screen.

Size/Chars

See “Size/Chars” on page 106.

6.6.3.3 EAN 13

```
EAN 13
Inc Country        Y
Include Chk        Y
Size/Chars         »
Addendum           Disabled
```

Inc Country

If this parameter is enabled (set to “Y”), the country code is included with the decoded bar code data.

Include Chk

If this parameter is enabled (set to “Y”), the check digit is included with the decoded bar code data.

Size/Chars

```
Size/Chars          Range
Prefix Char       0   0-127
Suffix Char       0   0-127
Strip Leading     0   0-127
Strip Trailing    0   0-127
```

Prefix Char

This character, if non-zero, is added before a successfully decoded bar code. Enter the ASCII decimal equivalent of this character. Enter a value of “0” (zero) if no prefix is to be added.

Suffix Char

This character, if non-zero, is added after a successfully decoded bar code. Enter the ASCII decimal equivalent of this character. Enter a value of “0” (zero) if no suffix is to be added.

Strip Leading

This parameter determines the number of characters that will be removed from the beginning of the bar code before the prefix character is added.

Notes:

1. *The appended character is treated as any other keyboard character. For example, if <F1> is entered, the usual action for that Function key is performed. With ANSI emulation, the terminal transmits the escape sequence associated with the function immediately after the bar code data.*
2. *For Code 39 bar codes, the “AIAG Strip” is performed before the “Strip Leading”.*

Strip Trailing

The value entered in this parameter determines the number of characters that will be removed from the end of the bar code before the suffix character is added.

Addendum

Important: ***Before “Addendum” can take effect, the “Short Code” parameter in the Options menu (see page 103) must be set to “Y”.***

An addendum is a separate bar code, supplementary to the main bar code. This parameter provides three options: `Disabled`, `Options` and `Required`. Depending on the value chosen for this parameter, an addendum is recognized or ignored.

When “Addendum” is set to `Disabled`, the scanner does not recognize an addendum. If this parameter is set to `Optional`, the scanner searches for an addendum and if one exists, appends it to the main bar code. When the parameter is set to `Required`, the scanner does not accept the main bar code without an addendum.

6.6.3.4 EAN 8

```
EAN 8
Include Chk     Y
Size/Chars      »
Addendum        Disable
```

Include Chk

If this parameter is enabled (set to "Y"), the check digit is included with the decoded bar code data.

Size/Chars

See "Size/Chars" beginning on page 108.

Addendum

Important: ***Before "Addendum" can take effect, the "Short Code" parameter in the Options menu (see page 103) must be set to "Y".***

An addendum is a separate bar code, supplementary to the main bar code. This parameter provides three options: `Disabled`, `Options` and `Required`. Depending on the value chosen for this parameter, an addendum is recognized or ignored.

When "Addendum" is set to `Disabled`, the scanner does not recognize an addendum. If this parameter is set to `Optional`, the scanner searches for an addendum and if one exists, appends it to the main bar code. When the parameter is set to `Required`, the scanner does not accept the main bar code without an addendum.

6.6.3.5 UPC A

```
UPC A
Inc Num Sys      N
Include Chk      N
Size/Chars       »
Addendum         Disabled
```

Inc Num Sys

If this parameter is enabled (set to “Y”), the number system digit is included with the decoded bar code data.

Include Chk

If this parameter is enabled (set to “Y”), the check digit will be included with the decoded bar code data.

Size/Chars

See “Size/Chars” beginning on page 108.

Addendum

Important: ***Before “Addendum” can take effect, the “Short Code” parameter in the Options menu (see page 103) must be set to “Y”.***

An addendum is a separate bar code, supplementary to the main bar code. This parameter provides three options: `Disabled`, `Options` and `Required`. Depending on the value chosen for this parameter, an addendum is recognized or ignored.

When “Addendum” is set to `Disabled`, the scanner does not recognize an addendum. If this parameter is set to `Optional`, the scanner searches for an addendum and if one exists, appends it to the main bar code. When the parameter is set to `Required`, the scanner does not accept the main bar code without an addendum.

6.6.3.6 UPC E

```
UPC E
Exp to UPC A    Y
Inc Num Sys     Y
Include Chk     Y
Size/Chars      »
Addendum        Disable
```

Exp to UPC A

Setting this parameter to "Y" enables a non-standard decoding that returns 12 digits from the 6 digit UPC E bar code.

Inc Num Sys

If this parameter is enabled (set to "Y"), the number system digit is included with the decoded bar code data.

Include Chk

When enabled, the check digit is included with the decoded bar code data.

Size/Chars

See "Size/Chars" beginning on page 108.

Addendum

Important: ***Before "Addendum" can take effect, the "Short Code" parameter in the Options menu (see page 103) must be set to "Y".***

An addendum is a separate bar code, supplementary to the main bar code. This parameter provides three options: `Disabled`, `Options` and `Required`. Depending on the value chosen for this parameter, an addendum is recognized or ignored.

When "Addendum" is set to `Disabled`, the scanner does not recognize an addendum. If this parameter is set to `Optional`, the scanner searches for an addendum and if one exists, appends it to the main bar code. When the parameter is set to `Required`, the scanner does not accept the main bar code without an addendum.

6.6.3.7 Codabar

```
Codabar
Size/Chars          »
```

Size/Chars

See “Size/Chars” beginning on page 106.

6.6.3.8 Code 93

```
Code 93
Size/Chars          »
```

Size/Chars

See “Size/Chars” beginning on page 106.

6.6.3.9 Code 11

```
Code 11
1 Chk Digit         N
2 Chk Digits        Y
Include Chk         N
Size/Chars          »
```

1 Chk Digit

If this parameter is enabled (set to “Y”), it is assumed that the last digit is a check digit.

2 Chk Digits

If this parameter is enabled (set to “Y”), it is assumed that the last two digits are check digits.

Include Chk

If “Include Chk” is enabled (set to “Y”), the check digit is included with the decoded bar code data.

Size/Chars

See “Size/Chars” beginning on page 106.

6.6.3.10 I 2 of 5

```
I 2 of 5
Mod 10 Chk          N
ITF Chk             N
Include Chk         N
Size/Chars          »
```

Mod 10 Chk

If this parameter is enabled (set to “Y”), the Mod 10 check digit is calculated. This calculation is the same as the Code 39 Mod 10 check digit.

ITF Chk

If this parameter is enabled (set to “Y”), the ITF-14/16 Mod10 check digit is calculated.

Include Chk

If this parameter is enabled (set to “Y”), the check digit is included with the decoded bar code data.

Size/Chars

See “Size/Chars” beginning on page 106.

6.6.3.11 MSI/PLESSY

```
MSI/PLESSY
1 Chk Digit         Y
Include Chk         N
Size/Chars          »
```

1 Chk Digit

If this parameter is enabled (set to “Y”), it is assumed that the last digit is a check digit.

Include Chk

If this parameter is enabled (set to “Y”), the check digit is included with the decoded bar code data.

Size/Chars

See “Size/Chars” beginning on page 106.

6.6.3.12 D 2 of 5

```
D 2 of 5
Mod 10 Chk          N
Include Chk         N
Size/Chars          »
```

Mod 10 Chk

If this parameter is enabled (set to “Y”), the Mod 10 check digit is calculated. This calculation is the same as the Code 39 Mod 10 check digit.

Include Chk

If this parameter is enabled (set to “Y”), the check digit is included with the decoded bar code data.

Size/Chars

See “Size/Chars” beginning on page 106.

6.7 Applications

“TESS” and “ANSI” applications require unique names so that several different sessions of “TESS” and “ANSI” can operate simultaneously. The 7035, 8255 and 8260 terminals can support up to 4 sessions at one time.

```
Applications                Range
Name      #1 Widget         see text
Type      #1 ANSI           TESS/ANSI
Settings  #1 »              see text
.
.
.
Name      #4
Type      #4
Settings  #4
```

Important: ***These applications will become active only after the changes made in the Application screen are saved by pressing <F4> – the SAVE key.***

Name And Type

Up to four applications can be entered in this parameter. The “Name #” parameter must be completed with a name that is meaningful to the operator. The “Type #” field indicates the type of session you will be running.

- In a “Name #” field, type a name that is meaningful to the operator.
- The available options for the “Type #” field are TESS and ANSI. Type the appropriate application type in this field using either uppercase, lowercase or a combination.
- To display the “Settings” menu for your application , position the cursor on “Settings”, and press <F1> – the NEXT key.

Note: *Before you can access the “Settings” menu, you must first complete the “Name” and “Type” fields.*

6.7.1 ANSI Settings

Ansi		Range
Terminal #	1	1-1024
Host Conn	»	see text
Screen	»	see text
Char Set	»	see text
Video	»	see text
Transmit	»	see text
Keyboard	»	see text
Serial	»	see text

Each session you create has its own “Settings” parameters. Additional ANSI information is documented in *Chapter 5: ANSI Operations*.

Terminal

For ***every*** application session you create, the terminal number assigned in the “Terminal #” parameter must be non-zero and unique. This parameter defines the terminal number for the ANSI session and uniquely identifies all transmissions to and from the terminal.

Other applications running in the terminal, such as a TESS session or another ANSI session must ***each*** have a different terminal number. In addition, each Teklogix terminal using the radio link must have a unique terminal number.

6.7.1.1 Host Conn

Important: ***This parameter is not available when the terminal is operating with a narrow band radio.***

Host Conn		Range
Conn Type	Telnet	TCP Direct/Telnet
Host		see text
Port	23	0-9999

Conn Type

This parameter allows the operator to choose one of the following types of connections: `TCP Direct` if the terminal is communicating through a controller or an SDK, or `Telnet` if the terminal is communicating directly to the host.

Host

This parameter is used to assign a host IP address using the format ###.###.###.###

Port

"Port" specifies the TCP Direct or Telnet port number. By default, the Telnet port is assigned port number 23. The TCP Direct port is assigned the value 9999.

6.7.1.2 Screen

Screen		Range
Pages	4	0-16
Columns	80	80 or 132
Rows	24	4-60
Auto Wrap	Y	Y/N
Softkeys	»	see text

Pages

This parameter defines how many pages are accessible to application programs. The ANSI control functions, Next Page (NP) and Previous page (PP), are used to select another page. These pages are independent of each other, so that if lines of text scroll off a page, the other pages are unaffected.

There is no error indication from the terminal if the memory required by the selected number and size of pages exceeds the memory available in the terminal.

Columns

This parameter defines the logical page width (in characters) used by the host computer application. Emulator systems trim the host application screens to this width. This page width cannot be smaller than the width of the terminal display. Display panning is used if the page is wider than the display.

Note: *The value in this parameter must be an even number.*

Rows

This parameter defines the logical page length (in lines) used by the host computer application. Emulator systems trim the host application screens to this length. This page length cannot be smaller than the length of the terminal's display. Display panning is used if the page is longer than the display.

Note: *The value in this parameter must be an even number.*

Auto Wrap

If "Auto Wrap" is disabled (set to "N"), characters received when the cursor is at the right edge of the screen replace the previously displayed characters. If "Auto Wrap" is enabled (set to "Y"), the cursor wraps to the next line when the current line is filled. The display scrolls up if the cursor is at the bottom margin.

Softkeys

Note: *This menu uses string entry fields. For detailed information about completing this type of field, refer to "String Entry Parameters" on page 85.*

```
Softkeys
F1
F2
F3
F4
```

Important: ***The sample menu above reflects the 7035 hand-held softkey options. The Softkey menu in the 8255 and 8260 vehicle-mount terminals provides six softkeys – <F1> to <F6>.***

Softkeys are function keys that have been programmed to perform specific actions in your application. These keys are identified through ***softkey labels***, reverse video labels that are displayed at the bottom of the terminal screen. These softkey ***labels*** can be reconfigured using the menu attached to this parameter.

To edit a label:

- Position the cursor in the appropriate function key field within the Softkey menu, and type a new name – preferably one that describes the corresponding key's function.

Note: *Although you can enter up to 8 characters for each softkey label, the text will be shortened to better fit in the available space on your display.*

6.7.1.3 Char Set – North American And European

Important: ***When a character sent from the host cannot be displayed, a right arrow character is used as a substitute.***

```
Char Set
ISO        N »
IBM        Y »
DEC        N »
```

Note: *For details on Chinese and Korean character sets, refer to "Char Set – Chinese And Korean" on page 121 for details.*

This menu contains all the character sets available with your Teklogix terminal.

To choose a character set:

- Position the cursor on the character set you want to use, and press the <RIGHT> or <LEFT> arrow key to set it to "Y".

Once you've chosen and enabled (set to "Y") a particular character set, you'll need to choose from the sub-menu attached to that character set.

- Press <F1> to display the character set options.
- To enable a character set option, press the <RIGHT> or <LEFT> arrow key to set it to "Y"

ISO Options

```
ISO
ISO 8859-1        N
ISO 646 ASCII     N
```

IBM Options

```
IBM
EBCDIC          N »
Other           Y »
```

```
EBCDIC
5250 Multin'l     N
IBM 037           N
IBM 256           N
IBM 237           N
IBM 871           N
IBM 875           N
Belgium           N
Brazil            N
British           N
Danish/Norway     N
Finnish/Swed.     N
French            N
French Cdn.       N
Italian           N
Portugal          N
Spain             N
Spanish           N
```

```
Other
IBM PC 437        N
IBM PC 850        Y
```

DEC Options

```
DEC
VT220 British     N
VT220 Danish      N
VT220 Finnish     N
VT220 French      N
VT220 Fr. Cdn.    N
VT220 German      N
VT220 Italian     N
VT330 Portugal    N
VT330 Spanish     N
VT220 Swedish     N
Graphical         N
Multinational     N
```

6.7.1.4 Char Set – Chinese And Korean

Important: ***If you are using a Chinese character set and a character sent from the host cannot be displayed on the terminal screen, a shaded box character is used as a substitute.***

If you are using a Korean character set, a right arrow character is used as a substitute.

Note: *Refer to "Char Set – North American And European" beginning on page 119 for details about selecting character sets.*

Chinese Character Sets

```
Char Set
ISO        N »
IBM        Y »
Misc       N »
```

```
ISO
ISO 646 ASCII
```

```
IBM
Chinese
```

```
Misc
Big 5
```

Korean Character Sets

```
Char Set
ISO        N »
IBM        Y »
Misc       N »
```

```
ISO
ISO 646 ASCII
```

```
IBM
Korean
Korean Int
```

```
Misc
Fujitsu Korean
KSC 5601
```

6.7.1.5 Video

Video		Range
Bold	NONE	see text
Blink	BLNK	see text
Reverse	REV	see text
Underline	ULIN	see text

Bold

The value assigned to this parameter specifies the actual video attributes to be assigned to fields created with the “Bold” ANSI attribute – that is, “BLNK” (blink), “ULIN” (underline), “REV” (reverse) or “NONE” (normal).

Blink

The value assigned to this parameter specifies the actual video attributes to be assigned to fields created with the “Blink” ANSI attribute – that is, “BLNK” (blink), “ULIN” (underline), “REV” (reverse) or “NONE” (normal).

Reverse

The value assigned to the “Reverse” parameter specifies the actual video attributes to be assigned to fields created with the “Reverse” ANSI attribute – that is, “BLNK” (blink), “ULIN” (underline), “REV” (reverse) or “NONE” (normal).

Underline

The value assigned to this parameter specifies the actual video attributes to be assigned to fields created with the “Underline” ANSI attribute – that is, “BLNK” (blink), “ULIN” (underline), “REV” (reverse) or “NONE” (normal).

6.7.1.6 Transmit

Transmit	Range
Xmit Count	0-99
Xmit Wait	0-999
Dev Attr	see text
Auto-Ans	see text

Xmit Count

This parameter determines how many characters from the keyboard or scanner are buffered by the terminal before being transmitted to the host. If 0 (zero) is selected, the terminal transmits only according to the “Xmit Wait” parameter. If the ANSI block mode features are used, this parameter should be set to 99.

Note: *If the terminal is not in local edit mode, the* <ENTER>*, arrow,* <CTRL>*, and function keys cause an immediate radio transmission regardless of the “Xmit Count” parameter setting.*

Xmit Wait

This parameter determines the length of time the terminal collects keystrokes before transmitting them to the host. This value is specified in increments of one 10th of a second (i.e., a value of 10 represents 1 second). If 0 (zero) is selected, the terminal transmits only according to the “Xmit Count” parameter.

Note: *If the terminal is not in local edit mode, the* <ENTER>*, arrow,* <CTRL>*, and function keys cause an immediate radio transmission regardless of the “Xmit Wait” parameter setting.*

Dev Attr

This parameter specifies a device attribute string. This string can be up to 39 characters long. The terminal sends this string to the host when it receives a DA or DECID control. Whether or not this parameter is set is dependent on the requirements of the host computer.

Auto-Ans

This string can be up to 39 characters long and is sent by the terminal as a reply to an “ENQ” character from the host. The “Auto-Answer” string is programmable in the same manner as the keyboard macros. For example, this string can be used to automatically send the user name and password when logging into the host. Refer to "String Entry Parameters" on page 85 to 86 for detailed information.

6.7.1.7 Keyboard

Keyboard		Range
Newline	N	Y/N
Echo Mode	Smart	Smart, Local, Host
DEL Key	BS	BS, DEL

Newline

When this parameter is disabled (set to “N”), a LF character received from the host causes the cursor to move down one line in the same column. In addition, the <ENTER> key transmits a CR. When enabled (set to “Y”), an LF character received from the host causes the cursor to move to the first column of the next line. The <ENTER> key transmits both a CR and an LF.

Echo Mode

The available echo modes are:

Smart: This mode reduces or eliminates the delay between typing a character on the keyboard and displaying the character echoed by the host computer. The terminal displays all printable characters on the screen before sending them to the host. The terminal compares the characters echoed by the host to the characters placed on the page and alters the display if the host echoes are different.

The maximum number of characters waiting for echo is 25. Any additional characters are sent to the host but are not displayed. When the terminal is in *insert* mode, smart echo is disabled.

Important: ***To suspend Smart echo mode if, for example, you are entering a password, press <ALT> and type ‘.’ (period). Characters will be replaced with a series of periods until you press the <ENTER> key.***

Local: In this mode, any character entered using the keyboard is displayed before being sent to the host. Certain keys cause additional action at the terminal, as shown in Table 6.2 on page 125.

Host: In this mode, the terminal sends all keyboard entries to the host and displays only data received from the host.

Key	Function
ENTER	In *Newline* mode, this key moves the cursor to the first column of the next line. In *line feed* mode, this key moves the cursor to column one of the current line.
CTRL-G (Bell)	The terminal beeps.
CTRL-H (Backspace)	The cursor moves back one space.
CTRL-I (Tab)	The cursor moves to the next horizontal tab stop.
CTRL-J (Line Feed) CTRL-L (Form Feed)	The cursor moves down one line in the same column.
CTRL-K (Vertical Tab)	The cursor moves down to the next line with a vertical tab set.
DEL	This key deletes the character to the left of the cursor and moves the cursor to the left by one position.

Table 6.2 Function Of Special Keys In Local Echo Mode

DEL Key

This parameter determines which character is sent to the host – DEL (delete) or BS (backspace). The host interprets how it will respond to the code. The selection made at this parameter ***does not*** affect how the <DEL> key operates at the terminal.

6.7.2 Serial

Serial		Range
Async In	N	Y/N
Start	0	0-255
End	0	0-255

Async In

When this parameter is enabled (set to “Y”), the serial (async) port is ready to receive input at all times.

Start/End

The start character is added to the beginning of the data received from the serial (asynch) port. The end character is added to the end of the data received.

6.7.3 TESS Settings

TESS		Range
Terminal #	1	see text
Host Conn	»	see text
Screen	»	see text
Characters	»	see text
Serial	»	see text
Tests	»	see text
Scanner	»	see text
Fields	»	see text
Features	»	see text

Each session you create has its own “Settings” parameters. Additional ANSI information is documented in *Chapter 4: TESS Operations*.

Terminal

For ***every*** application session you create, the terminal number assigned in the “Terminal #” parameter must be non-zero and unique. This parameter defines the terminal number for the TESS session and uniquely identifies all transmissions to and from the terminal.

Other applications running in the terminal, such as an ANSI session or another TESS session must ***each*** have a different terminal number. In addition, each Teklogix terminal using the radio link must have a unique terminal number.

6.7.3.1 Host Conn

Important: ***This parameter is not available when the terminal is operating with a narrow band radio.***

Host Conn		Range
Host		see text
Port	23	0-9999

Host

This parameter is used to assign a host IP address using the format ###.###.###.###

Port

"Port" specifies the TCP Direct port number. By default, the TCP Direct port is assigned the value 9999.

6.7.3.2 Screen

Screen		Range
Columns	80	20..132
Rows	24	4..100
Origin Scroll	N	Y/N
Field Scroll	N	Y/N
Pages Saved	16	1..16
App. Parameter	-1	-1..79
Softkeys	»	see text

Columns

This parameter defines the logical page width (in characters) used by the host computer application. Emulator systems trim the host application screens to this width. This page width cannot be smaller than the width of the terminal display. Display panning is used if the page is wider than the display.

Note: *The value in this parameter must be an even number.*

Rows

This parameter defines the logical page length (in lines) used by the host computer application. Emulator systems trim the host application screens to this length. This page length cannot be smaller than the length of the terminal's display. Display panning is used if the page is longer than the display.

Note: *The value in this parameter must be an even number.*

Origin Scroll

When enabled (set to "Y"), the display window moves to the origin (upper-left corner) after "LOCK-H" or "LOCK-B" messages.

Field Scroll

When enabled (set to "Y"), the display window moves to the left after entering a new entry field.

Pages Saved

This parameter determines the number of pages that can be stored and recalled at the terminal. Storing frequently used page data at the terminal reduces the need for the host to retransmit complete page data over the radio link. Retransmitting data can reduce the system response time. Increasing the number of saved pages decreases the available memory for other functions.

App. Parameter

The "Application" parameter is sent to the host system as part of the response to the TESS query command. Enter zero if this parameter is not used.

Softkeys

Note: *This menu uses string entry fields. For detailed information about completing this type of field, refer to "String Entry Parameters" on page 85.*

```
Softkeys
F1
F2
F3
F4
```

Important: ***The sample menu above reflects the 7035 hand-held softkey options. The Softkey menu in the 8255 and 8260 vehicle-mount terminals provides six softkeys – <F1> to <F6>.***

Softkeys are function keys that have been programmed to perform specific actions in your application. These keys are identified through ***softkey labels***, reverse video labels that are displayed at the bottom of the terminal screen. These softkey ***labels*** can be reconfigured using the menu attached to this parameter.

To edit a label:

- Position the cursor in the appropriate function key field within the Softkey menu, and type a new name – preferably one that describes the corresponding key's function.

Note: *Although you can enter up to 8 characters for each softkey label, the text will be shortened to better fit in the available space on your display.*

6.7.3.3 Characters

Characters		Range
Invis.	42	0-255
NULL	46	0-255
Char Set	»	see text
Err Func Key	0	0-255
V Match Char	0	0-255
H Match Char	0	0-255
Upper Case	N	Y/N

Invis

In TESS applications, some fields may be set as “invisible” or “non-display” fields. This parameter determines the character that will mask the actual text typed. For example, this feature is often used in password entry fields where the actual text typed is replaced by asterisks.

* (asterisk)	The ASCII equivalent for this character is 42.

NULL

This parameter specifies the character that identifies empty entry fields. (Note that positions containing spaces are not considered empty.) Enter the ASCII equivalent of this character. The most commonly used characters are:

_ (underline)	The ASCII equivalent for this character is 95.
. (period)	The ASCII equivalent for this character is 46.

6.7.3.4 Char Set

```
Char
ISO        N »
IBM        Y »
DEC        N »
```

This menu contains all the character sets available within TESS:

- Position the cursor on the character set you want to use, and press the <RIGHT> or <LEFT> arrow key to set it to “Y”.
- Once you’ve enabled (set to “Y”) a particular character set, you’ll need to choose from the sub-menu attached to that character set.
- Press <F1> to display the character set options.
- To enable a character set option, press the <RIGHT> or <LEFT> arrow key to set it to “Y”

ISO Options

```
ISO
ISO 8859-1       N
ISO 646 ASCII    N
```

IBM Options

```
IBM
EBCDIC          N »
Other           Y »
```

```
EBCDIC
5250 Multin'l     N
IBM 037           N
IBM 256           N
IBM 237           N
IBM 871           N
IBM 875           N
Belgium           N
Brazil            N
British           N
Danish/Norway     N
Finnish/Swed.     N
French            N
French Cdn.       N
Italian           N
Portugal          N
Spain             N
Spanish           N
```

```
Other
IBM PC 437        N
IBM PC 850        Y
```

DEC Options

```
DEC
VT220 British     N
VT220 Danish      N
VT220 Finnish     N
VT220 French      N
VT220 Fr. Cdn.    N
VT220 German      N
VT220 Italian     N
VT330 Portugal    N
VT330 Spanish     N
VT220 Swedish     N
Graphical         N
Multinational     N
```

Err Func key

This parameter defines the function key that interrupts the normal sequence of a terminal and causes an Error Reply message to be returned to the host. Enter the number of the function key to be used as the Error function key (e.g., “1” for function key 1).

This parameter should be set to zero unless there is a system requirement for Error Reply messages. When the Error function key is entered, the terminal abandons all queued procedures and TESS commands and returns an Error Reply message, with a milestone, to the host. The host must respond with a milestone acknowledge before the terminal accepts further TESS commands.

V Match Chr

This parameter enables visible field matching and defines the character that identifies visible field match data from the host. Field matching allows the host to pre-load data into an entry field that is compared with the user’s input. The terminal beeps if the entered data does not match. Visible field matching means that the data to be matched is displayed in the entry field.

Enter the decimal value for the ASCII character that will be used by the host to identify visible match field data. Enter 0 (zero) to disable this feature.

Note: *Another method of field matching is available directly through the TESS data stream.*

H Match Chr

This parameter enables hidden field matching and defines the character that identifies hidden field match data from the host. Field matching allows the host to pre-load data into an entry field that is compared with the user’s input. The terminal beeps if the entered data does not match. Hidden field matching means that the data to be matched is not displayed in the entry field.

Enter the decimal value for the ASCII character that will be used by the host to identify hidden match field data. Enter 0 (zero) to disable this feature.

Note: *Another method of field matching is available directly through the TESS data stream.*

Upper Case

When this parameter is set to “Y”, lowercase input is converted to uppercase.

6.7.3.5 Serial

Serial		Range
In	N	Y/N
Prefix	10	0-255
Suffix	13	0-255
Out	Y	Y/N
Prefix	10	0-255
Suffix	13	0-255

Note: *This menu uses "string entry" parameters. For detailed information about entering data in this type of parameter, refer to "String Entry Parameters" on page 85.*

In

This parameter enables the serial port input fields. If enabled (set to "Y"), the TESS application has exclusive use of the serial port. Data entered in these fields must begin with a line feed and end with a carriage return.

Prefix

This parameter determines the start-of-message character on serial input. A value of "0" (zero) indicates no prefix. Enter an ASCII numeric equivalent to represent the start character.

Suffix

This parameter determines the end-of-message character on serial input. A value of "0" (zero) indicates no suffix. Enter an ASCII numeric equivalent to represent the end character.

Out

This parameter enables serial port output fields.

Prefix

This parameter determines the start-of-message character on serial output. A value of "0" (zero) indicates no prefix. Enter an ASCII numeric equivalent to represent the start character.

Suffix

This parameter determines the end-of-message character on serial output. A value of “0” (zero) indicates no suffix. Enter an ASCII numeric equivalent to represent the end character.

6.7.3.6 Tests

Tests		Range
AutoRep Fn	1	1-36
AutoRep T/O	0	0-255

AutoRep Fn

This parameter determines which function key is sent to the host in auto reply mode. The value represents the number of the function key – not the ASCII decimal equivalent. After sending this key, the terminal locks and waits for the host to unlock the terminal. To disable “AutoRep Fn”, set the “AutoRep T/O” parameter to zero.

AutoRep T/O

This parameter determines the time (in seconds) between the terminal unlocking and the next transmission of the function key specified by the “AutoRep Fn” parameter. A value of zero disables auto reply mode.

6.7.3.7 Scanner

Scanner		Range
ContNxtField	Y	Y/N
Append Enter	Y	Y/N
Append F0	Y	Y/N
Mixed AIAG	N	Y/N
Rjct if Alpha	N	Y/N
Beam Lockout	N	Y/N

ContNxtField

This parameter only applies to string entry data. When enabled (set to “Y”), this parameter allows bar codes that are longer than the field length to continue in the next field.

If “ContNxtField” is disabled (set to “N”) OFF data will flow into the next field.

Append Enter

When enabled (set to “Y”), “Append Enter” causes an <ENTER> code to be appended to the bar code. The <ENTER> code completes the entry of the bar code and moves the cursor to the next field.

Append F0

When enabled (set to “Y”), this parameter causes an <F0> code to be appended to the bar code. The <F0> code completes the entry of the bar code data in the field.

Mixed AIAG

When this parameter is enabled (set to “Y”), AIAG labels are always accepted and processed – even if mixed with keyboard input. The AIAG label can replace the partially entered keyboard data. If this parameter is disabled, AIAG labels are rejected if field entry is in progress.

Rjct if Alpha

When the cursor is in a numeric field and “Rjct if Alpha” is enabled (set to “Y”), bar codes containing alphabetic characters are rejected.

Beam Lockout

When enabled (set to “Y”), this parameter disallows scanner use when the current session is in “LOCK-H” mode.

6.7.3.8 Fields

Fields		Range
Field Order	Y	Y/N
Enter To F0	Y	Y/N
Enter On Arr	Y	Y/N
Entry Mode	field	see text
Open Fky Only	N	Y/N
Video	»	see text
All Fld Video	Y	Y/N
Ign Bcode_fld	N	Y/N
Enh Edit Mode	N	Y/N

Field Order

This parameter determines the mode of cursor movement between fields. The *next* field can be defined by location on the screen or by the assignment of field numbers. When enabled (set to “Y”), the cursor moves according to field location. If disabled (set to “N”), the cursor moves according to the numeric order of the fields.

Enter To F0

The <ENTER> key normally enters data into a field and moves the cursor to the next field. However, some applications require that the <ENTER> key start a transmission from the terminal. When enabled (set to “Y”), this parameter causes the <ENTER> key to be interpreted as <F0> which starts a transmission.

Enter On Arr

When this parameter is enabled (set to “Y”), the arrow keys can be used to complete data entry into a field.

Entry Mode

“Entry Mode” parameters allow you to select a data entry mode. The modes are: insert, replace, field and fcursor. “TESS Edit Modes And Cursor Movement” on page 65 describes these modes in detail.

Open Fky Only

When this parameter is enabled (set to “Y”), the screen is open for function keys only, and the cursor is not positioned. When this parameter is disabled, the screen is open for data entry, and the cursor is placed in the first field (if it exists).

Video

Video		Range
Bold	NONE	see text
Blink	BLNK	see text
Reverse	REV	see text

Bold

The value assigned to this parameter specifies the actual video attributes to be assigned to fields created with the “Bold” ANSI attribute – that is, “BLNK” (blink), “ULIN” (underline), “REV” (reverse) or “NONE” (normal).

Blink

The value assigned to this parameter specifies the actual video attributes to be assigned to fields created with the “Blink” ANSI attribute – that is, “BLNK” (blink), “ULIN” (underline), “REV” (reverse) or “NONE” (normal).

Reverse

The value assigned to the “Reverse” parameter specifies the actual video attributes to be assigned to fields created with the “Reverse” ANSI attribute – that is, “BLNK” (blink), “ULIN” (underline), “REV” (reverse) or “NONE” (normal).

All Fld Video

Usually, the video attributes apply only to the text that is in an entry field. When this parameter is enabled (set to “Y”), the entire field (including blanks) takes on the video attributes. Some systems use this option to identify empty entry fields with reverse video.

Ign Bcode_fld

When this parameter is enabled (set to “Y”), fields that were defined as “bar code only” accept data from the keyboard as well as the bar code reader. In effect, they behave as data entry fields.

Enh Edit Mode

This mode provides extended (enhanced) functionality to users of Teklogix' IBM 5250 terminal emulation. When this parameter is enabled (set to "Y"), the arrow keys move the cursor anywhere on the screen, unrestricted by fixed or entry fields. Table 6.3 describes the cursor movement when an arrow key is pressed in conjunction with the <SHIFT> key.

Key Function	Key Sequence	Cursor Movement
Field Advance or Tab	<SHIFT> <RIGHT> arrow key	Cursor moves to the first position in the next input field. If already in the last field, the cursor moves to the first input field on the screen.
Field Backspace	<SHIFT> <LEFT> arrow key	Cursor moves to the beginning of the current field. If already in the first position, the cursor moves to beginning of the previous field.
Field Exit	<SHIFT> <DOWN> arrow key	Current field is cleared, and the cursor moves to the next input field.
Home	<SHIFT> <UP> arrow key	Cursor moves to the first input field on the screen.

Table 6.3 Enhanced Edit Mode Cursor Key Operation

6.7.4 Features

Features		Range
Kbd Locked	N	Y/N

Kbd Locked

This parameter allows you to lock (set to "Y") or unlock (set to "N") the keyboard for all alphanumeric input in TESS. When the keyboard is locked, the Function keys, arrow keys and the <ENTER> key are still functional. The terminal emits an error beep if a character is rejected because the keyboard is locked. Changes to this parameter take effect only after the terminal is reset.

6.8 View Manager

View Manager		Range
Anchor View	N	Y/N
X-origin	1	1-80
Y-origin	1	1-24
Use Increment	N	Y/N
X-increment	5	1-40
Y-increment	5	1-12
Display Shift	Y	Y/N
Custom Chars	»	see text

Anchor View

When enabled (set to “Y”), this parameter locks the display at a defined location on the screen, preventing it from shifting when the cursor is moved. The “X-origin” and “Y-origin” coordinates specify where the screen origin, the upper-left corner of the screen, will be fixed.

X-origin And Y-origin

The “X-origin” parameter is used to specify the column to which the upper left corner of the screen will be anchored. The “Y-origin” parameter is used to specify the row coordinate to which the screen will be anchored.

Use increment

When “Use increment” is enabled (set to “Y”) and the cursor is moved off the display, the screen contents shift by the values specified in the “X-increment” and “Y-increment” parameters.

X-increment

This parameter determines the number of spaces the screen shifts once the cursor moves out of view. The value assigned here doesn’t take effect until “Use Increment” is set to “Y”.

Y-increment

This parameter determines the number of spaces the screen shifts once the cursor moves out of view. The value assigned here doesn’t take effect until “Use Increment” is set to “Y”.

Display Shift

If this parameter is enabled (set to “Y”), the display in application screens shifts so that there are no blank columns on the left-most side of the display.

Custom Chars

```
Custom Chars          Range
Char        nn        0-255
•
•
•
Char        nn        0-255
```

This parameter is used to create a list of characters (to a maximum of 20 characters) that are not normally available directly from the keyboard.

To create a character:

- Type the decimal equivalent of the character you want to create. You can look up the decimal value in the code page you selected using the "Code Page" parameter (see page 95).

Note: *If the character you select does not exist in the host character set, it cannot be sent to the host application.*

Once you’ve created this list of characters, you can access the list from within a TESS or ANSI session as follows:

- Press <ALT> *a* to display your list of custom characters.
- Use the <RIGHT> or <LEFT> arrow key to highlight the character you require, and press <ENTER> to select it.

6.9 Ports– Serial 1 And Console 2

```
Ports
Serial 1          Print
Parameters        »
Console 2         Disable
Parameters        »
```

6.9.1 Serial 1 And Console 2 Peripheral Options

The “Serial 1” (COM1) and “Console 2” (COM2) options allow you to enable, disable and specify the accessories attached to these ports. For the “Serial 1” port, the possible values are: `Disable Enable Print Scanner` and `Output`. For the “Console 2” port, the possible values for this parameter are: `Disable Enable Print Scanner` and `Scan-See and Nomad`.

To scroll through the options for each port:

- Press the <RIGHT> or <LEFT> arrow key.

Important: ***If you choose Disable, the corresponding port parameters will not take effect.***

These ports operate differently depending on the accessories selected.

- “Print” – all TESS print operations are directed to the port. All ANSI media copy operations to the “primary port” are directed to this port.
- “Scanner” – TESS and ANSI accept scanner input from the port.
- “Scan-See” – TESS and ANSI accepts input from the Scan-See through the Console 2 port. (This option is ***not*** available for the Serial 1 port.)
- “Nomad” – TESS and ANSI accepts input from the Nomad scanner through the Console 2 port. (This option is ***not*** available for the Serial 1 port.)
- “Output” – the TESS pass-through operations and serial output fields are directed to the Serial 1 port. (This option is ***not*** available for the Console 2 port.)

6.9.2 Serial 1 And Console 2 Parameter Settings

Since the parameters for the “Serial 1” and “Console 2” ports are identical in most cases, they are discussed in one section. Any differences are clearly indicated.

Important: ***The most significant difference between the “Serial 1” and “Console 2” port parameters is that the ScanSee menu is only available in the Console 2 “Parameters” menu.***

Console 2		Range
Speed	9600	1200 2400 4800 9600
Data Bits	8	7-8
Parity	None	None Odd Even
Stop Bits	1	1-2
Flow Control	None	None CTS/RTS XON/XOFF
Buffer	512	32-2048
Retries	3	1-100
Input Tmo	2	0-100
Test	Y	Y/N
ScanSee	»	see text

Speed

This parameter determines the bit rate of the port.

Data Bits

This parameter determines the number of bits for the data going through this port.

Parity

This parameter determines the type of parity checking used on the data going through the port. The options are Odd, Even and None.

Stop Bits

This parameter specifies the number of stop bits – 1 or 2 – used for asynchronous communication.

Flow Control

Important: ***Flow Control is <u>not</u> available for Console 2.***

This parameter selects the type of flow control used in your terminal. The 7035 can perform XON/XOFF and/or CTS/RTS handshaking. Note that RTS/CTS hardware flow control generally results in faster data throughput.

The function of each mode is as follows:

Enable: Used to input and output data.
Supports XON/XOFF and/or CTS/RTS or no handshaking

Print: Used to output data only. All input characters ***except*** XON and XOFF are ignored.
Supports XON/XOFF and/or CTS/RTS or no handshaking.

Output: Used to output data only. All input characters are ignored.
Supports CTS/RTS or no handshaking

Note: *To enable the input and/or output, 'serial in' and/or 'serial out' must be enabled in the TESS menu.*

Buffer

The value assigned to this parameter determines the size of the serial buffer used by the application for both input and output. The buffer controls how much data the application can send to or receive from a serial device.

Retries

Note: *"Retries" is not available if "Nomad" is chosen as the peripheral device.*

This parameter determines the number of times the terminal attempts to transmit a byte from the serial port. If the count specified in this parameter is exceeded, the transmission fails.

Input Tmo

This parameter sets the time in tenths of a second that the terminal waits before passing received data to the TESS or ANSI tasks.

Test

When this parameter is enabled (set to "Y"), data is output through the serial port to make certain that it is operating appropriately.

6.9.3 Setting The Terminal Console Port For Nomad

To interface the terminal to the Nomad scanner, "Console 2" must be configured for `Nomad`. For detailed information about configuring the Nomad scanner, refer to the *"LS3070™ Wireless Scanner User Manual"* – P.N. 80416.A

6.9.4 Setting The Terminal Console Port For Scan-See

Warning: ***ALWAYS DISCONNECT THE SCAN-SEE FROM THE TERMINAL BEFORE A TERMINAL RESET! Resetting the terminal with the Scan-See connected to it may cause it to "hang" and boot up improperly.***

In order for the terminal to interface to the Scan-See, the console port should be set as follows:

```
Speed      = 9600 baud
# of bits  = 7
Parity     = none
2stop bits = Y
Test       = N
```

Note: *In order for the terminal to interface to Scan-See units with older firmware (serial numbers lower than 1594120224), set "Parity=space"; all other parameters are identical to the newer firmware.*

6.9.4.1 Scan-See Parameters

Note: *Scan-Sees equipped with an LED screen have 10 column displays. The newer Scan-Sees with LCDs have 20 column displays.*

6.9.4.2 Model 7000 Settings — Defaults & Allowable Ranges

04 = Scan-See	Default Setting Model 7000 30106-001	Range
Anchor Line	1	0...1
Anchor Column	9	0...19
Follow Cursor	Y	Y/N
Line Offset	0	-25...25
Column Offset	-1	-80...80
Wraparound	N	Y/N
Panning	Y	Y/N
Line Scrolling	N	Y/N
Brightness	3	0 to 5
Arrows	Bright	Bright Horz Vert
Version	0 or 1	0...3 (see pg 149 for details)
XON/XOFF	Y	Y/N

6.9.4.3 Model 7000M Settings — Defaults & Allowable Ranges

04 = Scan-See	Default Setting Model 7000M 30107-001	Range
Anchor Line	1	0...1
Anchor Column	19	0...19
Follow Cursor	Y	Y/N
Line Offset	0	-25...25
Column Offset	-1	-80...80
Wraparound	N	Y/N
Panning	Y	Y/N
Line Scrolling	N	Y/N
Brightness	n/a	0 to 5
Arrows	Vert	Bright Horz Vert
Version	2 or 3	0...3 (see pg 149 for details)
XON/XOFF	Y	Y/N

6.9.4.4 Scan-See Display — Mapping The "Viewport"

The Scan-See display is mapped to a specific area on the terminal screen called the “Scan-See viewport” and is continuously updated to reflect that portion of the screen. The Scan-See viewport is defined as follows:

Anchor Line/Anchor Column

A location on the Scan-See display – the *anchor* – is chosen as a reference point.

Important: ***The range for this parameter varies depending on the type of Scan-See you are using.***

If you are using a Scan-See with a 10 column LED , the range for this parameter is `0` to `9`. If you are using a Scan-See equipped with a 20 column LCD, the range for this parameter is `0` to `19`.

Line Offset/Column Offset

A predefined displacement – the *offset* – is added to the location of the terminal cursor to give us a point – the *pivot*. This pivot is mapped to the *anchor*, and whatever is displayed in its vicinity is also displayed on the Scan-See. For example:

- The *anchor* is chosen as **(9,0)** where "**9**" is the column and "**0**" is the line (on the Scan-See display).
- The *offset* is chosen as **(4,2).**
- The cursor on the terminal is currently located at **(7,5).**
- The *pivot* would thus be located at **(7+4, 5+2)** or **(11,7).**
- The area displayed on the Scan-See will be:
  (11–9,7–0) to **(11–9+9,7–0+1)** or **(2,7)** to **(11,8)**.[1]

[1] These computations assume "Wraparound" (see page 148) is disabled, and "Follow Cursor" is enabled.

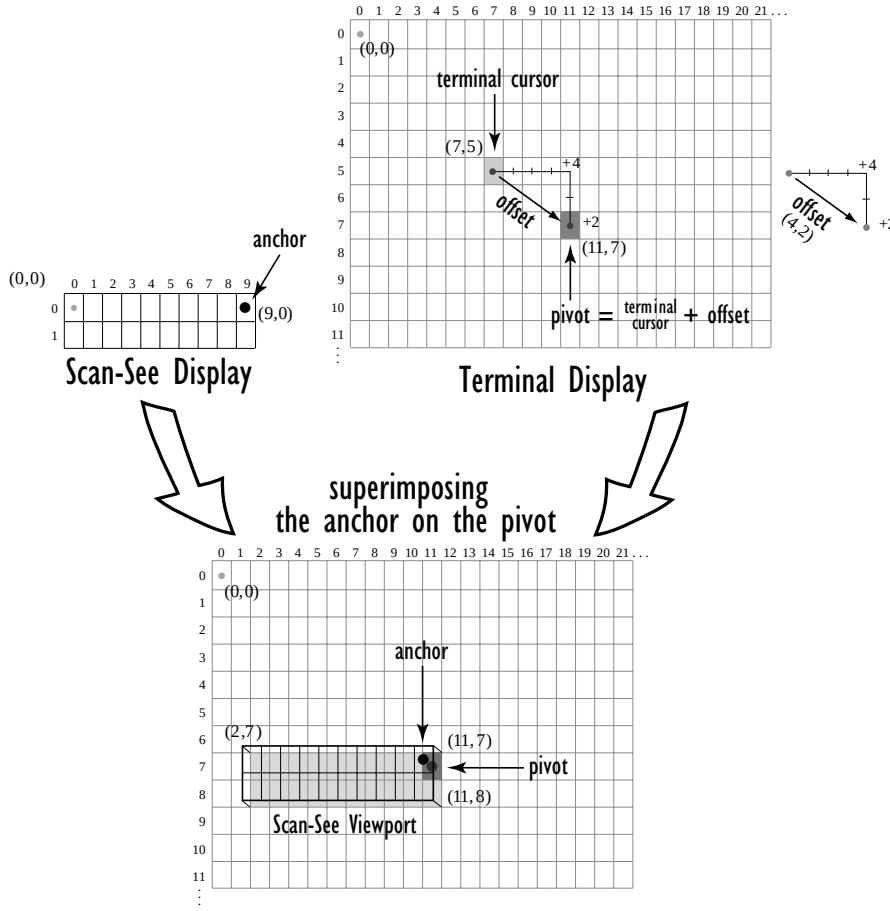

Figure 6.1 Scan-See Viewport

Note: *To enter negative values, press the "-" (minus) key, and then the number you want to use.*

The <LEFT> arrow key can also be used to decrement the value in the parameter. Each time the <LEFT> arrow is pressed, the number is decremented by one. For example, to enter a value of "–5", start from zero, and press the <LEFT> arrow five times.

Follow Cursor

When the “Follow Cursor” parameter is disabled (set to “N”), it is always assumed that the cursor is located at the origin.

Using the previous example:

- the area displayed will be **(4–9,2–0)** to **(4–9+9, 2–0+1)**, or, after clipping values that are negative or higher than 80: **(0,2)** to **(4,3)**.

Wraparound

When “Wraparound” is enabled (set to “Y”), the Scan-See display is treated as a 1 line by 20 column display rather than a 2 line by 10 column display. Keep in mind that new Scan-Sees equipped with LCDs have 20 column displays.

Panning

If “Panning” is disabled (set to “N”), when the cursor moves one position to the right and the *pivot* is still inside the Scan-See display, the Scan-See viewport does not move. The Scan-See display is updated to reflect the changes within that viewport. If the *pivot* goes outside the viewport, or if the terminal display changes without the cursor being moved, the viewport is re-synchronized to coincide the *pivot* with the *anchor*.

Line Scrolling

When “Line Scrolling” is enabled (set to “Y”), the Scan-See display is treated as two separate 1 line by 10 column displays. The top line always displays the previous value of the bottom line, so in an application where the cursor skips from one entry field to another, the field that was just entered is shown on the top line, and the field to be entered is shown at the bottom.

Note: *When this feature is enabled (set to “Y”), the “Panning” option should be disabled to prevent updates to both lines after every keystroke*

Brightness

The “Brightness” parameter controls the backlight brightness of the display. It only has an effect on Model 7000 Scan-Sees – scanners equipped with LED (light emitting diode) displays.

Arrows

The “Arrows” parameter assigns one of three possible functions to the two arrow keys on the Scan-See keyboard:

Value	Function
“Bright”	Arrow keys control Scan-See display brightness
“Horiz”	Arrow keys control “Column Offset”
“Vert”	Arrow keys control “Line Offset”

Table 6.4 Functions Of The Arrows Parameter

Note: *For “Horiz” and “Vert,” changing the offset takes effect only after the terminal display has been updated.*

Version

Scan-See units with serial numbers that read 1594120224 or higher contain firmware that implements a different communication protocol with the terminal than older units. The “Version” numbers represent the following unit versions:

Value	Scan-See Version
0	First LED version – up to serial number 1594080275. These are encased in grey plastic.
1	Corresponds to Model 7000 LED units – versions after the serial number above. These are also encased in grey plastic.
2	Corresponds to the Metrologic 7000M LCD units. These are encased in grey plastic.
3	Corresponds to the current 7000M LCD units all of which are encased in black plastic.

Table 6.5 Scan-See Versions

Note: *To interface the terminal to the Scan-See units with older firmware (serial number lower than 1594120224), set “Parity = space”; all other parameters are identical to the newer firmware.*

Refer to the *Scan-See User Manual* (P.N. 80408.C) for more information about installing and using the Scan-See.

XON/XOFF

Important: ***IF YOU ARE USING TRANSCEIVERS WITH YOUR SCAN-SEE, this parameter must be set to "Y".***

When set to "Y", the XON and XOFF characters are *not* passed to the TESS or ANSI tasks. A received XOFF character stops the serial port from transmitting. A received XON character starts the serial port transmissions again.

6.10 Global Macros

A macro has 19 programmable characters (or "positions"). The macro keys can be programmed to replace frequently used keystrokes, along with the function of executable keys like <ENTER>, <DEL>, function keys and arrow keys. They may also be used to provide characters not normally accessed from the keyboard.

The methods used to create macros are described in this section.

6.10.1 Displaying The Global Macros Menu

Macros are programmed from within the "Global Macros" menu. If the Tekterm application is currently active:

- **8255/8260:** – Press <ALT> and type *x* to exit the Tekterm application.
- **7035**: Press <ORANGE> <ALT> before typing *x*.

The "Display Menu" appears on the terminal screen.

```
01 Display Menu
A   Parameters
B   Emulations
C   DOS Prompt
```

To display the "Parameters" menu:

- **8255/8260:** –Type the letter *a*.
- **7035**: Press <ORANGE> before typing *a*.

- Type your password in the Password window, and press <ENTER>.

```
Parameters
System          »
Scanner         »
Applications    »
View Manager    »
Ports           »
Global Macros   »
Network         »
Radio           »
Sound           »
```

6.10.2 Displaying The Global Macros Table

To display the "Global Macros" table:

- From the "Parameters" menu, position the cursor on the "Global Macros" option, and press <F1> to display the macro table.

Note: *This is a sample **7035** macro table. Vehicle-mount terminals displays 12 macro fields rather than 4.*

```
Global Macros
#1
#2
#3
#4
```

- Position the cursor in the macro field corresponding to the macro key to which you want to assign macros – #1 corresponds to macro key <M1>, #2 corresponds to macro key <M2>, and so on.

Once the cursor is in a macro field, you have a number of options when creating a macro. You can type text and numbers, choose from a set of ASCII characters and program the function of special keys into a macro.

In macros, the <UP> arrow, <DOWN> arrow, <ENTER> and <DEL> keys have the following functions:

- Pressing the <UP> and <DOWN> arrow keys move the cursor between entry fields.
- Pressing the <ENTER> key once moves the cursor to the first position in the entry field; pressing <ENTER> a second time completes the entry field, exits the sub-menu and returns the cursor to the "parent" or previous menu.
- The <DEL> key deletes the character to the left of the cursor.
- The <CLR> key – <BLUE> <DEL> – clears the entire field. If the last character in a field is deleted, the previous contents, if any, reappear.

6.10.3 Choosing An ASCII Character

Important: Make sure the <CTRL> and <SHIFT> keys are turned off!

By pressing either the <RIGHT> or <LEFT> arrow key, you can cycle through a set of printable characters not available on the keyboard. The sample below is a set of ASCII characters not accessible from the keyboard.

7035: / < > % ^ & ` ~ | [ ] { } " ' ? = + ;
8255/8260: ^ & ‘ ~ | [ ] { } ’ "

- Press the <RIGHT> arrow to display the next character in this sequence, and the <LEFT> arrow to display the previous one.

6.10.4 Adding Additional ASCII Characters

When you've chosen an ASCII character and want to add another one in the same field, the cursor must be moved to the right of the existing character. Normally, pressing the <RIGHT> arrow key moves the cursor to the right, but in a string entry field, pressing the <RIGHT> arrow key cycles through the available ASCII characters instead. **If you've already chosen an ASCII character** and want to add another one in the field, you need to take a few extra steps to move the cursor to the right.

To add another ASCII character in the string entry field, next to the one you've already chosen:

- Type a numeric character – for example, type the number 7.
- Next, press the <DEL> key

The cursor is now positioned to the right of the previously selected ASCII character.

- Press the <RIGHT> or <LEFT> arrow key to scroll through the ASCII characters, and select another character.

6.10.5 Programming Special Keys Into Macros

Macros can contain the *function* of a subset of terminal keys. The keys that can be programmed into macros include: <ENTER>, <DEL> and <CLR> (<BLUE>-<DEL>), function keys and arrow keys. To program the function of a key:

- With the cursor in the "Global Macros" table, use the arrow keys to position the cursor in the macro field corresponding to the macro key you want to program – the field labelled #1 represents <M1>, and so on.
- Press <CTRL> and then, type the letter *l (el) (l* represents "literal").
- Press the key you wish to add to the macro.

  For example: To execute the *function* of the <ENTER> key in a macro, type <CTRL> *l* <ENTER>.

6.11 Network

Note: *This menu is not displayed when a Mobitex TRX7460 radio is installed in the terminal.*

Network		Range
Local IP		see text
Net Mask		see text
Default Gateway		see text
Employ bootp	N	Y/N

Local IP

This parameter is used to assign a unique terminal IP address so that the terminal can be identified on the network. The format is ###.###.###.###

Net Mask

A subnet mask is assigned at this parameter. The 7035 uses the subnet mask, it's own IP address and the destination IP address to determine if a packet should be sent on the local network or a remote subnet. If the destination is found to reside on the local network, the packet is sent directly to its destination. If the destination resides on a remote subnet, the packet is routed to the appropriate gateway. The accepted values for "Net Mask" range from 0.0.0.0 to 255.255.255.255.

Default Gateway

The "Default Gateway" IP address assigned at this parameter creates an identifiable communication link between the terminal and a remote sub-network – that is, a network other than the one in which the terminal is currently operating. The acceptable values for this parameter range from 0.0.0.0 to 255.255.255.255.

Note: *Setting the "Default Gateway" to 0.0.0.0 disables this feature. A communication link will not exist between sub-networks.*

Employ Bootp

When this parameter is set to "Y", a request for an IP address is automatically directed to the "BOOTP Server". If after 5 attempts, an IP address is not transmitted, the terminal uses the IP address assigned in the "Local IP" parameter.

6.12 Radio

Refer to *Appendix D: Radio Parameters* for a detailed description of the parameters used to adjust radio communications.

6.13 Sound

Sound		Range
Beep tone	2300	500-5000
Beep time	600	0-2000
Error tone	800	500-5000
Error time	600	0-2000
Scan tone 1	1250	500-5000
Scan time 1	150	0-2000
Scan tone 2	2300	500-5000
Scan time 2	150	0-2000
Scan tone 3	3750	500-5000
Scan time 3	150	0-2000

Beep Tone And Beep Time

These parameters regulate the frequency and duration of beeps emitted in a TESS or ANSI session when one of the following is received at the terminal: an *advisory*, a *hey you* or a *bell* character. Tone is measured in hertz and time in milliseconds.

Error Tone And Error Time

These parameters determine the frequency and duration of each error tone. Tone is measured in hertz and time in milliseconds.

Scan Tone 1 And Scan Time 1

“Scan tone 1” and “Scan time 1” determine the frequency and duration of the first beep of a multiple beep. Tone is measured in hertz and time in milliseconds.

Scan Tone 2 And Scan Time 2

“Scan tone 2” and “Scan time 2” determine the frequency and duration of the second beep of a multiple beep. Tone is measured in hertz and time in milliseconds.

Scan Tone 3 And Scan Time 3

“Scan tone 3” and “Scan time 3” determine the frequency and duration of the third beep of a multiple beep. Tone is measured in hertz and time in milliseconds.

TERMINAL ACCESSORIES 7

7.1 External Bar Code Readers 159
7.1.1 Entering Data With A Bar Code Reader 159
7.2 The 7035 Battery 160
7.2.1 Lithium-Ion Battery Safety Precautions 161
7.2.2 Lithium-Ion Battery Pack Specifications 162
7.3 The 7942 In-Unit Charger 163
7.3.1 Mounting Bracket 164
7.3.2 Connecting The Power Source 164
7.3.3 In-Unit Charger LED Indicators 164
7.3.4 Inserting The 7035 With Battery In The Charger 165
7.3.5 Charging The Battery 165
7.3.6 Battery Charge Fault Conditions 165
7.3.7 Charger Fault Conditions 166
7.3.8 Removing The Terminal From The In-Unit Charger 166
7.3.9 7942 Charger Specifications 166
7.4 The 7967 Gang Charger 167
7.4.1 Connecting The Power Source 167
7.4.2 Inserting And Charging The Battery 167
7.4.3 Fault Conditions 168
7.4.3.1 Fault LED Turns On During A Charge 168
7.4.3.2 Fault LED Turns On At Insertion 168
7.4.4 7967 Charger Specifications 169
7.5 Important Charger Safety Instructions 169
7.6 Antenna Types 170
7.7 The 7035 Picker Cradle 171
7.7.1 Mounting Hardware 171
7.7.2 Installation 171

7.7.3 Disassembling The Cradle Before Mounting. 172
7.7.4 Mounting The Cradle 173
7.7.5 Installing The Cables 173
7.7.6 Connecting A Cable 173
7.7.7 Connecting The Power Source 174
7.7.8 Attaching A Port Replicator 174
7.7.9 Picker Cradle Maintenance 174
7.7.10 Inserting And Removing The 7035 Terminal 175
7.7.11 Picker Cradle LED Indicator 176
7.7.12 Specifications 177
7.7.12.1 Physical 177
7.7.12.2 Environmental 177
7.7.12.3 Battery Pack 177
7.7.12.4 Agency Approvals 178
7.8 Accessories Part Number List. 179

7.1 External Bar Code Readers

Warning: ***ALWAYS TURN THE TERMINAL OFF before connecting or disconnecting any bar code reader.***

To connect a bar code reader (either a scanner or a contact wand) to the terminal, attach the device to the 28-pin peripheral port at the bottom of the unit.

Before using the bar code reader, you may need to change some parameters. For details, review “Barcode” on page 105.

7.1.1 Entering Data With A Bar Code Reader

The terminal supports two types of bar code readers: contact wands or scanners. To use a scanner, follow the manufacturer’s instructions. Use the wand as follows:

- Hold the wand at less than 30° from the vertical.
- If there is a switch on the wand, turn it on before starting the scan.
- Keep the tip in contact with the entire label.
- Move the wand across the label at a steady rate.
- Begin the scan on an area of the label with a light background, and move the wand as if drawing a straight line across the label.

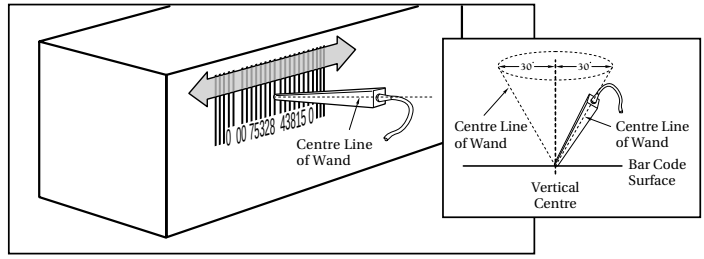

Figure 7.1 Using A Wand Bar Code Reader

If the label is scanned successfully, the scanned data appears on the display. The terminal will also beep if configured appropriately.

Occasionally, the bar code labels are poorly printed or damaged and cannot be read with the wand. In this case, use the keyboard to enter data from the label.

7.2 The 7035 Battery

Warning: ***When a battery is removed from the terminal, a backup of the system, application and any work in progress is maintained for up to 10 minutes. A fresh battery must be installed within this 10 minute time frame. THIS BACKUP WILL NOT FUNCTION UNLESS THE TERMINAL IS TURNED OFF BEFORE THE BATTERY IS REMOVED. Removing the battery while the unit is operating will result in a full reboot.***

Even after the system backup has expired, the date and time are maintained for at least 72 hours without a battery.

7035 Lithium-Ion batteries operate for a minimum of eight hours[1] after a charge. These batteries do not require conditioning. Each battery pack tracks its own capacity using an onscreen horizontal bar graph, referred to as the “battery gauge”. The battery gauge displays the percentage of remaining battery power capacity – 0 to 100%, resolution 10% of nominal capacity. The operator is notified when the battery capacity is low.

Typical battery life is 750 cycles or 3 years average use. A fast charge is completed in 2.5 hours. The 7035 terminal will notify the user when the battery performance has degraded to the point that it should be discarded.

[1] Times are approximate and may vary depending on operating conditions.

7.2.1 Lithium-Ion Battery Safety Precautions

Important: ***It is critical that this safety information be reviewed and that all warnings be strictly followed.***

Warning: ***BATTERIES ARE CONSIDERED HAZARDOUS WASTE and must be returned to Teklogix for proper disposal. All used batteries must be forwarded to one of the following Teklogix offices:***

Teklogix Inc.
2100 Meadowvale Blvd.
Mississauga, Ontario
Canada
L5N 7J9

Teklogix Corp.
1810 Airport Exchange Blvd.
Suite 500
Erlanger, Kentucky
USA 41018

Teklogix S.A.
Parc Club Du Golf-Bat 1.
13856 Aix-En-Provence
Cedex 3; France

Warning: ***TO PREVENT the battery from leaking acid, generating heat or exploding, adhere to precautions listed below.***

- The battery incorporates built-in safety devices. To ensure their proper function, do not disassemble or alter any parts of the battery.
- Do not short-circuit the battery by directly connecting any of the exposed terminals with metal objects such as wire. Do not transport or store the battery together with metal objects such as necklaces, hair pins, etc.
- Do not dispose of batteries in fire.
- Do not use or leave the battery near a heat source such as a fire or heater.
- Do not immerse the battery in water.
- When charging, use the battery charger specifically designed for the battery.
- Do not pierce, strike, throw or step on the battery.
- Do not directly solder the battery.
- Do not connect the battery to an electrical outlet, vehicle cigarette lighter, etc.
- Do not put battery into a microwave oven or pressurized container.
- Do not use the battery in combination with primary batteries (such as dry-cell batteries) or batteries of different capacities or brands.

- Immediately remove the battery from the device or battery charger and stop use if the battery gives off an odor, generates heat, becomes discoloured or deformed, or in any way appears abnormal during use.
- Do not continue charging the battery if it does not recharge within the specified charge time.
- The battery may burst or ignite if the battery leaks. Always ensure that it is away from any exposed flames.
- If leaking electrolyte sprays into your eyes, rinse them with clean running water, and immediately seek medical attention.
- Do not store the battery in extremely high temperatures (e.g., a vehicle, strong direct sunlight, etc.). This may cause the battery to overheat or ignite, and it may also reduce the performance and service life of the battery.
- Do not use in areas where static electricity is greater than what the manufacturer guarantees.
- Keep batteries out of reach of children.

7.2.2 Lithium-Ion Battery Pack Specifications

Battery Pack

Technology	Lithium-Ion (Li-Ion)
Supported packs	P.N. 20605 P.N. 20605-001 P.N. 20605-002

Battery pack P.N. 20605

Charge temperature	0˚ C to 45˚ C (32˚ F to 113˚ F).
Discharge temperature	-20˚ C to 60˚ C (-4˚ F to 140˚ F).

Battery pack P.N. 20605-001

Charge temperature	10˚ C to 45˚ C (50˚ F to 113˚ F).
Discharge temperature	-20˚ C to 60˚ C (-4˚ F to 140˚ F).

Battery pack P.N. 20605-002

Charge temperature	10˚ C to 45˚ C (50˚ F to 113 ˚ F).
Discharge temperature	-20˚ C to 60˚ C (-4˚ F to 140˚ F).

Life span	Pack performance does not degrade below 70% of nominal under typical daily use over 2 years. (Based on 3 charge/discharge cycles every 2 days and 250 working days/year.)

Charge Cycles	Minimum of 750 charge cycles.
Charge Time	Fast charge typically in 2.5 hours.
Performance Monitor	Identifies the need for pack replacement.
Voltage	7.2 V nominal (6.0 V to 8.4 V maximum)
Capacity	1350 mAh at 7.2 V nominal
Weight	115 g nominal
Battery Life	8 hours minimum at 23˚ C (73.4˚ F) with back-light on 5%, 5 scan transactions per minute, TESS emulation, TRX7370 radio. Based on typical 1 year cell degradation.
Supported Chargers	Model #7967 – 6-gang custom charger Model #7942 – In-unit charger
Memory	No memory effect.
Battery Gauge	Indicates remaining capacity, 0 to 100%, resolution 10%. Nominal capacity of battery pack is displayed as a reference.
Graceful Power Fail	Operator is notified when battery capacity is low.

7.3 The 7942 In-Unit Charger

Important: ***The 7035 cannot be switched on while it is inserted in the 7942 in-unit charger. In fact, if the terminal is "on" when it is inserted in the charger, it is automatically switched off.***

The 7942 In-Unit Charger is a single site, fast charger. This unit can charge Lithium-Ion or Nickel-Metal Hydride batteries.

Note: *To ensure that air flow through the base of the charger is unimpeded, the charger should be placed on a hard, flat surface, free of possible obstructions.*

7.3.1 Mounting Bracket

The optional mounting bracket allows the 7942 charger to be permanently secured to a table or bench, permitting “one-handed” removal of the 7035 terminal from the unit. Charging temperature is restricted to from 10° to 30° C (50° to 86° F).

To attach the mounting bracket:

- Remove the two rubber feet closest to the front of the charger. Retain the screws.
- Secure the mounting bracket to the charger using the screws removed from the rubber feet.
- Use two #8 wood screws to secure the bracket to the appropriate surface

7.3.2 Connecting The Power Source

- Plug the female end of the AC line cord into the IEC connector at the back of the charger.
- Plug the other end of the AC line cord into an appropriate power source.

When the charger is plugged in, all the LEDs turn on for a few seconds during a self-test. The “Power” LED then remains on, indicating a power connection.

7.3.3 In-Unit Charger LED Indicators

LED	Indicator Definition
Power – Green	• Always on when the charger is plugged in.
Charge – Yellow	• On during charge process. • Off once battery is fully charged.
Fault – Red	• Blinking if a battery charge fails. • On solid when battery is rejected. (See “Battery Charge Fault Conditions” on page 165 and “Charger Fault Conditions” on page 166 for details.)
Ready – Green	• On when charge is completed successfully.

Table 7.1 Charger LEDs

7.3.4 Inserting The 7035 With Battery In The Charger

The 7942 Charger has a “Power” LED along with three additional LEDs – Ready, Charge and Fault. Ensure that the green “Power” LED at the front of the charger is “on”. The in-unit battery charge pocket is moulded, making it easy to slide the terminal into the charger well.

- Grasp the terminal just below the display with the keyboard facing you, and slide the lower portion of the terminal with battery into the charger.
- Apply steady, gentle downward pressure to properly mate the charger connector with the battery in the terminal.

7.3.5 Charging The Battery

When the terminal with battery is inserted in the charger, all LEDs light up. After a few seconds, the “Ready” and “Fault” LEDs turn off. The “Charge” LED remains on, indicating the fast charge is in progress. The “Power” LED should always be on.

Note: *If the 7035 is powered up when it is inserted in the charger, it will be turned off automatically.*

Battery Charged And Ready

Typically, a fast charge takes 2.5 to 3.5 hours. When the “Charge” LED turns off and the green “Ready” LED turns on, the fast charge cycle is complete and the terminal is ready for use.

7.3.6 Battery Charge Fault Conditions

The “Fault” LED *remains on* under one of the following circumstances:

- The charger cannot read valid data from the battery pack.
- The battery is not compatible with the 7942 charger.
- The battery pack is set to “inhibit charge”.
- The battery is defective (cell damage).
- The battery temperature is outside the acceptable charge range.

The “Fault” LED *blinks* when a charge process has failed. Some possible causes are listed below:

- The battery temperature has gone outside of the acceptable charge range.
- The charger cannot communicate with the battery pack.
- The battery is defective.
- The battery did not complete the charge cycle within the maximum timeout period.

When the terminal is removed from the charger, the “Fault” LED should turn off. If this LED remains on after the terminal is removed, refer to “Charger Fault Conditions” on page 166.

7.3.7 Charger Fault Conditions

An internal charger fault is indicated if:

- The “Fault” LED remains illuminated *after* the terminal is removed.
- All LEDs turn on and remain illuminated when the charger is powered up.
- All LEDs turn on during normal operation.

Power should be cycled to the charger to correct these problems. If any of these symptoms occur persistently, the charger unit should be repaired by a qualified service technician.

7.3.8 Removing The Terminal From The In-Unit Charger

To remove the terminal from the charger:

- Apply steady downward pressure to the front of the charger with one hand while pulling up on the terminal. If necessary, you may need to use a gentle, side-to-side rocking motion to slide the terminal out of the charger well.

7.3.9 7942 Charger Specifications

Charge Sites	1 dedicated for in-unit charging
Charge Time	2.5 to 3.5 hours
Compatibility	Lithium-Ion (Li-Ion), Nickel-Metal Hydride (NiMH).
Connection	Via contacts at base of battery pack (battery must be installed in terminal).

Charge Operation	Charging occurs automatically upon insertion without user intervention. Indicators display charge status.
Lifetime:	Minimum 5000 pack insertions, typical 10,000 insertions.
Reliability	Self-cleaning contacts.
Power Supply	Autoranging (100-240 VAC ± 10%, 50/60 Hz

7.4 The 7967 Gang Charger

The 7967 Gang Charger can charge up to six Lithium-Ion batteries at one time.

7.4.1 Connecting The Power Source

The 7967 Gang Charger is powered using a universal AC input. It accepts voltages ranging from 100-230 volts AC, 50/60 Hz. The AC receptacle, an IEC 320 type connector, is located at the back of the charger.

- Plug the female end of the AC line cord into the IEC connector at the back of the charger.
- Plug the other end of the AC line cord into an appropriate power source.

All front panel LEDs turn on for a few seconds during a self-test mode. The “Power On” LED then remains on, indicating a power connection.

- Check to make sure that the fan is running.

7.4.2 Inserting And Charging The Battery

The 7967 Gang Charger has a “Power On” LED and each charge pocket has three LEDs – Charge, Fault and Ready. Ensure that the green “Power On” LED at the front left side of the charger is “on”. The battery charge pockets are moulded, making it easy to snap the batteries into the pockets.

- With the four electrical contacts facing down and textured plastic battery surface facing the front of the charger, insert the battery into a charger pocket. It should click into place.

Charging will begin immediately.

Battery Charged And Ready

When the “Charge” LED turns off and the green “Ready” LED turns on, the fast charge cycle is complete, and the battery is ready for use.

Typically, a fast charge takes 2.5 hours. Note that for Lithium-Ion batteries, 70% of the charge occurs within the first hour.

7.4.3 Fault Conditions

The red “Fault” LED turns on to indicate that the battery pack has been rejected or the charge process has failed.

7.4.3.1 Fault LED Turns On During A Charge

- The battery temperature has changed such that it is outside of the acceptable range and the fast charge is halted. Remove the battery and permit it to warm or cool to room temperature before reinserting and restarting the charge.
- The battery is defective – for example, the battery may have a weak cell, an open cell or a short.
- The battery did not complete the charge cycle within the maximum timeout period. Clean the battery contacts and try inserting the battery for charging. Check the battery parameter performance using the utility provided in the 7035. Try another recharge cycle.

7.4.3.2 Fault LED Turns On At Insertion

- The charger cannot read valid data from the battery. Clean the battery contacts and try charging the battery again.
- In some cases, foreign matter may block the battery receptacle interface. Check the charger receptacle for debris and clear if required.
- The hand-held terminal has set the pack to inhibit the charge. In this case, the battery is no longer useful and the battery should be returned to Teklogix Inc. for proper disposal. Return addresses are listed on page 161.
- The battery is not compatible with this charger.
- The battery temperature is outside of the acceptable range and the fast charge is inhibited. Remove the battery and permit it to warm or cool to room temperature before reinserting and restarting the charge.

7.4.4 7967 Charger Specifications

Charge Sites	6
Compatibility	Lithium-Ion batteries only.
Connection	Via contacts at top of battery pack.
Charge Operation	Charging occurs automatically upon insertion without user intervention. Indicators display charge status.
Limitations	Will not charge NiMH batteries. However, if a NiMH battery is inserted in this charger, neither the battery nor the charger will be damaged.

7.5 Important Charger Safety Instructions

- **SAVE THESE INSTRUCTIONS** – This manual contains important safety and operating instructions for battery charger Model 7967 and 7942.
- Before using the battery charger, read all instructions and cautionary markings on (1) battery charger, (2) battery, and (3) product using battery.
- Use of an attachment not recommended or sold by the battery charger manufacturer may result in fire, electric shock, or personal injury.
- To reduce risk of damage to the electric plug and cord when unplugging the charger, pull the plug rather than the cord.
- Make sure the cord is positioned so that it is not stepped on, tripped over, or otherwise subjected to damage or stress.
- Do not operate the charger with a damaged cord or plug. Replace immediately.
- Do not operate the charger if it has received a sharp blow, been dropped, or otherwise damaged in any way; it should be inspected by qualified service personnel.
- Do not disassemble the charger; it should be repaired by qualified service personnel. Incorrect reassembly may result in electric shock or fire.
- To reduce risk of electric shock, unplug the charger from the outlet before attempting any maintenance or cleaning.

- An extension cord should not be used unless absolutely necessary. Use of an improper extension cord could result in fire or electric shock.
  If an extension cord must be used, make sure:
  - The plug pins on the extension cord are the same number, size, and shape as those on the charger.
  - The extension cord is properly wired and in good electrical condition and that the wire size is larger than 16 AWG.
- Do not expose the charger to rain or snow.
- Do not place batteries in the charger if they are cold from extended exposure to a freezer or outside temperatures below 10°C (50°F). Allow them to warm up to room temperature for at least two hours.
- Do not use the charger if, after an overnight charge, any of the batteries feel warmer than the charger housing. The charger should be inspected by qualified service personnel.
- Do not use the charger if any of the batteries or the charger get more than lukewarm. The equipment should be inspected by qualified personnel.

7.6 Antenna Types

Available external whip antennas include a 3 inch 2.4 GHz dipole whip and a 4 inch VHF whip.

Antenna Type	Connector Type	Antenna Whip	Model Description
Internal	Plastic Cap	N/A	N/A
External	Reverse gender SMA	2.4 GHz Dipole P.N. 20667	7035-SS (Spread Spectrum)
External	Standard SMA	VHF Whip P.N. 20668	7035-NB (Narrowband)

Table 7.2 7035 Antennas

7.7 The 7035 Picker Cradle

Picker cradles provide physical support for terminals, allowing “hands-free” operation. Teklogix offers three types of picker cradles:

- Model number 7937A – an unpowered picker cradle.
- Model number 7937B – a powered picker cradle with 11-16VDC input.
- Model number 7937C – a powered picker cradle with 10-55 VDC input.

7.7.1 Mounting Hardware

The 7035 Picker Cradle can be mounted on its own or with one of the following:

- Heavy-duty pedestal mount (PN 30082)
- Pedestal mount with locking joint (PN 18447-001)
- Vertical mounting plate (PN 18440-001)
- Horizontal mount plate (PN 18448-001)
- Scanner mounting plate (PN 18449-001)
- Scanner holder (PN 92892)
- Port replicator (PN 21658)

7.7.2 Installation

Note: *Where applicable, the unit should be mounted inside the roll cage.*

Installation requirements vary depending on the type of application used – mobile (e.g., a fork lift truck) or fixed (e.g., a work table). For a typical installation:

1. Choose a suitable mounting location.
2. If necessary, connect the pass-through cable to an accessory.
3. Connect the power source.

7.7.3 Disassembling The Cradle Before Mounting

Note: *If the cradle is attached from behind to a plate or pedestal mount using the four threaded holes (#8-32) in the rear bracket, it* ***does not*** *need to be disassembled. Ensure that the screws used are the correct length.*

The rear bracket of the cradle also has four 'through' holes that allow the cradle to be attached directly to a surface. Prior to mounting, the plastic cradle must be removed.

To disassemble the cradle:

- Unscrew the two hex bolts (one per side), and pull away the plastic cradle.

The diagram below includes the disassembly of the pedestal mount.

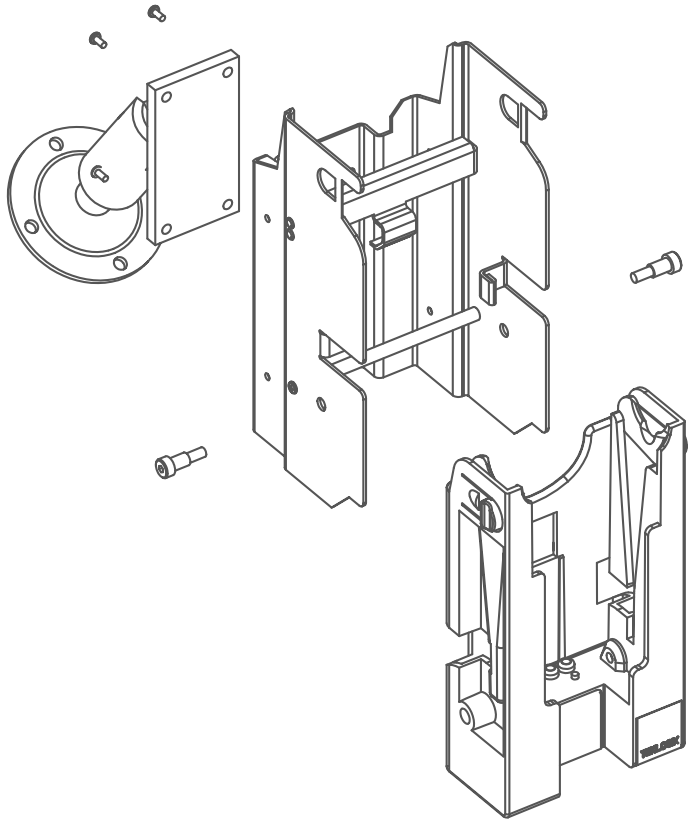

Figure 7.2 Disassembling The Cradle For Mounting

7.7.4 Mounting The Cradle

- Mount the main chassis using four #8-32 machine screws and four #8-32 KEPS nuts.

Note: *If mounting directly to wood, use four #8 wood screws.*

- Replace the plastic cradle, securing it with two hex bolts (one per side).
- If a pedestal mount is used, adjust the angle of the cradle to the optimum viewing angle, and securely tighten the hex and wing screws.

7.7.5 Installing The Cables

Before installing the cables between the cradle and other devices, consider the following:

- Ensure that drilling holes will not damage the vehicle or its wiring.
- Protect cable runs from pinching, overheating, and physical damage.
- Use grommets to protect cables that pass through metal.
- Use plastic straps to prevent cables and connectors from loosening.
- Keep cables away from heat sources, grease, battery acid, and other potential hazards.
- Keep cables away from control pedals and other moving parts that may damage the cables or interfere with the operation of the vehicle.
- Leave enough extra cable so that the terminal can be easily removed.

Note: *Where applicable, ensure that the unit is mounted inside the roll cage.*

7.7.6 Connecting A Cable

When a picker cradle is ordered with a peripheral cable:

- Connect one end of the cable to the accessory.
- Connect the other end to the 7035 itself.
- Secure the cable to avoid physical injury or damage to the cable.

7.7.7 Connecting The Power Source

Model 7937A does not require a power connection. Model 7937B and 7937C have short power cords and connectors. The extension power cable (P.N. 13985) joins the cradles to a power source.

If an unfused power source must be used, install the fuse assembly (P.N. 19440) provided with P.N. 13985. To connect the fuse assembly,

- Push the male connector of the fuse assembly into the female connector at the positive (red) lead of the power cable.
- Connect the red lead to the positive side of the battery. Connect the black lead to the negative side of the battery.

Warning: ***Do not reverse the polarity or connect to a voltage outside the specified range.***

Note also that the fuse should be UL approved.

7.7.8 Attaching A Port Replicator

A port replicator, P.N. 21658, is an accessory which extends the 28-pin peripheral port connection for the 7035 terminal to an identical 28-pin fixed connector. The port replicator mounts on the underside of any of the 7035 picker cradles with 2 screws. A dsub9 COM port is also included. It is equipped with transmit, receive, ground, CTS and RTS signals.

When a port replicator is attached to a cradle, you can, for example, attach a scanner to the 28-pin connector and a serial printer to the dsub9 connector.

7.7.9 Picker Cradle Maintenance

Picker cradles requires little maintenance.

- Ensure that the inside of the plastic cradle is clear of any debris.
- Avoid using strong solvents.

7.7.10 Inserting And Removing The 7035 Terminal

The picker cradle is comprised of two parts – a fixed outer metal chassis that is secured to the vehicle or work surface, and a moveable plastic cradle in which the 7035 terminal is placed. The plastic cradle tilts forward so that the terminal can be inserted or removed, and it tilts back to lock the terminal.

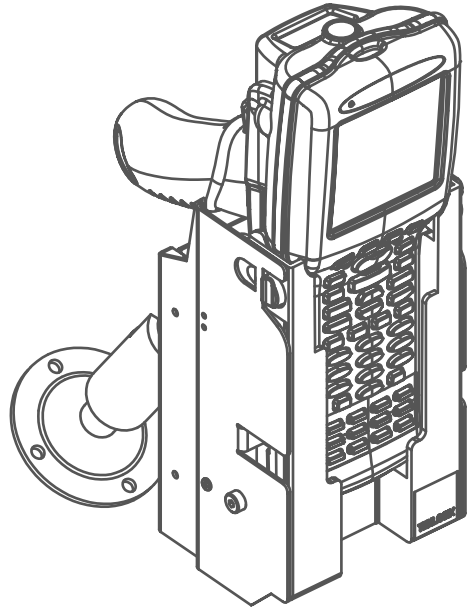

Figure 7.3 Unpowered Picker Cradle 7937A

To insert the 7035 in the plastic cradle,

- Using your thumb and first finger, depress the two raised plastic buttons located on the top of the cradle.
- Pull the plastic carrier forward until a stop is felt to ensure that the locking tabs are fully withdrawn from the plastic cradle.
- Push the 7035 terminal into the plastic cradle.
- Push the plastic cradle back, snapping it into place.

To remove the 7035 from the plastic cradle,

- Reverse the above procedure.

7.7.11 Picker Cradle LED Indicator

LED Colour	Conditions
Green/Orange	• Cradle is unlocked.
Green	• Cradle is locked. • Terminal is ON, and battery pack PN 20605-002 is installed. • Battery cells are disconnected within the battery pack, and the terminal is powered from cradle (indefinite usage).
Orange	• Cradle is locked. • Terminal is OFF. • Battery pack PN 20605 or 20605-001 or 20605-002 is installed. • Battery is charging and capacity is less than 80% charged.
Red	• Cradle is locked. • Terminal is OFF, and battery pack PN 20605, 20605-001 or 20605-002 is installed. Battery ***not*** charging because of incorrect data (charge fault). • Terminal is not inserted in cradle.
Flashing Green	• Cradle is locked. • Terminal is OFF. • Battery pack PN 20605 or 20605-001 or 20605-002 is installed. • Battery is charging and capacity is more than 80% charged. The unit is ready for mobile use. *Note: If the terminal is turned "on" while charging, the terminal will signal the cradle to immediately stop the charge process.*
Flashing Orange	• Cradle is locked. • Terminal is OFF. • Battery pack PN 20605 or 20605-001 or 20605-002 is installed. • Battery temperature is lower than 10˚ C or higher than 45˚ C. Charging will begin when battery within correct temperature range.
Flashing Red	• Cradle is locked. • Terminal is ON and 20605 or 20605-001 battery is installed. • Terminal running off battery pack, ***not*** cradle.

Table 7.3 Charger Indicators

7.7.12 Specifications

7.7.12.1 Physical

Dimensions (W x H x D)	115 x 203 x 115 mm (4.5" x 8.0" x 4.5")
Plastic cradle	Jet Black, Bayer Makroblend EL-700
Metal chassis	16 AWG cold rolled steel – black enamel over yellow chromate plate
Weight	1.4 kg (3.09 lbs.)

7.7.12.2 Environmental

Operating temperature	-20˚ C to 45˚ C (-4˚ F to 113˚ F)
Storage temperature	-40˚ C to 60˚ C (-40˚ F to 140˚ F)
Charge mode	10˚ C to 45˚ C (50˚ F to 113˚ F)
Charge pump mode	10˚ C to 45˚ C (50˚ F to 113˚ F)
Discharge mode	-20˚ C to 60˚ C (-4˚ F to 140˚ F)
Relative humidity	10 to 90% (non-condensing)
Shock	25 G with an 11 ms rise-time on all axes
Vibration	Random, 3-axis, 1.5g RMS, 4-500 Hz, 60 minutes.

7.7.12.3 Battery Pack

Supported chemistry	Lithium-Ion special version with internal cell disconnect.
Supported cell type	4.1V or 4.2V (Varta LGR 18650P)
Supported packs	P.N. 20605 P.N. 20605-001 P.N. 20605-002

Battery pack P.N. 20605

Charge temperature	0˚ C to 45˚ C (32˚ F to 113˚ F).
Discharge temperature	-20˚ C to 60˚ C (-4˚ F to 140˚ F).

Battery pack P.N. 20605-001

Charge temperature	10˚ C to 45˚ C (50˚ F to 113˚ F).
Discharge temperature	-20˚ C to 60˚ C (-4˚ F to 140˚ F).

Battery pack P.N. 20605-002

Charge temperature Discharge temperature	10˚ C to 45˚ C (50˚ F to 113 ˚ F). -20˚ C to 60˚ C (-4˚ F to 140˚ F).
Target pack types	Proprietary, 2S, 7.2V 1600 mAh (Li-Ion)
Charge sites	1 site for in-unit charging.
Charge mode	Fast charge CCCV
Operation under charge	Not permitted. Charging will stop when terminal is turned ON.
Input power	Model 7937B – 11 - 16 VDC 36 W max. Model 7937C – 10 - 55 VDC 36 W max.
Input connector	AMP type CPC #206153-1 on flying lead.
Electrical interface	4 spring-loaded heavy-duty ‘pogo type’ pins in base of unit.
Pin-out	+BAT, -BAT. TEMP, DATA

7.7.12.4 Agency Approvals

USA	FCC Part 15 (EMI) UL 1950 (electrical safety) or CSA/NRTL equivalent
Canada	ICES-003/CSA C108.8-M1983 (EMI) CSA - C22.2 No. 950-M89 (electrical safety)
Europe	European “CE” mark: 72/73/EEC Low Voltage Directive 89/336/EEC EMC Directive

7.8 Accessories Part Number List

Accessory	Part #/Model #
Pistol Grip Kit	20639
Holster	30584
Hand Strap Kit	20610-001
Wrist Strap	30020
Belt & Belt Loop	30138 20636
Shoulder Strap	30585
Protective Case	30586
Cradle	30600

Table 7.4 Accessory Part Numbers

SPECIFICATIONS 8

8.1 Radio Specifications 183

8.2 7035 Hand-Held Terminal Specifications 186

8.3 8255/8260 Vehicle-Mount Terminal Specifications 188

8.4 Peripheral Ports 191

8.4.1 Serial Port 1 (COM 1) 191

8.4.2 Serial Port 2 (COM 2) 191

8.5 Memory Expansion Board 192

8.6 IrDA Port (7035 Only) 192

8.7 Wireless Communication Options 192

8.8 Bar Code Scanning 193

8.8.1 Internal Scanners (7035 Only) 193

8.8.2 External Scanners 193

8.8.3 Internal Scanner Port (7035 Only) 193

8.9 Internal Scanner Specifications (7035 Only) 194

8.10 Power Management (7035 Only) 197

8.10.1 Power Save States. 197

8.11 Lithium-Ion Battery Pack (7035 Only) 199

Note: *Performance specifications are nominal and subject to change without notice.*

8.1 Radio Specifications

Important: ***Sites in Canada using Teklogix TRX7430 and TRX7440 802.11 radios require a radio licence unless they are installed totally within a building (user must obtain licence from Industry Canada).***

TRX7370 Narrow Band

Transmit Power	0.5, 1.0, 2.0 Watts
Frequency Range	403-512 MHz
Channels	20
Data Rates	4800, 9600, 19.2 kbps

TRX7440 (RangeLAN 802 8400) PC Card IEEE 802.11 Frequency Hopping Spread Spectrum

Transmit Power	100mW (ETSI), 400mW (FCC/IC)
Frequency Range	2.4 GHz - 2.5 GHz
Channels	79 (FCC, ETSI) 35 (FR) 23 (JP) 27 (SP)
Data Rates	1, 2 Mbps

TRX7410 & TRX7410A TekLan 902 MHz Direct Sequence Spread Spectrum

Transmit Power	TRX7410=1 Watt, TRX7410A=250 mW
Frequency Range	902-928 MHz
Channels	7
Data Rates	121 kbps

*TRX7430 (WaveLAN/IEEE) PC Card IEEE 802.11 Direct Sequence Spread Spectrum

Transmit Power	32 mW
Frequency Range	2.4 GHz - 2.5 GHz
Channels	11 (FCC)
	13 (ETSI)
	4 (FR)
	1 (JP)
	2 (SP)
Data Rates	1, 2 Mbps

** Refer to "Regulatory Information – TRX7430/31 WaveLAN/IEEE PC Card 802.11 DS SS" on page 185 for installation and usage information.*

*TRX7431 (WaveLAN/IEEE) PC Card IEEE 802.11 Direct Sequence Spread Spectrum

Transmit Power	32 mW
Frequency Range	2.4 GHz - 2.5 GHz
Channels	11 (FCC)
	13 (ETSI)
	4 (FR)
	1 (JP)
	2 (SP)
Data Rates	1, 2, 5.5, 11 Mbps

** Refer to "Regulatory Information – TRX7430/31 WaveLAN/IEEE PC Card 802.11 DS SS" on page 185 for installation and usage information.*

Regulatory Information – TRX7430/31 WaveLAN/IEEE PC Card 802.11 DS SS

The IEEE 802.11 WaveLAN PC Card must be installed and used in strict accordance with the manufacturer's instructions. This device complies with the following radio frequency and safety standards.

Canada – Industry Canada (IC)

This device complies with RSS 210 of Industry Canada.

Europe – EU Declaration of Conformity

This device complies with the specifications listed below, following the provisions of the EMC Directive 89/336/EEC:

- ETS 300-826 General EMC requirements for Radio equipment.
- ETS 300-328 Technical requirements for Radio equipment.

USA – Federal Communications Commission (FCC)

This device complies with Part 15 of FCC Rules. Operation of the devices in a WaveLAN System is subject to the following two conditions:

- This device may not cause harmful interference.
- This device must accept any interference that may cause undesired operation.

Exposure to Radio Frequency Radiation.

The radiated output power of the IEEE 802.11 WaveLAN PC Card is far below the FCC radio frequency exposure limits. Nevertheless, the WaveLAN PC Card shall be used in such a manner that the potential for human contact during normal operation is minimized. When using this device in combination with WaveLAN Outdoor Antenna products, a certain separation distance between antenna and nearby persons has to be kept to ensure RF exposure compliance. Refer to the Regulatory Statements as identified in the documentation that comes with those products for additional information.

Interference Statement

This equipment has been tested and found to comply with the limits for a Class B digital device, pursuant to Part 15 of the FCC Rules. These limits are designed to provide reasonable protection against harmful interference in a residential installation.

This equipment generates, uses and can radiate radio frequency energy. If not installed and used in accordance with the instructions, it may cause harmful interference to radio communications. However, there is no guarantee that interference will not occur in a particular installation.

If this equipment does cause harmful interference to radio or television reception, which can be determined by turning the equipment off and on, the user is encouraged to try and correct the interference by one or more of the following measures:

- Reorient or relocate the receiving antenna.
- Increase the distance between the equipment and the receiver.
- Connect the equipment to an outlet on a circuit different from that to which the receiver is connected.
- Consult the dealer or an experienced radio/TV technician for help.

Lucent Technologies is not responsible for any radio or television interference caused by unauthorized modification of the devices included with this IEEE 802.11 WaveLAN Kit, or the substitution or attachment of connecting cables and equipment other than specified by Lucent Technologies.

The correction of interference caused by such unauthorized modification, substitution or attachment will be the responsibility of the user. For country-specific approvals, please consult "Radio Certification Sheet – Lucent WaveLAN/IEEE PC Card Radio" – part number 80450.

TRX7460 Mobitex Radio

Transmit Power	2 Watt max
Frequency Range & Channels	Frequency range and number of channels is dependent on the radio module. Refer to the table below:

Radio Type	Transmitter Frequencies	Receiver Frequencies	Number of Channels
M2150 (Two RX & TX bands)	425.5 - 426.1 MHz	440.0 - 440.6 MHz	48
	459.6 - 459.9 MHz	453.1 - 453.4 MHz	24
M2160	410.0 - 420.0 MHz	420.0 - 430.0 MHz	800
M2190	896.0 - 902.0 MHz	935.0 - 941.0 MHz	480

Data Rates	8 kbps

8.2 7035 Hand-Held Terminal Specifications

Physical Size

69 mm (2.73") W x 40 mm (1.60") D, 203 mm (8") – circumference, at keyboard

93 mm (3.68") W x 63 mm (2.50") D x 241 mm (9.5") H (max. overall) – without integrated scanner

93 mm (3.68") W x 73 mm (2.90") D x 241 mm (9.5") H (max. overall) – with integrated scanner

Weight

7035 – Spread Spectrum	633 g (22.3 oz.) including battery and radio
7035 – Narrow Band	763 g (26.9 oz.) including battery and radio
With integrated scanner, add	48 g (1.7 oz.)
With pistol grip, add	110 g (3.9 oz.)
With hand strap, add	17 g (0.6 oz.)

Environmental

Operating temperature	0° to 50°C (32° to 122°F)
Storage temperature	-20° to 60°C (-4° to 140°F)
Relative humidity	10 to 90% (RH non-condensing)
Rain/Dust	IEC 529, classification IP54
Shock	5 ft. drop to concrete (5 times)

Warning: ***The battery electrolyte freezes below -30˚ C (-22 F). Frozen electrolyte will damage the battery life and capacity.***

CPU

Am486 DX-33 derivative with 8k cache
4 MB Flash ROM (BIOS, DOS, applications)
8 MB RAM.

Memory Expansion

Proprietary plug-in card	4 MB Flash ROM, expandable to 8 MB 8 MB RAM, expandable to 16 MB RAM, depot upgradeable.

Electrical

Configuration (battery pack)	1P2S
Power supply (battery pack)	7.2 V nominal (6.0 V to 8.4 V maximum)
Charge time	Fast charge typically 2.5 hours.
Capacity	1350 mAh @ 0.2C discharge to 5.5V terminal
Charge temperature	0˚ C to 40˚ C (32˚ F to 104˚ F)
Discharge temperature	-20˚ C to 60˚ C (-4˚ F to 140˚ F)
Battery storage temperature	-20˚ C to 60˚ C (-4˚ F to 140˚ F)
Battery life	8 hours minimum at 23˚ C (73.4˚ F) with backlight on 5%, 5 scan transactions per minute, TESS emulation, TRX7370 radio. Based on typical 1 year cell degradation.
Charge cycles	Minimum of 750 charge cycles.
Performance monitor	Identifies the need for pack replacement.

Display

Active Area	62 x 62 mm (2.44" x 2.44"), 0.38 mm dot pitch.
Backlight Control	Automated function.
Text Mode Screen Formats:	

Character Cell	Character Height (mm)	Lines x Column
6x8	3.04	18x26
8 x 8	3.04	18x20
8 x 14	5.32	10x20
8 x 16	6.08	9x20

Approvals

Safety (applies to chargers)	UL 1950, CSA C22.2 No950, LVD EN 60950
EMC	FCC Part 15 Class B, EMC Directive Class B
Laser	CDRH/IEC Class II

8.3 8255/8260 Vehicle-Mount Terminal Specifications

8255 – Physical Size And Weight

Enclosure: 16 gauge steel – 1.5 mm (0.060") with baked enamel finish

Size: 287 mm (11.3") W x 102 mm (4.0") D x 229 mm (9.0") H

Weight: 3.8 kg (8.4 lbs)

8260 Display – Physical Size And Weight

Enclosure: 16 gauge steel – 1.5 mm (0.060") with baked enamel finish

Size: 287 mm (11.3") W x 64 mm (2.5") D x 229 mm (9.0") H

Weight: 3.4 kg (7.5 lbs)

8260 Keyboard – Physical Size And Weight

Enclosure: 16 gauge steel – 1.5 mm (0.060") with baked enamel finish

Size: 287 mm (11.3") W x 64 mm (2.5") D x 229 mm (9.0") H

Weight: 1.1 kg (2.4 lbs)

8255 VFD — Environmental

Operating temperature	-10° to 50° C (-14° to 122° F)
Storage Temperature	-40° to 60° C (-40° to 140° F)
Relative Humidity	10 to 90% (RH non-condensing)
Shock	30 g peak sawtooth shock pulse, 11 ms duration on each axis
Random Vibration	1.5 g RMS, 4 Hz to 500 Hz, 60 min duration on each axis
Rain/Dust	IEC 529, IP66 rating

8255 LCD And 8260 LCD — Environmental

Operating temperature	0° to 50° C (32° to 122° F)
Storage Temperature	-20° to 60° C (-4° to 140° F)
Relative Humidity	10 to 90% (RH non-condensing)
Shock	30 g peak sawtooth shock pulse, 11 ms duration on each axis
Random Vibration	1.5 g RMS, 4 Hz to 500 Hz, 60 min duration on each axis
Rain/Dust	IEC 529, IP66 rating

Memory Expansion

Proprietary plug-in card	8 MB RAM, expandable to 16 MB. 4 MB Flash ROM, expandable to 8 MB.

Display — 8255 Vacuum Fluorescent

Active Area	52 x 166 mm (2.0" x 6.5")
Backlight Control	Not required
Font Sizes (line x character)	5x32, 10x32
Resolution	256 W x 80 H
Attributes	Normal, reverse video, blink and underline.

Display – 8255 Liquid Crystal

Active Area	68 x 175 mm (2.7" x 6.9")
Backlight Control	Cold cathode fluorescent tube with programmable auto shutoff.
Font Sizes (line x character)	12x80, 14x80, 25x80
Resolution	640 W x 200 H
Attributes	Normal, reverse video, blink and underline.

Display – 8260 Liquid Crystal

Active Area	148 x 196 mm (5.8" x 7.7")
Backlight Control	Cold cathode fluorescent tube with programmable auto shutoff.
Font Sizes (line x character)	25x80
Resolution	640 W x 480 H
Attributes	Normal, reverse video, blink and underline.

Approvals

EMC	FCC Part 15 Class B, CE mark for Europe • Conforms with Council Directive 89/336/EEC • Complies with standards EN 55022 class B and EN 50082.1

8.4 Peripheral Ports

Type	External 28-pin PCR male connector
Type (8255/8260 Only)	External 36-pin PCR male connector

8.4.1 Serial Port 1 (COM 1)

Type	DTE, 16550A equivalent (with 16 byte data FIFO)
Electrical	RS-232D signalling, maximum cable length – 50 ft. (typical – 6 ft.)
Signal Lines	RTS, CTS, TxD, RxD
Supported Modes	Standard UART with RTS/CTS handshaking
Application Interface	Via standard 16550 h/w registers or BIOS serial device
Transfer Rates	2400 - 115,000 bps
Compatibility	User assigned.
Protocols	Application dependent.
Limitations	For the 7035 only, COM1 is shared with the IrDA port; only one peripheral can be active at one time. No hardware handshake support for DTR, DSR, DCD, RI.

8.4.2 Serial Port 2 (COM 2)

Type	DTE, proprietary double-buffered (similar to 8251A)
Electrical	RS-232D signalling, maximum cable length – 50 ft. (typical – 6 ft.)
Signal Lines	TxD, RxD
Supported Modes	Basic UART (no hardware handshaking)
Application Interface	Only through BIOS serial device.
Transfer Rates	2400 - 57,600 bps
Compatibility	Decoded Scanners, Scan-See, download cable (serves as the “monitor” port).
Protocols	Application dependent.
Limitations	Not intended for general use with user applications. No hardware handshake support.

8.5 Memory Expansion Board

Type	Internal, plug-in printed circuit module
Access	Not customer upgradeable.
Compatibility	Proprietary
DRAM	8 MB
Flash ROM	4 MB

8.6 IrDA Port (7035 Only)

Function	Intended for application download and possible batch data transfer.
Compatibility	IrDA Specification Version 1.1 (physical and link layer)
Supported Transfer Rates	All UART rates (2400 bps – 115,000 bps)
Supported Modes	UART (Async)
Limitations	Shared with serial port COM 1. Only one peripheral active at a time.

8.7 Wireless Communication Options

Refer to “Radio Specifications” on page 183 for a description of the radio types available for Teklogix 7035, 8255 and 8260 terminals. Descriptions also include transmission power, data rates and channel information for each radio.

8.8 Bar Code Scanning

Scanner Types	Decoded and non-decoded.
Non-Decoded Codes Supported	Code 39, code 128, EAN 13, EAN 8, EAN 128, UPC-A, UPC-E, Codabar, Code 93, Code 11, Interleaved 2-of-5, MSI/PLESSY, Discrete 2-of-5.
Decoded Codes Supported	Dependent on external scanner choice.
Code Discrimination	Automatic for all selected codes, Non-Decoded input. Decoded input is external scanner dependent.

8.8.1 Internal Scanners (7035 Only)

Base Options	Standard, Standard High Visibility or Long Range, factory installed.
Scan Triggering	If an aiming dot is available on the installed scanner, the aiming dot will be enabled for a configurable time period after which normal scanning begins. Double-clicking trigger will override aiming delay and initiate immediate scan.

8.8.2 External Scanners

Supported Types	Decoded and Non-Decoded 5V only.
Interface	Via peripheral port. Pinout compatible with all 7030 and 8055 scanners.

8.8.3 Internal Scanner Port (7035 Only)

Refer to Table B.4 “Internal Scanner Connector,” in *Appendix B: Port Pinouts And Cable Diagrams* for a detailed connector table.

Compatibility	Symbol SE1200, SE1200LR, SE1200HV

8.9 Internal Scanner Specifications (7035 Only)

Parameter	7035 Standard Range (SE 1200)	7035 Long Range (SE 1200LR)
Light Source	Visible Laser Diode, 675nm ± 5nm	Visible Laser Diode, 650nm ± 5nm
Laser Class	CDRH Class II DIN EN 60825: July 1993, Class 2	CDRH Class II DIN EN 60825: July 1993, Class 2
Laser Power	1.0 mW Max. Average Radiant Power	1.0 mW Max. Average Radiant Power
Pulse Power Duration	Continuous	Continuous
Scan Angle	42˚ ± 2˚	23˚ ± 2˚
Scan Repetition	36 ± 3 scans/second (bidirectional)	36 ± 3 scans/second (bidirectional)
Skew Tolerance	± 65˚ from normal	± 60˚ from normal
Pitch Angle	± 55˚ from normal	± 65˚ from normal
Roll Tolerance	± 20˚ from vertical	± 10˚ from vertical
Specular Dead Zone	± 2˚ from normal	± 2˚ from normal
Decode Depth of Field	See Figure 8.2 on page 196. Minimum bar width is 5.0 mil (0.127 mm)	See Figure 8.3 on page 197. Minimum bar width is 10.0 mil (0.254 mm)
Print Contrast Minimum	20% absolute dark/light reflective measured at 675 nm.	40% absolute dark/light reflectance measured at 675 nm.
Ambient Light Immunity	Sunlight: 8000 ft. candles Artificial Light: 450 ft. candles	Sunlight: 8000 ft. candles Artificial Light: 450 ft. candles

Table 8.1 Scanner Specifications

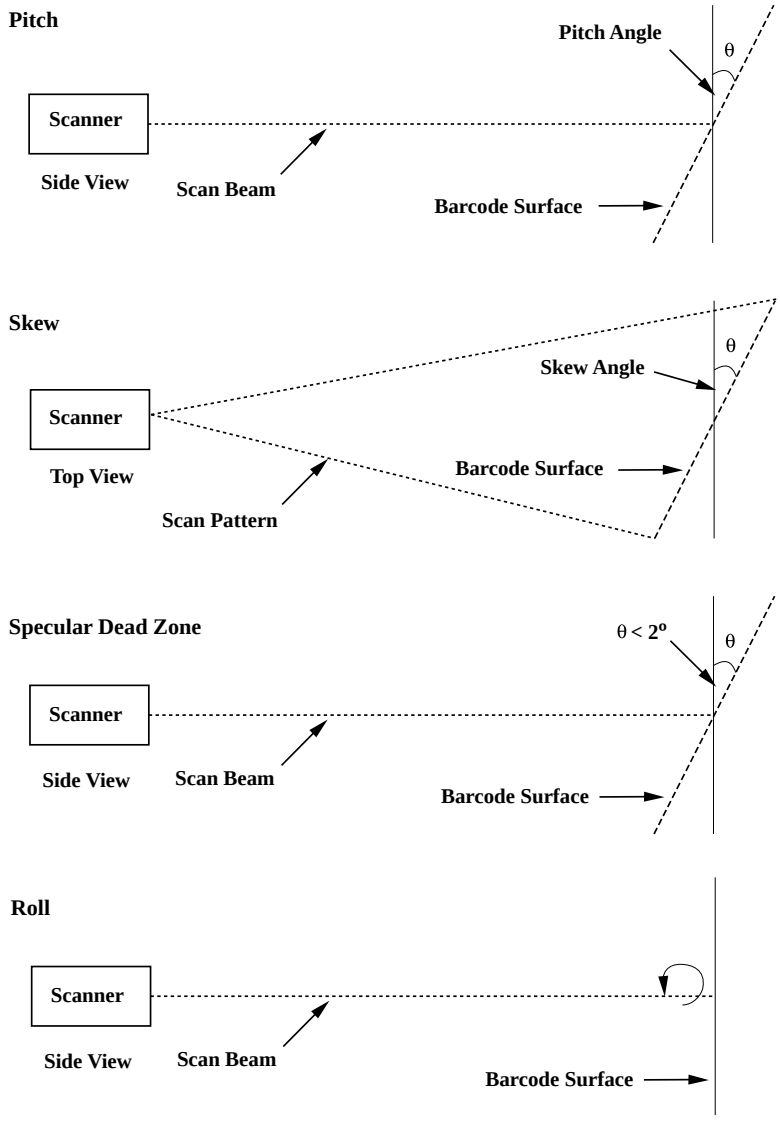

Figure 8.1 Pitch, Skew And Specular Dead Zone

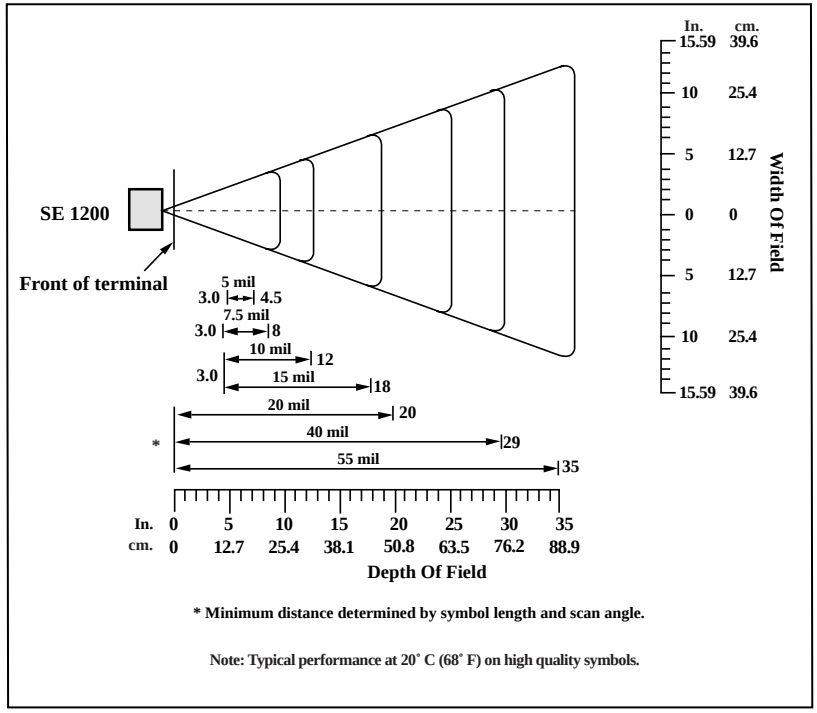

Figure 8.2 Decode Zone, Standard Range

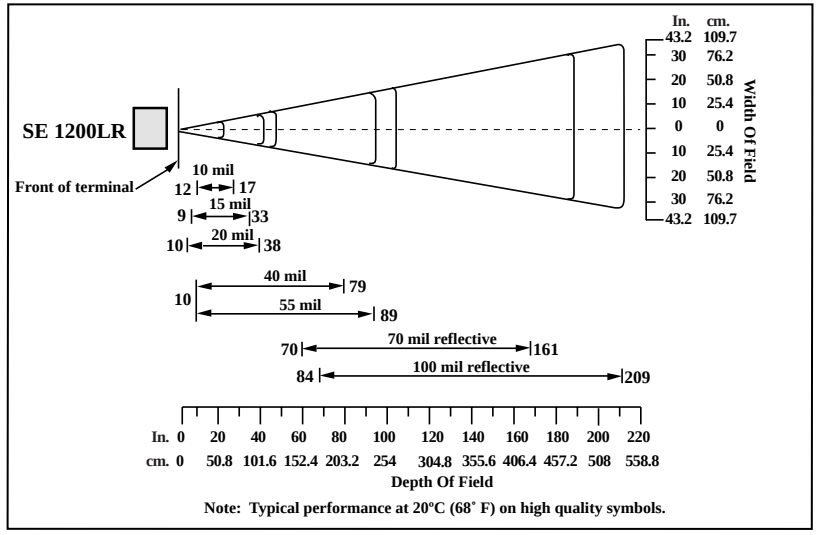

Figure 8.3 Decode Zone, Long Range

8.10 Power Management (7035 Only)

BIOS Compatibility — Advanced Power Management (APM) BIOS Interface Specification, Rev 1.2.

8.10.1 Power Save States

System power states are based on the APM definitions.

APM Enabled — The terminal is in full power state. All functions are active and system power is managed. The “link” indicator is displayed in uppercase letters, showing that the radio is running at full power.

APM Standby	The terminal is in low power state with most devices in low power mode. The “link” indicator is displayed in lowercase letters, showing that the radio is in low power state. The CPU clock is slowed or stopped. The system state is fully retained, and the terminal returns to APM Enabled (full power) state quickly when, for example, the operator presses a key or scans a bar code. This state is not evident to the operator.
APM Suspend	The terminal enters Suspend state from APM Standby state after a configurable period of inactivity. The terminal also enters Suspend state when the <BLUE> <ENTER> key combination is pressed to turn the terminal off. In this state, the 7035 appears to be off. While the system context and memory are saved, the communication link is down and the terminal display is blank. To return to APM Enable state, the <ENTER/ON> key must be pressed. Returning to full power state takes approximately 4 seconds.
Off	The terminal enters the Off state from APM Suspend state after a configurable timeout. The terminal is completely powered off with no CPU context or memory contents saved. Only the real-time clock is maintained. To return to the APM Enabled state, the <ENTER/ON> key must be pressed. The system runs through a complete reset/reboot sequence.

8.11 Lithium-Ion Battery Pack (7035 Only)

Technology	Lithium-Ion (Li-Ion)
Supported packs	P.N. 20605 P.N. 20605-001 P.N. 20605-002

Battery pack P.N. 20605

Charge temperature	0˚ C to 45˚ C (32˚ F to 113˚ F).
Discharge temperature	-20˚ C to 60˚ C (-4˚ F to 140˚ F).

Battery pack P.N. 20605-001

Charge temperature	10˚ C to 45˚ C (50˚ F to 113˚ F).
Discharge temperature	-20˚ C to 60˚ C (-4˚ F to 140˚ F).

Battery pack P.N. 20605-002

Charge temperature	10˚ C to 45˚ C (50˚ F to 113 ˚ F).
Discharge temperature	-20˚ C to 60˚ C (-4˚ F to 140˚ F).

Lifespan	Pack performance does not degrade below 70% of nominal under typical daily use over 2 years. (Based on 3 charge/discharge cycles every 2 days and 250 working days/year.)
Charge Cycles	Minimum of 750 charge cycles.
Charge Time	Fast charge typically in 2.5 hours.
Performance Monitor	Identifies the need for pack replacement.
Voltage	7.2 V nominal (6.0 V to 8.4 V maximum)
Capacity	1350 mAh at 7.2 V nominal
Weight	115 g nominal
Temperature Range	-20˚ C to 60˚ C (-4˚ F to 140˚ F)
Battery Life	8 hours minimum at 23˚ C (73.4˚ F) with back-light on 5%, 5 scan transactions per minute, TESS emulation, TRX7370 radio. Based on typical 1 year cell degradation.
Supported Chargers	Model #7967 – 6-gang custom charger Model #7942 – In-unit charger

Memory	No memory effect.
Battery Gauge	Indicates remaining capacity, 0 to 100%, resolution 10%. Nominal capacity of battery pack is displayed as a reference.
Graceful Power Fail	Operator is notified when battery capacity is low.

APPENDIX A

SUPPORT SERVICES AND WORLDWIDE OFFICES

A.1 Support Services

Teklogix provides a complete range of product support services to its customers. In North America, these services can be accessed through the Teklogix Helpdesk. The Helpdesk coordinates repairs and training, helps you to troubleshoot problems over the phone and arranges for technicians or engineers to come to your site. These services are also available through our Worldwide Offices.

A.1.1 North American Helpdesk

Technical Support

Voice: 1 800 387-8898

Fax: 1 905 812-6304

E-mail: helpdesk@teklogix.com

Repair Services

Voice: 1 800 387-8898

Fax: 1 905 812-6304

E-mail: rma@teklogix.com

Web Site: http://service.teklogix.com

A.1.2 International Support

For support outside of North America, please contact your local Teklogix office. See page 3 for a current listing of worldwide Teklogix offices.

TEKLOGIX

A.2 WorldWide Offices

World Headquarters And Canadian Service Centre

Teklogix Inc.
2100 Meadowvale Boulevard
Mississauga
Ontario
Canada L5N 7J9
Tel: +1 905 813 9900
Fax: +1 905 812 6300
Email: salescdn@teklogix.com

North American Headquarters And U.S. Service Centre

Teklogix Corp.
1810 Airport Exchange Boulevard
Suite 500
Erlanger, Kentucky
USA 41018
Tel: +1 606 371 6006
Fax: +1 606 371 6422
Email: salesusa@teklogix.com

International Subsidiaries

Teklogix GmbH
Jakob Kaiser Straße 3
D-47877 Willich Münchheide
Deutschland
Tel: +49 2154 9282 0
Fax: +49 2154 9282 59
Email: info@teklogix.de

Teklogix S.A.
Parc Club Du Golf Bâtiment 1
13856 Aix-en-Provence
Cedex 3, France
Tel: +33 4 4224 5740
Fax: +33 4 4239 4632
Email: tekeuro@teklogix.com

Teklogix LTD.
3, Lancaster Court
Coronation Road High Wycombe
Bucks HP123TD
England
Tel: +44 1494 450666
Fax: +44 1494 450155
WWW: www.teklogix.co.uk
Email: tekuk@teklogix.com

Teklogix AB
Stora Badhusgatan 18-20
411 21 Göthenburg
Sweden
Tel: +46 31 13 15 50
Fax: +46 31 13 57 80
Email: info@teklogix.se

Teklogix Finland
Metsänneidonkuja 8
02130 Espoo
Finland
Tel: +358 9 4307 8390
Fax: +358 9 4307 8395
Email: tekeuro@teklogix.com

Teklogix Danmark
Vesterballevej 4-6
7000 Fredericia
Danmark
Tel: +45 76 24 0133
Fax: +45 75 94 4679
Email: tedk@teklogix.com

Teklogix Italia S.r.l
Via Galilei, 47
20092 Cinisello Balsamo
Milan, Italy
Tel: +39 2 6604 5410
Fax: +39 2 6604 5412
Email: tkxitalia@teklogix.com

Teklogix Inc. (Singapore)
583 Orchard Road
15-01 Forum
Singapore 238884
Tel: +65 735 8108
Fax: +65 733 5990
Email: intl@teklogix.com

Teklogix de Mexico, S.A. de C.V.
Sierra Mojada 626, 2º Piso
Col. Lomas Barrilaco, C.P. 11010
Mexico, D.F., Mexico
Tel: +52 5 327 1124
Fax: +52 5 327 1123
Email: salesusa@teklogix.com

Teklogix do Brasil, Ltda.
Al. Casa Branca, 851 - conj. 101 e 102
São Paulo - SP - 01408-001
Brasil
Tel: +55 11 3064 0868
Fax: +55 11 3068 8198
WWW: www.teklogixbrasil.com.br
Email: tekbr@teklogix.com

Chile Teklogix International Inc.
Avenida Vitacura 2909, Oficina 703
Las Condes
Santiago, Chile
Tel: +56 2 334 9344
Fax: +56 2 233 3868
Email: ventas@teklogix.com

Teklogix de Argentina, S.A.
Avenida Morceau de Justo 1180
Piso 1, Oficina C-105
Buenos Aires 1107
Argentina
Tel: +54 11 4343 0193
Fax: +54 11 4343 6310
Email: tekar@teklogix.com

Teklogix España, S.L.
Cityparc Ronda de Dalt
Ctra. Hospitalet 147-149
Edificio Atenas 2° 3ª
08940 Cornellà de Llobregat (Barcelona)
España
Tel: +34 9 3475 0220
Fax: +34 9 3475 0230
Email: teklogix@apdo.com

Teklogix Systems India Pvt. Ltd.
M-74, 1st Floor, "M" Block Market
Greater Kailash-II
New Delhi - 110048
India
Tel: +91 11 621 9257
Fax: +91 11 621 9076
Email: tekind@teklogix.com

A.3 World Wide Web

www.teklogix.com

APPENDIX B

PORT PINOUTS AND CABLE DIAGRAMS

B.1 7035 Peripheral Port I/O Connector (28-Pin PCR)

Function	Pin	Signal Name	Description
Ground	1	GND	Digital ground.
	2	GND	Digital ground.
Audio	3	MIC	Microphone input.
	4	LINE_OUT	Line level audio output
Alarm	5	BEEP	External beeper output.
EMI Shield	6	SHIELD	Digital ground.
Diagnos-tic Mode	7	DIAG	Input. If grounded at power up, causes terminal to enter diagnostic mode. Menu allows flash-ROM upgrade and other test modes.
Non-Decoded Scanner	8	SCNR_ENABLE	Output enable to initiate external scan engine.
	9	SCNR_ACK	Output scan acknowledge. Currently drives decode LED on external scanner.
	10	SCNR_TRIG	Scanner trigger input.
	11	SCNR_DATA	Scanner undecoded serial data input.
	12	SCNR_SOS	Not used
Serial Port 2 COM 2	13	SERIAL2_RXD	Serial data input RS-232D.
	14	SERIAL2_TXD	Serial data output RS-232D.
Power	15	P7_2V	Switched +7.2V battery power.
	16	P7_2V	Switched +7.2V battery power.

Function	Pin	Signal Name	Description
Scanner Power	17	5V_SCAN_PWR	5 V scanner power (duplicate of pin 18).
	18	5V_SCAN_PWR/TX_KEY	5 V scanner power/transmit monitor signal for radio test.
	19	EXP0	Expansion 0.
	20	CV_OUT	Control voltage output.
Radio Test	21	EXP1	Expansion 1.
	22	EXP2	Expansion 2.
	23	EXP3	Expansion 3.
	24	EXP4	Expansion 4.
Serial Port 1 (COM1)	25	RTS1	Request-to-send (output) RS-232D.
	26	CTS1	Clear-to-send (input) RS-232D.
	27	SERIAL1_TX	Serial transmit data RS-232D.
	28	SERIAL1_RX	Serial receive data RS-232D.

A.1 7035 Peripheral Port I/O Connector (28-pin PCR)

B.2 8255/60 Peripheral Port I/O Connector (28-Pin PCR)

Function	Pin	Signal Name	Description
Ground	1	GND	Digital ground.
	2	GND	Digital ground.
Audio	3	MIC	Microphone input.
	4	LINE_OUT	Line level audio output
Alarm	5	BEEP	External beeper output.
EMI Shield	6	SHIELD	Digital ground.
Diagnos-tic Mode	7	DIAG	Input. If grounded at power up, causes terminal to enter diagnostic mode. Menu allows flash-ROM upgrade and other test modes.

Function	Pin	Signal Name	Description
Non-Decoded Scanner	8	SCNR_ENABLE	Output enable to initiate external scan engine.
	9	SCNR_ACK	Output scan acknowledge. Currently drives decode LED on external scanner.
	10	SCNR_TRIG	Scanner trigger input.
	11	SCNR_DATA	Scanner undecoded serial data input.
	12	SCNR_SOS	Not used
Serial Port 2 COM 2	13	SERIAL2_RXD	Serial data input RS-232D.
	14	SERIAL2_TXD	Serial data output RS-232D.
Power	15	12V	Unswitched 12VDC, 500 mA fuse.
	16	12V	Unswitched 12VDC ,500 mA fuse.
Scanner Power	17	12V_SCAN_PWR	12 V switched scanner power.
	18	5V_SCAN_PWR	5 V switched scanner power.
	19	NC	NC
	20	CV_OUT	Control voltage output.
	21	5V_Ext	5V unswitched, 500 mA fuse.
	22	BXT_Data	For Teklogix use only.
	23	NC	NC
	24	BXT_CLK	For Teklogix use only.
Serial Port 1 (COM1)	25	RTS1	Request-to-send (output) RS-232D.
	26	CTS1	Clear-to-send (input) RS-232D.
	27	SERIAL1_TX	Serial transmit data RS-232D.
	28	SERIAL1_RX	Serial receive data RS-232D.

A.2 8255/8260 Peripheral Port I/O Connector (28-Pin PCR)

B.3 8255/60 - Expansion Port I/O Connector (36-Pin PCR)

Function	Pin	Signal Name	Description
Battery	1	GND	System ground.
	2	GND	System ground.
Voice	3	MIC	Microphone input.
	4	SPKR	Speaker output.
Ground	5	SHIELD	System ground.
	6	EXP_PORT 0	Reserved for future expansion.
Ground	7	GND	System ground.
	8	EXP_PORT 1	Reserved for future expansion.
Ground	9	GND	System ground.
	10	EXP_PORT 2	Reserved for future expansion.
Ground	11	GND	System ground.
	12	EXP_PORT 3	Reserved for future expansion.
Ground	13	GND	System ground.
	14	EXP_PORT 4	Reserved for future expansion.
	15	EXP_PORT 5	Reserved for future expansion.
Ground	16	GND	System ground.
	17	EXP_PORT 6	Reserved for future expansion.
	18	RTS_2	EXP_PORT_COM1
–	19	CTS_2	EXP_PORT_COM1
–	20	TXD_2	EXP_PORT_COM1
–	21	RXD_2	EXP_PORT_COM1
Power	22	8.0V	8V output. 500 mA fuse.
	23	8.0V	8V output. 500 mA fuse.
Alarm	24	BEEP	External beeper output.

Function	Pin	Signal Name	Description
EMI Shield	25	SHIELD	System ground.
	26	EXP_PORT 7	Reserved for future expansion.
	27	EXP_PORT 8	Reserved for future expansion.
	28	EXP_PORT 9	Reserved for future expansion.
	29	Keyboard GND	For Teklogix use only.
	30	Keyboard 5 V	For Teklogix use only.
	31	Keyboard CLK	For Teklogix use only.
	32	Keyboard Data	For Teklogix use only.
RS-232 Port 1	33	RTS_B	Output handshake signal for RS-232 port 1 to processor.
	34	CTS_B	Input handshake signal for RS-232 port 1 to processor.
	35	TX_DATA_B	Output data for RS-232 port 1 to processor.
	36	RX_DATA_B	Input data for RS-232 port 1 to processor.

A.3 8255/8260 Expansion Port I/O Connector (36-Pin PCR)

B.4 Internal Scanner Connector

Pin	Signal Name	Description
1	SHIELD	Chassis ground.
2	5V_SCAN_PWR	5 V scanner power, software switched.
3	RANGE_LIMIT/TARGET DOT	Enables range limiter function to improve bar code discrimination at short distances (output, active low) for standard range 7035. Enables aim dot for 7035 LR (long range).
4	LASER_ENABLE	Enables scanner laser (output, active low) – generates aim dot.
5	SCAN_ENABLE	Scanner enable (output, active low) – enables scan motor.
6	SCAN_DATA	Scanner data (input).
7	SCAN_SOS	Start-of-Scan (input).
8	GROUND	Digital ground.
9	GROUND	Digital ground.
10	SHIELD	Chassis ground.

A.4 Internal Scanner Connector

B.5 Flash Serial Download Cable

Pin	Signal Name	Description
1	GND	System ground.
2	KEY_CONFIG. 0	System ground.
6	SHIELD	Shield ground.
7	BOOT_MON_EXT	If held low at Power ON, terminal enters BOOT menu.
13	SCNR_SERIAL_IN	Serial data receive signal.
14	SCNR_SERIAL_OUT	Serial data transmit signal.

A.5 Download Cable

B.6 28-Pin PCR To 8-Pin DIN Connector — P.N. 19726

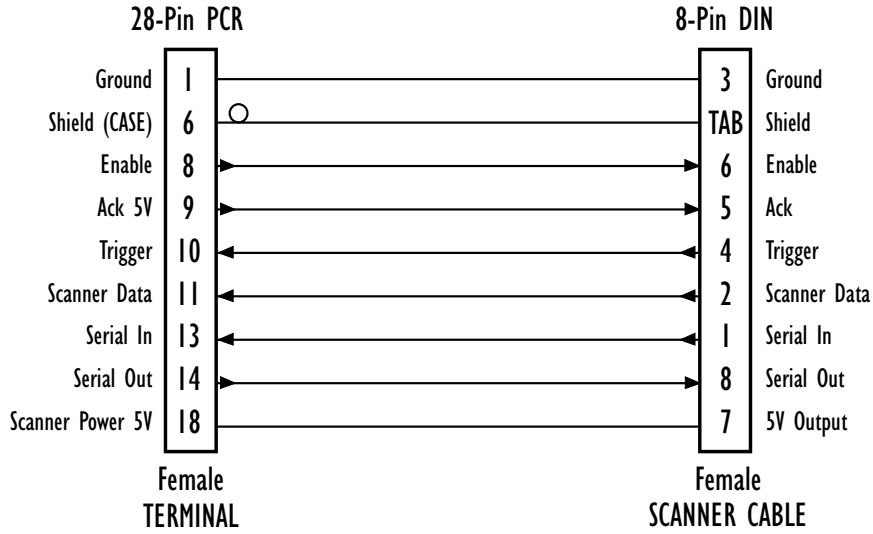

B.7 28-Pin PCR To 7-Pin DIN Connector — P.N. 19727

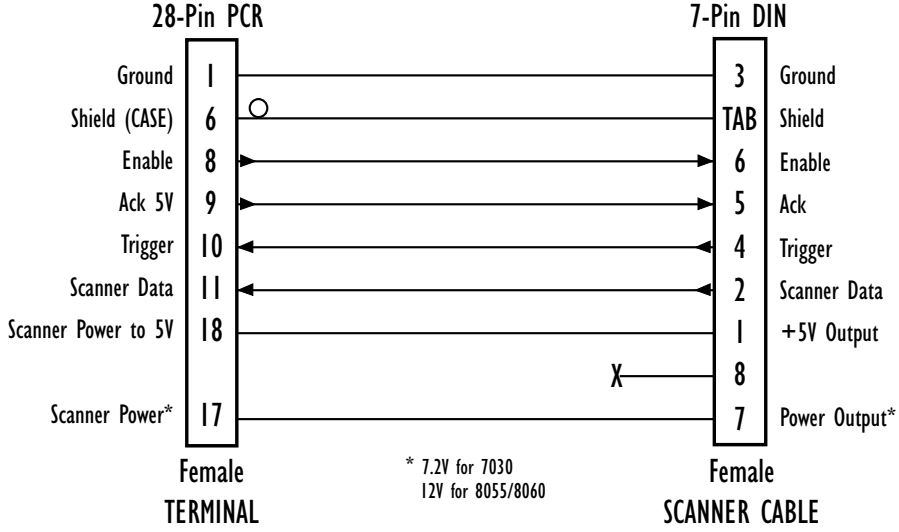

B.8 Flash Serial Download Cable — P.N. 20075

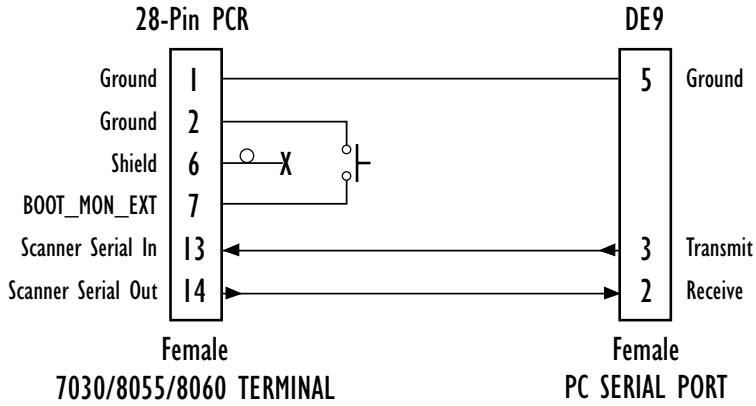

B.9 Scanner Wand Adaptor Cable — P.N. 30092

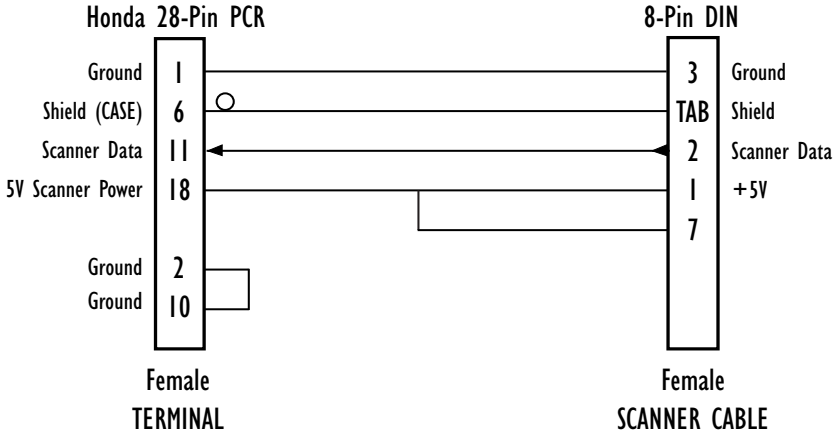

APPENDIX C

ASCII CHARACTER TABLE

BINARY	DEC	ASCII	HEX
0000 0000	0	NUL	00
0000 0001	1	SOH	01
0000 0010	2	STX	02
0000 0011	3	ETX	03
0000 0100	4	EOT	04
0000 0101	5	ENQ	05
0000 0110	6	ACK	06
0000 0111	7	BELL	07
0000 1000	8	BS	08
0000 1001	9	TAB	09
0000 1010	10	LF	0A
0000 1011	11	VT	0B
0000 1100	12	FF	0C
0000 1101	13	CR	0D
0000 1110	14	SO	0E
0000 1111	15	SI	0F
0001 0000	16	DLE	10
0001 0001	17	DC1	11
0001 0010	18	DC2	12
0001 0011	19	DC3	13
0001 0100	20	DC4	14
0001 0101	21	NAK	15
0001 0110	22	SYN	16
0001 0111	23	ETB	17
0001 1000	24	CAN	18
0001 1001	25	EM	19
0001 1010	26	SUB	1A
0001 1011	27	ESC	1B
0001 1100	28	FS	1C
0001 1101	29	GS	1D

BINARY	DEC	ASCII	HEX
0001 1110	30	RS	1E
0001 1111	31	US	1F
0010 0000	32	Space	20
0010 0001	33	!	21
0010 0010	34	“	22
0010 0011	35	#	23
0010 0100	36	$	24
0010 0101	37	%	25
0010 0110	38	&	26
0010 0111	39	‘	27
0010 1000	40	(	28
0010 1001	41	)	29
0010 1010	42	*	2A
0010 1011	43	+	2B
0010 1100	44	,	2C
0010 1101	45	-	2D
0010 1110	46	.	2E
0010 1111	47	/	2F
0011 0000	48	0	30
0011 0001	49	1	31
0011 0010	50	2	32
0011 0011	51	3	33
0011 0100	52	4	34
0011 0101	53	5	35
0011 0110	54	6	36
0011 0111	55	7	37
0011 1000	56	8	38
0011 1001	57	9	39
0011 1010	58	:	3A
0011 1011	59	;	3B

BINARY	DEC	ASCII	HEX
0011 1100	60	<	3C
0011 1101	61	=	3D
0011 1110	62	>	3E
0011 1111	63	?	3F
0101 0000	64	@	40
0101 0001	65	A	41
0101 0010	66	B	42
0101 0011	67	C	43
0101 0100	68	D	44
0101 0101	69	E	45
0101 0110	70	F	46
0101 0111	71	G	47
0101 1000	72	H	48
0101 1001	73	I	49
0101 1010	74	J	4A
0101 1011	75	K	4B
0101 1100	76	L	4C
0101 1101	77	M	4D
0101 1110	78	N	4E
0101 1111	79	O	4F
0101 0000	80	P	50
0101 0001	81	Q	51
0101 0010	82	R	52
0101 0011	83	S	53
0101 0100	84	T	54
0101 0101	85	U	55
0101 0110	86	V	56
0101 0111	87	W	57
0101 1000	88	X	58
0101 1001	89	Y	59
0101 1010	90	Z	5A
0101 1011	91	[	5B
0101 1100	92	\	5C
0101 1101	93	]	5D
0101 1110	94	^	5E
0101 1111	95	_	5F
0110 0000	96	‘	60
0110 0001	97	a	61
0110 0010	98	b	62

BINARY	DEC	ASCII	HEX
0110 0011	99	c	63
0110 0100	100	d	64
0110 0101	101	e	65
0110 0110	102	f	66
0110 0111	103	g	67
0110 1000	104	h	68
0110 1001	105	i	69
0110 1010	106	j	6A
0110 1011	107	k	6B
0110 1100	108	l	6C
0110 1101	109	m	6D
0110 1110	110	n	6E
0110 1111	111	o	6F
0111 0000	112	p	70
0111 0001	113	q	71
0111 0010	114	r	72
0111 0011	115	s	73
0111 0100	116	t	74
0111 0101	117	u	75
0111 0111	118	v	76
0111 0111	119	w	77
0111 1000	120	x	78
0111 1001	121	y	79
0111 1010	122	z	7A
0111 1011	123	{	7B
0111 1100	124	|	7C
0111 1101	125	}	7D
0111 1110	126	~	7E
0111 1111	127		7F
1000 0000	128	Ç	80
1000 0001	129	ü	81
1000 0010	130	é	82
1000 0011	131	â	83
1000 0100	132	ä	84
1000 0101	133	à	85
1000 0110	134	å	86
1000 0111	135	ç	87
1000 1000	136	ê	88
1000 1001	137	ë	89

BINARY	DEC	ASCII	HEX
1000 1010	138	è	8A
1000 1011	139	ï	8B
1000 1100	140	å	8C
1000 1101	141	ì	8D
1000 1110	142	Ä	8E
1000 1111	143	Å	8F
1001 0000	144	É	90
1001 0001	145	æ	91
1001 0010	146	Æ	92
1001 0011	147	ô	93
1001 0100	148	ö	94
1001 0101	149	ò	95
1001 0110	150	û	96
1001 0111	151	ù	97
1001 1000	152	ÿ	98
1001 1001	153	Ö	99
1001 1010	154	Ü	9A
1001 1011	155	¢	9B
1001 1100	156	£	9C
1001 1101	157	¥	9D
1001 1110	158	P	9E
1001 1111	159	ƒ	9F
1010 0000	160	á	A0
1010 0001	161	í	A1
1010 0010	162	ó	A2
1010 0011	163	ú	A3
1010 0100	164	ñ	A4
1010 0101	165	Ñ	A5
1010 0110	166	ª	A6
1010 0111	167	º	A7
1010 1000	168	¿	A8
1010 1010	169	_	A9
1010 1010	170		AA
1010 1011	171	∫	AB
1010 1100	172	π	AC
1010 1101	173	¡	AD
1010 1110	174	«	AE
1010 1111	175	»	AF
1011 0000	176		B0

BINARY	DEC	ASCII	HEX
1011 0001	177		B1
1011 0010	178		B2
1011 0011	179		B3
1011 0100	180		B4
1011 0101	181		B5
1011 0110	182		B6
1011 0111	183		B7
1011 1000	184		B8
1011 1001	185		B9
1011 1010	186		BA
1011 1011	187		BB
1011 1100	188		BC
1011 1101	189		BD
1011 1110	190		BE
1011 1111	191		BF
1100 0000	192		C0
1100 0001	193		C1
1100 0010	194		C2
1100 0011	195		C3
1100 0100	196		C4
1100 0101	197		C5
1100 0110	198		C6
1100 0111	199		C7
1100 1000	200		C8
1100 1001	201		C9
1100 1010	202		CA
1100 1011	203		CB
1100 1100	204		CC
1100 1101	205		CD
1100 1110	206		CE
1100 1111	207		CF
1101 0000	208		D0
1101 0001	209		D1
1101 0010	210		D2
1101 0011	211		D3
1101 0100	212		D4
1101 0101	213		D5
1101 0110	214		D6
1101 0111	215		D7

BINARY	DEC	ASCII	HEX
1101 1000	216		D8
1101 1001	217		D9
1101 1010	218		DA
1101 1011	219		DB
1101 1100	220		DC
1101 1101	221		DD
1101 1110	222		DE
1101 1111	223		DF
1110 0000	224		E0
1110 0001	225	ß	E1
1110 0010	226		E2
1110 0011	227		E3
1110 0100	228		E4
1110 0101	229		E5
1110 0110	230	µ	E6
1110 0111	231		E7
1110 1000	232		E8
1110 1001	233		E9
1110 1010	234		EA
1110 1011	235		EB
1110 1100	236		EC
1110 1101	237		ED
1110 1110	238		EE
1110 1111	239		EF
1111 0000	240		F0
1111 0001	241		F1
1111 0010	242		F2
1111 0011	243		F3
1111 0100	244		F4
1111 0101	245		F5
1111 0110	246		F6
1111 0111	247		F7
1111 1000	248		F8
1111 1001	249		F9
1111 1010	250		FA
1111 1011	251		FB
1111 1100	252		FC
1111 1101	253		FD
1111 1110	254		FE
1111 1111	255		FF

BINARY: 128 | 64 | 32 | 16 | 8 | 4 | 2 | 1
OCTAL: 512 | 64 | 8 | 1
HEX: 256 | 16 | 1

APPENDIX D

RADIO PARAMETERS

Important: ***Radio parameters should not be changed from their factory settings without a clear understanding of your system.***

D.1 TRX7430 WaveLAN/IEEE 802.11 DS SS Radio Parameters

802.11 DS SS		Range
ESSID	TEKLOGIX	see text
Station		see text
AP Density	Low	see text
Data Rate	Auto	see text
Reservation	2347	0-2347
Pwr Saving	Y»	see text
Network	Infra	Infra, Adhoc
Channel	1	1-14
CIS Data	»	see text

Important: ***Changes to these parameters will not take effect until the terminal is reset by pressing and holding down the <BLUE> key and the <ENTER/ON> key for a minimum of six seconds.***

ESSID

The ESSID (Extended Service Set Identifier) is a string of characters, to a maximum of 32, that the terminal uses to determine with which access points it can communicate. The terminal will only communicate with access points configured with the same ESSID. If a value is not assigned for this parameter or if “ANY” is entered, the terminal will communicate with any available access point.

Station

The value entered in this parameter, to a maximum of 32 characters, is used to identify the terminal (an 802.11 station) for diagnostic purposes.

AP Density

This parameter determines the density of access points in a network. The density can be set to one of the following: Low, Medium or High.

Data Rate

The value entered in this parameter specifies the data rate to be used for message transmission. The data rate can be set to one of the following: 1Mbit, 2Mbit or Auto.

Reservation

"Reservation" specifies the medium reservation setting to be used. The medium reservation specifies the number of octets in a message or fragment above which a RTS/CTS handshake is performed to reserve the medium for the message or fragment transmission. Setting this parameter to the maximum allowable value, 2347, disables medium reservation.

Pwr Saving

When this parameter is enabled (set to "Y"), the radio operates in power saving mode, utilizing the parameters listed in this sub-menu.

Pwr Saving		Range
RX Multicasts	N	Y/N
Sleep Duration	100	1-65535

Rx Multicasts

When this parameter is set to "Y", the terminal wakes from a sleep or suspend state each time a multicast – a broadcast sent to multiple recipients from a single packet – is sent over the network. "Rx Multicast" should be left disabled (set to "N").

Sleep Duration

The value assigned for this parameter determines how many milliseconds must pass before the terminal enters a full power state from a suspend state in order to check for messages. If none exist, the terminal returns to suspend state.

Important: ***If this parameter is set at too high a value, you risk missing messages sent over the network.***

Network

The value assigned for this parameter – Infra or Adhoc – configures the radio to operate in either an Ad Hoc ("Adhoc") or Infrastructure ("Infra") network. In an Ad Hoc network, terminals pass data **directly** to other terminals – an access point is not required. In an Infrastructure network, terminals must pass data through an access point – terminals **cannot** communicate directly with other terminals in the network.

Channel

Important: ***The "Channel" parameter takes effect only when the "Network" parameter is set to*** `Adhoc`***.***

The channel number you choose must be the same for all terminals on the network that are set to `Adhoc`.

CIS Data

```
CIS Data
Lucent Technologies
WaveLAN/IEEE
Version 01.01
00:60:1D:03:79:E5
10 - FCC-USA
20 - Industry Canada
```

This sub-menu displays Card Information Structure (CIS) data, manufacturer information describing the radio installed in your terminal.

D.2 TRX7440 RangeLAN 802.11 FH SS Radio Parameters

802.11 FH SS		Range
ESSID	TEKLOGIX	see text
Hop Set	1	1-3
Hop Pattern	1	1-26
Pwr Saving	Y	Y/N
Network	Infra	Infra, Adhoc
Roaming	Y	Y/N
CIS Data	»	see text

Important: ***Changes to these parameters will not take effect until the terminal is reset by pressing and holding down the <BLUE> key and the <ENTER/ON> key for a minimum of six seconds.***

ESSID

The ESSID (Extended Service Set Identifier) is a string of characters, to a maximum of 32, that the terminal uses to determine with which access points it can communicate. The terminal will only communicate with access points configured with the same ESSID. If a value is not assigned for this parameter or if “ANY” is entered, the terminal will communicate with any available access point.

Hop Set

This parameter only takes effect when the terminal is configured for “Adhoc” operation. The “Hop Set” value must be consistent for all stations in the Ad Hoc network.

Hop Pattern

Like the “Hop Set” parameter, this parameter only takes effect when the terminal is configured for “Adhoc” operation. The value assigned for this parameter must be consistent for all stations in the Ad Hoc network.

Pwr Saving

When this parameter is enabled (set to “Y”), the radio operates in power saving mode by default.

Network

The value assigned for this parameter – Infra or Adhoc – configures the radio to operate in either an Ad Hoc (“Adhoc”) or Infrastructure (“Infra”) network. In an Ad Hoc network, terminals pass data **directly** to other terminals – an access point is not required. In an Infrastructure network, terminals must pass data through an access point – terminals **cannot** communicate directly with other terminals in the network.

Roaming

When “Roaming” is set to “Y”, the terminal (802.11 station) can roam from one access point to another. This parameter should only be enabled (set to “Y”) when the radio is configured for Infrastructure network operation.

CIS Data

```
CIS Data
PROXIM
802.11 PC CARD
RANGELAN802
STATION
```

This sub-menu displays Card Information Structure (CIS) data, manufacturer information describing the radio installed in your terminal.

D.3 TRX7370 Narrow Band Radio Parameters

TRX7370		Range
Cellular	Y »	see text
Channel	»	see text
Poll Timing	»	see text
Power Saving	Y »	see text
CIS Data	»	

Important: ***Changes to these parameters will not take effect until the terminal is reset by pressing and holding down the <BLUE> key and the <ENTER/ON> key for a minimum of six seconds.***

D.3.1 Cellular

Cellular		Range
Radio Address	0	0-3840

Radio Address

Important: ***"Radio Address" only takes effect when "Cellular" is enabled (set to "Y").***

The value entered in the "Radio address" parameter is used to identify the terminal over the radio link. A unique value from 1 to 3840 must be assigned for each terminal.

D.3.2 Channel

Channel		Range
Channel #	1	1-20
Power-up chan	Y	Y/N
Channel Enable	»	see text
Switch speed	Slow	Fast/Slow
Manual table	N»	see text

Channel

This parameter determines the operating radio channel of the terminal. The channel selected must be an enabled channel. Refer to “Channel Enable” on page C-7 for details about enabling channels.

Power-Up Chan

If this parameter is enabled (set to “Y”), the terminal will start communicating on the channel specified in the “Channel #” parameter when the terminal is powered up. This setting may prevent the migration of terminals to the same channel due to uneven coverage in some sites. If this parameter is disabled (set to “N”), the terminal will continue communicating on the same channel that it was on before it was turned off.

Channel Enable

Chan enable		Range
CH 1 enable	Y	Y/N
•		
•		
•		
CH 20 enable	Y	Y/N

These parameters are used to enable (Y) or disable (N) up to 20 channels – the maximum number of channels supported by the TRX7370 radio. Enabling a channel allows the channel to be set to an operating channel (“Channel #”) and also makes the channel available for channel searching. If, for example, the operating channel is 1 and all other channels are enabled, the terminal may roam through all 20 channels. Note that the “Channel Enable” menu only displays channels that have been configured with frequencies.

Switch Speed

This parameter changes the threshold the terminal uses to determine when communication quality with a base station is unacceptable. When this threshold is exceeded, the terminal starts channel searching for a new base station.

Setting this parameter to “Slow” means a higher threshold – the terminal is more tolerant of poor communication quality. When the communication quality of the terminal radio drops below 46%, the terminal monitors the channel quality for 15 time-out periods before searching for a new channel.

If “Switch speed” is set to “Fast”, the current channel is monitored for only up to 2 time-out periods before channel switching begins.

Important: ***“Fast Switch” is most effective where coverage areas are largely overlapping. If the coverage areas barely overlap, have dead spots, or if the terminal frequently operates on the fringe of coverage, this parameter should be set to “Slow”.***

Manual Table

```
Manual Table
CH  1 list      0  0  0  0  0  0  0  0
•
•
•
CH 20 list      0  0  0  0  0  0  0  0
```

This parameter can be used to set the channel search order the terminal will use if communication quality drops and channel switching is required. If this parameter is left at the default setting of “N”, the terminal uses a standard algorithm to decide which channel it should switch to in the event of poor channel quality.

If “Manual Table” is set to “Y”, the terminal uses the channel switching lists specified in the Manual Table. Each channel list consists of up to 8 channels, with all channels enabled before they are entered into the “Manual Table”. If communication quality falls below 46%, only the channels entered in the “Manual Table” are considered for channel switching. The channel search is carried out in the order in which the channels were entered in the table.

To move the cursor to the right to the next channel in a channel list:

- Press the <TAB> key.

To move the cursor to the left in a channel list:

- Press <SHIFT><TAB>.

Warning: ***It is not recommended that the "Manual table" parameter be used without a clear understanding of how to order the channel sequences for optimum performance.***

D.3.3 Poll Timing

Poll Timing		Range
Sync Delay	17	1-40
Window Delay	19	1-40
Poll Timeout	20	1-40
Late Tx Limit	2	1-10

Sync Delay

Important: ***This parameter should not be changed from its factory setting without a clear understanding of radio protocol timing.***

"Sync delay" specifies the delay between the time of the base station transmission and the first response window, measured in milliseconds. The value assigned to this parameter must be compatible with other terminals and base stations in the system. The default setting of 17 is based on the requirements of a 2 level modulation narrow band radio, operating at 9600 baud.

Window Delay

Important: ***The value assigned to this parameter should not be changed from the factory setting without a clear understanding of the timing of the radio protocol.***

This parameter specifies the amount of time (in milliseconds) the terminal should add to each response window in order to accommodate the receive/transmit switching characteristics of the radio. The value assigned must be compatible with other terminals and base stations in the system. The default setting of 19 is based on the requirements of a 2 level modulation narrow band radio, operating at 9600 baud.

Poll Timeout

This parameter (in units of 16.6 ms) sets the time-out value used for automatic channel switching. “Poll Timeout” is the time during which the terminal should hear at least one poll from a base station. As each “Poll Timeout” passes without a successful poll from the base station, the terminal channel quality decreases. If the channel quality falls to below 46%, the terminal begins searching for a new channel.

Late Tx Limit

The value entered for this parameter (measured in milliseconds) sets the maximum allowable deviation time from the start of a response window during which a terminal can make a transmission. After this threshold, the transmission will not be attempted and the terminal will try again at the next opportunity. For example, suppose this parameter is set to 5. From the beginning of the response window, the terminal can be up to 5 milliseconds late sending a transmission. Beyond this threshold, the transmission is not attempted. The terminal waits for the next opportunity.

D.3.4 Power Saving

Power Saving		Range
Idle Poll Limit	10	1-200
Pwr Off Time	10	1-60

Idle Poll Limit

This parameter determines how many transmit opportunities – base station polls with available response windows – must be consecutively skipped for the terminal to put the radio into power-down mode for power saving. Lower values cause the terminal to go into power saving mode quickly, extending battery life but reducing terminal responsiveness. Higher values increase responsiveness but decrease battery life. “Idle Poll Limit” is only used when “Power Saving” is enabled (set to “Y”).

Pwr Off Time

This parameter determines the amount of time (in seconds) the terminal will keep the radio in power-down mode when a power down period has been initiated. “Pwr Off Time” is only used when “Power Saving” is enabled (set to “Y”).

D.3.5 CIS Data

This sub-menu displays Card Information Structure (CIS) data, manufacturer information describing the radio installed in the terminal.

D.4 TRX7410/10A WLAN 902 Spread Spec Radio Parameters

WLAN 902 SS	Range
Radio Address 0	0-3840
Channel »	see text
Wlan Timing »	see text
Power Saving Y »	see text
CIS Data »	

Radio Address

The value entered in the “Radio address” parameter is used to identify the terminal over the radio link. A unique value from 0 to 3840 must be assigned for each terminal.

D.4.1 Channel

Channel	Range
Channel # 1	1-7
Power-up chan Y	Y/N
Channel Enable »	see text
Channel Auto »	see text

Channel

This parameter determines the operating radio channel of the terminal. The channel selected must be an enabled channel. Refer to “Channel Enable” on page D-7 for details about enabling channels.

Power-Up Chan

If this parameter is enabled (set to “Y”), the terminal will start communicating on the channel specified in the “Channel #” parameter when the terminal is powered up. This setting may prevent the migration of terminals to the same channel due to uneven coverage in some sites. If this parameter is disabled (set to “N”), the terminal will continue communicating on the same channel that it was on before it was turned off.

Channel Enable

```
Chan enable          Range
CH  1 enable    Y     Y/N
•
•
•
CH 7 enable     Y     Y/N
```

These parameters are used to enable (Y) or disable (N) up to 7 channels – the maximum number of channels supported by the 902 spread spectrum radio. Enabling a channel allows the channel to be set to an operating channel (“Channel #”) and also makes the channel available for channel searching. If, for example, the operating channel is 1 and all other channels are enabled, the terminal may roam through all 7 channels. Note that the “Channel Enable” menu only displays channels that have been configured with frequencies.

Channel Auto

```
Chan Auto            Range
Next ch-auto    1     0-7
•
•
•
Next ch-auto    7     0-7
```

These parameters are available in the “Chan-auto” sub-menu. “Next ch-auto” determines the order of the auto-switched channels. In the first “Next ch-auto” parameter, enter the number of the first channel to which you want the terminal to consider switching. In the next parameter, enter the next channel, and so on. Enter “0” (zero) for no channel.

D.4.2 WLAN Timing

WLAN Timing		Range
Reinit tmo	10	5-20

Reinit tmo

"Reinit tmo" controls how soon a terminal sends a warm initialize message to the controller when a cellular acknowledgement is not received for a previously sent message. This parameter operates in units of seconds and is set to 10 by default.

D.4.3 Power Saving

Power Saving		Range
PwrON time	0	0-20
PwrOFF time	0	0-20
PwrON xmit	0	1-20

PwrON time

This parameter is used in conjunction with "PwrOFF time" to control the duration of time the radio stays on after a message is sent (twice this period if application data is sent). "PwrON time" is in units of 1/2 seconds. The range is 0 to 20 and increases the radio on time in increments of 0.5 seconds. "PwrON time" should be set from 8 to 20 for 902 MHz radios.

Important: ***Using power saving in Wireless LAN will affect system performance since terminals cannot receive routing information when the radio is turned off, and will thus be slower to hop to new routes. Therefore, the "PwrON time" parameter should not be set lower than 5.***

PwrOFF time

This parameter is used in conjunction with “PwrON time” to reduce the power consumption of the radio. The terminal turns off for this period of time, and following the power off time, turns on for a very short period of time to determine if the terminal is still on-line. If the terminal is on-line, it is turned off for the “PwrOFF time”. If the terminal is off-line, it is re-initialized and stays on for the “PwrON time”.

In cellular mode, the radio turns off for twice this period after all channels have been checked and no suitable channel is found. This parameter is in units of 1/2 seconds. To disable this parameter, set it to zero.

PwrON xmit

This parameter determines the amount of time the radio stays on after a transmission, waiting for a response from the base station.

Important: ***If the value in the “PwrON Xmit” is set too low, the terminal may miss the response from the base station, resulting in a lock-up for the user. This parameter needs to be set between 2 and 20 depending on the response time of the system. For example, if the host responds slowly, the value in this parameter should be set to a higher value.***

D.4.4 CIS Data

This sub-menu displays Card Information Structure (CIS) data – that is manufacturer information describing the radio installed in your terminal.

D.5 TRX7460 Mobitex Radio

Mobitex		Range
Controller MAN	5000735	see text
CIS Data	»	see text
Radio Mode	Normal	see text

Controller MAN (Mobitex Subscription Number)

This is the “Mobitex Subscription Number” (MAN) – the *address* of the 9450 Network Controller with which your terminal communicates. It is a factory assigned value.

CIS Data

```
CIS Data
ERICSSON
Mobidem
MASC/4
R6A
```

This sub-menu displays Card Information Structure (CIS) data, manufacturer information describing the radio installed in your terminal.

Radio Mode

This parameter offers two options – Normal and Battery Saving. When “Normal” is selected, Power Saving is turned off. When “Battery Saving” is selected, the terminal radio is powered down while not in use to slow battery consumption. It will periodically “wake up” to check for incoming information. Keep in mind, however, that choosing this option results in slower response times.

INDEX

Boldface indicates a parameter name, as it appears on the terminal

A

aborts, radio link (ra) *56*
accessories
  antenna types *170*
  bar code readers, connecting *159*
  part numbers *179*
  picker cradle (7035) *171*
  7942 in-unit charger *163*
  7967 battery pack charger *167*
Addendum *109, 110, 111, 112*
addresses, network *See also* Network addresses *153*
Adhoc and Infra networks *D-3, D-5*
AIAG
  Mixed AIAG *135*
AIAG Strip *106*
All Fld Video *137*
Alpha parameters *85*
Anchor Column *146*
Anchor Line *146*
Anchor View
  x origin *139*
  y origin *139*
ANSI
  Applications menu *115*
  Auto Wrap *118*
  Auto-Answer *124*
  Columns *118*
  configuration *73*
  Conn Type (connection type) *117*
  CR character *124*
  Dev Attr *123*
  device attribute requests *73*
  Echo Mode *124*
  ENTER key *125*
  Function key equivalents *74*
  Host (Connection Type) *117*
  LF character *124*
  multiple sessions *115*
  Newline *124*
  Pages *117*
  Port *117*
  Rows *118*
  sessions, closing *76*
  sessions, establishing new *75*
  sessions, listing *75*
  sessions, moving between *75*
  settings *116–125*
  TCP Direct connection *117*
  Telnet connection *117*
  Terminal # *116*
  transmitting data *107, 109*
ANSI Settings
  Async In (Serial) *126*
  character sets, choosing *119*
  Connection Type - Telnet & TCP Direct *117*
  keyboard settings *124*
  Screen settings *117*
  Start and End (Serial) *126*
  transmission strings, settings *123*
  Transmit parameters *123*
antenna
  installing on 8255 or 8260 *24*
  installing 7035 *17*
AP Density *D-2*
App. parameter *128*
Append Enter *135*
Append F0 *135*
appending to bar codes
  characters *104, 107, 109*
Applications
  ANSI Settings *116–125*
  Async In (ANSI) *126*
  character attributes (TESS) *129*
  Character Sets (ANSI) *119*
  Character Sets (TESS) *130*

Boldface indicates a parameter name, as it appears on the terminal

Features parameters (TESS) *138*
Fields parameters (TESS) *136*
Host Conn (ANSI) *117*
Host Conn (TESS) *127*
Keyboard parameters (ANSI) *124*
menu (Applications) *115*
Name and **Type** *116*
Scanner parameters (TESS) *134*
Screen parameters (ANSI) *117*
Screen parameters (TESS) *127*
Serial parameters (TESS) *133*
Start and End (ANSI) *126*
TESS Settings *126–134*
Test parameters (TESS) *134*
Transmit parameters (ANSI) *123*
approvals
7035 (including scanner) *188*
8255 *190*
8260 *190*
Ar (area number-Wan) *58*
arrow keys
completing a data field *64, 136*
cycling through special characters *86, 152*
Enh Mode, using *138*
in macros *153*
moving the cursor *32*
Arrows (Scan-See) *149*
ASCII
Full Ascii *105*
matching fields *132*
table *C-1*
Async In *126*
attributes, video *122, 137*
Auto Pan *93*
auto tab fields *64*
Auto Wrap *118*
Auto-Answer *124*
AutoRep Fn *134*
AutoRep T/O *134*

B

Backlight settings
7035 hand-held *94*
8255 & 8260 LCD vehicle-mounts *95*
backspace (CTRL H) *125*
bar code
AIAG *135*
appending to *104, 107, 109*
comparing entry string with decoded bar code *102*
connecting bar code reader *159*
decodes required *103*
decoding edge-to-edge *103*
displaying type of bar code *104*
I 2 of 5 decodes *103*
parameters *105–115*
prefix character *107, 109*
scanner port *159*
Security *103*
Short Code *103*
stripping characters *107, 109*
suffix character *107, 109*
symbologies
Codabar *113*
Code 11 *113*
Code 128 *107*
Code 39 *105–106*
Code 93 *113*
D 2 of 5 *115*
EAN 13 *108*
EAN 8 *110*
I 2 of 5 *114*
MSI/Plessy *114*
UPC A *111*
UPC E *112*
translating *102*
bar code reader
external (specs) *193*
external scanner, operation of *159*
integrated scanner, operation of *46*
internal or integrated (specs) *193*
bar-code-only fields *64*
battery charger *163–170*
fault charge indicator (7942) *165*
fault charge indicator (7967) *168*
mounting bracket (7942) *164*
safety instructions (7967 & 7942) *169–170*
specifications for 7942 *166*
specifications for 7967 *169*

Boldface indicates a parameter name, as it appears on the terminal

7942 in-unit charger *163–167*
7967 gang charger *167–169*
battery charger (7967)
charge complete indicators *165*
battery pack *160–163*
a description of *160*
bar graph (indicating capacity) *42, 49*
battery specs *162*
battery specs (specific to picker cradle) *177*
capacity of *42, 49*
charge time *165, 166*
charging *165*
conditioning *49*
description of *50*
full recharge *166*
gauge (bar graph) *42, 49*
installing *18*
Lithium-Ion safety precautions *160*
maintaining *49*
removing *17*
safety precautions (Lithium-Ion) *161*
time (full charge) *166*
battery *See also* battery pack. *160*
Beam Lockout *135*
Beep Tone and Beep Time *154*
beeper
adjusting volume *43*
adjusting volume using Volume parameter *43*
description of beep conditions *42*
volume adjustment using the BLUE key *43*
bell (CTRL G) *125*
blinking video attribute *122, 137*
BLUE and ORANGE keys, how to use *30*
bold video attribute *122, 137*
Bootp, request for *See* **Employ Bootp** *153*
bootp, request for *See* **Employ Bootp** *154*
Bottom Margin (auto panning) *93*
Brightness (Scan-See) *148*
Bs (base identifier) *58*
Buffer *143*
bytes received (inbyte) *55*
bytes sent (outbyte) *55*

C

cables
extension power cables, installing *25*
installing for 8255 and 8260 *24*
capacity of battery *42, 49*
Card Information Structure - **CIS** *D-3, D-5, D-11, D-15, D-16*
Cellular (NB Radio Address) *D-6*
cellular mode *D-15*
ch (operating channel) *56*
Chan (channel number-WAN) *58*
changing softkey labels *118, 129*
Channel # *D-7, D-12*
Channel (802.11 DS radio) *D-3*
Channel Auto (Next ch-auto) *D-13*
Channel Enable *D-7, D-13*
channel quality (cq), displaying *55*
channel quality, displaying *54, 56*
channels (Narrow Band)
Channel # *D-7*
Channel Enable *D-7, D-13*
Manual Table *D-8*
Power-up chan *D-7*
Switch Speed *D-8*
switching using **Manual Table** *D-8*
channels (902 spread spectrum)
Channel # *D-12*
Channel Auto (Next ch-auto) *D-13*
Channel Enable *D-13*
Next ch-auto (Channel Auto) *D-13*
Power-up chan *D-12*
Char Set (ANSI) *119*
Char Set (TESS) *130*
Character parameters (TESS) *129*
character sets
Chinese Options *121*
choosing in ANSI *119*
choosing in TESS *130*
Code Page *95*
DEC Options *121, 131*
IBM Options *120, 131*
ISO Options *120, 130*
Korean Options *122*
characters

Boldface indicates a parameter name, as it appears on the terminal

appending to bar codes *107, 109*
ASCII table *C-1*
Char Set, choosing (ANSI) *119*
Char Set, choosing (TESS) *130*
Chinese options *121*
Code Page *95*
Custom Chars (ASCII characters-TESS) *140*
cycling through *86, 152*
DEC options, choosing *121, 131*
IBM options, choosing *120, 131*
Invis (TESS) *130*
ISO options, choosing *120, 130*
Korean options *122*
NULL (TESS) *130*
prefix *107, 109*
stripping *107, 109*
suffix *107, 109*
charge time required *166*
charger
charge ready indicator *165*
charge time *165*
failed charge (7942) *165*
failed charge (7967) *168*
full recharge *165*
gang charger (7967) *167–169*
in-unit charger (7942) *163–167*
mounting bracket (7942) *164*
safety instructions (7967 & 7942) *169–170*
specifications for 7942 *166*
specifications for 7967 *169*
time (full charge) *165*
charging batteries *165*
check digit *108, 112, 113, 114, 115*
Chinese char sets *121*
Chinese font sizes *97*
Chk Digit, 1 *113, 114*
Chk Digit, 2 *113*
CIS Data (Card Information Structure) *D-3, D-5, D-11, D-15, D-16*
Click Data (scanner double-click) *104*
Click Time (scanner double-click) *103*
CLR/DEL Key
description of *33*
in Local Echo mode (ANSI) *125*
TESS sessions, CLR key behaviour in *66*
Codabar *113*
Code Page *95*
Code 11 *113*
Code 128 *107*
Code 39 *105–106*
Code 93 *113*
colours, remapping *98*
Column Offset *146*
columns
Column Offset *146*
number of in ANSI screen *118*
number of in TESS screen *127*
Columns (ANSI) *118*
Columns (TESS) *127*
configuring softkey labels *118, 129*
Conn Type (connection type) *117*
connection, host *117, 127*
console port
Scan-See settings *144*
console port settings *142*
Console Settings *141–150*
Console 2 Port Settings
Buffer *143*
Data Bits *142*
disabling *141*
enabling *141*
Input Tmo *143*
Nomad option *141*
Parity *142*
peripheral devices *141*
Print option *141*
Retries *143*
Scanner option *141*
Scan-See option *141*
Speed *142*
Stop Bits *142*
Test *144*
ContNxtField *134*
contrast, adjusting *44, 90*
Controller MAN (Mobitex) *D-15*
country code *108*
cq (channel quality), displaying *54, 55, 56*

Boldface indicates a parameter name, as it appears on the terminal

CR/LF
- LF character *124*
- **Line Offset** *146*
- **Line Scrolling** *148*
- **Newline** *124*

CR/LF, CTRL J *125*
cradle *See also* Picker cradle *171–177*
CTRL commands
- CTRL a *75*
- CTRL f *65*
- CTRL G (Bell) *125*
- CTRL H (Backspace) *125*
- CTRL h (host select) *69*
- CTRL i *65*
- CTRL I (Tab) *125*
- CTRL J (Line Feed) *125*
- CTRL K (Vertical Tab) *125*
- CTRL L *153*
- CTRL L (Form Feed) *125*
- CTRL p (reprint) *69*
- CTRL r *65*
- CTRL s (status,displaying continuously) *69*
- CTRL t (status, display with terminal #) *69*
- CTRL u *65*
- CTRL w (status, display in Lock B & H mode) *69*

CTRL Key *33*
cursor
- **Anchor Column** (Scan-See) *146*
- **Arrows** (Scan-See) *149*
- **Brightness** (Scan-See) *148*
- **Column Offset** (Scan-See) *146*
- **Enh Edit mode** *138*
- **Field Order** *136*
- **Follow Cursor** (Scan-See) *148*
- **Line Offset** (Scan-See) *146*
- **Line Scrolling** (Scan-See) *148*
- linefeed mode (ANSI) *125*
- moving between fields *136*
- Newline mode (ANSI) *125*
- **Panning** (Scan-See) *148*

Custom Chars (ASCII characters-TESS) *140*

D

D 2 of 5 *115*
data
- entering *64, 136*
  - **Ign Bcode_fld** *137*
  - with a bar code reader *159*
- transmitting from the terminal *64, 123, 136*

Data Bits *142*
Data Rate *D-2*
dead zone *195*
DEC char sets *121, 131*
decoding bar codes
- comparing entry string *102*
- decode zone *197*
- decodes required *103*
- **Security** *103*
- **Short Code** *103*

decrementing parameters *84*
Default Gateway *154*
Default Gateway (Gateway IP address) *154*
DEFAULT key (F4) *83*
DEFLT key (F4) *87*
DEL Key (ANSI parameter) *125*
DEL/CLR Key
- description of *33*
- in Local Echo mode (ANSI) *125*
- TESS sessions, DEL key behaviour in *67*

Dev Attri *123*
device attribute requests *73*
digit
- check digit *108, 112, 113, 114, 115*
- number system *111, 112*

disabling/enabling Y/N parameters *85*
display
- **Anchor View** *139*
- **Display ShiftDisplay Shift** *140*
- **Field Scroll** *128*
- font sizes, Chinese and Korean *97*
- font sizes, North American and European *96*
- moving *139*

Boldface indicates a parameter name, as it appears on the terminal

Origin Scroll *128*
positioning *128*
Use Increment *139*
video attributes *122, 137*
X-Increment *139*
X-origin *139*
Y-Increment *139*
Y-origin *139*
display contrast, adjusting *44*
Display menu *81*
Display Menu, accessing and using *28*
DOS, launching and exiting *29*
Dot Time *104*
double-click
appending characters to a decoded bar code *104*
scanner trigger *103*
dropped packets (drppkt) *55*
drppkt (dropped packets) *55*
Duration (key click) *91*

E

EAN 13 *108*
EAN 8 *110*
EAN/UCC 128 *108*
Echo Mode
Host echo *125*
Local echo *125*
Smart echo *124*
edit modes, TESS *65*
Employ Bootp *154*
enabling/disabling Y/N parameters *85*
End (ANSI) *126*
Enh Edit Mode (TESS) *138*
ENTER key
completing a data field *64*
CR/LF character *124*
Enter on Arrows *136*
Local Echo mode (ANSI) *125*
Newline mode (ANSI) *125*
Enter On Arr *136*
Enter To F0 *136*
entry fields *64*
Function keys *136*
hidden match *132*
Ign Bcode_fld *137*
video attributes *122, 137*
visible match *132*
entry mode *136*
Err Accept *106*
Err Func key *132*
error reply message in TESS *132*
Error Tone and Error Time *155*
ESC Key *34*
ESSID *D-1, D-4*
European font sizes *96*
Exp to UPC A *112*
Ext (external scanner types) *101*

F

failed battery charge (7942) *165*
failed battery charge (7967) *168*
Fast Switch, using **Switch Speed** parameter *D-8*
fault condition (battery charging with 7942) *165*
fault condition (battery charging with 7967) *168*
Fcursor mode *65*
Features parameters (for TESS Settings) *138*
Field mode *65*
Field Order *136*
fields
auto-tab fields *64*
bar-code-only fields *64*
completing a data field *64, 136*
Enh Edit mode *138*
entry fields *64*
Field Order *136*
Field Scroll *128*
Field Size *106*
fixed fields *64*
hidden match *132*
Ign Bcode_fld *137*
“insert” mode *136*
match fields *64*
“replace” mode *136*
serial I/O fields *64*
size *106*

Boldface indicates a parameter name, as it appears on the terminal

"transmit on" *64*
video attributes *122, 137*
visible match *132*
Fields parameters (for TESS Settings) *136*
fixed fields *64*
Flow Control *143*
Follow Cursor *148*
Font Size, changing *96*
Font Size, Chinese and Korean *97*
fonts
Chinese *97*
European *96*
Korean *97*
North American *96*
form feed (CTRL L) *125*
Full Ascii *105*
Function keys *36*
accessing F1 to F12 *36*
accessing F13 to F24 *36*
accessing F25 to F36 *37*
ANSI equivalents *74*
completing a data field *64*
entering data *136*
error reply *132*
Open Fky Only *136*
softkey labels, changing *118, 129*
softkeys *36*

G

gang charger (7967) *167–169*
Gateway *See* **Default Gateway** *154*
Gateway, Default *154*
gauge, battery *42, 49*
Global Macros *150–153*
adding special characters *152*
displaying special characters (ASCII) *152*
programming special keys *153*
grey scale, adusting *98*

H

H Match Chr *132*
handstrap, installing on 7035 *19*
helpdesk *A-1*
hidden fields match *132*
Hop Pattern *D-4*
Hop Set *D-4*
Host (ANSI Connection Type) *117*
Host (TESS Connection Type) *127*
Host Connection
ANSI *117*
TESS *127*
Host Echo *125*
host select (CTRL h) *69*

I

I 2 of 5 *114*
I/O fields *64*
IBM char sets *120, 131*
Idle Poll Limit *D-11*
Ign Bcode_fld *137*
In #n *102*
In (Serial In) *133*
inbyte (received bytes) *55*
Inc Country *108*
Inc Num Sys *111, 112*
Include Chk *106, 108, 110, 111, 112, 113, 114*
Include Chk (D 2 of 5 symbology) *115*
Include Chk (I 2 of 5 symbology) *114*
incrementing parameters *84*
indicators *40*
LED functions *39*
onscreen messages *40*
scanner message *46*
inerrs (received packets w errors) *55*
Infra and Adhoc networks *D-3, D-5*
Infrared (IrDA) port, using *48*
initialized messages, transmitted (xi) *56*
inpkts (received packets) *55*
input
bar code reader *159*
bar-code-only fields *64*
Input tmo *143*
"insert" mode *136*
Open Fky Only *136*
"replace" mode *136*
serial I/O fields *64*

Boldface indicates a parameter name, as it appears on the terminal

Input Tmo *143*
Insert mode *65*
"insert" mode *136*
installation
antenna, 7035 *17*
antenna, 8255 and 8260 *24*
battery pack *17–18*
handstrap *19*
pistol grip *19*
8255 and 8260 vehicle-mounts *20*
Int (internal scanner types) *101*
integrated scanner option *46*
Intensity (7035 backlighting) *94*
in-unit charger (7942) *163–167*
Invis characters (TESS) *130*
IP addresses
bootp, requesting *153, 154*
Default Gateway (Gateway IP address) *154*
Employ Bootp (bootp request) *154*
Local IP (terminal IP address) *153*
Net Mask (subnet mask) *153*
IrDA (Infrared) port, using *48*
ISO char sets *120, 130*
ITF Chk (I 2 of 5 symbology) *114*

K

Kbd Locked *138*
Key Click, adjusting Tone and Duration *91*
key lock function
locking and unlocking *34*
One Shot Mode *34*
keyboard
compatibility with VT220 ANSI terminal keyboard *74*
lock *138*
lock messages *69*
locking and unlocking keys *34*
One Shot Mode *34*
Keyboard (vehicle-mounts) *95*
Keyboard mode
Host Echo *125*
Local Echo *125*
Newline *124*
Smart Echo *124*
Keyboard parameters (ANSI) *124*
keys
error reply *132*
keys, locking and unlocking *34*
Korean char sets *122*
Korean font sizes *97*

L

labels, softkey *118, 129*
laser beam *46*
launching
DOS *81*
Parameters menu *81*
Tekterm *81*
LCD Scan-See
parameter settings, default *145*
LED
link indicator *59*
picker cradle indicators *176*
receive *39, 59*
transmit *39, 59*
7035 indicators *59*
7967 Gang Charger *167*
LED Scan-See
parameter settings (default) *145*
Left Margin (auto panning) *93*
LF/CR
LF character *124*
Line Offset *146*
Line Scrolling *148*
Newline *124*
LF/CR, CTRL J *125*
Line Offset *146*
Line Scrolling *148*
Lithium-Ion batteries
charging *165*
description of *160*
installing *18*
maintaining *49*
removing *17*
safety precautions *50, 160*
Local Echo *125*
Local Echo *See* Echo Mode *124*
Local IP *153*
"LOCK–B" message *69, 128*

Boldface indicates a parameter name, as it appears on the terminal

locked keyboard *138*
"LOCK–H" message *69, 128*
locking and unlocking keys *34, 100*
Lucent WaveLAN 802.11
PC card (TRX7430)
parameters (radio) *D-1*
specs *184*
Lucent WaveLAN 802.11
PC card (TRX7431)
specs *184*

M

Macro keys *See also* Global Macros *39*
maintenance *See* terminal maintenance *48*
Manual Table *D-8*
match fields *64*
memory, resetting *87*
messages
error reply in TESS *132*
"LOCK–B" *69, 128*
"LOCK–H" *69, 128*
onscreen indicators *40*
"RESET: Press Enter" *63*
Scan Indication *104*
Scan Result *104*
scanner warning message *47, 104*
messages received (rm) *56*
Mixed AIAG *135*
Mobitex WAN radio (TRX7460) *D-15*
Address (Subscription) Number (MAN) *58*
Ar (Area number) *58*
Bs (base identifier) *58*
Chan (channel number) *58*
MAN (Mobitex Subscription Number) *58*
Mobitex Net *57*
parameters *D-15–D-16*
Rssi (received signal strength) *58*
Rx (Receive radio stats) *59*
specs *186*
State *58*
statistics *57*
Subscription Number (MAN) *58*
Tx (transmit radio stats) *59*
Mod 10 Chk *106*
Mod 10 Chk (D 2 of 5 symbology) *115*
Mod 10 Chk (I 2 of 5 symbology) *114*
Mod 43 Chk *106*
Model 7000
parameter settings, default *145*
Model 7000M
parameter settings, default *145*
mounting cradle
for 8255 terminal *20–22*
for 8260 terminal *23–24*
moving the display *128, 139*
MSI/Plessy *114*
multiple
ANSI sessions *115*
applications *115*
TESS sessions *63, 115*

N

narrow band (TRX7370) radio parameters *D-6–D-11*
narrow band radio (TRX7370) *183, D-6*
Net Mask *153*
Network (Adhoc or Infra) *D-3, D-5*
Network addresses *153*
bootp, requesting *153, 154*
Default Gateway (Gateway IP address) *154*
Employ Bootp *153*
Employ Bootp (bootp request) *154*
Local IP (terminal IP address) *153*
Net Mask (subnet mask) *153*
Newline *124*
Newline *124*
Next ch-auto (Channel Auto) *D-13*
NEXT key (F1) *83*
Nomad
console port settings *141, 144*
North American font sizes *96*
NULL characters (TESS) *130*
number
of columns (ANSI) *118*
of columns (TESS) *127*

Boldface indicates a parameter name, as it appears on the terminal

of pages (ANSI) *117*
of rows (ANSI) *118*
of rows (TESS) *128*
Terminal # (ANSI) *73, 116*
Terminal # (TESS) *63*
number system digit *111, 112*
numeric fields (Rjct if Alpha) *135*
numeric parameters *84*
numeric parameters, minimum/maximum limits to *84*

O

offices list *A-3*
off-line terminal
Power Off Time *D-11*
PwrOFF time *D-15*
On Time (7035 backlight) *94*
On/Off button *26*
onscreen indicators *40–41*
Open Fky Only *136*
Options parameters (for scanning) *102*
ORANGE and BLUE keys, how to use *30*
order of fields in TESS screen *136*
Origin Scroll *128*
Out #n *103*
Out (Serial Out) *133*
outbyte (sent bytes) *55*
outerrs (packet send errors) *55*
outpkts (sent packets) *55*

P

Pack *177*
packet errors, send (outerrs) *55*
packet send errors (outerrs) *55*
packets dropped (drppkt) *55*
packets received (inpkts) *55*
packets sent (outpkts) *55*
packets w errors, received (inerrs) *55*
pages
Columns (ANSI) *118*
Columns (TESS) *127*
Pages (ANSI) *117*
positioning *128*
reprinting *69*
Rows (ANSI) *118*
Rows (TESS) *128*
size/shape *118*
Pages (ANSI) *117*
Pages Saved (TESS) *128*
Palette Remap *98*
Panning (Scan-See) *148*
panning, auto and manual parameters *92–93*
parameters
Alpha parameters *85*
main menu, displaying *88*
numeric *84*
saving changes to *87*
string entry *85, 86, 152*
Y/N (boolean) *85*
Parameters menu, launching and exiting *28*
Parity *142*
parity (Scan-See) *144*
“PASSTHRU” command *141*
PC card, specifications for *183, 184*
peripheral (serial) port *9*
peripheral port I/O connector *159*
peripherals, defining serial connections *141*
picker cradle *171*
cable, connecting *173*
disassembling before mounting *172*
installation *171*
installing cable *173*
LED indicators *176*
maintenance *174*
mounting *173*
port replicator, attaching *174*
power source, connecting *174*
powered 10-55 VDC (model #7937C) *171*
powered 11-16 VDC (model # 7937B) *171*
specifications *177*
unpowered (model # 7937A) *171*
pistol grip, installing on 7035 *19*
pitch, scanning *195*
pmenu, displaying *88*

Boldface indicates a parameter name, as it appears on the terminal

Poll Timeout *D-10*
poll timeouts (pt) *56*
Poll Timing parameters *D-9–D-10*
polls received (rp) *56*
Port (ANSI Connection Type) *117*
Port (TESS Connection Type) *127*
port replicator (picker cradle) *174*
ports
  ANSI Connection Type *117*
  Buffer *143*
  console settings *141*
  Console 2 settings *141*
  Data Bits *142*
  Flow Control *143*
  Input tmo *143*
  Parity *142*
  Retries *143*
  Scan-See settings *144*
  serial settings *141*
  Serial 1 settings *141*
  settings *141*
  Speed *142*
  Stop Bits *142*
  TESS Connection Type *127*
  Test *144*
  XON & XOFF (Scan-See) *150*
  7035 terminal *9*
position
  of screen *128*
power
  Idle Poll Limit *D-11*
  Power Down *99*
  Power Off *100*
  Power Off Time *D-11*
  power save states *197*
  Pwr Saving *D-5*
  PwrOFF time *D-15*
  PwrOFF Xmit *D-15*
  PwrON time *D-14*
  Rx Multicasts *D-2*
  Sleep Duration *D-3*
  Watchdog Timer *99*
Power Down (7035) *99*
Power Off (7035) *100*
Power Off Time *D-11*
power saving parameters
  narrow band *D-11*
  Power Down (7035) *99*
  Power Off (7035) *100*
  spread spectrum 902 MHz *D-12*
  Watchdog Timer *99*
  802.11 direct sequence *D-2*
  802.11 frequency hopping *D-5*
Power-up chan *D-7, D-12*
Prefix (Serial In) *133*
Prefix (Serial Out) *133*
Prefix Char *107, 109*
PREV key (F2) *84*
PREVIOUS key (F2) *83*
printing
  pages *69*
  pass-through *141*
Proxim RangeLAN 802 FHSS 2.4GHz PC card
  parameters (radio) *D-4*
  specs *183*
pt (poll timeouts) *56*
punctuation marks, accessing (SHIFT Key) *31*
Pwr Saving *D-5*
Pwr Saving (802.11 DS) *D-2*
PwrOFF time *D-15*
PwrOFF Xmit *D-15*
PwrON time *D-14*

R

ra (received radio link aborts) *56*
radio
  Address (Subscription) Number (MAN) *58*
  AP Density *D-2*
  Ar (Area number) *58*
  Bs (base identifier) *58*
  cellular mode *D-15*
  Chan (channel number) *58*
  Channel (802.11 DS radio) *D-3*
  CIS Data (Card Information Structure) *D-3, D-5, D-11, D-15, D-16*

Boldface indicates a parameter name, as it appears on the terminal

Controller MAN (Mobitex) *D-15*
Data Rate *D-2*
ESSID *D-1, D-4*
Hop Pattern *D-4*
Hop Set *D-4*
MAN (Mobitex Address Number) *58*
MAN (Mobitex Subscription Number) *58*
Mobitex Net *57*
Mobitex statistics screen *57*
Network (Adhoc or Infra) *D-3, D-5*
parameters *D-1–D-16*
power saving parameters *D-14–D-15*
Pwr Saving *D-5*
Pwr Saving (802.11 DS) *D-2*
Radio Mode (Mobitex) *D-16*
Reservation *D-2*
resetting statistics *60*
Roaming *D-5*
Rssi (received signal strength) *58*
Rx (Receive radio stats) *59*
spread spectrum (902) *D-12*
State *58*
Station *D-2*
statistics screen (Mobitex) *57*
statistics screen (narrow band) *56*
statistics screen (802.11 SS) *56*
statistics screen (802.11) *55*
statistics screen, resetting *60*
statistics screen, viewing *54*
statistics, resetting *60*
TRX7370 narrow band *183*
TRX7370 statistics screen *56*
TRX7410 TekLan DS SS 902 MHz radio *183, D-12*
TRX7410A TekLan DS SS 902 MHz radio *183, D-12*
TRX7440 Proxim RangeLAN 802 FHSS 2.4GHz PC card *183*
TRX7460 Mobitex WAN radio *D-15*
Tx (transmit radio stats) *59*
WLAN 902 spread spectrum *D-12*
802.11 SS statistics screen *56*
802.11 statistics screen *55*
Radio Address (narrow band) *D-6*
Radio Address (902 spread spectrum) *D-12*
radio link aborts received (ra) *56*
Radio Mode (WAN) *D-16*
radio statistics screen *54*
Address Number (MAN) *58*
Ar (Area number) *58*
Bs (base identifier) *58*
Chan (channel number) *58*
MAN (Mobitex Address Number) *58*
Mobitex *57*
Mobitex Net *57*
Rssi (received signal strength) *58*
Rx (Receive radio stats) *59*
State *58*
TRX7370 *56*
Tx (transmit radio stats) *59*
802.11 *55*
802.11 SS *56*
radio statistics screen, resetting *60*
RangeLAN 802 PC card (TRX7440 Proxim)
parameters *D-4*
specs *183*
received bytes (inbyte) *55*
received messages (rm) *56*
received packets (inpkts) *55*
received packets w errors (inerrs) *55*
received polls (rp) *56*
received radio link aborts (ra) *56*
Reinit tmo (902 wireless LAN) *D-14*
Replace mode *65*
“replace” mode *136*
replicator, port (picker cradle) *174*
reprinting a page *69*
Reservation *D-2*
“RESET: Press Enter” message *63*
resetting
default parameter values *87*
terminal memory *87*
retransmissions (xr) *56*
Retries *143*
reverse video attribute *122, 137*
Right Margin (auto panning) *93*
Rjct if Alpha *135*

Boldface indicates a parameter name, as it appears on the terminal

rm (received messages) *56*
Roaming *D-5*
rows
  number of in ANSI screen *118*
  number of in TESS screen *128*
Rows (ANSI) *118*
Rows (TESS) *128*
rp (received polls) *56*
Rssi (received signal strength) *58*
RS-232 port *6*
Rx (Receive radio stats-Wan) *59*
Rx Multicasts (Pwr Saving) *D-2*

S

safety instructions
  battery charger (7967 & 7942) *169–170*
  general *xi*
  scanner *46*
safety warning, scanner *46*
SAVE key (F3) *83*
Save key (F3) *36*
sc (scan state) *56*
SCAN Key *34*
scan state (sc) *56*
Scan Tone and Scan Time *155*
scanner
  Append Enter *135*
  Append F0 *135*
  appending data *104*
  bar code, appending data to *104*
  Click Data (appending data) *104*
  Click Time (double-click) *103*
  ContNxtField *134*
  Dot Time *104*
  double-click *103*
  laser beam *46*
  operating *46*
  parameters (for TESS Settings) *134*
  safety warnings *46*
  Scan-See *144*
  specifications *194*
  target dot duration *104*
  TESS Scanner parameters *134*
  Type (of scanner) *101*
  warning message *47, 104*
scanning
  AIAG *135*
  Append Enter *135*
  Append F0 *135*
  appending characters *104, 107, 109*
  check digit *108, 112, 113, 114, 115*
  Click Data (appending data) *104*
  Click Time *103*
  console port labelling *141*
  ContNxtField *134*
  country code *108*
  decode zone *197*
  Dot Time *104*
  double-click *103*
  Ext (external)scanner
    Ext (external scanner types) *101*
  identifying the type of scanner used *101*
  In (translate) *102*
  Int (internal)scanner
    Int (internal scanner types) *101*
  locked terminal *135*
  Nomad *141, 144*
  number system digit *111, 112*
  operating the scanner *46*
  Out (translate) *103*
  pitch *195*
  prefix character *107, 109*
  removing characters *107, 109*
  Rjct if Alpha *135*
  safety instructions *46*
  Scan Indication *104*
  Scan Result *104*
  Scan-See *141, 144–149*
  Scan-See, configuring port for *144*
  Security *103*
  serial port labelling *141*
  Short Code *103*
  skew *195*
  specular dead zone *195*
  suffix character *107, 109*
  symbologies *105*
  target dot duration *104*

Boldface indicates a parameter name, as it appears on the terminal

techniques *46, 48*
TESS Scanner parameters *134*
Translate bar code *102*
trouble-shooting tips *47*
Type (of scanner) *101*
Verify *103*
warning message *46*
Scan-See
configuring port for *144*
console port settings *141, 144*
display, mapping to viewport *145*
parameters *144–149*
port, configuring *144*
serial number *144, 149*
version *144*
viewport, mapping display to *145*
Screen (8255 & 8260 LCD backlighting) *95*
Screen parameters
ANSI *117*
TESS *127*
screens
Anchor View *139*
Columns (ANSI) *118*
Columns (TESS) *127*
Display Shift *140*
Field Scroll *128*
moving between fields *136*
Origin Scroll *128*
page size/shape *118, 127*
positioning *128*
Rows (ANSI) *118*
Rows (TESS) *128*
Use Increment *139*
X- and Y-origin *139*
X-Increment *139*
Y-Increment *139*
scrolling
Field Scroll *128*
Origin Scroll *128*
Scan-See *148*
Security *103*
select host (CTRL h) *69*
sent bytes (outbytes) *55*
sent packets (outpkts) *55*
serial (peripheral) port *9*
serial I/O fields *64*
serial number (Scan-See) *144, 149*
Serial parameters (for TESS Settings) *133*
serial port *6*
In (Serial In) *133*
Out (Serial Out) *133*
pass-through *141*
Prefix (Serial In) *133*
Prefix (Serial Out) *133*
Suffix (Serial In) *133*
Suffix (Serial Out) *134*
serial port settings *142*
Serial Settings *141–150*
Serial 1 Port Settings
Buffer *143*
Data Bits *142*
disabling *141*
enabling *141*
Flow Control *143*
Input Tmo *143*
Output option *141*
Parity *142*
peripheral devices *141*
Print option *141*
Retries *143*
Scanner option *141*
Speed *142*
Stop Bits *142*
Test *144*
service information *A-1*
sessions
windows, cycling through *54*
setting the terminal number *63*
SHIFT Key *31*
Short Code (bar code option) *103*
size
of fields *106*
Size/Chars (bar code scanning) *106*
skew, scanning *195*
Sled *See* picker cradle. *171*
Sleep Duration (Pwr Saving) *D-3*
Smart Echo *124*
softkeys (Function keys) *83*
F1 - Next key *36*

Boldface indicates a parameter name, as it appears on the terminal

F2 - Previous key *36*
F3 - Save key *36*
F4 - Default key *36*
softkey labels, changing *118, 129*
Sound parameters (error and scan beeps) *154*
SPACE Key *34*
special keys, programming into macros *153*
specifications
battery *187, 199*
battery pack (Li-Ion) *162*
battery pack (specific to picker cradle) *177*
COM 1 *191*
COM 2 *191*
CPU *187*
cradle, picker *177*
for 7035 terminal *186*
memory expansion *187, 189, 192*
picker cradle *177*
radio specs *183–186*
scanner *194*
specular dead zone *195*
Speed *142*
spread spectrum (902) radio parameters *D-12–D-15*
spread spectrum radio (902) *D-12*
Standard *107*
Start and End (ANSI) *126*
start up menu *81*
State (Wan) *58*
Station *D-2*
statistics (radio) *54*
statistics (radio), resetting *60*
statistics screen
Address Number (MAN) *58*
Ar (Area number) *58*
Bs (base identifier) *58*
Chan (channel number) *58*
MAN (Mobitex Address Number) *58*
Mobitex Net *57*
Mobitex radio *57*
Mobitex WAN radio (TRX7460) *57*
narrow band radio (TRX7370) *56*
Rssi (received signal strength) *58*
Rx (Receive radio stats) *59*
spread spectrum radio (TRX7370) *56*
State *58*
TRX7370 narrow band radio *56*
TRX7370 radio *56*
TRX7370 spread spectrum radio *56*
TRX7460 Mobitex WAN radio *57*
Tx (transmit radio stats) *59*
802.11 radio *55*
802.11 SS radio *56*
status, displaying continuously *69*
status, displaying in Lock B & Lock H mode *69*
status, displaying terminal # *69*
Stop Bits *142*
string entry parameters *85, 86, 152*
adding special characters to *86*
cycling through special characters *86*
key function description *85*
Strip Leading *107, 109*
Strip Trailing *107, 109*
sub-menus, accessing *84*
subnet mask (**Net Mask**) *153*
Suffix (Serial In) *133*
Suffix (Serial Out) *134*
Suffix Char *107, 109*
support services *A-1*
Switch Speed *D-8*
symbologies, bar code *105*
displaying type of bar code *104*
Sync Delay *D-9*
System menu *90*

T

tab (CTRL I) *125*
TAB Key *34*
tab, vertical (CTRL K) *125*
TCP Direct connection *117, 127*
TekLan (TRX7410) *183, D-12*
TekLan (TRX7410A) *183, D-12*
TekLan 902 MHz DS SS (TRX7410) *183, D-12*

Boldface indicates a parameter name, as it appears on the terminal

TekLan 902 MHz DS SS (TRX7410A) *183, D-12*
Tekterm
- exiting *60*
- launching *53*
- radio statistics screen, displaying *54*
- radio statistics, resetting *60*
- statistics (radio) *54*
- statistics (radio), resetting *60*
- working with application session windows *54*

Tekterm, bypassing to Display Menu *28*
Tekterm, launching and exiting *29*
Telnet connection *117, 127*
terminal
- off-line terminal *D-15*
- **Terminal #** (ANSI) *116*

Terminal # (ANSI) *116*
Terminal # (TESS) *126*
terminal maintenance
- battery (7035) *49*
- cleaning *48*
- 7035 (special instructions) *49*

TESS
- **All Fld Video** *137*
- **Append Enter** *135*
- **Append F0** *135*
- Applications menu *115*
- **AutoRep Fn** *134*
- **AutoRep T/O** *134*
- **Blink** (video attrib.) *137*
- **Bold** (video attrib.) *137*
- CLR key behaviour *66*
- **Columns** *127*
- configuration *63*
- **ContNxtField** *134*
- CTRL commands *65*
- cursor movement (in edit modes) *65*
- **Custom Chars** (ASCII characters) *140*
- DEL key behaviour *67*
- edit modes *65*
- **Enh Edit Mode** *138*
- **Enter On Arr** *136*
- **Enter To F0** *136*
- **Entry ModeEntry Mode** *136*
- error reply message *132*
- Fcursor mode *65*
- Features parameters *138*
- Field mode *65*
- **Field Order** *136*
- Field parameters *136*
- **Host (Connection Type)** *127*
- **Ign Bcode_fld** *137*
- **In** (Serial In) *133*
- Insert mode *65*
- **Invis** characters *130*
- **Kbd Locked** *138*
- keyboard lock *138*
- matching fields via data stream *132*
- modes (edit) *65*
- multiple sessions *115*
- **NULL** characters *130*
- number of columns in screen *127*
- number of rows in screen *128*
- **Out** (Serial Out) *133*
- **Pages Saved** *128*
- pass-through *141*
- **Port** *127*
- **Prefix** (Serial In) *133*
- **Prefix** (Serial Out) *133*
- query command *128*
- Replace mode *65*
- **Reverse** (video attrib.) *137*
- **Rows** *128*
- running multiple sessions *63*
- selecting a session *63*
- settings *126–134*
- **Suffix** (Serial In) *133*
- **Suffix** (Serial Out) *134*
- **Terminal #** *126*
- video attributes *137*

TESS Settings
- character attributes *129*
- character sets, choosing *130*
- Connection Type - Telnet & TCP Direct *127*
- Features parameters *138*
- Fields parameters *136*
- Scanner parameters *134*

Boldface indicates a parameter name, as it appears on the terminal

screen settings *127*
serial parameters *133*
test parameters *134*
Test *144*
Test parameters (for TESS Settings) *134*
Threshold (7035 backlight) *94*
timeout (902 Wlan) *D-14*
timeouts, poll (pt) *56*
Timing parameters *D-9–D-10*
Tone (key click) *91*
Translate, bar code *102*
transmit failures (xe) *56*
Transmit parameters (ANSI) *123*
transmitted messages (xm) *56*
transmitting data *123, 136*
“transmit on” entry field *64*
trigger, double-click *103*
trouble-shooting tips (scanning) *47*
TRX7370 narrow band radio
parameters *D-6*
specs *183*
TRX7410/10A TekLan 902 DS SS radio
parameters *D-12*
specs *183*
TRX7430 Lucent 802.11 DS SS radio
parameters *D-1*
specs *184*
TRX7431 Lucent 802.11 DS SS radio
specs *184*
TRX7440 Proxim RangeLAN 802.11 FH SS radio
parameters *D-4*
specs *183*
TRX7460 Mobitex radio
specs *186*
Tx (transmit radio stats-Wan) *59*
Type (of scanner) *101*
typing in upper case *132*

U

UCC 128 *108*
underline
video attribute *122*
unlocking keys *34, 100*
UPC A *111*
UPC E *112*
Upper Case *132*
Use Increment
X-Increment *139*
Y-Increment *139*
Use increment *139*

V

V Match Chr *132*
Verify *103*
Version (Scan-See) *144, 149*
vertical tab (CTRL K) *125*
VGA palette, remapping *98*
video attributes *122, 137*
All Fld Video *137*
Blink *122, 137*
Bold *122, 137*
Reverse *122, 137*
Underline *122*
viewport (Scan-See display), mapping *145*
visible fields match *132*
Volume *43*
volume, adjusting *90*
VT220 Function keys – equivalent Teklogix keyboard Function keys *74*

W

WAN
Address (Subscription) Number (MAN) *58*
Ar (Area number) *58*
Bs (base identifier) *58*
Chan (channel number) *58*
MAN (Mobitex Subscription Number) *58*
Mobitex Net *57*
Mobitex radio parameters *D-15*
Mobitex radio statistics screen *57*
Rssi (received signal strength) *58*
Rx (Receive radio stats) *59*
State *58*
Tx (transmit radio stats) *59*

Boldface indicates a parameter name, as it appears on the terminal

WAN radio (Mobitex) parameters *D-15–D-16*
warnings *104*
Watchdog Timer *99*
WaveLAN 802 PC card (Lucent TRX7430)
parameters *D-1*
specs *184*
WaveLAN 802 PC card (Lucent TRX7431)
specs *184*
website address *A-4*
Wide Area Network
Ar (Area number) *58*
Bs (base identifier) *58*
Chan (channel number) *58*
MAN (Mobitex Subscription Number) *58*
Mobitex Net *57*
radio parameters *D-15*
radio statistics screen *57*
Rssi (received signal strength) *58*
Rx (Receive radio stats) *59*
State *58*
Subscription (Address) Number (MAN) *58*
Tx (transmit radio stats) *59*
Window Delay *D-10*
wireless LAN (Wlan)
timeout *D-14*
WLAN Timing (Reinit Tmo or 902) *D-14*
WLAN 902 spread spectrum radio *D-12*
Working *54*
worldwide offices *A-3*
Wraparound *148*
wrapping characters, automatically *118*

X

X Increment (manual panning) *93*
x origin *139*
xe (transmit failures) *56*
xi (transmitted initialize messages) *56*
X-Increment *139*
xm (transmitted messages) *56*
Xmit Count *123*
Xmit Wait *123*
XON/XOFF (Scan-See) *150*
X-origin *139*
xr (retransmissions) *56*

Y

Y Increment (manual panning) *93*
y origin *139*
Y/N parameters, enabling and disabling *85*
Y-Increment *139*
Y-origin *139*

1 Chk Digit *113, 114*
2 Chk Digit *113*
7035 picker cradle *See also* Picker Cradle *171–177*
7035 terminal
antenna, attaching *17*
approvals *188*
battery, installing *17*
display *188*
font sizes (LCD), Chinese and Korean *98*
font sizes, North American and European *97*
hand-strap, attaching *19*
pistol grip, attaching *19*
ports *9*
specifications *186*
7937A, unpowered picker cradle *171*
7937B, powered picker cradle (11-16 VDC) *171*
7937C, powered picker cradle (10-55 VDC) *171*
7942 in-unit charger *163–167*
7967 battery charger *167–169*
8255
antenna, attaching *24*
approvals *190*
cables, installing *24*
display *189, 190*
extension power cables, installing *25*
font sizes (LCD), Chinese and Korean *97*

Boldface indicates a parameter name, as it appears on the terminal

font sizes (LCD), North American and European *96*
font sizes (VFD), Chinese and Korean *97*
font sizes (VFD), North American and European *96*
mounting cradle, attaching terminal to *20–22*
8260
antenna, attaching *24*
approvals *190*
cables, installing *24*
extension power cables, installing *25*
font size (for all 8260 terminals) *97*
mounting cradle, attaching terminal to *23*
902 spread spectrum radio parameters *D-12–D-15*