AVERY DENNISON®

Monarch® 9485
Portable Printer
USER MANUAL

AVERY DENNISON®

TC9485UM Rev. AF 12/14

All specifications are subject to change without notice

THE MANUFACTURER IS NOT RESPONSIBLE FOR ANY RADIO OR TV INTERFERENCE CAUSED BY UNAUTHORIZED MODIFICATIONS TO THIS EQUIPMENT. SUCH MODIFICATIONS COULD VOID THE USER'S AUTHORITY TO OPERATE THE EQUIPMENT.

Caution

RISK OF EXPLOSION IF BATTERY IS REPLACED BY AN INCORRECT TYPE.
DISPOSE OF USED BATTERIES ACCORDING TO THE INSTRUCTION

Disposal of Old Electrical&Electronic Equipment(Applicable in the European Union and other European countries with separate collection systems)

This symbol on the product or on its packaging indicates that this product shall not be treated as household waste.
Instead it shall be handed over to the applicable collection point for the recycling of electrical and electronics equipment. For more detailed information about recycling of this product, please contact your local city office, your household waste disposal service or the shop where you purchased the product.

Table of Contents

1. Unpacking	2
2. Product overview	3
3. Installation & Usage	4
3-1. Display	4
3-2. Installing the Battery	5
3-3. Removing the Battery	6
3-4. Charging the Battery	7
3-5. Installing Belt Clip	8
3-6. Stock Installation	9
3-7. Peel Mode	10
3-8. Shoulder Strap Installation	11
3-9. Diagnostic Test	12
4. Peripherals Connection	14
4-1. Wireless Communication	14
4-2. Interface Cable Connection	15
5. Printer Cleaning	16
5-1. PrintHead Cleaning	16
5-2. Platen Roller Cleaning	17
6. Pritner Specification	18
6-1. Specification	18
7. CPCL Command Compatibility	20
8. ZPL Command Compatibility	23

1. Unpacking

Standard

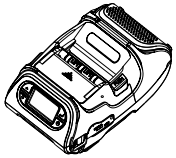

Printer

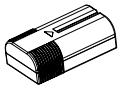

Battery

Belt Clip

Recharger

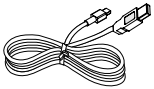

USB Cable

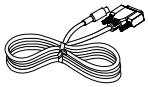

Serial cable

CD

Quick Reference

Optional

Shoulder Strap

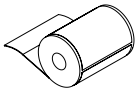

Stock

2. Product overview

Front

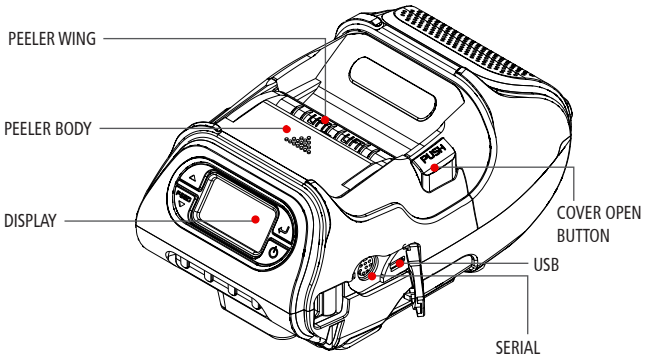

Bottom

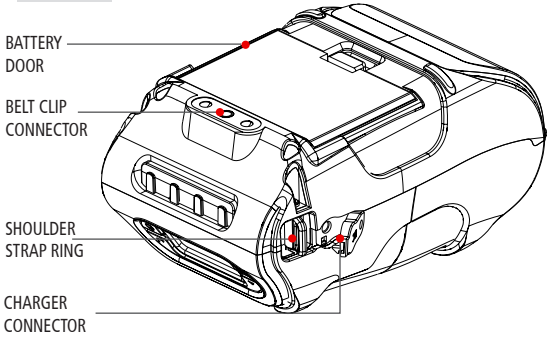

3. Setting Up the Product

3-1. Display

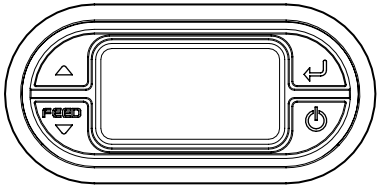

Button	Name	function
FEED ▽	Paper Feed/ Down button	Advances the supply. Clears error message. Moves down through menu options.
↵	Enter button	Selects the highlighted menu option.
△	Up button	Moves up through menu options.
⏻	Power button	Turns the printer on and off. Press to turn power on. Press for three seconds to turn power off. Wakes the printer from sleep mode.

NOTE

1. The battery status LEDs indicate amount of power remaining. Actual run-time remaining depends on factors such as the contents of output, distance to computer, etc.
2. When the battery level is very low, high density printing can result in the printer switching off during printing resulting in possible loss of data.

3-2. Installing the Battery

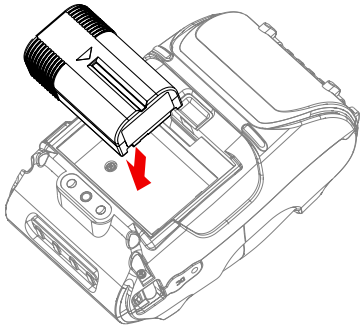

Remove the battery door. Insert the battery as shown.

1
2

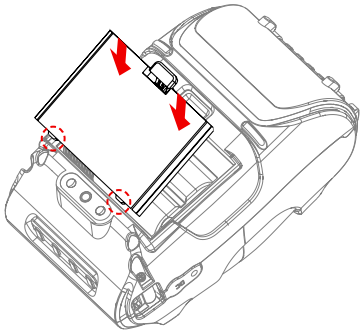

Replace the battery door.

NOTE

You must fully charge the battery when you receive the printer.
Batteries can be charged in the printer or in an optional external cradle

3-3. Removing the Battery

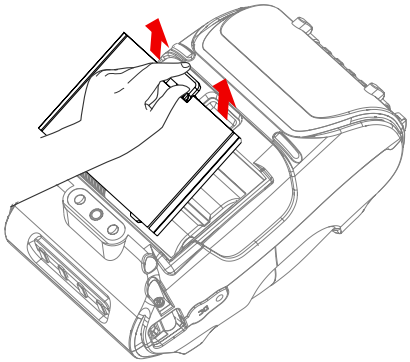

Remove the battery door. Lift out the battery.

3-4. Charging the Battery

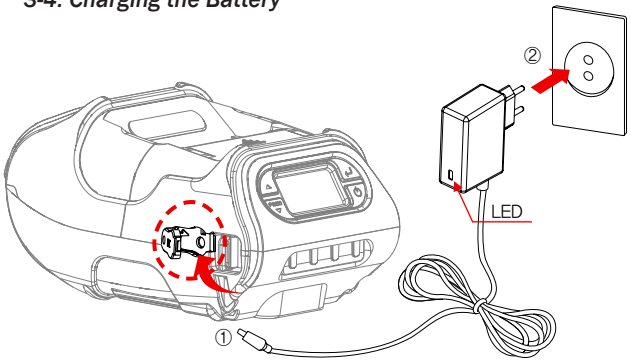

1. Turn off the printer.
2. Be sure that the AC plug is correct.
   If AC plug is wrong, change the plug to the correct one.
3. Open the DC jack by pulling on the rubber cover and insert DC jack into the printer.
4. Plug the AC plug into an electrical outlet.
5. The charge indicator LED (located on the AC charger as shown) shows red or green according to the status.

3-4-1 The status of lamp in charging

Status	charging	charging complete
Charging Lamp	Red	Green

NOTE

If there is trouble while charging the battery, the charge indicator LED blinks green.
Try unplugging and reconnecting charger, charging should resume.
Charging is complete when the LED changes to solid green.

3-5. Belt clip Usage

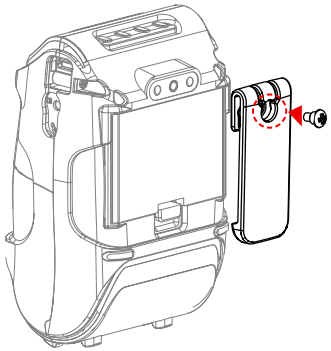

Insert screw into belt clip.

1
2

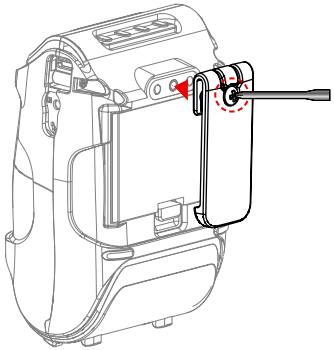

Tighten the screw with driver as shown.

NOTE

The belt clip is included with the printer but is not required to be used or installed!

3-6. Stock Installation

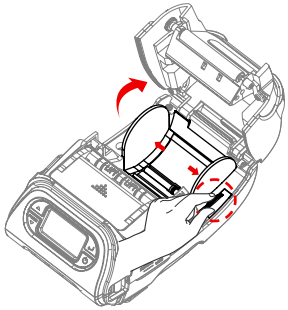

Open the Paper cover by pressing the Open button and set the width of paper guide by turning the knob with finger.

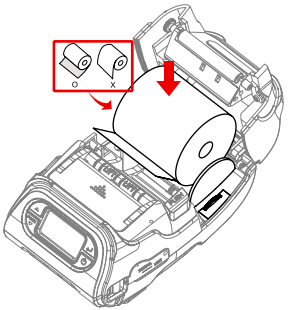

Put the stock in so it unrolls from the bottom. Remove the stock core when it is empty. Pull a short length of stock out of the printer.

1 2
3 4

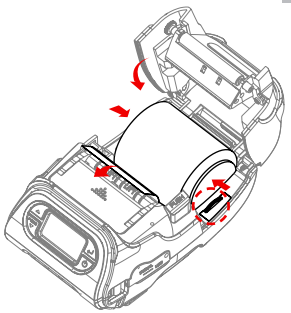

Adjust the width of paper guide if needed.

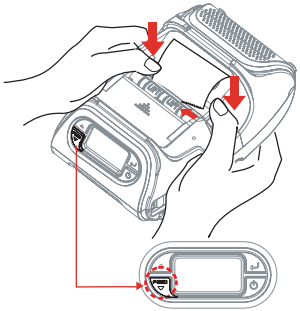

Use two hands to close the cover until it clicks into place. Press the feed button.

3-7. Peel Mode

Peel Mode

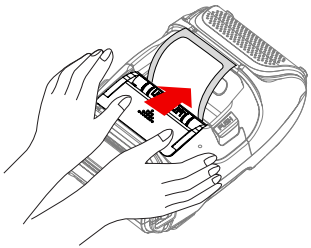

With a roll of stock installed, slide the peeler body towards the back of the printer.

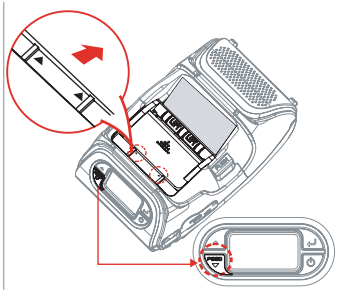

Push the peeler body until you see two complete triangles. Press the feed button.

Non-Peel Mode

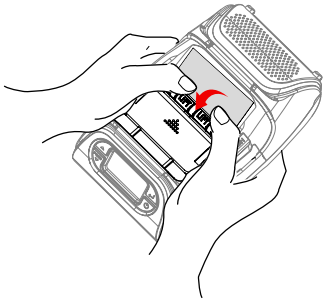

Lift the peeler wing and slide the peeler body towards the front of the printer.

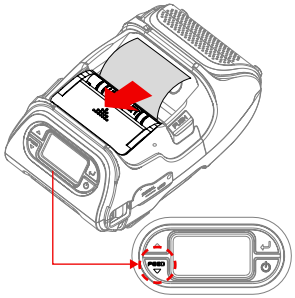

Press the feed button.

3-8. Shoulder Strap Installation

Optional

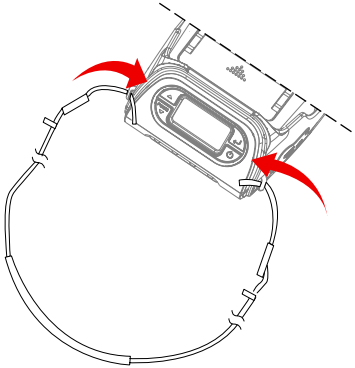

Insert the strap into the hook of the printer.

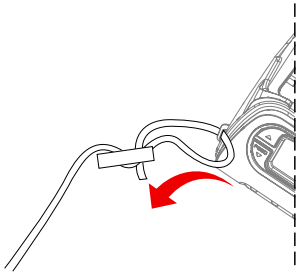

Place the end of the strap into the hook of shoulder strap.

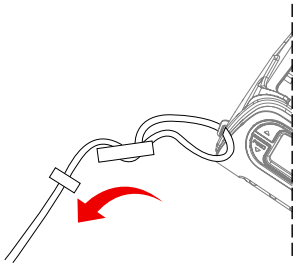

After pulling out the end of the strap tightly, put it into the clip to be fastened.

3-9. Diagnostic Test

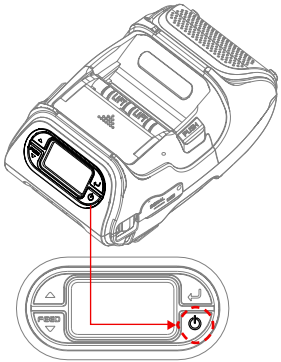

Turn off the printer.

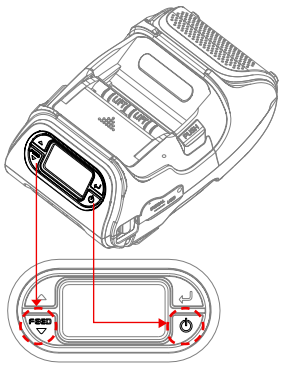

Press and hold the feed button and power button.

1 2 3

The information label prints.

NOTE

1. For Hex Dump mode, do steps 1-2 then press the feed button.
2. After printing ASCII pattern, the diagnostic test is complete.
3. If the feed button is not pressed to go to Hex Dump mode, the printer exits diagnostics after three seconds.

The sample of self test printout

```
AVERY, M9485
Version: V02.4
Emulation: MPCL [BAR]

GAP(Adj):80(-3)
BlackMark Sensor:lower
Battery: 8.4V[15]
Timeout(Sleep):60sec
Ext' Flash: Exist

Serial Interface
Baud: 19200
Data bit: 8bit
Parity Bit: none
Stop bit: 1bit

USB Interface
Version 2.0 Full speed
compliant
Product String: M9485

Wireless Interface
Not Install
*********************
 Press FEED button to
 enter HEX-DUMP mode.
*********************
```

Upon initial installation or for troubleshooting, you can run the diagnostic test to get information about:
Firmware version, emulation, codepage, sensor settings, interface settings, etc.
If no issues are found with diagnostic test, examine other devices and software.
The diagnostic test is working independent of devices and software.

● Do not overheat the motor

To prevent the motor from overheating, stop the printer for at least 30 seconds after continuously printing 1.5 meters.

4. Peripherals Connection

This product can communicate with other devices using Bluetooth, WiFi (802.11b/g), or a USB/Serial cable.

4-1. Wireless Communication

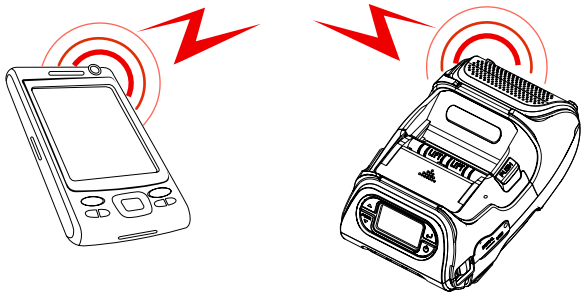

1. Printer can connect to a PDA or PC for wireless communication.
2. Your PC must support Bluetooth or WiFi (802.11b/g) to connect to the printer.

NOTE

Refer to the System Administrator Guide for more information.

4-2. Interface Cable Connection

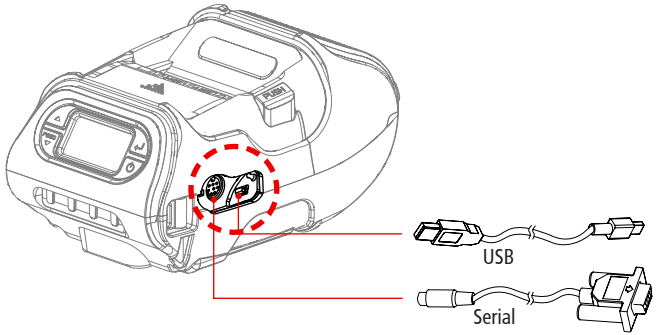

1. Connect the USB or Serial cable to the cable connector on the printer.

NOTE

Use only the cables offered by the printer manufacturer.

2. Connect the interface cable into the USB or Serial port of the device (PDA, PC, etc.)

5. Printer cleaning

If the interior of the printer is dusty, printing quality can be lowered.
In this case, follow the instructions below to clean the printer.

5-1. PrintHead Cleaning

1. Use an applicator swab moistened with an isopropyl alcohol to clean the print head and remove any dust.

2. Once cleaning is complete, allow the printer to dry then install the stock and close the cover.

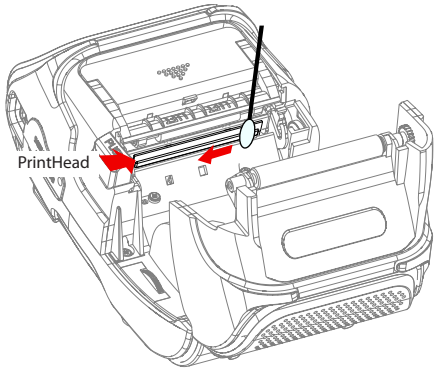

NOTE

1. Make sure to turn the printer power off prior to cleaning
2. The printhead can become very hot during printing; allow the printer approximately 10 minutes to cool before cleaning.
3. Do not touch the printhead, it can be damaged by static electricity.
4. Take care not to allow the print head to become scratched and /or damaged in any way.

5-2. Platen Roller Cleaning

1.Clean the platen roller with a clean soft cloth moistened with isopropyl alcohol or a cleaning pen.

2. Turn the platen roller with your finger to clean the entire surface.

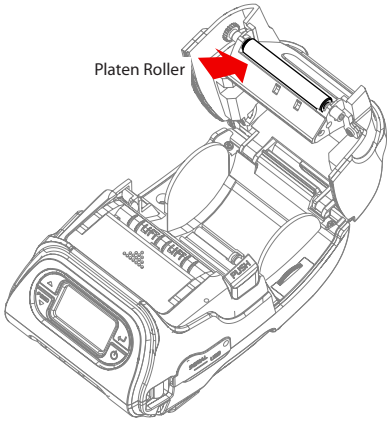

6. Printer Specification

6-1. Specification

Printing Method		Direct Thermal
Printing Speed		80mm/sec
Resolution		203 DPI X 203 DPI
Character		ALPHA NUMERIC Character, Extension Character
Barcode	One-Dimensional Barcodes	UPCA +2/+5, UPCE +2/+5, EAN8 +2/+5, EAN13 +2/+5, EAN 128, Interleaved 2 of 5, Extended Code 39, Codabar (NW7), Code 128, Code 93, PostNet
	Two-Dimensional Barcodes	PDF417, MaxiCode, Aztec, QR Code (Quick Response), Datamatrix
	Stacked One-Dimensional Barcodes	GS1 Databar (RSS or Composite Code)
Emulation		CPCL,MPCL,ZPL
Driver		Window CE 4.2&5.0, Window Mobile 5.0
Sensor		Black-Mark Upper/Lower, Gap, Cover open, Peeler Detect, Peeler S/W, Media-Width Detect
Paper	paper type	Thermal Paper
	width	56mm
	thickness	0.06 ~ 0.18 mm
	External Diameter	Max. Φ 56mm
	Internal Diameter	12.5mm±0.5mm
Reliability	TPH	50km
	Battery	Continuous Printing 54min Standby for 11hours Printing length: 249.8M
Communications	standard	Serial(RS-232C), USB
	Optional	Bluetooth Class2, Wireless Lan *802.11b/g
Print tolerances		Print feeding 22.7mm ±2.2%(±0.5mm)

Battery Charger	input	AC100~240V, 50/60 Hz
	output	8.4V , 800~1200mA
Battery	Battery type	Li-ion
	output	7.4V, 18.9wh
	Charging time	3.7 Hrs Charging
Size	WXDXH(mm)	104 X 85 X 158
	WXDXH"	3.9 X 3.3 X 6.2
Weight		580g (Bluetooth, Wifi not included)
Environmental sealing		IP42
Temperature	operation	5~50℃
	storage	-20~60℃
Humidity	operation	35 ~ 80%
	storage	10 ~ 90%

7. CPCL Command Compatibility

NOTE

Compatible	Compatible with only commanders provided by the manufacturer.	Partially Compatible	Not Compatible
○	●	△	x

Printer Commands	Compatibility
PRINT	○
FORM	○
JOURNAL	○
UNITS	○
USING COMMENTS	○
TEXT	**Compatibility**
TEXT	○
FONT-GROUP(FG)	○
TEXT CONCATENATION	○
MULTILINE(ML)	○
COUNT	○
SETMAG	○
SCALABLE TEXT	**Compatibility**
SCALE-TEXT	○
SCALABLE CONCATENATION	○
LINEAR BARCODES	**Compatibility**
BARCODE	○
BARCODE-TEXT	○
COUNT	○
Two-Dimensional Bar Codes	**Compatibility**
PDF417 (PORTABLE DATA FILE)	○
MICROPDF-417	●
MAXICODE	○
QRCODE	○

DATAMATRIX	●
GS1(RSS-14)	○
AZTEC	○
GRAPHICS	**Compatibility**
BOX	○
LINE	○
INVERSE-LINE	○
PATTERN	○
GRAPHICS	○
PCX	○
Advanced Commands	**Compatibility**
CONTRAST	○
TONE	○
JUSTIFICATION	○
PAGE-WIDTH	○
PACE	○
NO-PACE	○
WAIT	○
SPEED	○
SETSP	○
ON-FEED	○
PREFEED	○
POSTFEED	○
COUNTRY/CODE PAGE	○
FORMAT FILES	○
BEEP	○
Line Print Mode	**Compatibility**
SETLP	○
SETLF	○
Moving With X and Y Coordinates	○
LMARGIN	○

SETBOLD	○
SETSP	○
Special ASCII Characters	○
SETFF	○
SET-TOF	○
SETLP-TIMEOUT	○
ADVANCED UTILITIES	**Compatibility**
VERSION	○
CHECKSUM	○
DEL	○
DIR	○
DEFINE-FILE	○
TYPE	○
BAUD	○
COUNTRY / CODE-PAGE	○
TIMEOUT	○
BEED	○
ON-LOW-BATTERY	○
LT	○
SET-TIME	○
GET-TIME	○
SET-DATE	○
GET-DATE	○
PRINTING A TIME STAMP	○
PRINTING A DATE STAMP	○
PAPER-JAM	○
PRINTER ESCAPE	**Compatibility**
SET AND READ CODE	△
STATUS / INFROMATION	○
USER LABEL COUNT	○
POWER OFF	○

8. ZPL Command Compatibility

Command	Compatibility
^A	○
^B0	○
^B1	○
^B2	○
^B3	○
^B4	○
^B5	○
^B6	○
^B7	○
^B8	○
^B9	○
^BA	○
^BB	○
^BC	○
^BD	○
^BE	○
^BF	○
^BI	○
^BJ	○
^BK	○
^BL	○
^BM	○
^BO	○
^BP	○
^BQ	○
^BR	○
^BS	○
^BT	○
^BU	○

Command	Compatibility
^BX	O
^BY	O
^BZ	O
^CC ~CC	O
^CD	O
^CF	O
^CI	O
^CT ~CT	O
~DF	O
~DG	O
^FB	O
^FC	O
^FD	O
^FH	O
^FN	O
^FO	O
^FP	O
^FR	O
^FS	O
^FT	O
^FV	O
^FW	O
^FX	O
^GB	O
^GC	O
^GD	O
^GE	O
^GF	O
^GS	O

Command	Compatibility
^ID	O
^IL	O
^IM	O
^IS	O
~JR	O
^JS	O
~JS	O
^KL	O
^LH	O
^LL	O
^LR	O
^LS	O
^LT	O
^MC	O
^MD	O
^MN	O
^PM	O
^PO	O
^PQ	O
^PR	O
~PR	O
^PW	O
^SC	O
^SD	O
^SF	O
^SL	O
^SN	O
^SO	O
^ST	O

Command	Compatibility
~TA	○
^XA	○
^XF	○
^XG	○
^XZ	○
^ZZ	○

FCC Information

This device complies with part 15 of the FCC Results. Operation is subject to the following two conditions:

(1) This Device may not cause harmful interface, and
(2) This device must accept any interference received, including interference that may cause undesired operation.

This Class [B] digital apparatus complies with Canadian ICES-003.
Cet appareil numerique de la classe [B] est conforme a la norme NMB-003 du Canada.

Operation is subject to the following two conditions: (1) this device may not cause harmful interference, and (2) this device must accept any interference received, including interference that may cause undesired operation of the device.

☑ NOTE

This equipment has been tested and found to comply with the limits for CLASS B digital device, pursuant to Part 15 of FCC Rules. These limits are designed to provide reasonable protection against harmful interference when the equipment is operated in a commercial environment. This equipment generates, uses and can radiate radio frequency energy and, if not installed and used in accordance with the instuctions, may cause harmful interference to radio communications. However, there is no guarantee that interference will not occur in a particular installation. If this equipment does cause harmful interference to radio or television reception, which can be determined by turning the equipment off and on, the user is encouraged to try correct the interference by one or more of the following measures:

1.1. Reorient or relocate the receiving antenna.
1.2. Increase the separation between the equipment and receiver.
1.3. Connect the equipment into an outlet on a circuit different from that to which receiver is connected.
1.4. Consult the dealer or experienced radio/TV technician for help.

⚠ WARNING

Changes or modifications not expressly approved by the manufacturer could void the user's authority to operate the equipment.

IMPORTANT NOTE

SAR results information :
9485NP has been tested and complies with the FCC RF exposure guidelines.
The highest reported body SAR values for 9485NP are: 0.084 W/kg