Senior Care Locator System

Installation Guide

Apr. 25, 2024

Table of Contents

1. SYSTEM INTRODUCTION 1

2. BUN-3 BASE UNIT 5

2.1. PARTS IDENTIFICATION 5

2.2 POWER SUPPPLY 6

2.3 DIP SWITCH SETTING 6

2.4. LEARNING LOCATORS / REPEATERS 7

2.5. CLEAR MODE 9

2.6. HARDWARE INSTALLATION 9

2.7. SOFTWARE INSTALLATION 12

2.7.1 Installing the Finder Software 12

2.7.2 Connecting to Local Programming Webpage 13

2.7.2.1 Network Setting 14

2.7.2.1.1 GSM 14

2.7.2.1.2 Network 15

2.7.2.1.3 Wireless 16

2.7.2.2 System Setting 17

2.7.2.2.1 Change Password 17

2.7.2.2.2 Date and Time 17

2.7.2.2.3 MG Report 18

2.7.2.2.4 Firmware Update 18

2.7.2.2.5 Factory Reset 19

2.7.2.2.6 System Log 20

3. LTN-3 LOCATOR 21

3.1. PARTS IDENTIFICATION 21

3.2. POWER SUPPPLY 22

3.3. FEATURES 22

3.4. DIP SWITCH SETTING 23

3.5. LEARNING LOCATOR INTO BASE UNIT / REPEATER 25

3.6. MOUNTING THE LOCATOR 25

4. RPN-3 REPEATER 27

4.1. PARTS IDENTIFICATION 27

4.2. POWER SUPPPLY 28

4.3. FEATURES 28

4.4 DIP SWITCH SETTING 29

4.5 LEARNING 30

4.6. CLEAR MODE 31
4.7. FACTORY RESET 31
4.8. MOUNTING THE REPEATER 31
5. GPT-1-FS GEO PENDANT & FALL SENSOR 33
5.1. PARTS IDENTIFICATION 33
5.2. POWER SUPPLY 33
5.3. FEATURES 34
6. OTHER ACCESSORY DEVICE 36
7. SPECIFICATION 37

1. System Introduction

The Senior Care Locator System comprises the Base Unit (BUN-3), Locator (LTN-3), Repeater (RPN-3), and associated peripherals, specifically designed for nursing homes or hospitals of various sizes.

The Locator (LTN-3) operates as a peripheral receiver, capturing signals from accessories and forwarding them to the Base Unit (BUN-3). The BUN-3 then reports to the MGIoT server via IP, Wifi, or LTE.

The Repeater (RPN-3) is an optional device capable of relaying signals if the Base Unit is beyond the Locator’s signal range.

Multiple Locators (LTN-3) can be strategically placed in different areas for location tracking. When the senior user presses the RF pendant for help, the system quickly identifies the activation location based on the receiving Locator's position.

Besides, the Locator (LTN-3) can also work with the Geo Pendant (GPT-1) to detect seniors entering/exiting a preset area.

Each Locator's RF range can be adjusted to a shorter distance to enhance location accuracy, though more locators are needed for full coverage. Overlapping detection ranges between locators may occur, with the system using the best RSSI signal strength for accurate activation location.

The key functionalities of each component are outlined as follows:

- **Base Unit (BUN-3)**
  - Receives signals from Locators or Repeaters in 906-915 MHz and reports the received signals, including device ID, device RSSI value, Locator ID, and Repeater ID, to the MG IoT server via IP, WiFi, or LTE.
  - Can learn up to 100 Locators and Repeaters.
- **Locator (LTN-3)**
  - Receives 919MHz signals sent from peripherals, such as Geo Pendant / Fall Sensor (GPT-1-FS), Panic Button (PB-23), Pull Cord (PCU-5), Emergency Strobe Light (ESL-1), Sensor Pad Transmitter (SPT-1), and transmits the signals in 906-915 MHz to Repeater or Base Unit.
  - Can store up to 200 signals sent from Geo-Pendants (GPT-1-FS) and 300 signals from other devices at the same time, and transmit the signals to Base Unit / Repeater one by one following First-in-First-out algorithm.
  - 4 adjustment levels of RF receiving range for peripheral signals.
- **Repeater (RPN-3)**
  - Optional device used to relay signals sent from Locator/Repeater with same Group setting in 906-915 MHz.

- Can learn up to 100 Locators and Repeaters.

- **Geo Pendant (GPT-1 / GPT-1-FS)**
  - Sends keep-alive signals regularly to the Locator to detect if a senior has exited the protected area.

- **Fall Sensor (FS / GPT-1-FS)**
  - Allows user to summon help in an emergency by manual button press or auto fall detection.

- **Fixed Panic Button (PB-23) / Fixed Pull Cord (PCU-5) / Wrist or Pendant Transmitter (WTR)**
  - Used to trigger an emergency signal when a senior needs help.

- **Emergency Strobe Light (ESL-1)**
  - Provides visual alert by flashing white LEDs when the paired RF device (Fall Sensor / Panic Button / Pull Cord / Wrist Transmitter / Geo Pendant) is triggered.
  - One ESL-1 can pair with up to 10 RF devices.

- **Sensor Pad Transmitter (SPT-1)**
  - Monitors activation of specific wired devices (e.g. chair pad, bed pad, or floor mat) that is connected to it, and transmit signals to Locator upon movement detection.

SYSTEM CAPABILITY:

- The Locator (LTN-3) receives peripheral signals in 919MHz, and forwards the signals in 906-915 MHz to the Base Unit (BUN-3)
- The Base Unit (BUN-3) then reports the receiving data, including device ID, locator ID, and device RSSI value to the MGIoT server via IP, WiFi, or LTE.
- If the Base Unit (BUN-3) is beyond the Locator's (LTN-3) signal range, additional Repeater (RPN-3) deployment is required to relay signals.

➢ The frequency hopping technology is adopted in the communication between Locator (LTN-3), Repeater (RPN-3) and Base Unit (BUN-3).

There are three groups of hopping frequency bands, with each group offering up to 24 Channels

GROUP 1: 906.32 ~ 914.60 MHz, 24 channels

GROUP 2: 906.44 ~ 914.72 MHz, 24 channels

GROUP 3: 906.56 ~ 914.84 MHz, 24 channels

- The Locator (LTN-3) and Repeater (RPN-3) will transmit a supervision signal to the Base Station (BUN-3) every hour for the Base Station to monitor their conditions.

- When using a Geo Pendant (GPT-1-FS) that sends a keep-alive signal to the

Locator at least 3 times per minute, if the Locator (LTN-3) doesn't receive this signal for 150 seconds, it sends an Exit signal to the Base Unit (BUN-3), indicating the user has left the signal range. Receiving the keep-alive signal again indicates the Geo Pendant has re-entered the Locator's signal range.

- Locator's (LTN-3) RF receiving range for peripherals can be adjusted in 4 levels. A shorter range provides accurate device location but may require more locators for comprehensive coverage. A wider range reduces the number of locators needed, but compromises location accuracy.

SYSTEM OPERATION DIAGRAM

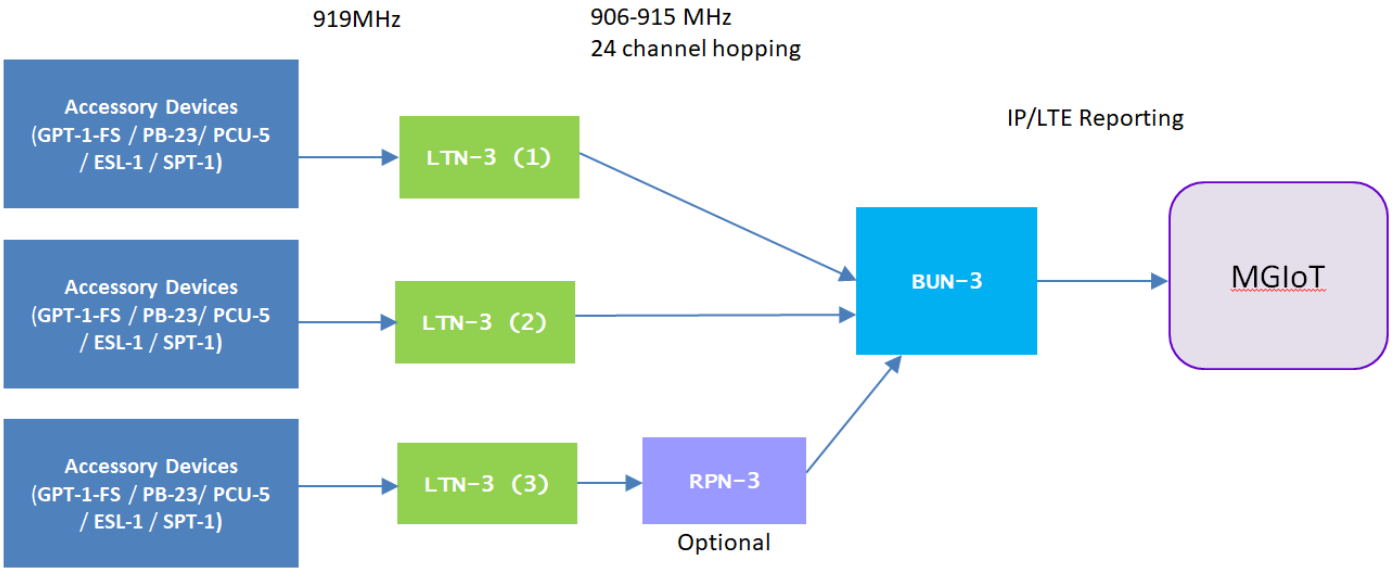

Installation and Setup Guidelines

- Learning is **NOT needed** between the peripherals and Locators (LTN-3). The locator will capture all 919MHz signals sent from peripherals within its receiving range.
- All Locators (LTN-3) and Repeaters in the system must be learnt into the Base Unit for the Base Unit to recognize and forward their signals.
- The Locator must be learnt into the Repeater which receives and relays its signal. If multiple Repeaters are used to relay signal, the Repeater must be learnt into its next Repeater in line of signal transmission to relay the signal.
- Make sure the distance between Locator (LTN-3), Repeater (RPN-3) and Base Unit (BUN-3) is greater than 5 meters to prevent signal interference.
- After learning, make sure to conduct walk test to check for the signal range of the learned-in locator (LTN-3) or learned-in repeater (RPN-3) with the Base Unit (BUN-3).

Also conduct walk test to check for the signal range of the learned-in Locator (LTN-3) or learned-in Repeater (RPN-3) with the Repeater (RPN-3) that relays its signals.

For example, in the following diagram:

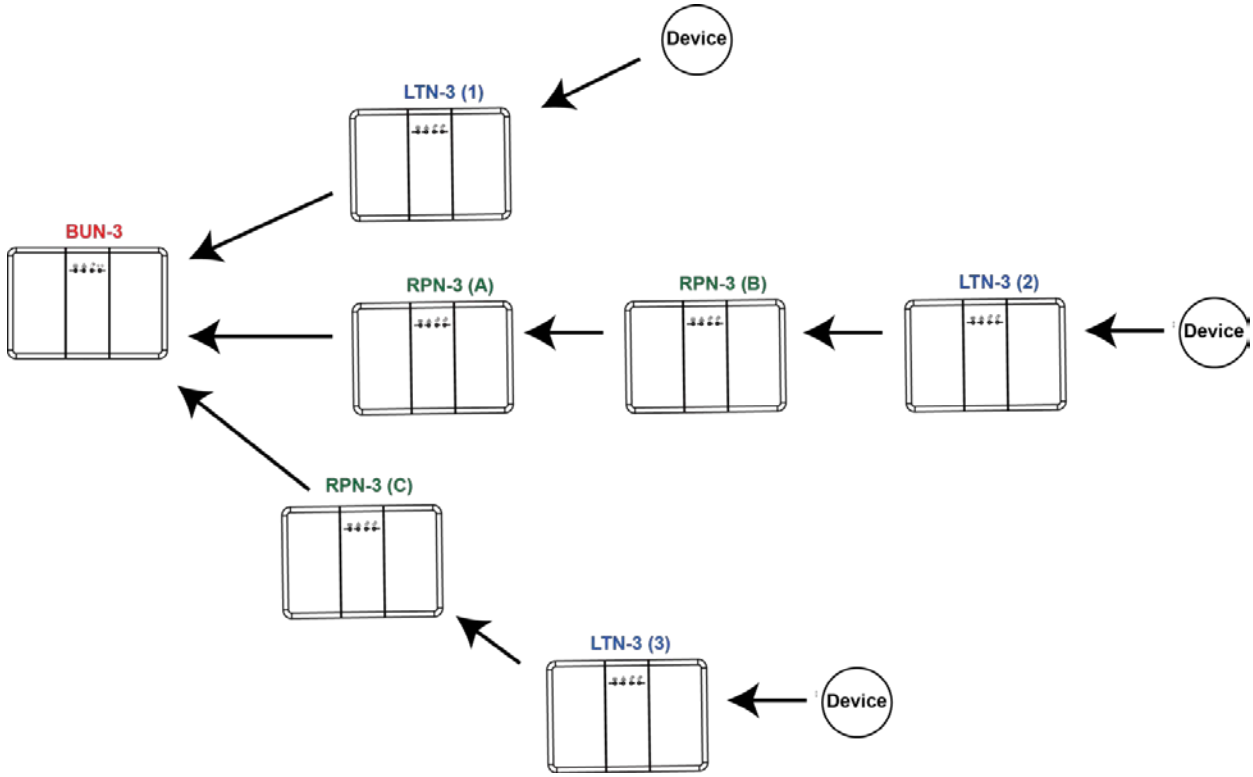

- Locator **LTN-3 (1)** should be learnt into the Base Unit **BUN-3** only.

  Locator **LTN-3 (2)** should be learnt into Repeater **RPN-3 (B)** and Base Unit **BUN-3**.

  Locator **LTN-3 (3)** should be learnt into Repeater **RPN-3 (C)** and Base Unit **BUN-3**.
- Repeater **RPN-3 (A)** should be learnt into the Base Unit **BUN-3**.

  Repeater **RPN-3 (B)** should be learnt into Repeater **RPN-3 (A)** and the Base Unit **BUN-3**.

  Repeater **RPN-3 (C)** should be learnt into the Base Unit **BUN-3** only.

- **Walk Test**:

  - For Tansmission path LTN-3 (1) to BUN-3:

    Walk test needs to be conducted between LTN-3 (1) and BUN-3.

  - For Tansmission path LTN-3 (2) to RPN-3 (B) to RPN-3 (A) to BUN-3:

    Walk test needs to be conducted between LTN-3 (2) and RPN-3 (B), between RPN-3 (B) and RPN-3 (A), and between RPN-3 (A) and BUN-3.

  - For Tansmission path LTN-3 (3) to RPN-3 (C) to BUN-3:

    Walk test needs to be conducted between LTN-3 (3) and RPN-3 (C), and between RPN-3 (C) and BUN-3.

2. BUN-3 Base Unit

2.1. Parts Identification

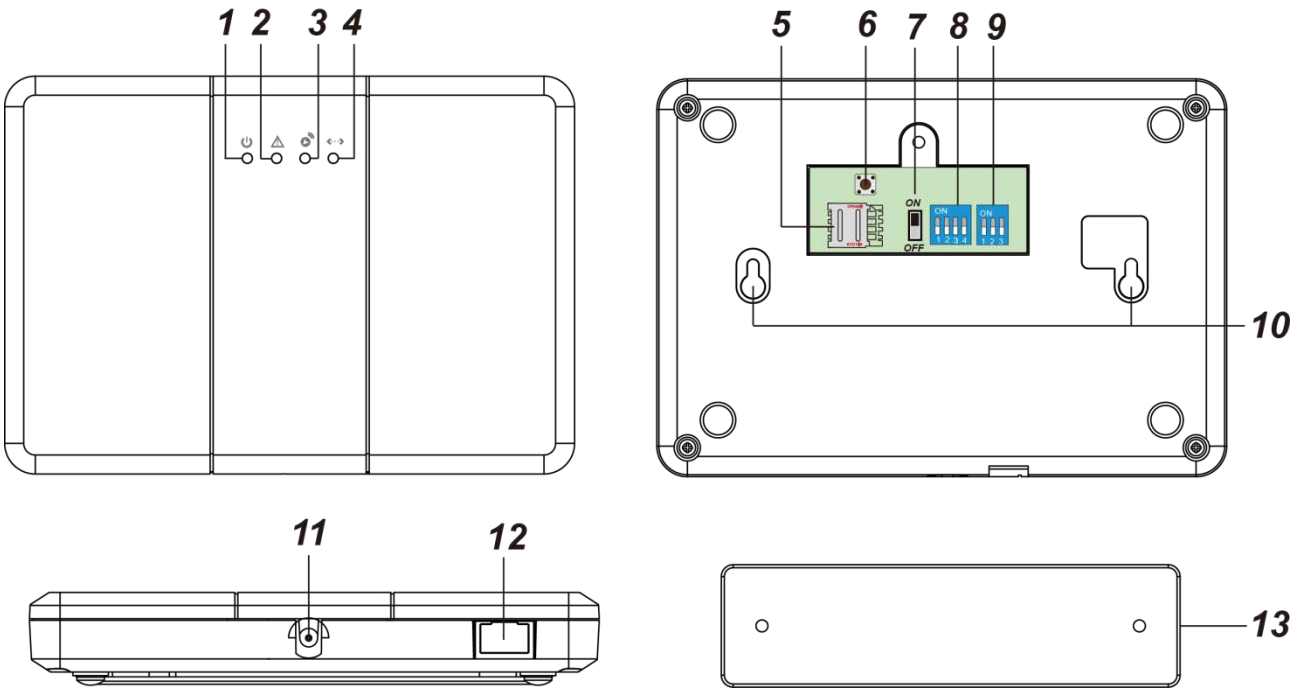

1. **Power LED (Green)**

   On – AC Power supplied

   Flashes every second –AC Power disconnected

2. **Fault LED (Red)**

   Flashes every 3 seconds when on AC power: Cellular Network Fault

   Flashes every 3 seconds when on Battery Power: Low Battery

3. **RX: Receive LED (Red)**

   Flashes once – When receiving a signal transmission

   Slow Flash – Base Unit under Learning Mode

4. **Reporting LED (Red)**

   Flashes quickly – Reporting after RF signal reception.

5. **Micro SIM Card Tray**
6. **Clear Button**

   Press and hold the Clear Button for 5 seconds in learning mode to clear all learned in locators/repeaters.

7. **Battery Switch**
8. **Dip Switch Set 1 (Setting)**
9. **Dip Switch Set 2 (Group)**
10. **Mounting Holes**
11. **DC jack**
12. **Ethernet Port**
13. **Mounting Bracket**

2.2 Power Suppply

AC Power Adaptor

- A DC 12V 1A switching power adaptor is required to connect to a wall outlet to power the Base Unit. Be sure only to use an adapter with the appropriate AC voltage rating to prevent component damage.
- When the AC power is disconnected, the Base Unit will report to MGIoT.

Rechargeable Battery

- In addition to the adapter, there is a 7.2V 2300mAh Ni-MH rechargeable battery pack inside the Base Unit, which serves as a backup in case of a power failure.
- During normal operation, the AC power adapter is used to supply power to the Base Unit and at the same time recharge the battery. Slide the Battery Switch to ON to activate and charge the battery. It takes approximately 32 hours to fully charge the battery.
- When low battery status is detected, the Base Unit will report to MGIoT.

2.3 Dip Switch Setting

The Base Unit contains 2 Dip Switch blocks for adjusting frequency hopping.

- After changing Dip Switch setting, disconnect and reconnect power supply to apply new settings. ***<NOTE>*** *TO COMPLETELY POWER OFF THE BASE UNIT, BESIDES DISCONNECTING AC POWER, PLEASE SLIDE THE BATTERY SWITCH TO OFF.*
- For Dip SW1-1, please change setting when the Base Unit is powered to enter or leave learning mode, because DIP Switch 1-1 is only valid when the Base Unit is powered.

1. Dip Switch Set 1 (Setting)

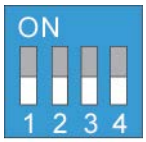

The Dip Switch Set 1 is used to set number of channels, or to learn in Locators and Repeaters.

SW1-1	SW1-2	SW1-3	SW1-4	Channel Number
-	Off	Off	Off	24 Channels
-	Off	Off	On	18 Channels
-	Off	On	Off	12 Channels
-	Off	On	On	6 Channels
On	-	-	-	Learning Mode

<NOTE>

☞ **Channel number setting must be identical for the Base Station and all Locators and Repeaters.**

2. Dip Switch Set 2 (Group)

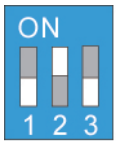

The Dip Switch Set 2 contains 3 dip switches for setting Group Frequency. There are 3 Groups available for setting.

SW2-1	SW2-2	SW2-3	Group
On	Off	Off	Group1
Off	On	Off	Group2
Off	Off	On	Group3

GROUP 1 frequency: 906.32 ~ 914.60 MHz, with spacing of 360KHz between each channel.

GROUP 2 frequency: *906.44 ~ 914.72 MHz, with spacing of 360KHz between each channel.*

GROUP 3 frequency: *906.56 ~ 914.84 MHz, with spacing of 360KHz between each channel.*

<NOTE>

☞ **Group Number must be identical for the Base Unit and all Locators and Repeaters.**

2.4. Learning Locators / Repeaters

All Locators and Repeaters in the system must be learnt into the Base Unit for the Base Unit to recognize and forward their signals. Follow instructions below to learn in and remove locators / repeaters.

Learning Locator / Repeater:

1. Slide Dip Switch SW1-1 to **ON** when the Base Unit is powered. The Base Unit will emit a long beep and the Red LED (RX: Receive LED) will begin to flash slowly to indicate it is now under learn mode.
2. Press and hold the Test Button of the Locator or Repeater for 3 seconds to transmit a learn code.
   - When the Base Unit receives the learn code, it will emit **a long beep** to indicate learning is successful.
   - When the Base Unit receives learn code from an already learnt in Locator / Repeater, it will emit **2 beeps** to indicate.
   - When the Base Unit receives learn code and its device numbers are full (100 devices), it will emit **4 beeps** to indicate it cannot learn in any more device.
3. After learning is completed, slide Dip Switch SW1-1 to **OFF**. The Base Unit will emit a long beep, and the Red LED will stop flashing to indicate it now returns to normal mode.

Walk Test

1. After the Locaor or Repeater is learned into the Base Unit, place the Locaor or Repeater in the desired installation location and press the test button to transmit a test signal to the Base Unit.
2. If the Base Unit receives the test signal, it will send an acknowledgement to the Locator or Repeater. The Locater's or Repeater's TX Transmit LED will flash Green when receiving acknowledgement from the Base Unit.

Learning Guideline

If the Base Unit is beyond the Locator's signal range and additional Repeater(s) deployment is required to relay the signal, the Locator must be learnt into the Repeater which receives and relays its signal.

If multiple Repeaters are used to relay signal, the Repeater must be learnt into its next Repeater in line of signal transmission to relay the signal.

For example, in the following diagram:

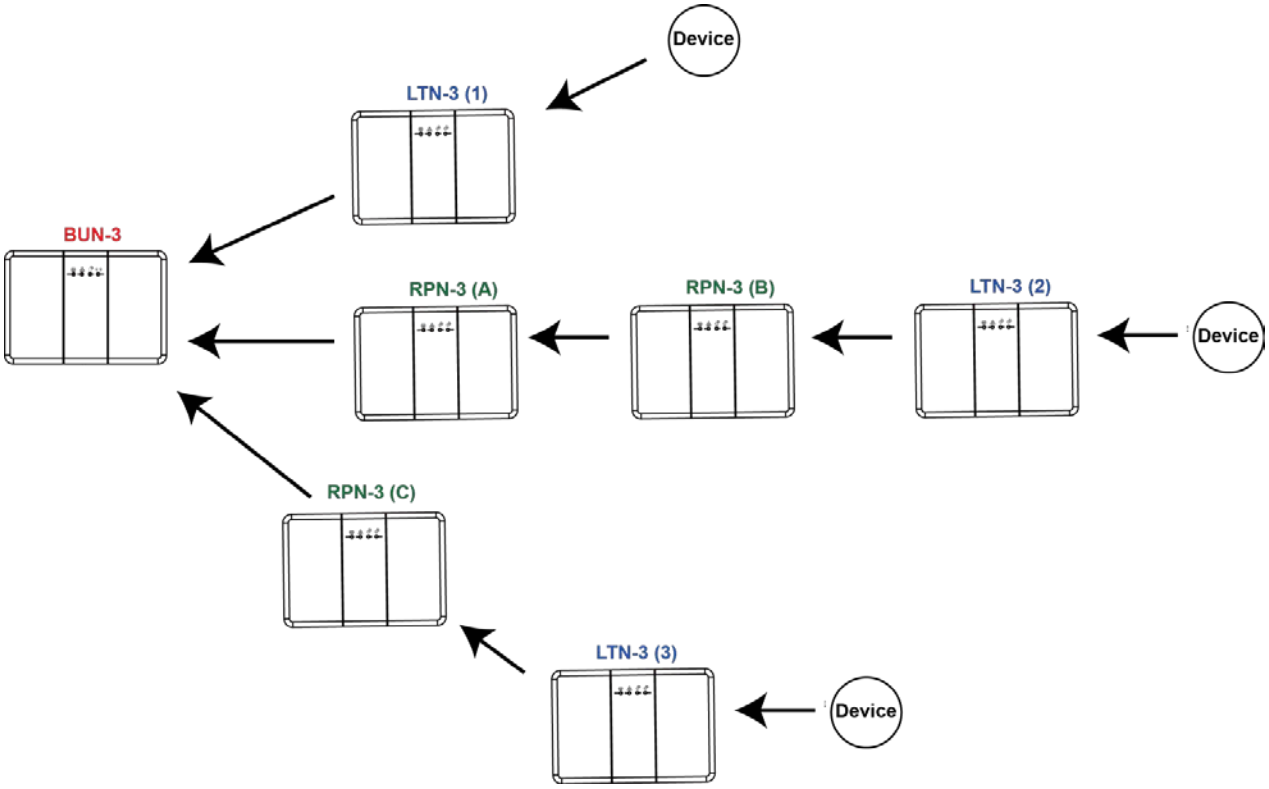

- Locator **LTN-3 (1)** should be learnt into the Base Unit **BUN-3** only.

  Locator **LTN-3 (2)** should be learnt into Repeater **RPN-3 (B)** and Base Unit **BUN-3**.

  Locator **LTN-3 (3)** should be learnt into Repeater **RPN-3 (C)** and Base Unit **BUN-3**.
- Repeater **RPN-3 (A)** should be learnt into the Base Unit **BUN-3**.

  Repeater **RPN-3 (B)** should be learnt into Repeater **RPN-3 (A)** and the Base Unit **BUN-3**.

  Repeater **RPN-3 (C)** should be learnt into the Base Unit **BUN-3** only.

- Walk Test:
  - For Tansmission path LTN-3 (1) to BUN-3:

    Walk test needs to be conducted between LTN-3 (1) and BUN-3.
  - For Tansmission path LTN-3 (2) to RPN-3 (B) to RPN-3 (A) to BUN-3:

    Walk test needs to be conducted between LTN-3 (2) and RPN-3 (B), between RPN-3 (B) and RPN-3 (A), and between RPN-3 (A) and BUN-3.
  - For Tansmission path LTN-3 (3) to RPN-3 (C) to BUN-3:

    Walk test needs to be conducted between LTN-3 (3) and RPN-3 (C), and between RPN-3 (C) and BUN-3.

2.5. Clear Mode

- Clear Mode is used to remove all learned-in locator(s) and/or repeater(s) from the Base Unit.

1. Slide Dip Switch SW1-1 to **ON** when the Base Unit is powered. The Base Unit will emit a long beep and Red LED will begin to flash slowly to indicate it is now under learn mode.
2. Press and hold the Clear Button of the Base Unit for 5 seconds until the Base Unit emits a long beep to indicate all learnt-in devices have been cleared.
3. Slide Dip Switch SW1-1 to **OFF**. The Base Unit will emit a long beep, the Red LED will stop flashing to indicate it now returns to normal mode.

2.6. Hardware Installation

Step 1 Choose a suitable location for the Base Unit.

The Base Unit requires the mains power and Ethernet connections. It should not be placed in a damp location such as a bathroom or close to a heat source like a microwave oven, which could reduce signal strength.

If a Cellular Module is used, ensure that there is good cellular coverage (Advisable to have a level of at least 4 out of 5).

Step 2 Plug an Ethernet cable into the Base Unit's Ethernet port and connect to an Ethernet network.

Step 3 (Optional) Insert a micro SIM card with data plan for the Base Unit to operate via cellular network.

<NOTE> Insert the SIM Card when the Base Unit is powered off.

- Slide-open the lid of the SIM card tray.

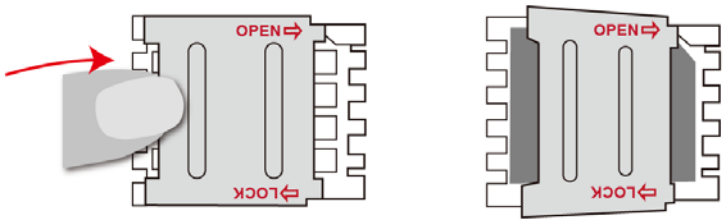

- Place the micro SIM card in the SIM card tray with the **chip side facing down**.

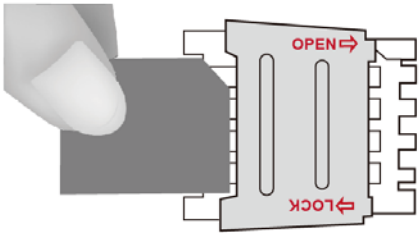

- Close the lid and slide to lock it.

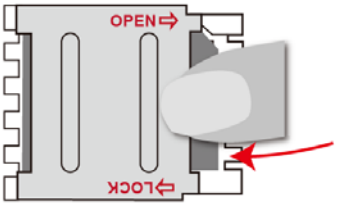

Step 4 Plug the AC power adaptor into the Base Unit's DC jack and connect to the mains power. The Base Unit will beep twice; the Power LED (Green) will turn on to indicate the Base Unit is on AC power.

Mounting the Base Unit

The Base Unit can be placed on the table or mounted on the wall.

Follow the steps below to mount the Base Unit:

Step 1 Using the holes of the Mounting Bracket as a template, drill holes into the mounting surface.

Step 2 Insert the wall plugs if fixing into plaster or brick. Screw the Mounting Bracket to the wall.

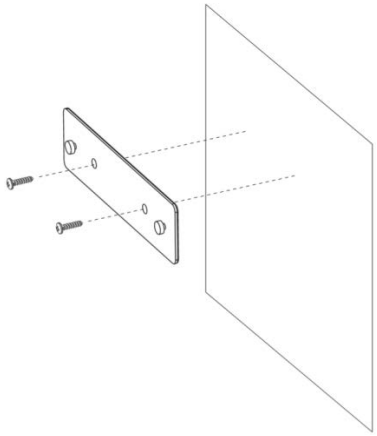

Step 3 Hook the Base Unit onto the Wall Mounting Bracket.

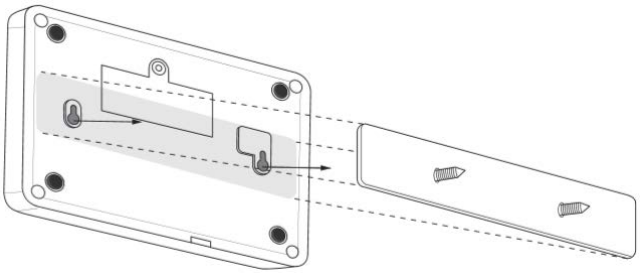

Step 4 Hold the Base Unit and gently push it downwards as shown below.

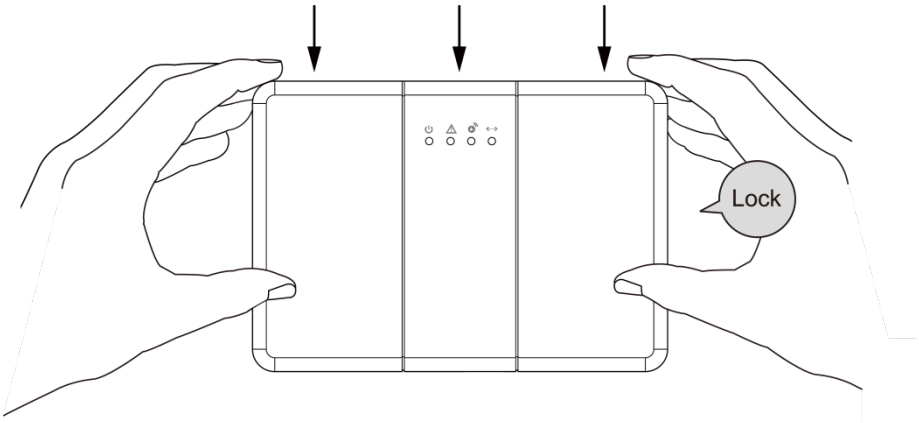

2.7. Software Installation

2.7.1 Installing the Finder Software

The Base Unit could be accessed via Local Area Network for programming. The “Finder” software is provided for user to locate the panel on the LAN for access.

Before you begin web programming, please make sure that you have plugged an IP cable into the Base Unit’s Ethernet port and connected the cable to an Ethernet network. The Control Panel and your PC or Laptop must be on the same LAN.

Step 1. To download Finder software, open your browser and type below URL in the address bar: http://www.climax.com.tw/climax-download-finder.html.

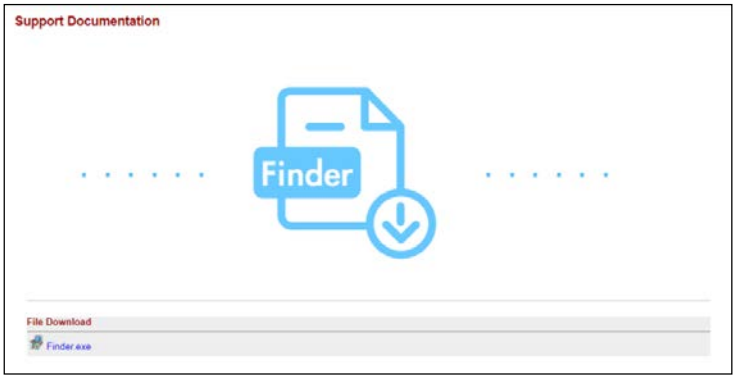

Step 2. After download, install the software and follow on-screen instructions to complete installation.

Step 3. Once complete, the Finder icon will be displayed on your desktop.

Step 4. Double click on the “**Finder.exe**” to start the software. Finder will automatically search for Base Unit on the LAN and display its information. If available, the Base Unit’s LAN IP address, Firmware version and MAC address will be displayed

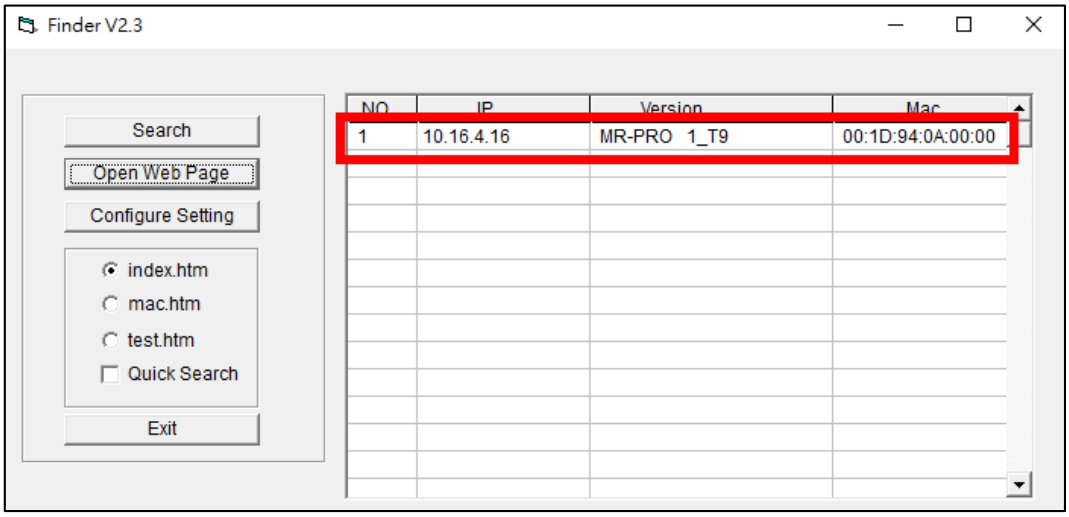

Step 5. If the Base Unit’s information is not displayed, check the power and Ethernet

connection, then click “Search” for the software to update search result.

If you need to program the Base Unit’s network setting manually, click “**Configure Setting**”. Enter your network setting, the Base Unit’s username (default: **admin**) and password (default: **admin1234**) and click on “OK” to confirm the settings. If the username and password are correct, a pop-up window will display “Status: Configure success!!”

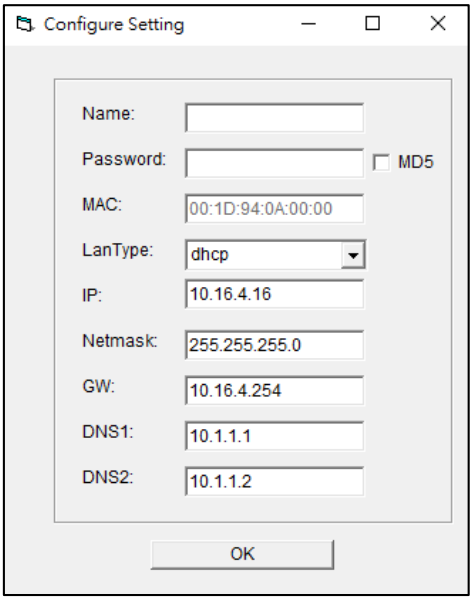

2.7.2 Connecting to Local Programming Webpage

Step 1. Select the Base Unit in the Finder software and click on “Open Webpage” or simply double click on the Base Unit to connect to panel webpage.

Step 2. You will enter panel Welcome page. The Welcome page displays current Base Unit firmware version information according to different model and MAC address.

Step 3. Click on the pages and folders on the left to access the Base Unit's various functions. You will be prompted to enter the User name & Password before you can access the other pages.

Default user name: **admin**

Default password: **admin1234**

For first time setup, webpage connection is only available within 1 hour after the Base Unit panel is powered on; if the Base Unit has been powered on for more than 1 hour. Webpage access will be disabled. Reboot the base unit to enable webpage function again.

2.7.2.1 Network Setting

2.7.2.1.1 GSM

This webpage is for you to program the GSM network connection.

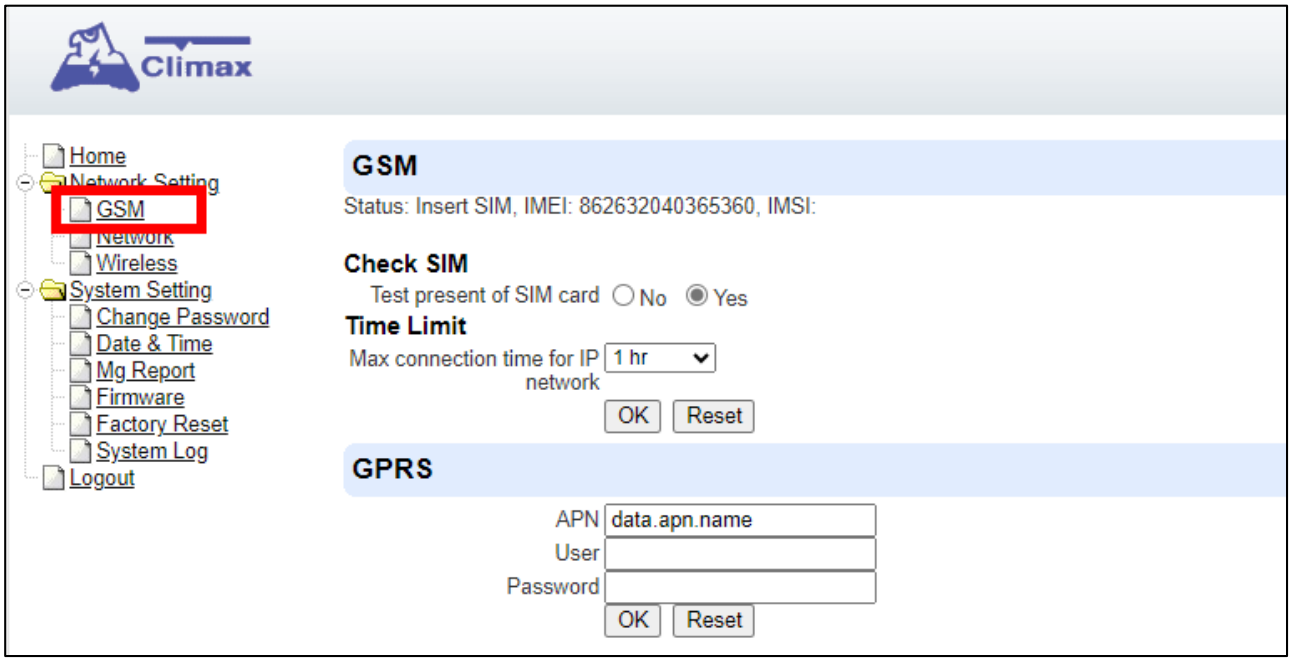

GSM

- **Check SIM**

  This is designed for the system to check the SIM card or not. (If users do not intend to use the GSM function, please tick "NO" to ensure the system will not check if the SIM card is inserted or not and it will not display the GSM fault by LED flashing.

- **Time Limit**

  The system will shut down the GSM network according to the Time Limit setting (Default is 1 hour) and switch to the network connection to Ethernet. If the Ethernet network is poor or disconnected, the system will automatically reconnect to GSM network.

<NOTE>

☞ User who only uses GSM network can set the GSM connection time to No Limit.

GPRS

In order to allow GPRS to serve as a back-up IP Reporting method, this section will need to be programmed before reporting.

- **APN (Access Point) Name**

  It is the name of an access point for GPRS. Please inquire your service provider for an APN. When APN is set, the system becomes valid for internet connection.

- **User (GPRS)**

  It is the Log-in name to input before accessing the GPRS feature. Please inquire your service provider.

- **Password (GPRS)**

  It is the User Password to input before accessing the GPRS feature. Please inquire your service provider.

2.7.2.1.2 Network

This webpage is for you to program the Network for IP connection.

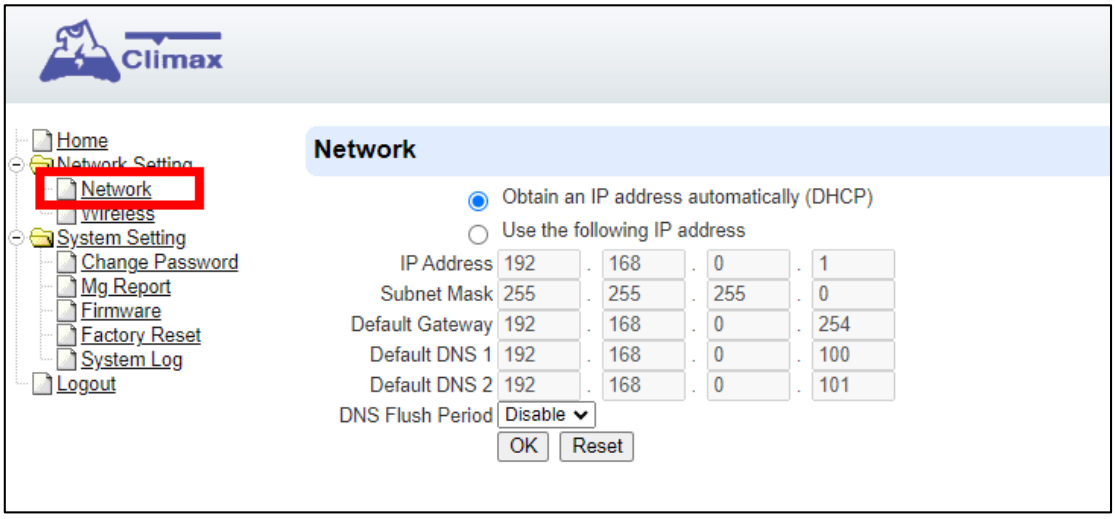

- **Obtain an IP address automatically (DHCP)**

  If DHCP is selected, the Network will obtain an IP address automatically with a valid Network DHCP Server. Therefore, manual settings are not required.

  This is only to be chosen if your Network environment supports DHCP. It will automatically generate all information.

- **Use the following IP address**

  You can also enter the Network information manually for IP Address, Subnet Mask, Default Gateway, Default DNS 1 and Default DNS 2.

Please make sure that you have obtained all required values according to your Network environment. Please contact your network administrator and/or internet service provider for more information.

- **DNS Flush Period**

  You can set the system to clear current DNS resolution records for all entered URL settings (Reporting, Upload, XMPP…etc.) after a set time period. The system will then resolve the Domain Name again and acquire new IP address for the URL settings. This function is disabled by default.

2.7.2.1.3 Wireless

Use "**Wireless**" webpage to set up the Base Unit's Wi-Fi setting.

There are 2 ways you can connect to the wireless network.

1. Search for Wi-Fi AP: Click "**Scan WiFi AP**" to search for available wireless network. Select the available Wireless APs from the list by clicking "**Set**" after AP info column and enter the required information (pre-shared key, etc.) and click the "**OK**" button.

2. Or Enter the Wireless information manually and click "**OK**" to connect.

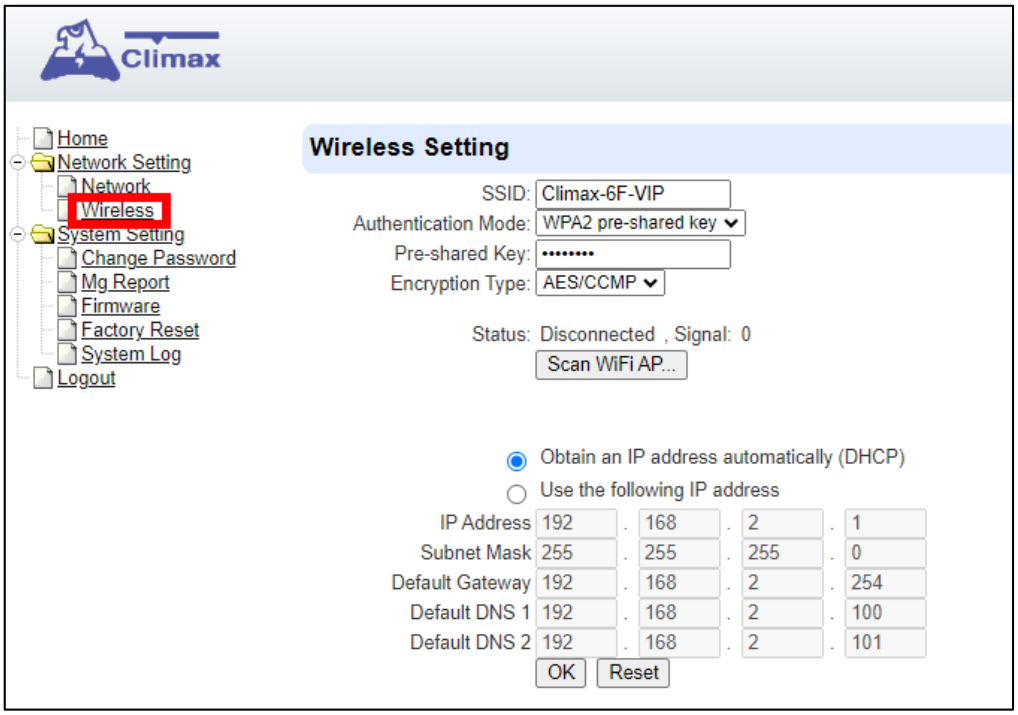

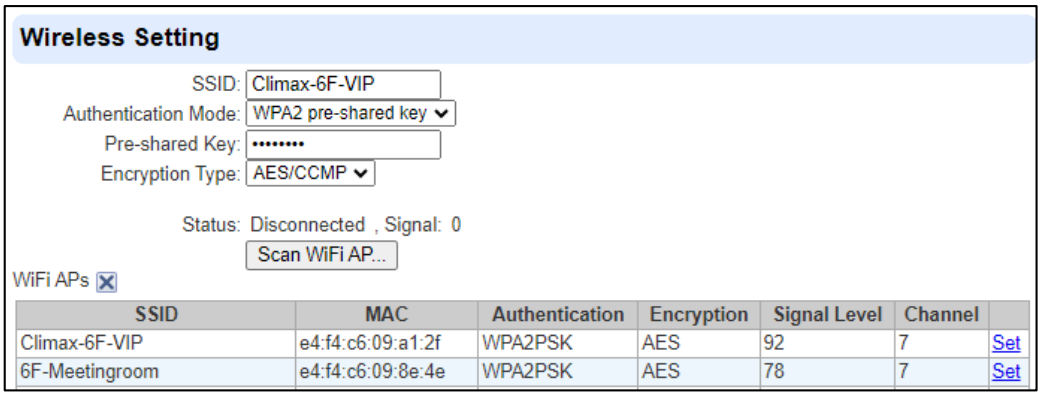

2.7.2.2 System Setting

Select **System Setting** from panel webpage to access configuration webpages.

2.7.2.2.1 Change Password

This page is used to change the local webpage login user name and password. Please note both User Name and Password are ***case sensitive***.

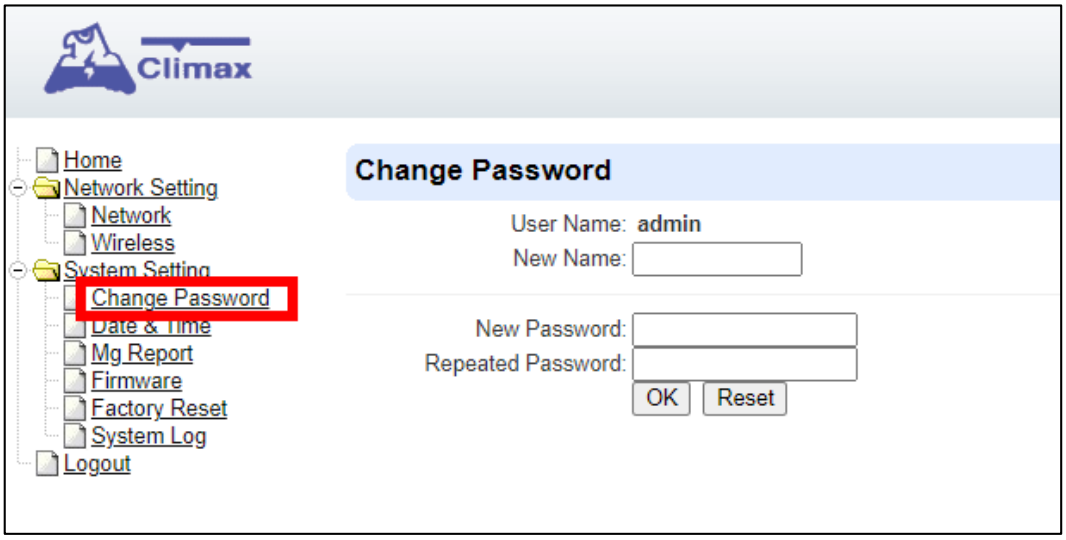

Step 1. Enter the preferred **User Name** in the “New Name” field.

Step 2. Enter the preferred **Password** in the “New Password” field and repeat the same Password in the “Repeated Password” field.

2.7.2.2.2 Date and Time

This page is used for time setting.

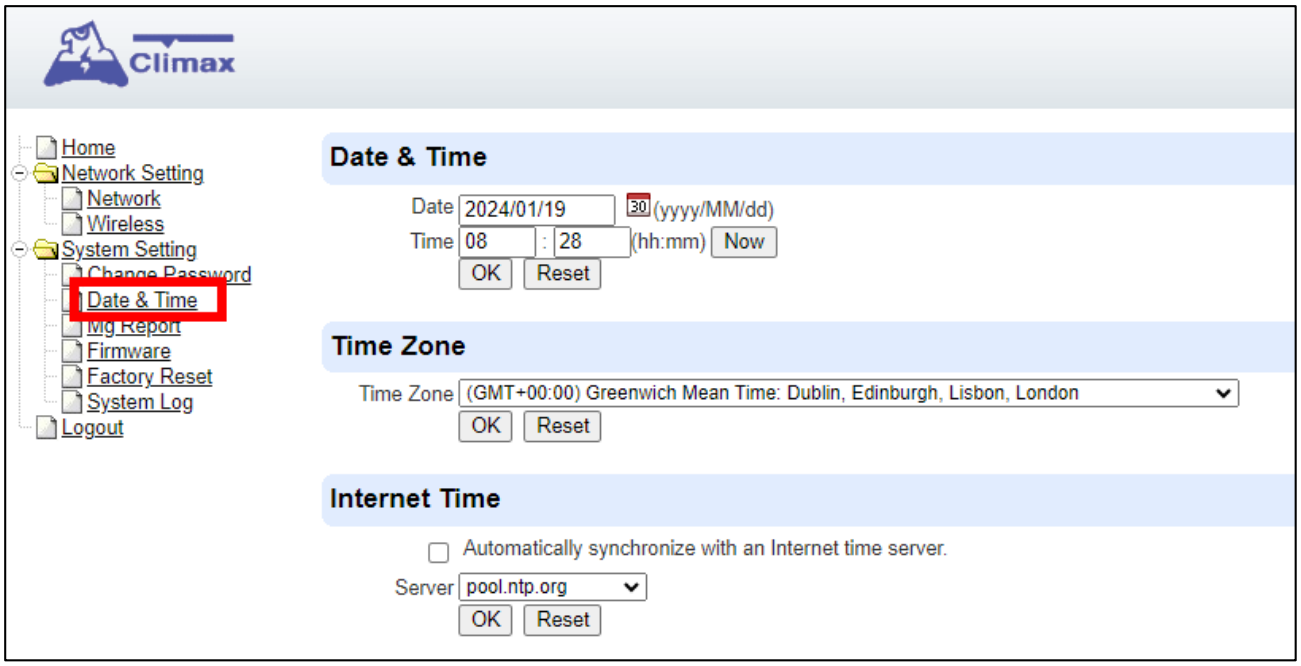

- **Date & Time:** Set current month, date and time.
- **Time Zone:** Choose your time zone, and then the system will calculate the daylight saving time automatically (if necessary).
- **Internet Time:** The system will automatically synchronize with an internet time server. Tick the check box to enable this function. Available options: pool.ntp.gov, time.nist.gov and tick.usno.navy.mil.

2.7.2.2.3 MG Report

This page is used for installer to program report destination..

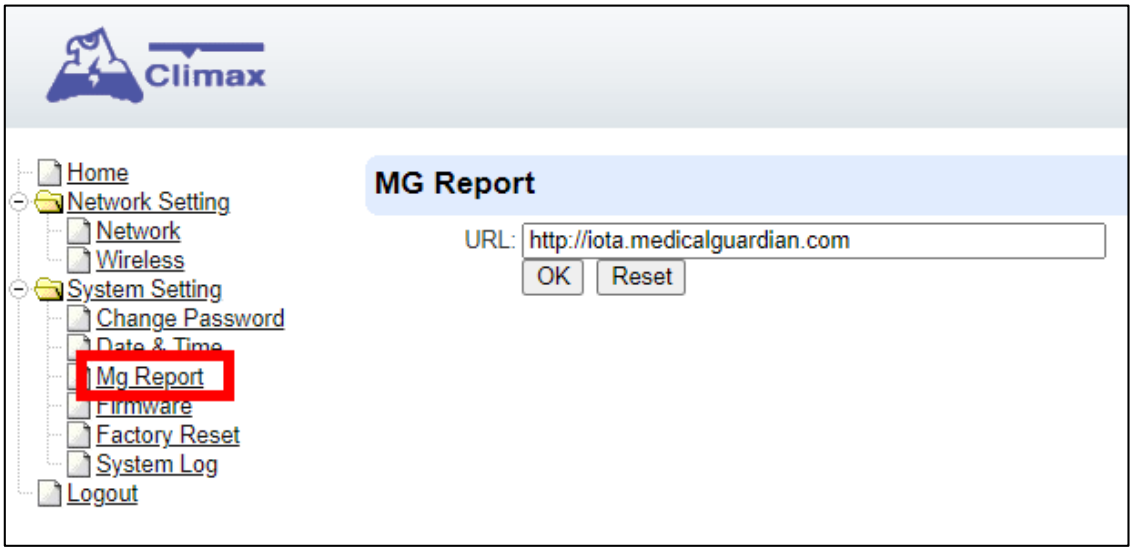

2.7.2.2.4 Firmware Update

This page is used to update Base Unit firmware.

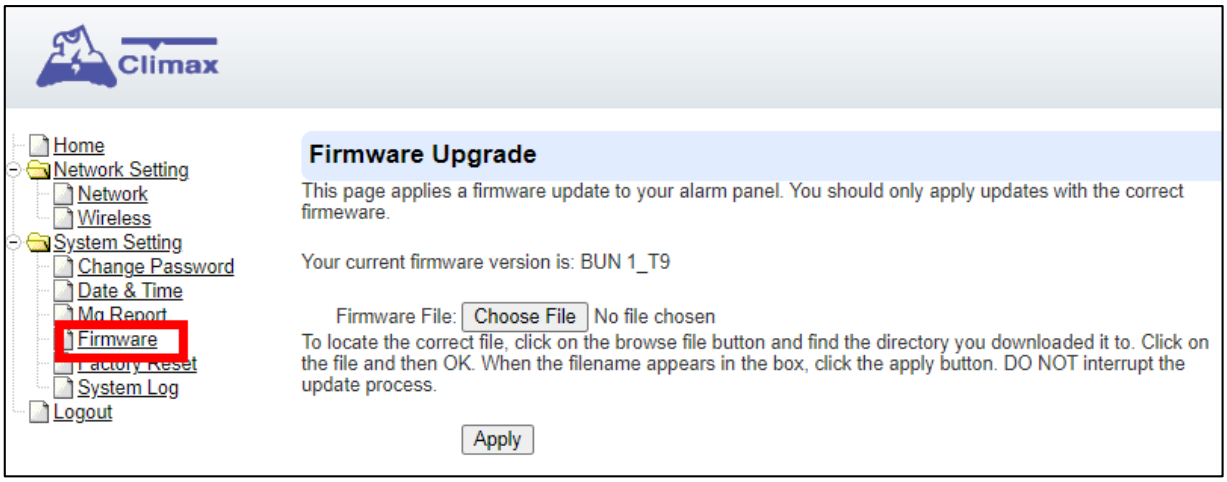

Step 1. Click "**Choose File**" and locate the latest firmware file ("**unzipped .bin**" file) in your PC.

Step 2. Click "**Apply**" to upload the latest firmware to Base Unit.

Step 3. DO NOT power off during firmware update.

Step 4. Once Firmware update is complete, the Base Unit will reboot automatically.

2.7.2.2.5 Factory Reset

Yan can clear all programmed parameters in the Base Unit and reset it to Factory Default.

<NOTE>

☞ Factory Resetting the Base Unit will **NOT** remove learned in locators/repeatears. You will need to press the Test button for 5 secodns in learning mode to remove devices.

Step 1. Tick the **Kept current network setting** box if you want to keep the current Network settings. Otherwise, the system will reset its value back to factory default.

Step 2. Click "Yes".

Step 3. DO NOT power off during factory reset process.

Step 4. Once factory reset is complete, the Base Unit will reboot automatically.

2.7.2.2.6 System Log

The system log webpage logs the base unit's detail system operation history and reporting history.

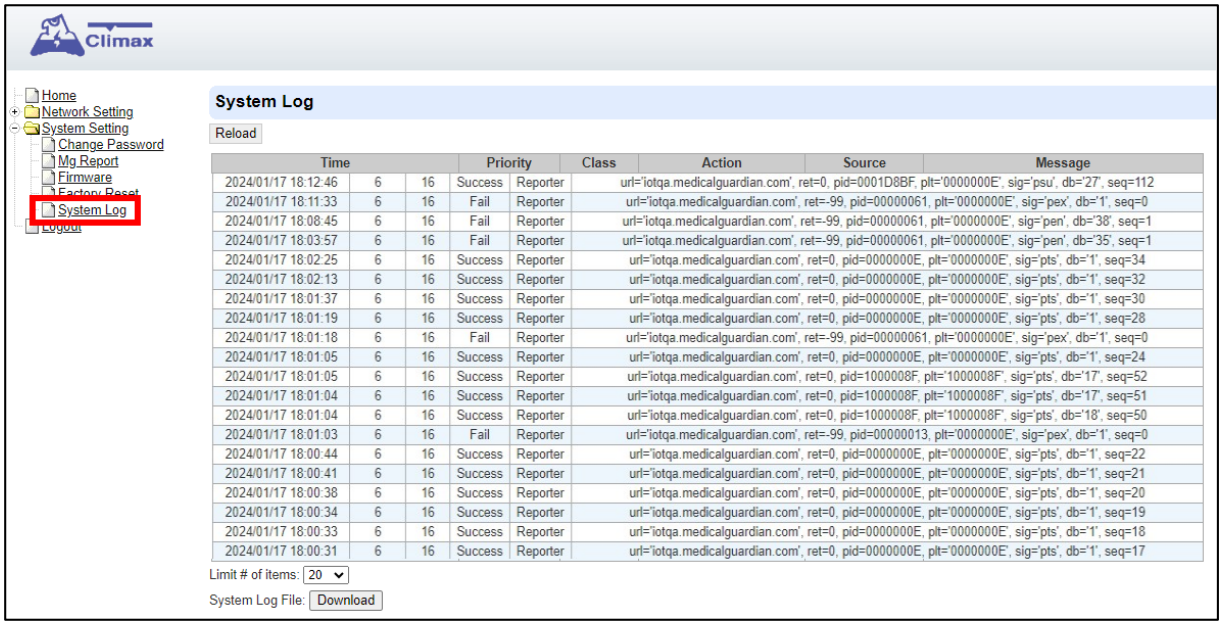

Time			Priority		Class	Action	Source	Message
2024/01/17 18:12:46	6	16	Success	Reporter		url='iotqa.medicalguardian.com', ret=0, pid=0001D8BF, plt='0000000E', sig='psu', db='27', seq=112		
2024/01/17 18:11:33	6	16	Fail	Reporter		url='iotqa.medicalguardian.com', ret=-99, pid=00000061, plt='0000000E', sig='pex', db='1', seq=0		
2024/01/17 18:08:45	6	16	Fail	Reporter		url='iotqa.medicalguardian.com', ret=-99, pid=00000061, plt='0000000E', sig='pen', db='38', seq=1		
2024/01/17 18:03:57	6	16	Fail	Reporter		url='iotqa.medicalguardian.com', ret=-99, pid=00000061, plt='0000000E', sig='pen', db='35', seq=1		
2024/01/17 18:02:25	6	16	Success	Reporter		url='iotqa.medicalguardian.com', ret=0, pid=0000000E, plt='0000000E', sig='pts', db='1', seq=34		
2024/01/17 18:02:13	6	16	Success	Reporter		url='iotqa.medicalguardian.com', ret=0, pid=0000000E, plt='0000000E', sig='pts', db='1', seq=32		
2024/01/17 18:01:37	6	16	Success	Reporter		url='iotqa.medicalguardian.com', ret=0, pid=0000000E, plt='0000000E', sig='pts', db='1', seq=30		
2024/01/17 18:01:19	6	16	Success	Reporter		url='iotqa.medicalguardian.com', ret=0, pid=0000000E, plt='0000000E', sig='pts', db='1', seq=28		
2024/01/17 18:01:18	6	16	Fail	Reporter		url='iotqa.medicalguardian.com', ret=-99, pid=00000061, plt='0000000E', sig='pex', db='1', seq=0		
2024/01/17 18:01:05	6	16	Success	Reporter		url='iotqa.medicalguardian.com', ret=0, pid=0000000E, plt='0000000E', sig='pts', db='1', seq=24		
2024/01/17 18:01:05	6	16	Success	Reporter		url='iotqa.medicalguardian.com', ret=0, pid=1000008F, plt='1000008F', sig='pts', db='17', seq=52		
2024/01/17 18:01:04	6	16	Success	Reporter		url='iotqa.medicalguardian.com', ret=0, pid=1000008F, plt='1000008F', sig='pts', db='17', seq=51		
2024/01/17 18:01:04	6	16	Success	Reporter		url='iotqa.medicalguardian.com', ret=0, pid=1000008F, plt='1000008F', sig='pts', db='18', seq=50		
2024/01/17 18:01:03	6	16	Fail	Reporter		url='iotqa.medicalguardian.com', ret=-99, pid=00000013, plt='0000000E', sig='pex', db='1', seq=0		
2024/01/17 18:00:44	6	16	Success	Reporter		url='iotqa.medicalguardian.com', ret=0, pid=0000000E, plt='0000000E', sig='pts', db='1', seq=22		
2024/01/17 18:00:41	6	16	Success	Reporter		url='iotqa.medicalguardian.com', ret=0, pid=0000000E, plt='0000000E', sig='pts', db='1', seq=21		
2024/01/17 18:00:38	6	16	Success	Reporter		url='iotqa.medicalguardian.com', ret=0, pid=0000000E, plt='0000000E', sig='pts', db='1', seq=20		
2024/01/17 18:00:34	6	16	Success	Reporter		url='iotqa.medicalguardian.com', ret=0, pid=0000000E, plt='0000000E', sig='pts', db='1', seq=19		
2024/01/17 18:00:33	6	16	Success	Reporter		url='iotqa.medicalguardian.com', ret=0, pid=0000000E, plt='0000000E', sig='pts', db='1', seq=18		
2024/01/17 18:00:31	6	16	Success	Reporter		url='iotqa.medicalguardian.com', ret=0, pid=0000000E, plt='0000000E', sig='pts', db='1', seq=17		

- **Limit # of items:** Click to select how many events are dislayed on the webpage.
- **System Log File Download:** Click to download a detailed log file into your computer for more information.

3. LTN-3 Locator

3.1. Parts Identification

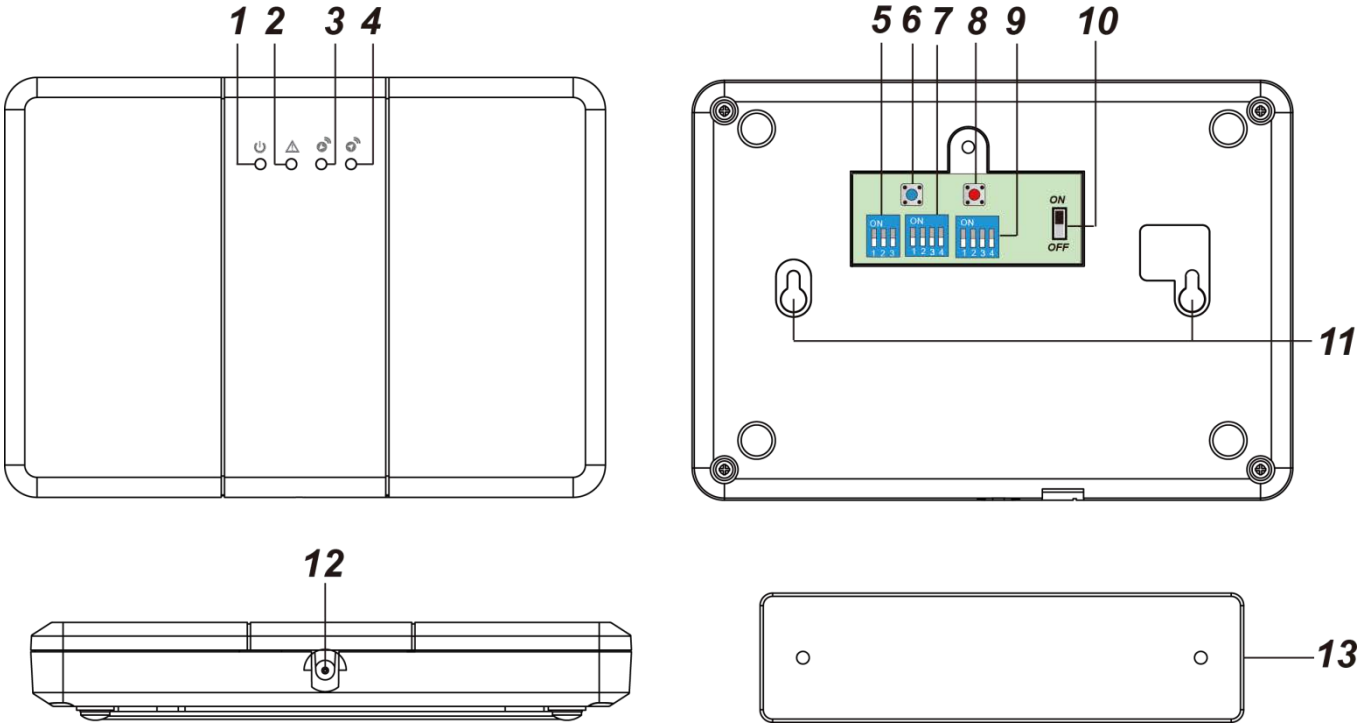

1. **Power LED (Green)**

   On – AC Power supplied

   Slow Flash – AC Power disconnected

2. **Fault LED (Red)**

   On – Low Battery

3. **RX: Receive LED (Red)**

   Flashes once – When receiving a signal transmission

4. **TX Transmit LED (Red / Green)**

   Flashes Red once – When transmitting a signal

   Flashes Green once – When receiving acknowledgement from the Base Unit / Repeater

5. **Dip Switch Set 2 (Group)**

6. **TEST button**

   - Press once to transmit a test signal for range test.
   - Press and hold for 3 seconds to transmit a learning code.

7. **Dip Switch Set 1 (Setting)**

8. **RESET button**

   - Press the button to reset the Locator and send a “power-on check-in” signal.

9. **Dip Switch Set 6 (Range)**

10. **Battery Switch**

11. **Mounting Holes**

12. **DC Jack**

13. **Mounting Bracket**

3.2. Power Suppply

AC Power Adaptor

- A DC 12V 1A switching power adaptor is required to connect to a wall outlet to power the Locator. Be sure only to use an adapter with the appropriate AC voltage rating to prevent component damage.
- When the AC power is disconnected, the Locator will transmit signal to Base Unit to report the status.

Rechargeable Battery

- In addition to the adapter, there is a 7.2V 1100mAh Ni-MH rechargeable battery pack inside the Locator, which serves as a backup in case of a power failure.
- During normal operation, the AC power adapter is used to supply power to the Locator and at the same time recharge the battery. Slide the Battery Switch to ON to activate and charge the battery. It takes approximately 32 hours to fully charge the battery
- When low battery voltage is detected, the Locator will transmit signal to Base Unit to report the low battery status.

3.3. Features

- **Queue Buffer**
  - Each Locator can store up to 200 signals sent from Geo-Pendants (GPT-1-FS) and 300 signals from other devices at the same time, and transmit the signals to Base Unit / Repeater one by one
  - During transmission, the Locator takes the data from the Queue Buffer one-by-one following First-in-First-out algorithm.
  - If a signal received already exists in the Queue Buffer, this signal will be ignored.
  - When the Queue Buffer is full, the Locator will not be able to receive any more signals from devices.
- **Supervision**
  - The Locator transmits supervision signal every hour to the Base Unit for user to monitor the Locator operation status.
- **RSSI Detection**
  - Upon receiving a signal transmitted from accessory device, the Locator checks the signal strength and relay the RSSI value to Repeater/Base Station as it forwards the signal.
- **Geo Pendant (GPT-1-FS) Monitoring**

- The Geo Pendant automatically transmits keep-alive signals at least 3 times per minute. If the keep-alive signal is received by the Locator, it indicates the Geo Pendant is within the locator signal range.
- When a Locator fails to receive keep-alive signal from an existing Geo Pendant previously in range for 150 seconds, the Locator will transmit an Exit (GEO-OUT) signal to the base unit to indicate the Geo Pendant has left its signal range. If the keep-alive signal is received again by the Locator, the Geo Pendant has entered the Locator's signal range again.

- **Frequency Hopping Selection**
  - Three groups are available, each offering a maximum of 24 channels for selection. For more information, please refer to the ***Dip Switch Setting- Dip Switch Set 2 (Group) & Dip Switch Set 1 (Setting)*** for details.

- **RF Receiving Range Adjustment**
  - By setting the Dip Switch Set 6, the Locator's RF receiving range can be adjusted in 4 levels to determine its coverage area. Please refer to ***Dip Switch Setting-Dip Switch Set 6 (Range)*** for details.
  - A shorter range provides accurate device location but may require more locators for comprehensive coverage. A wider range reduces the number of locators needed, but compromises location accuracy.

3.4. Dip Switch Setting

The Locator contains three Dip Switch blocks for adjusting frequency hopping or RF receving range.

- After changing Dip Switch setting, **press the Reset Button to reset** the Locator, or disconnect and reconnect power supply to apply new settings.

1. Dip Switch Set 2 (Group)

The Dip Switch Set 2 contains 3 dip switches for setting Group Frequency. There are 3 Groups available for setting.

SW2-1	SW2-2	SW2-3	Group
On	Off	Off	Group1
Off	On	Off	Group2
Off	Off	On	Group3

GROUP 1 frequency: 906.32 ~ 914.60 MHz, with spacing of 360KHz between each channel.

GROUP 2 frequency: *906.44 ~ 914.72 MHz, with spacing of 360KHz between each channel.*

GROUP 3 frequency: *906.56 ~ 914.84 MHz, with spacing of 360KHz between each channel.*

<NOTE>

☞ **Group Number must be identical for the Base Station and all Locators and Repeaters.**

2. Dip Switch Set 1 (Setting)

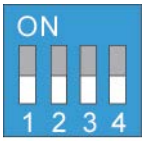

For setting the Channel Number.

SW1-1	SW1-2	SW1-3	SW1-4	Channel Number
-	-	Off	Off	24 Channels
-	-	Off	On	18 Channels
-	-	On	Off	12 Channels
-	-	On	On	6 Channels

<NOTE>

☞ **The Locator's Channel Number must be identical to the Base Unit and Repeater Channel Numbers.**

3. Dip Switch Set 6 (Range)

The Locator's RF receiving range can be adjusted in 4 levels to define its coverage area.

*The RF range may be influenced by the surrounding environment. Please conduct a range test to accurately determine the effective range.

SW1-1	SW1-2	SW1-3	SW1-4	RF Receiving Range
Off	Off	Off	Off	＞ 500M
On	Off	Off	Off	
Off	**On**	Off	Off	Up to 500M
Off	Off	**On**	Off	Up to 300M
Off	Off	Off	**On**	Up to 150 M

<NOTE>

☞ Set **only one switch to the ON position at a time** to determine the range level. If multiple switches are ON, the range level is determined by the switch with the lowest number.

For instance, if switches 1, 2, and 3 are set to ON, the attenuation is determined by switch 1.

3.5. Learning Locator into Base Unit / Repeater

The Locator must be learnt into the Base Unit for the Base Unit to receive signals transmitted from the Locator.

If the Base Unit is beyond the Locator's signal range and additional Repeater deployment is required to relay the signals, the Locator must be learnt into the Repeater which relays its signals.

- To learn in the Locator:
  1. Put the Base Unit or Repeater into Learn Mode, refer to Base Unit or Repeater section for details.
  2. Press and hold the Test Button on the Locator for 3 seconds to transmit a learn signal, the Locator will emit 3 beeps to confirm
  3. If the Base Unit or Repeater receives the learn code, it will emit a long beep to confirm.

Walk Test

1. After the Locaor is learned into the Base Unit or the Repeater, place the Locaor in the desired installation location and press the test button to transmit a test signal to the Base Unit or Repeater.
2. If the Base Unit or Repeater receives the test signal, it will send an acknowledgement to the Locator. The Locater's TX Transmit LED will flash Green when receiving acknowledgement from the Base Unit or Repeater.

3.6. Mounting the Locator

The Locator can be wall mounted according to instructions below:

1. Choose a suitable location for the Locator where mains power is accessible.
2. Find the wall mounting bracket provided, use the holes on the bracket to mark mounting location on the wall.
3. Drill holes into marked location and insert wall plugs if required, screw the bracket onto mounting location.

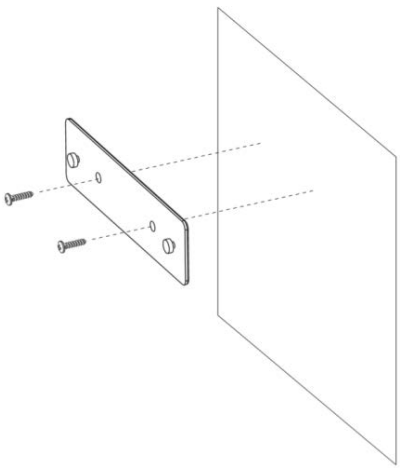

4. Hook the Locator on the mounting bracket,

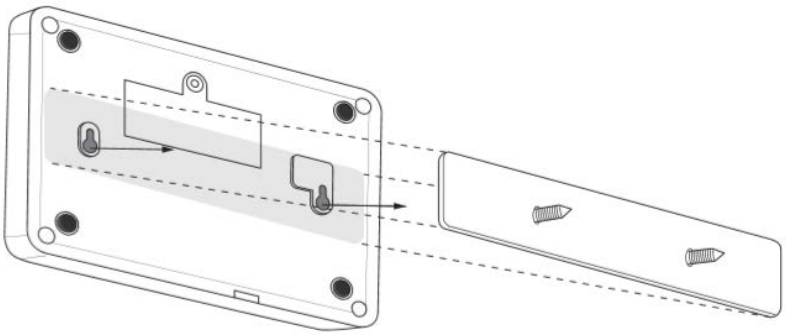

5. Hold the Locator and gently push it downwards as shown below.

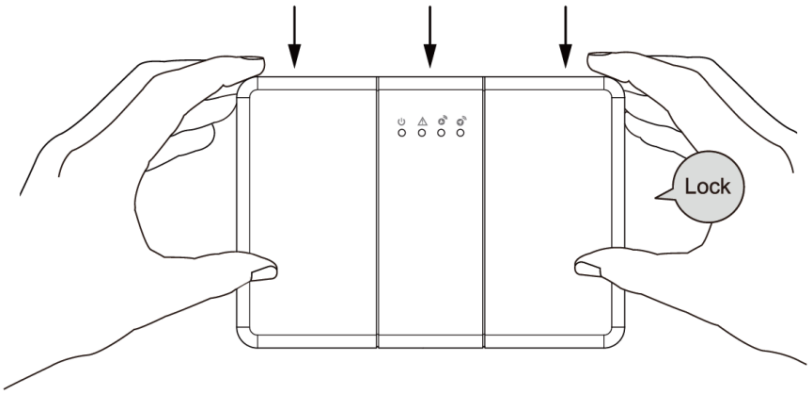

4. RPN-3 Repeater

4.1. Parts Identification

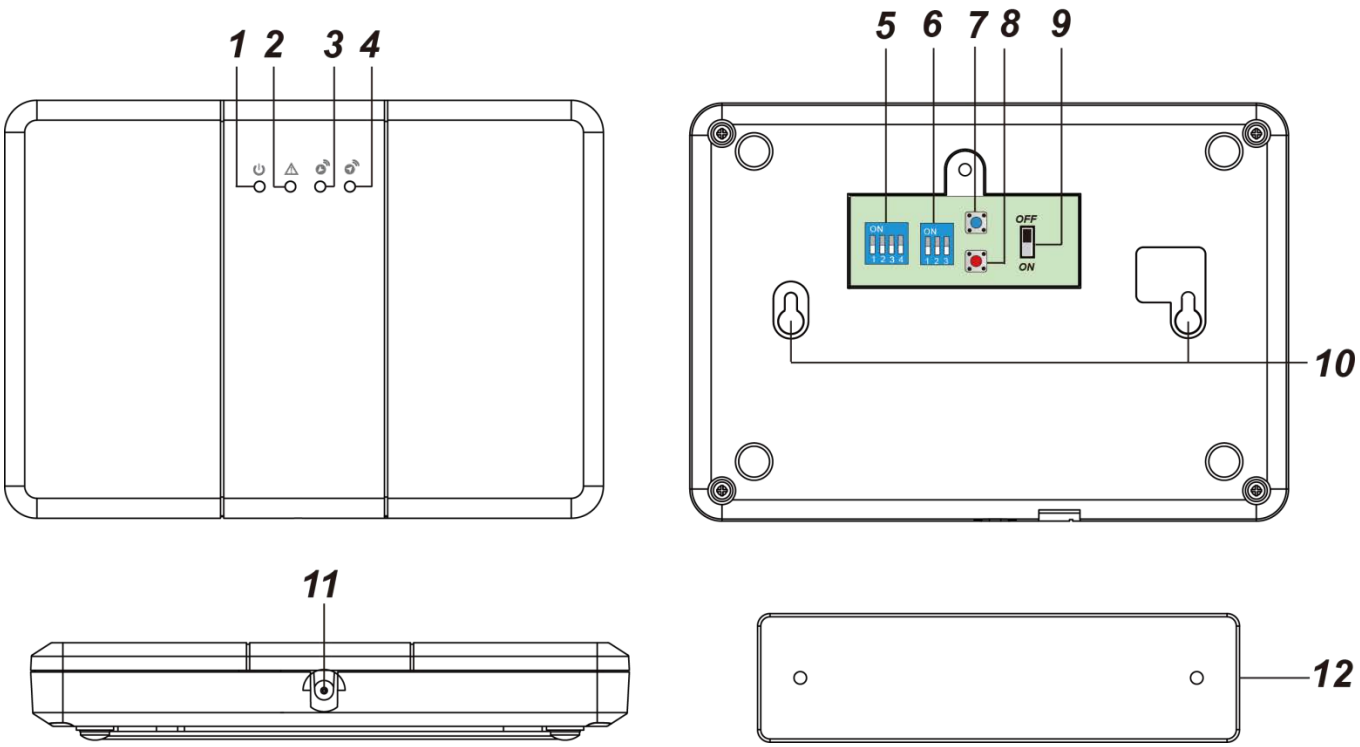

1. **Power LED (Green)**

   On – AC Power supplied

   Slow Flash – AC Power disconnected

2. **Fault LED (Red)**

   On – Low Battery

3. **RX: Receive LED (Red)**

   Flashes once – When receiving a signal transmission

   Slow Flash – Repeater under Learning Mode

4. **TX Transmit LED (Red / Green)**

   Flashes Red once – When transmitting a signal

   Flashes Green once – When receiving acknowledgement from the Base Unit / Repeater

5. **Dip Switch Set 1 (Setting)**
6. **Dip Switch Set 2 (Group)**
7. **TEST button**
   - Press once to transmit a test signal for range test.
   - Press and hold for 3 seconds to transmit a learning code.
8. **RESET button**
   - Press the button to reset the Repeater and send a “power-on check-in” signal.
9. **Battery Switch**
10. **Mounting Holes**
11. **DC Jack**
12. **Mounting Bracket**

4.2. Power Suppply

AC Power Adaptor

- A DC 12V 1A switching power adaptor is required to connect to a wall outlet to power the Repeater. Be sure only to use an adapter with the appropriate AC voltage rating to prevent component damage.
- When the AC power is disconnected, the Repeater will transmit signal to Base Unit to report the status.

Rechargeable Battery

- In addition to the adapter, there is a 7.2V 1100mAh Ni-MH rechargeable battery pack inside the Repeater, which serves as a backup in case of a power failure.
- During normal operation, the AC power adapter is used to supply power to the Repeater and at the same time recharge the battery. Slide the Battery Switch to ON to activate and charge the battery. It takes approximately 32 hours to fully charge the battery.
- When low battery voltage is detected, the Repeater will transmit signal to Base Unit to report the low battery status.

4.3. Features

- **Supervision**
  - The Repeater transmits supervision signal every hour to the Base Unit for user to monitor the Repeater operation status.
- **Frequency Hopping Selection**
  - Three groups are available, each offering a maximum of 24 channels for selection. For more information, please refer to the **Dip Switch Setting** section.

4.4 Dip Switch Setting

The Repeater contains two Dip Switch blocks for adjusting frequency hopping.

- After changing Dip Switch setting, **press the Reset Button to reset** the Repeater, or disconnect and reconnect power supply to apply new settings.
- For Dip SW1-1, please change setting when the Repeater is powered to enter or leave learning mode, because DIP Switch 1-1 is only valid when the Repeater is powered.

1. Dip Switch Set 1 (Setting)

The Dip Switch Set 1 is used to set number of channels, or to learn in Locators/Repeaters.

SW1-1	SW1-2	SW1-3	SW1-4	Channel Number
-	Off	Off	Off	24 Channels
-	Off	Off	On	18 Channels
-	Off	On	Off	12 Channels
-	Off	On	On	6 Channels
On	-	-	-	Learning Mode

<NOTE>

☞ **Channel number setting must be identical for the Base Unit and all Locators and Repeaters.**

2. Dip Switch Set 2 (Group)

The Dip Switch Set 2 contains 3 dip switches for setting Group Frequency. There are 3 Groups available for setting.

SW2-1	SW2-2	SW2-3	Group
On	Off	Off	Group1
Off	On	Off	Group2
Off	Off	On	Group3

GROUP 1 frequency: 906.32 ~ 914.60 MHz, with spacing of 360KHz between each channel.

GROUP 2 frequency: *906.44 ~ 914.72 MHz, with spacing of 360KHz between each channel.*

GROUP 3 frequency: *906.56 ~ 914.84 MHz, with spacing of 360KHz between each channel.*

<NOTE>

☞ **Group Number must be identical for the Base Unit and all Locators and Repeaters.**

4.5 Learning

- The Repeater must be learnt into the Base Unit for the Base Unit to receive signals transmitted from the Repeater.
- The Locator must be learnt into the Repeater that receives and relays its signal.
- If multiple Repeaters are used to relay signals, the Repeater must be learnt into its next Repeater in line of signal transmission to relay the signals.

- **Learnig Repeater into the Base Unit**

  1. Put the Base Unit into Learn Mode, refer to Base Unit section for details.
  2. Press and hold the Test Button on the Repeater for 3 seconds to transmit a learn signal, the Repeater will emit 3 beeps to confirm
  3. If the Base Unit receives the learn code, it will emit a long beep to confirm.

  Walk Test

  1. After the Repeater is learned into the Base Unit, place the Repeater in the desired installation location and press the test button to transmit a test signal to the Base Unit.
  2. If the Base Unit receives the test signal, it will send an acknowledgement to the Repeater. The Repeater's TX Transmit LED will flash Green when receiving acknowledgement from the Base Unit.

- **Learning Locator / Repeater into the Repeater**

  1. Slide Dip Switch SW1-1 to **ON**. The Repeater will emit a long beep and Red LED (RX: Receive LED) will begin to flash slowly to indicate it is now under learn mode.
  2. Press and hold the Test Button of the Locator/Repeater to be learned for 3 seconds to transmit a learn code.
     - When the Repeater receives the learn code, it will emit **a long beep** to indicate learning is successful.
     - When the Repeater receives learn code from an already learnt in Locator / Repeater, it will emit **2 beeps**.
     - When the Repeater receives learn code and its device numbers are full (100 devices), it will emit **4 beeps** to indicate it cannot learn in any more device.
  3. After complete learning, slide Dip Switch SW1-1 to **OFF**. The Repeater will emit a long beep, the Red LED will stop flashing to indicate it now returns to normal mode.

  Walk Test

  1. After the Locator or Repeater is learned into the Repeater, place the learned-in Locator or learned-in Repeater in the desired installation location and press the test button to transmit a test signal to the current Repeater.

2. If the current Repeater receives the test signal, it will send an acknowledgment to the learned-in Locator or learned-in Repeater. The learned-in Locator's or learned-in Repeater's TX Transmit LED will flash green when receiving acknowledgment from the current Repeater.

4.6. Clear Mode

- Clear Mode is used to remove all learned-in locator(s) and/or repeater(s) from the current Repeater.

1. Slide Dip Switch SW1-1 to **ON**. The Repeater will emit a long beep and Red LED will begin to flash slowly to indicate it is now under learn mode.
2. Press and hold the Test Button of the Repeater for 5 seconds until the Repeater emits a long beep to indicate all learnt-in devices, including locator(s) and/or repeater(s), have been cleared.
3. Slide Dip Switch SW1-1 to **OFF**. The Repeater will emit a long beep, the Red LED will stop flashing to indicate it now returns to normal mode.

4.7. Factory Reset

- Performing factory reset on the repeater will remove all learned-in locators and/or repeaters from it and also clear the repeater's memory of the Base Unit/Repeater in which it is learned.

1. Slide Dip Switch SW1-1 to **ON**; press and hold the Test Button while pressing the Reset Button once to re-power on the Repeater.
2. Keep holding the Test Button, and then release it until the Repeater emits 3 beeps and the Red LED (RX: Receive LED) begins to flash every second to indicate all learned-in repeaters/locators and Base Unit/Repeater in which the current Repeater is learned have been cleared.
3. Slide Dip Switch SW1-1 to OFF. The Repeater will emit a long beep, the Red LED will stop flashing to indicate it now returns to normal mode.

4.8. Mounting the Repeater

The Repeater can be wall mounted according to instructions below:

1. Choose a suitable location for the Repeater where mains power is accessible.
2. Find the wall mounting bracket provided, use the holes on the bracket to mark mounting location on the wall.
3. Drill holes into marked location and insert wall plugs if required, screw the bracket onto mounting location.

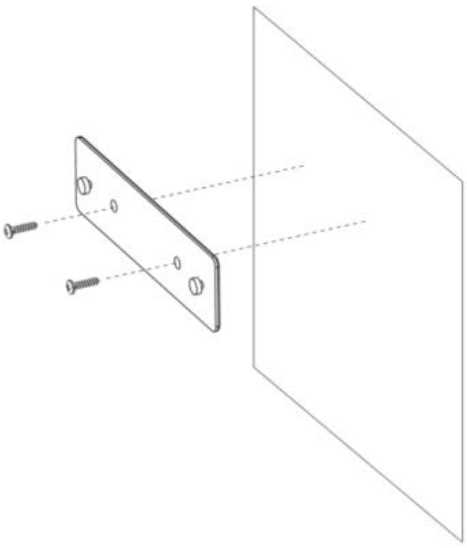

4. Hook the Repeater on the mounting bracket.

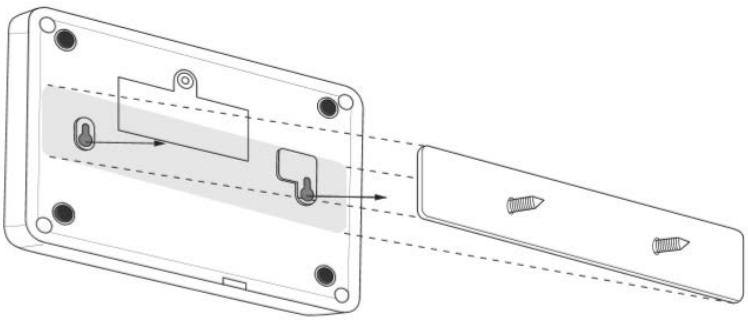

5. Hold the Repeater and gently push it downwards as shown below.

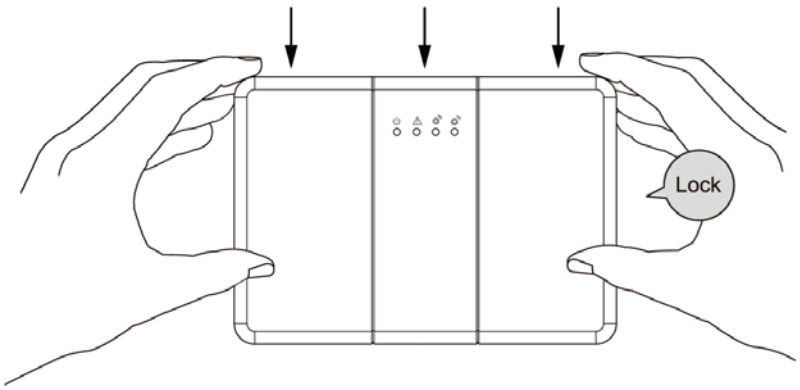

5. GPT-1-FS Geo Pendant & Fall Sensor

GPT-1-FS is a Geo Pendant that can work with Locator system to provide alerts when the user leaves the Locator's signal range. The device also functions as a fall sensor, allowing users to summon help in an emergency by manual button press or auto fall detection.

5.1. Parts Identification

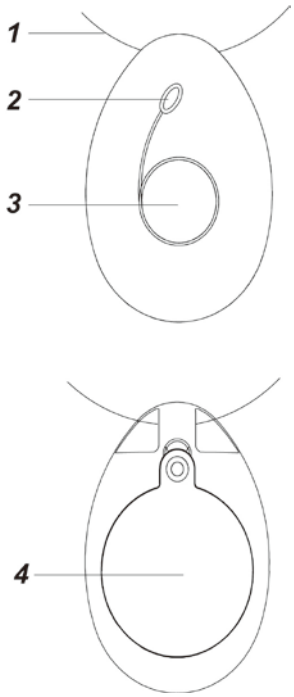

1. Lanyard Loop

2. Green/Red LED

- Green LED FLASH for 1 second: When powered on.
- Green LED FLASH: Transmitting a signal.
- Red LED FLASH: Transmitting a signal under low battery condition.
- Red LED FLASH for 3 times: Low battery status detected when powered on.
- Green and Red LEDs Flash in an alternating manner for 3 times– Green On, Red on, Green on, Red on, Green on, and then Red on: Geo Pendant is activated.

3. Active Button

- Press and hold the Active Button more than 2 seconds to trigger an alarm.
- Within 5 seconds after activating the alarm, press and hold the Active Button for 5 seconds to send a Cancel Code.

4. Battery Compartment Cover

5.2. Power Supply

■ Battery

GPT-1-FS comes pre-installed with a CR2477 3V lithium coin-type battery as its power source. Upon inserting the battery, the device enters "deep sleep mode." To activate the Geo Pendant, the user needs to press the Active Button more than 2 seconds. If the battery voltage is operating normally, the Green LED will light up for one second.

In the case of low battery voltage, a Low Battery signal will be transmitted with signal transmissions. Moreover, when activated under low battery status, the Red LED will flash three times to remind the user to replace the battery.

■ Auto Battery Detection

The Geo Pendant features auto battery detection.

- The Geo Pendant will automatically check the battery voltage and transmit the battery status with signal transmissions.

5.3. Features

■ Deep Sleep Mode

- After the battery is inserted, GPT-1-FS will enter “deep sleep mode.” When in “deep sleep mode,” all functions of the Geo Pendant/Fall Sensor, including the LED indicators, are disabled.
- The user needs to press the Active Button more than 3 seconds to leave deep sleep mode and activate the device. The Green and Red LEDs will then flash in an alternating manner for 3 times.

■ Geo Tracking / Keep-Alive

- The Geo Pendant automatically transmits keep-alive signals at least 3 times per minute.
- If the keep-alive signal is received by the Locator (LTN-3), it indicates the Geo Pendant is within the Locator’s signal range.
- When a Locator (LTN-3) fails to receive keep-alive signal from an existing Geo Pendant previously in range for **150** seconds, the Locator will transmit an Exit (GEO-OUT) signal to the base to indicate the Geo Pendant has left its signal range. If the keep-alive signal is received again by the Locator, the Geo Pendant has entered the Locator’s signal range again.

■ Fall Detection & Inactivity Detection

If a fall is detected, the sensor will transmit a Fall Detection alarm signal with signal transmissions. If no sudden movement was detected within 10 seconds after the fall detection, the device will transmit another inactivity code.

■ Fall Sensor Usage Recommendations

- Best way to wear a Fall Sensor **(O)**
  A. Let it hang in front of the chest and adjust the necklace length so that the sensor hangs at the bottom of the sternum, as shown in the picture.
  B. Wear the pendant exposed outside and in front of any clothes or heavy/feather jacket.
  C. When a fall occurs, it is best if the Fall Sensor can touch the ground.
- Wrong way to wear a Fall Sensor **(X)**
  A. Wearing the necklace too short (around the clavicle) or too long (below the sternum) is likely to cause false triggers or no response.
  B. Wearing the Fall Sensor inside a chest pocket will lead to a non-detected condition.

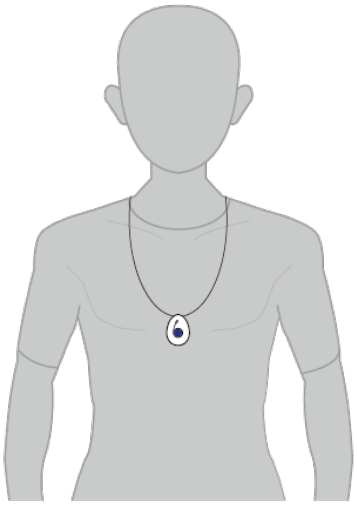

- Carefully place the Fall Sensor on a desk when you are not using it to avoid triggering a false alarm.
- Due to the nature of fall detection mechanism, fall detection cannot be 100% accurate. False alarms or detection failures during daily use cannot be completely avoided. Please utilize the Active Button to activate alarm manually when needed to ensure safety.

■ Sleep Mode (for Fall Sensor)

- If the Fall Sensor remains stationary for more than 3 hours, it will enter Sleep Mode. If movement is detected during sleep mode, the Fall Sensor will start a 1-minute countdown to return to normal operation mode.
- The Fall detection function is disabled during the 1-minute timer, allowing the user to put on the Fall Sensor without activating a false alarm.
- When the 1-minute timer expires, the Geo Pendant will return to normal operation. **<Note>** Pressing the Active Button will halt the timer and resume detection immediately.

■ Testing

During the testing, do not trigger the Fall Sensor twice within a 10-second interval.

6. Other Accessory Device

For other accessory devices, such as Panic Button (PB-23), Pull Cord (PCU-5), Emergency Strobe Light (ESL-1), or Sensor Pad Transmitter (SPT-1), please refer to respective device user manual for details.

7. Specification

- **The Base Unit (BUN-3):**
  - 12V 1A adaptor
  - 7.2V 2300mAh NI-MH Battery Pack
  - Receiving frequency: 906 ~ 915 MHz (24 channels hopping) from locator or repeater

- **The Locator (LTN-3):**
  - 4 adjustment levels of RF receiving range for accessory signals
  - 12V 1A adaptor
  - 7.2V 1100mAh NI-MH Battery Pack
  - Receiving frequency: 919 MHz from accessories
  - Transmitting frequency: 906 ~ 915 MHz (24 channels hopping) to repeater or base unit

- **The Repeater (RPN-3) :**
  - 12V 1A adaptor
  - 7.2V 1100mAh NI-MH Battery Pack
  - Receiving frequency: 906 ~ 915 MHz (24 channels hopping) from locator or repeater
  - Transmitting frequency: 906 ~ 915 MHz (24 channels hopping) to repeater or base unit

- **Accessory Devices (GPT-1 / GPT-1-FS / PB-23 / PCU-5 / ESL-1 / SPT-1) :**
  - Transmitting frequency: 919 MHz to locator

Federal Communication Commission Interference Statement

This equipment has been tested and found to comply with the limits for a Class B digital device, pursuant to Part 15, Part 22/24/27 of the FCC Rules. These limits are designed to provide reasonable protection against harmful interference in a residential installation.

This equipment generates, uses and can radiate radio frequency energy and, if not installed and used in accordance with the instructions, may cause harmful interference to radio communications. However, there is no guarantee that interference will not occur in a particular installation. If this equipment does cause harmful interference to radio or television reception, which can be determined by turning the equipment off and on, the user is encouraged to try to correct the interference by one of the following measures:
. Reorient or relocate the receiving antenna.
. Increase the separation between the equipment and receiver.
. Connect the equipment into an outlet on a circuit different from that to which the receiver is connected.
. Consult the dealer or an experienced radio/TV technician for help.

FCC Caution: To assure continued compliance, any changes or modifications not expressly approved by the party responsible for compliance could void the user's authority to operate this equipment. (Example - use only shielded interface cables when connecting to computer or peripheral devices).

FCC Radiation Exposure Statement

This equipment complies with FCC RF radiation exposure limits set forth for an uncontrolled environment. This equipment should be installed and operated with a minimum distance of 20 centimeters between the radiator and your body.

This transmitter must not be co-located or operating in conjunction with any other antenna or transmitter.

The antennas used for this transmitter must be installed to provide a separation distance of at least 20 cm from all persons and must not be co-located or operating in conjunction with any other antenna or transmitter.

This device complies with Part 15 of the FCC Rules. Operation is subject to the following two conditions:
(1) This device may not cause harmful interference, and (2) This device must accept any interference received, including interference that may cause undesired operation.