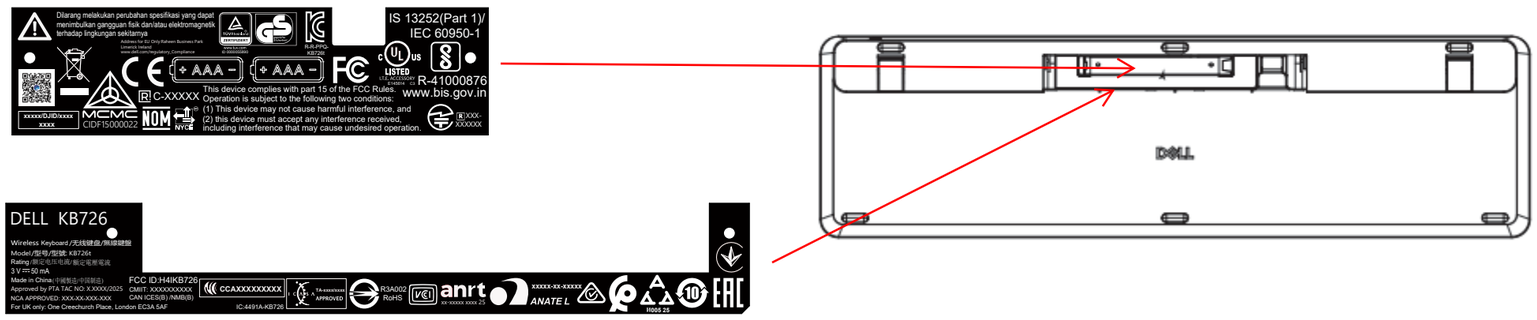
Dilarang melakukan perubahan spesifikasi yang dapat menimbulkan gangguan fisik dan/atau elektromagnetik terhadap lingkungan sekitarnya
IS 13252(Part 1)/ IEC 60950-1
+ AAA -
+ AAA -
R-41000876
www.bis.gov.in
C-XXXXX
This device complies with part 15 of the FCC Rules. Operation is subject to the following two conditions: (1) This device may not cause harmful interference, and (2) this device must accept any interference received, including interference that may cause undesired operation.
CIDF15000022
NOM
DELL
DELL KB726
Wireless Keyboard /无线键盘/無線鍵盤
Model /型号/型號: KB726
Rating /额定电压/电流/額定電壓電流
3 V ⎓ 50 mA
Made in China: (中国制造)
Approved by PTA TAC NO: X.XXXX/2025
NCA APPROVED: XXX.XX-XXX-XXX
For UK only: One Creechurch Place, London EC3A 5AF
FCC ID:H4IKB726
CMIIT: XXXXXXXXXXX
CAN ICES(B) / NMB(B)
CCAXXXXXXXXX
IC-4491A-KB726
R3A002
RoHS
anrt
ANATE L
H009 25

artwork1:1