UNOnext Indoor Air Quality Monitor

UNOC07X011

Packaged user manual ver 1.0.9

2020/9/17

Smarter. Greener. Together.

I. Version information

Version	Description
1.1.0	Official 1st version
1.1.1	Change the default state of the DIP switch's terminal resistor to OFF
1.1.2	Corrected errors, added a description of AutoMode, NFC positions
1.2.0	Updated and simplified purchase order information, replaced icons
1.2.1	Added a description of the NCC's radio wave regulations
1.2.2	Organized the layout, added notices on CO2 automatic calibration
1.2.3	Added a description “4.5 Start Conditions,” converted sensor specifications to Chinese
1.3.0	Changed dry contacts to relay control, modified the control structure diagram for three-speed and single-speed ventilation equipment to make it more universal

II. Overview

UNOnext is an all-in-one air quality sensor with the ability to detect temperature, humidity, carbon dioxide, PM2.5, PM10, total volatile organic compounds (VOCs), formaldehyde, carbon monoxide, and ozone, which can be monitored visually through sensors. The device can be directly connected to ventilation equipment to improve air quality, which not only saves energy, but also lets users breathe fresh air with peace of mind.

UNOnext is suitable for many different types of environments, including residential buildings, commercial buildings, medical institutions, and sensitive places, such as nursing homes and day care centers, and detects various types of air pollution that may have an adverse effect on the human body.

UNOnext provides NFC tags, which can be used to easily open the APP and view real-time information on the site's air quality (only the UNO-C07X011 model)

III. Keypad and display description

1. UNOnext appearance description

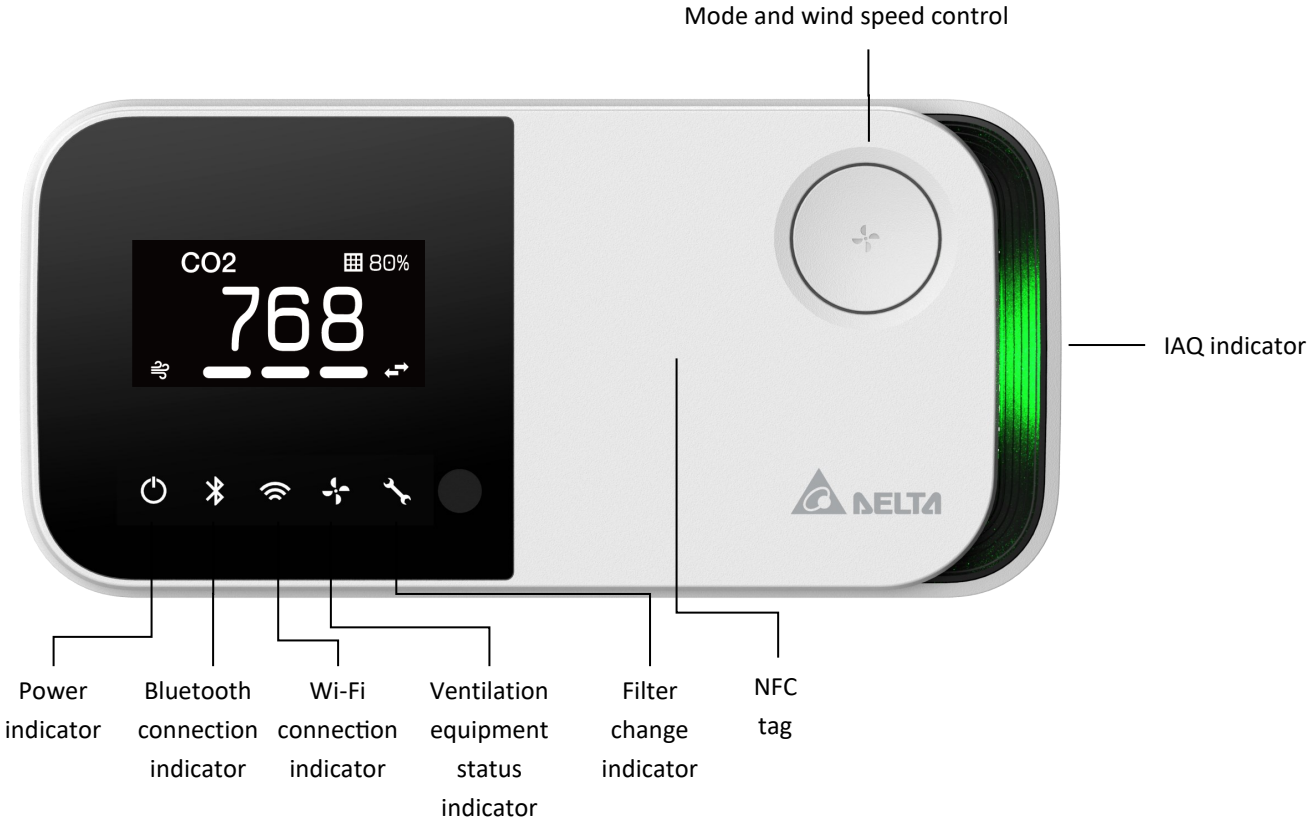

2. Display description

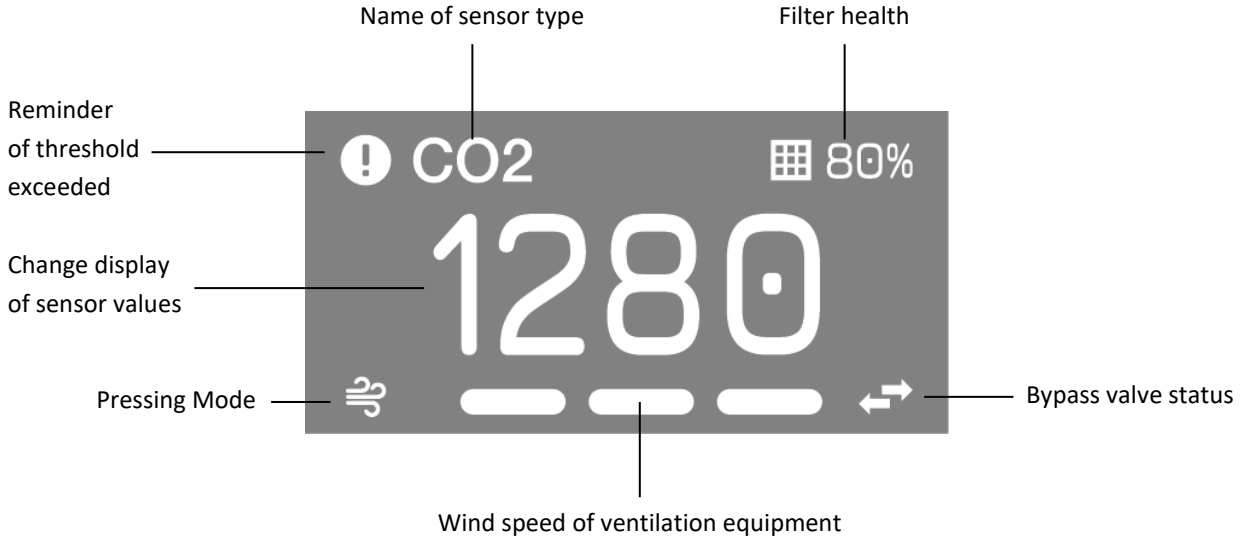

3. Indoor air quality indicator description

Indoor air quality indicator	Color of indicator (status)	PM2.5 (ug/m^3)	PM10 (ug/m^3)	CO2 (ppm)
0-80	Green (Good)	0-28	0-60	400-800
81-100	Yellow (Regular)	29-35	61-75	801-1000
101-400	Red (Poor)	36-140	76-300	1001-4000
401	Purple (Polluted)	>141	>301	>4001

IV. Detailed Description

1. The power indicator will light up after power is connected. If the power indicator does not light up, please make sure that the power cord is firmly installed.

2. The air quality indicator will turn blue after the device is turned on, which means that it is booting up. After booting is complete, it will change color according to the air quality status, in which green is good, yellow is normal, red is poor, and purple is polluted.

3. UNOnext has built-in multiple sets of sensors, and the values will be displayed in a rotation. If an item exceeds the threshold, it will be displayed on the screen.

4. Keypad functions will change based on software settings; the default is “smart sensor control”
If it is set to “smart sensor control", double-press the button (within 5 seconds) to switch the wind speed and work mode. The default is AutoMode and may be switched into the following modes. If the interval between key presses is more than five seconds, ventilation equipment will be turned on and off. It will enter AutoMode when it is turned on again.

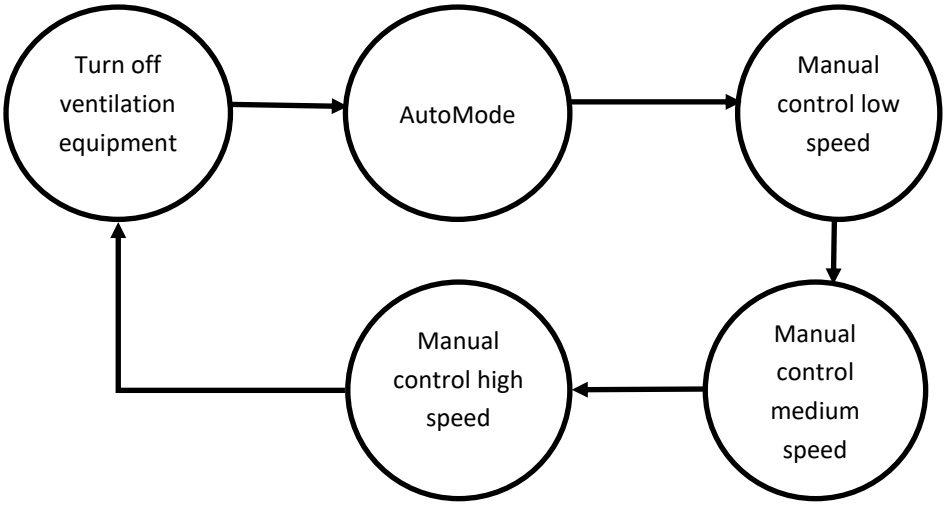

If it is set to "air quality sensing" mode, the keys will be used as the switch of the air quality indicator (DIP switch No. 8 must also be pushed up)

5. AutoMode will turn ventilation equipment on and off depending whether the air quality exceeds the threshold or not. There are two control modes: Turbo and UNOECO. Users can set a threshold on the APP to determine activation conditions (only on the UNO-C07X011 model)

Diagram	AutoMode menu	Description
	Turbo	If it exceeds the threshold, ventilation equipment will operate at full speed and exchange air until the air quality improves
	UNOECO	Depending on air quality, the ventilation equipment will automatically switch between different wind speeds to achieve the three major indicators – silent, power saving, and health The default equipment activation standard for CO2 is 1,000 ppm, PM2.5 is 28 ug/m^3, PM10 is 60ug/m^3, which can be adjusted in the APP, but the color of the indicator light is based on the default range

6. Use the APP for Wi-Fi configuration. The APP will provide instructions on operating procedures. Please verify that the controller you purchased is the Wi-Fi version. The Wi-Fi connection indicator will turn on after connecting to Wi-Fi. (only on the UNO-C07X011 model)

7. The controller was calibrated before leaving the factory, and no additional calibration is required. If the controller is affected by the environment at your site, please contact the distributor for manual calibration.

8. This controller has built-in multiple sets of precision sensors. Collision and vibration during transportation may affect its readings. It is recommended to turn it on and install it, and then wait for about one hour until the chamber reaches balance.

9. After the device is turned on, the sensor needs to warm-up for 10 seconds or less for PM2.5, PM10, and carbon dioxide, and 5 minutes for formaldehyde, carbon monoxide, ozone, and TVOC.

10. Sensor data is updated every 3 to 6 seconds (depending on the type of sensor)

11. When UNOnext is connected to the central control unit, and the central control unit is in control, and UNOnext will indicate that it is currently in remote control mode.

Diagram	Pressing Mode	Description
	Remote control	Connect to the central control unit, which will send control commands.

12. Regardless of whether the central control unit sends a control command, the user presses a physical key, or uses the APP for control, UNOnext will perform the last command that was sent

13. If it is used in a place of business and the owner does not want to let users on site turn it on and off or use the APP to control the device, the owner can use a Modbus command to engage the control lock. When the control lock is engaged, local users cannot perform any operations. If the user manually presses the switch, the image below appears, which means that it cannot be operated by local users.

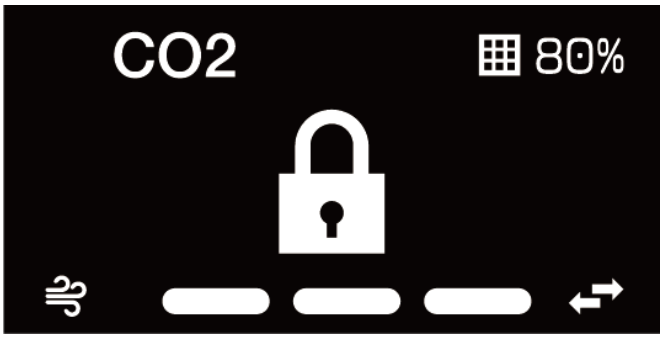

14. Pressing the button in "air quality sensing" mode will turn the air quality indicator on/off. When the power is turned off, the device will remember its last state.

15. CO2 component automatic calibration
The CO2 component is a precision instrument. This product was calibrated at the factory before shipping. After a week of continuous operation, it will be automatically calibrated every week. If the component encounters vibration when it is reinstalled in a different place, the data values may drift.

[Note] Follow the instructions below to facilitate the automatic calibration of CO2 components.

- The product needs continuous power supply, so install it in a fixed position
- The indoor environment reaches the level of the outdoor environment for four consecutive hours each week

V. Product technical parameters

Item	Content
Product dimensions	142x68x42 mm
Terminal block	Maximum of 1.5 mm^2
Rated voltage	9-24VDC +/-10% Or use 12V1A power supply
Power consumption	≦ 5W
Operating temperature	0°C– 50°C
Operating humidity	0%RH –95%RH (Non-condensing)
Storage	-20°C– +70°C
Protection level	IP20
Certification	NCC,FCC/IC, CE, JRF
Accessories	Wall mount x 1, power supply x 1 (optional), external temperature sensor cable x 1 (optional), wall plugs and wall screws, hex head screws, terminal male connectors, serial number sticker x 1

VI. Sensor parameters

Carbon dioxide	
Detection method	Non-dispersive infrared (automatic calibration)
Operating range	350-10000 ppm
Precision	± 30ppm ± 3%
Temperature	
Detection method	Semiconductors
Operating range	0-50 °C (32-122°F)
Precision	± 1.0 °C (± 1.8 °F)
Humidity	
Detection method	Semiconductors
Operating range	0 - 95% rRH
Precision	±5% at 20-80%rH @ 15-30°C (59-86°F)
Fine/Suspended particles	
Detection method	Laser diffraction
Operating range	0-1000 µg/m3
Precision	>100 µg/m3 , ± 10 % <100 µg/m3 , ± 10 µg/m3

Total organic compounds	
Detection method	Metal oxides
Operating range	0-60000ppb
Precision	± 15% (Data tested in laboratory using alcohol)
Formaldehyde	
Detection method	Electrochemistry
Operating range	0-5000 ppb
Precision	±15% @20-50°C
Carbon monoxide	
Detection method	Electrochemistry
Operating range	0-500 ppm
Precision	±20 ppm
Ozone	
Detection method	Electrochemistry
Operating range	0.4-10 ppm
Brightness	
Operating range	0-10000 lux

VII. Product interface definition

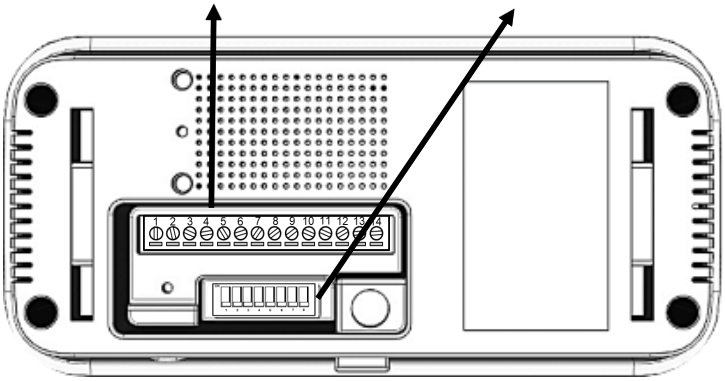

Pin	Pin name	Definition
1	GND	Grounding
2	AI1	Analog input 1 – External temperature sensor
3	AI2	Analog input 2
4	NO4	Relay normal open - HF
5	NO3	Relay normal open - MF
6	NO2	Relay normal open - LF
7	NO1	Relay normal open– ON/OFF
8	B2	Modbus slave B
9	A2	Modbus slave A
10	B1	Modbus host B
11	A1	Modbus host A
12	GND	Grounding
13	Vin	9-24V DC input
14	Vout	9-24V DC output

Table 1. Terminal block pin function definition

Switch Number	Switch Definition	ON	OFF
1	Modbus terminal resistor		■
2	Modbus slave position [3]		■
3	Modbus slave position [2]		■
4	Modbus slave position [1]		■
5	Modbus slave position [0]		■
6	Maximum wind speed [1]		■
7	Maximum wind speed [0]		■
8	Control mode selection		■

* The above are the default states of DIP switches

Table 2. DIP switch function definition

VIII. Wiring diagram – Connecting to the central control unit

The central control unit can read the sensor data of UNOnext and the status of the ventilation equipment via the RS485 physical line and the Modbus RTU protocol

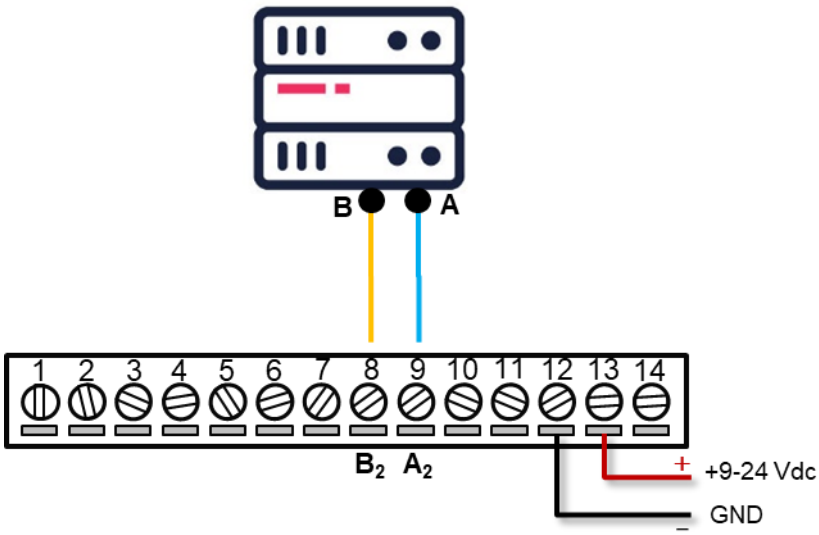

Modbus slave signals can be directly connected with the building automation system for parameter design and data acquisition purposes. UNOnext acts as a Modbus slave device through pin 8 (RS485 B) and pin 9 (RS485 A) of the UNOnext terminal block. The RS485 Baud rate is 9600bps, the parity is 'none', and the default slave address is 0xD0. For detailed settings and data capture fields, see the UNOnext Modbus file

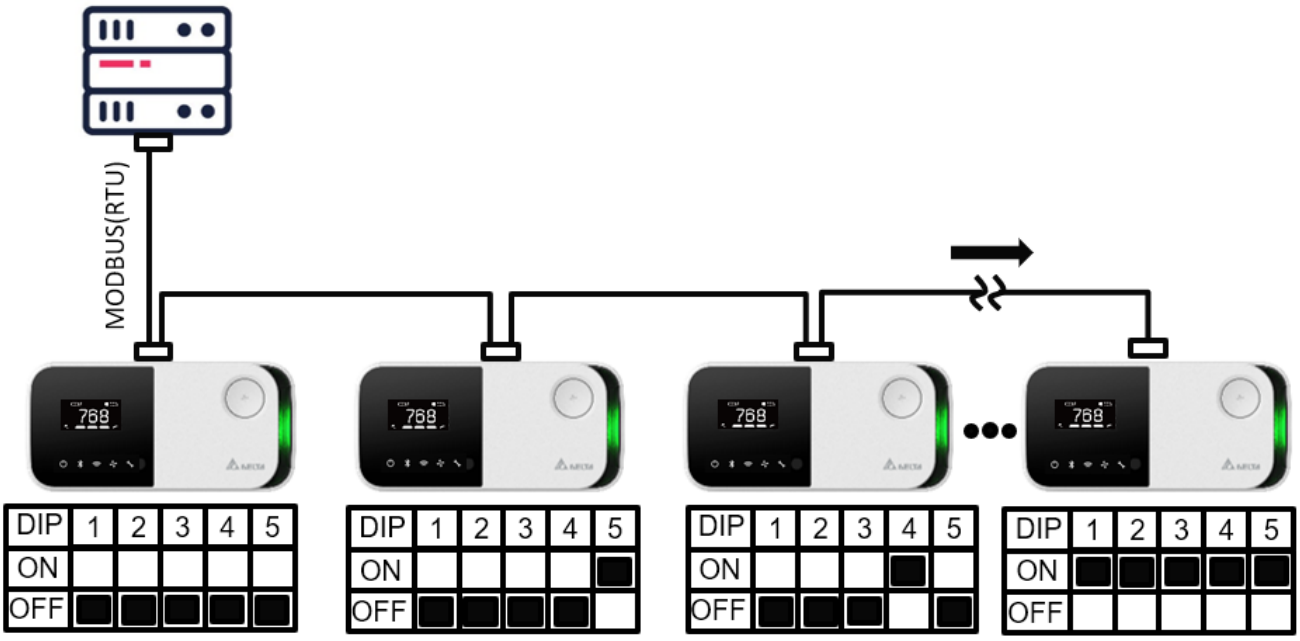

The figure above illustrates the traditional Modbus network architecture. The central control unit can be connected to multiple devices in a linear topology. Cables must be terminated at both ends. Each device has a built-in 120Ω terminal resistor. You can use the first pin of the DIP switch to turn the terminal resistor on or off. Except for the terminal device, which must be set to on, every other slave device must be set to off. The default Modbus slave position of each device is 0xD0, and the slave position of each device must not be repeated. In order for the central control unit to receive the correct data, the second to fourth pins of the DIP switch must be used to set the device slave position.

IX. Wiring diagram – Connecting to ventilation equipment (smart sensor control mode)

Mode 1, Ventilation equipment is controlled through RS485. The wiring diagram is as shown in the figure below. In addition, the 8th pin of the DIP switch must be turned off. The settings are as follows

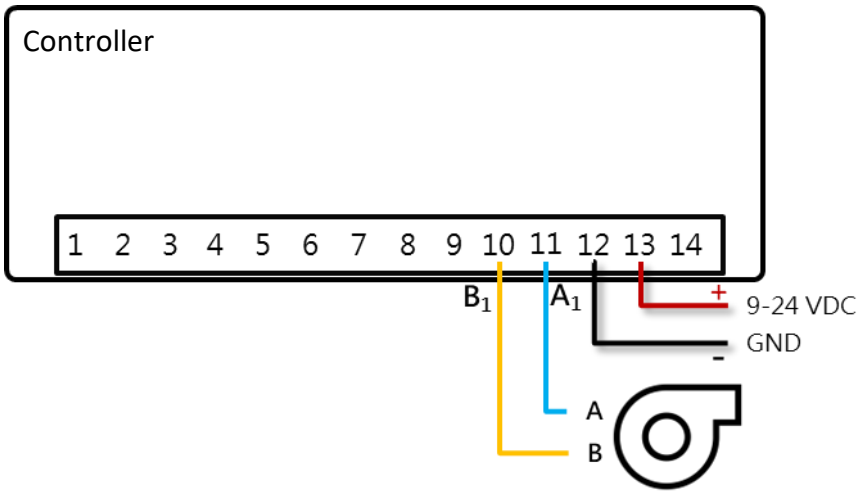

DIP Switches	8
On	
Off	■

I. This controller controls ventilation equipment through RS485. If you do not know whether or not the equipment brand and model is supported, please contact the dealer for technical support before purchase.

II. If, after evaluating the site's environment, ventilation equipment cannot operate at full speed due to certain reasons (excessive noise or vibration, etc.), the maximum wind speed can be set by adjusting the DIP switch. There are three stages that can be set through the 6th and 7th pins of the DIP switch.

DIP	6	7
On		
Off	■	■

Allow Any

DIP	6	7
On		■
Off	■	

Upper limit is low speed

DIP	6	7
On	■	
Off		■

Upper limit is medium speed

DIP	6	7
On	■	■
Off		

Upper limit is high speed

Mode 2, Control the three-speed ventilation equipment through a relay

This controller supports relay output. This controller can control 12V or 24V DC relays through the relay, which can be triggered at low level, and the load of the relay should be based on the specifications of the connected ventilation equipment.

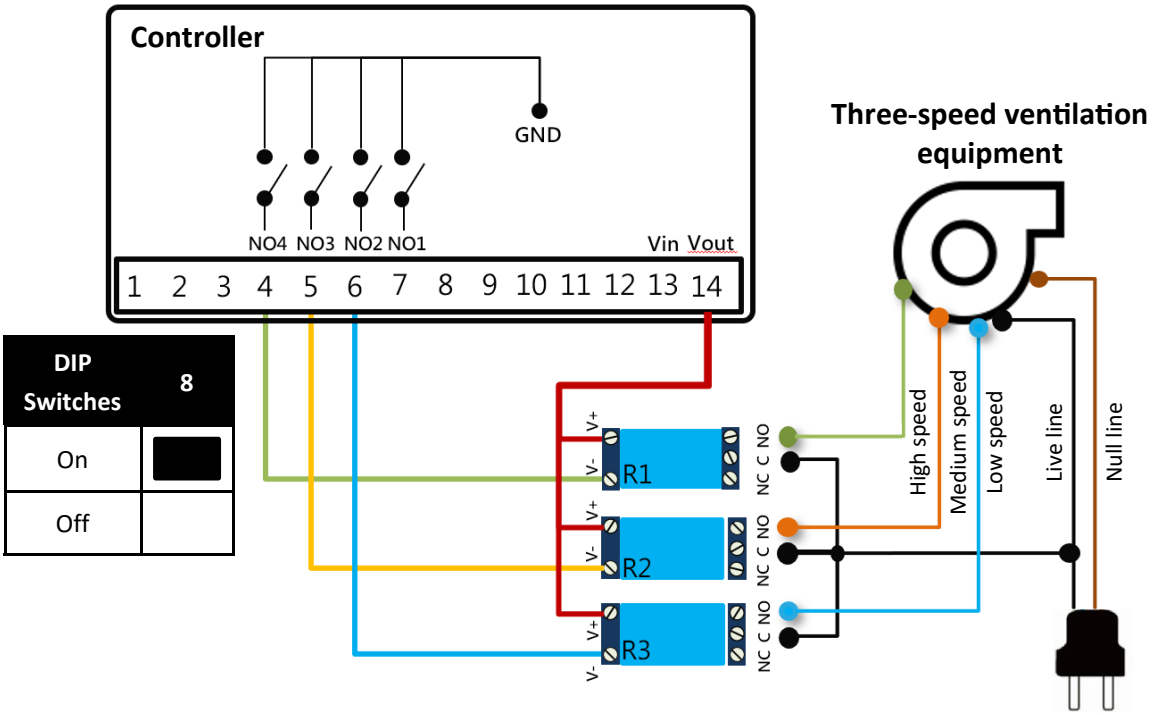

Mode 3, Control single speed ventilation equipment through relay

This controller supports relay output. The controller can control a 12V or 24V DC relay through the relay, which can be triggered at a low level. The load of the relay should be based on the specifications of the connected ventilation equipment.

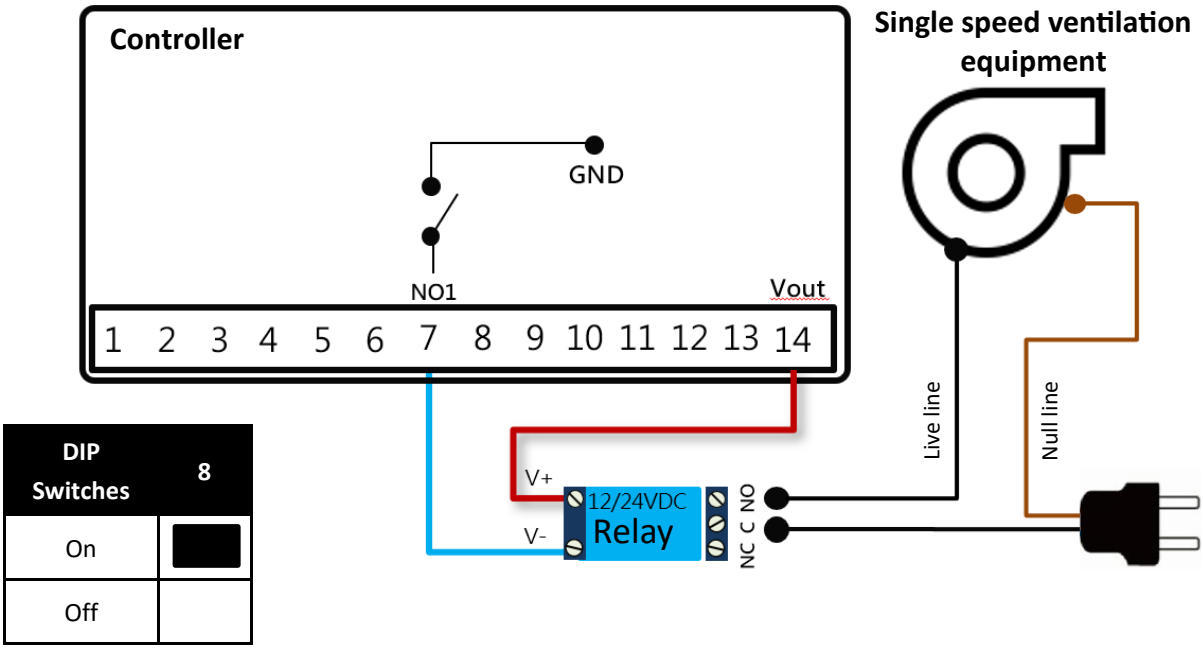

X. Wiring diagram – Installing the external temperature sensor cable (optional)

The product's built-in temperature sensor module has an accuracy of +/- 1°C. If you need more precise temperature sensing, the product can be equipped with temperature sensor cable accessories, allowing for accuracy of about +/- 0.3°C, which can meet more precise environment temperature control requirements. After installation, the default temperature display on the screen will be replaced with the temperature detected by the external temperature sensor cable

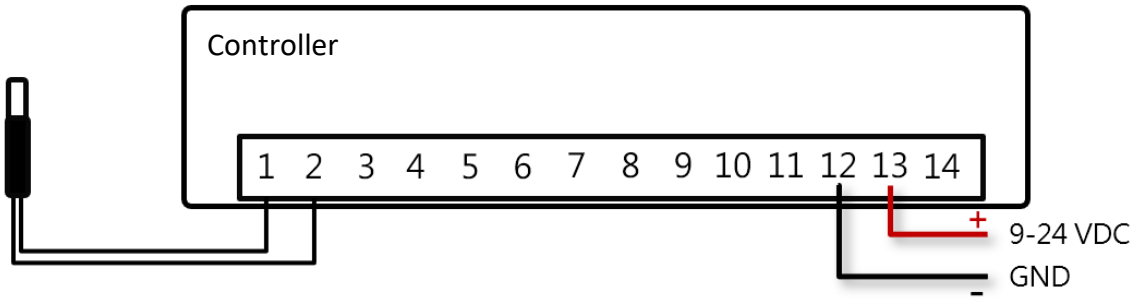

XI. Installation instructions

I. Notice

1. The air quality sensor is recommended to be installed at a height of 80-150 cm.
2. The sensor must be installed in a location with air circulation.
3. In order to ensure the sensor's accuracy, avoid installing the sensor near sunlight and heat sources.
4. UNOnext has a variety of precision sensors inside. Please do not violently strike or cause it to vibrate during installation, as that may cause the sensor readings to drift, and will it take longer to enter a stable and balanced state.

II. Installation method

1. Install the wall mount accessory for UNOnext. Use the wall plugs included in the box to install it on the wall, or install in a power box. The wall mount has screw hole spacing (60mm and 84mm) suitable for power boxes in multiple countries, but the power box must be installed horizontally as shown in Figure 1.
2. This controller uses a 9-24V DC power supply. AC power must be converted to the required power source before installation, or use the power supply provided along with this controller. Verify electrical characteristics in "IV. Technical parameters" for details
3. Verify that the power supply and data lines are laid out according to specifications before installation
4. As shown in Figure 2, install UNOnext on the wall mount and verify that all four buckles are installed and fixed.
5. As shown in Figure 3, use a hexagonal screwdriver to fasten the M4 hex socket screws to complete the installation

III. Power-on verification

1. If the device has been installed, the power indicator will light up after the power is connected, and the air quality indicator will turn blue, which means the device is being turned on at this time. If green or yellow appear, it means that the device has completed booting and the current air quality status has been displayed. If the power indicator does not light up, please verify that the power cord is properly connected and there is power supply.
2. UNO-C07X011 has Bluetooth and Wi-Fi functionality. Users can go to the iPhone app store or Android play store to download the UNOnext APP. After opening the APP, the serial number of the device and sensor values will be displayed. You can refresh to see if the device is already online.

IV. Trial run ("smart sensor control" mode)

1. In RS485 control mode, if the ERV is successfully connected, the ERV indicator will be constantly on or off depending on whether the ERV is on or off. If it is not correctly connected, the ERV indicator will flash to indicate an abnormal connection.
2. In the relay control mode, the ERV indicator will not flash
3. Double-press the physical key to switch the ERV to manual operation. At this time, the ERV indicator is on, and three levels of wind speed will appear. The installer can use this to verify whether or not the equipment is installed correctly.

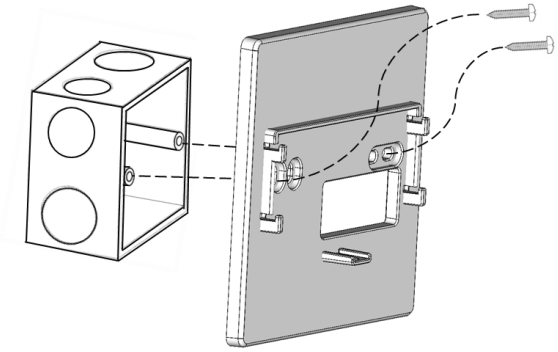

Figure 1

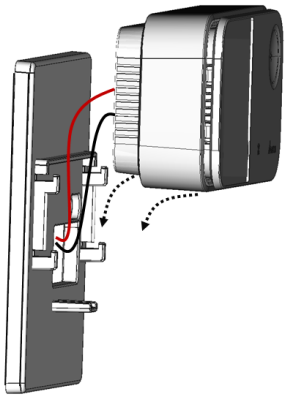

Figure 2

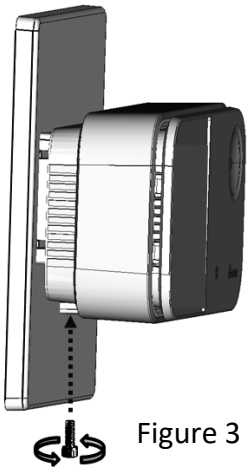

Figure 3

XI. APP and website links

UNOnext is equipped with wireless technology and can use an APP and webpage to monitor the air quality status, which can be obtained using the following QR code. (For the UNO-C07X011 model only), watch the official instructional video to learn how to log in to and use UNOweb.

iOS APP

Android APP

UNOweb

This product is made in Taiwan. The place of origin is No. 256, Yangguang St., Neihu Dist., Taipei City, Taiwan (R.O.C.).

XII. Product model number

List of corresponding models (Table 1)

Part name	BLE Wi-Fi	Power supply	Temperature/ humidity	Carbon dioxide	Particulate matter	Illumi-nation	TVOC	Formal-dehyde	Carbon monoxide	Ozone
UNO-S00FC01X001-A		●	●	●	●	●				
UNO-S00FC07X011-A	●	●	●	●	●	●				
UNO-S07FC07X011-A	●	●	●	●	●	●	●	●	●	
UNO-S02FC07X011-A	●	●	●	●	●	●		●		
UNO-S03FC07X011-A	●	●	●	●	●	●	●	●		

The above are standard products. If you need a special combination, please contact Delta dealers.

Federal Communication Commission Interference Statement

FCC ID: H79-UNOC07X011
Contains FCC ID: SH6MDBT50Q

Caution:

Any Changes or modifications not expressly approved by the party responsible for compliance could void the user's authority to operate the equipment.
This device complies with part 15 of the FCC Rules. Operation is subject to the following two conditions: (1)This device may not cause harmful interference, and (2) this device must accept any interference re-ceived, including interference that may cause undesired operation.
Note: This equipment has been tested and found to comply with the limits for a Class B digital device, pur-suant to part 15 of the FCC Rules. These limits are designed to provide reasonable protection against harmful interference in a residential installation. This equipment generates, uses and can radiate radio frequency energy and, if not installed and used in accordance with the instructions, may cause harmful interference to radio communications. However, there is no guarantee that interference will not occur in a particular installation. If this equipment does cause harmful interference to radio or television reception, which can be determined by turning the equipment off and on, the user is encouraged to try to correct the interference by one or more of the following measures:
—Reorient or relocate the receiving antenna.
—Increase the separation between the equipment and receiver.
—Connect the equipment into an outlet on a circuit different from that to which the receiver is connected.
—Consult the dealer or an experienced radio/TV technician for help.
This equipment complies with FCC radiation exposure limits set forth for an uncontrolled environment. This equipment should be installed and operated with a minimum distance of 20 cm between the radiator and a human body.

Canada: Industry Canada (IC) Statement.

IC: 26414-UNOC07X011

Warning:

This device complies with Industry Canada licence-exempt RSS standard(s). Operation is subject to the following two conditions:
(1) this device may not cause interference, and
(2) this device must accept any interference, including interference that may cause undesired operation of the device.

This equipment complies with ISED radiation exposure limits set forth for an uncontrolled environment. Thi s equipment should be installed and operated with a minimum distance of 20 cm between the radiator and a human body.
Le présent appareil est conforme aux CNR d'Industrie Canada applicables aux appareils radio exempts de licence. L'exploitation est autorisée aux deux conditions suivantes :
(1) l'appareil nedoit pas produire de brouillage, et
(2) l'utilisateur de l'appareil doit accepter tout brouillage radioélectrique subi, même si le brouillage est susceptible d'en compromettre le fonctionnement.

Cet équipement est conforme aux limites d'exposition aux rayonnements d'ISDE établies pour un environn ement non contrôlé. Cet équipement doit être installé et utilisé à une distance minimale de 20 cm entre le r adiateur et un corps humain.

XIV. Product dimensions

I. Device dimensions

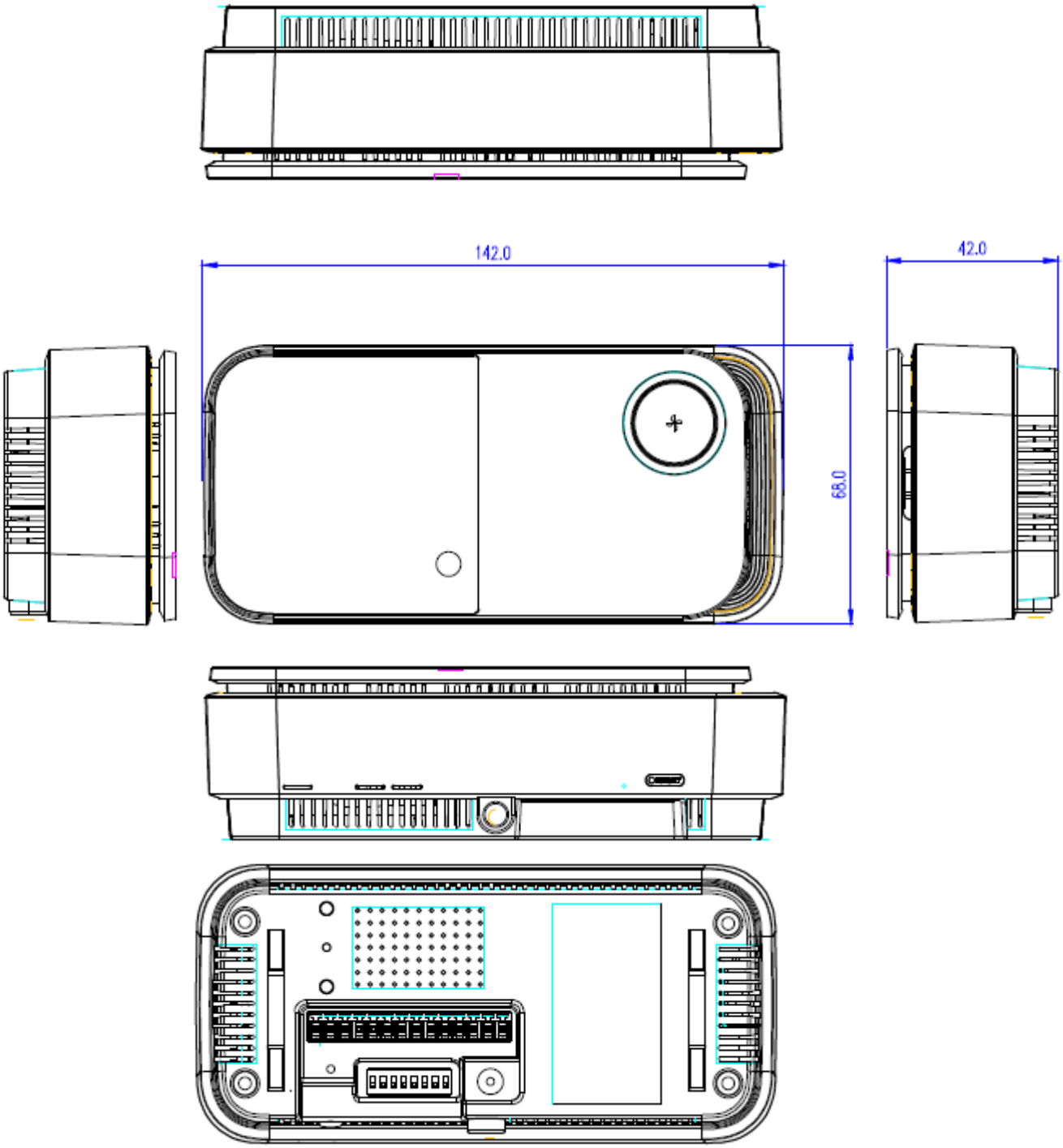
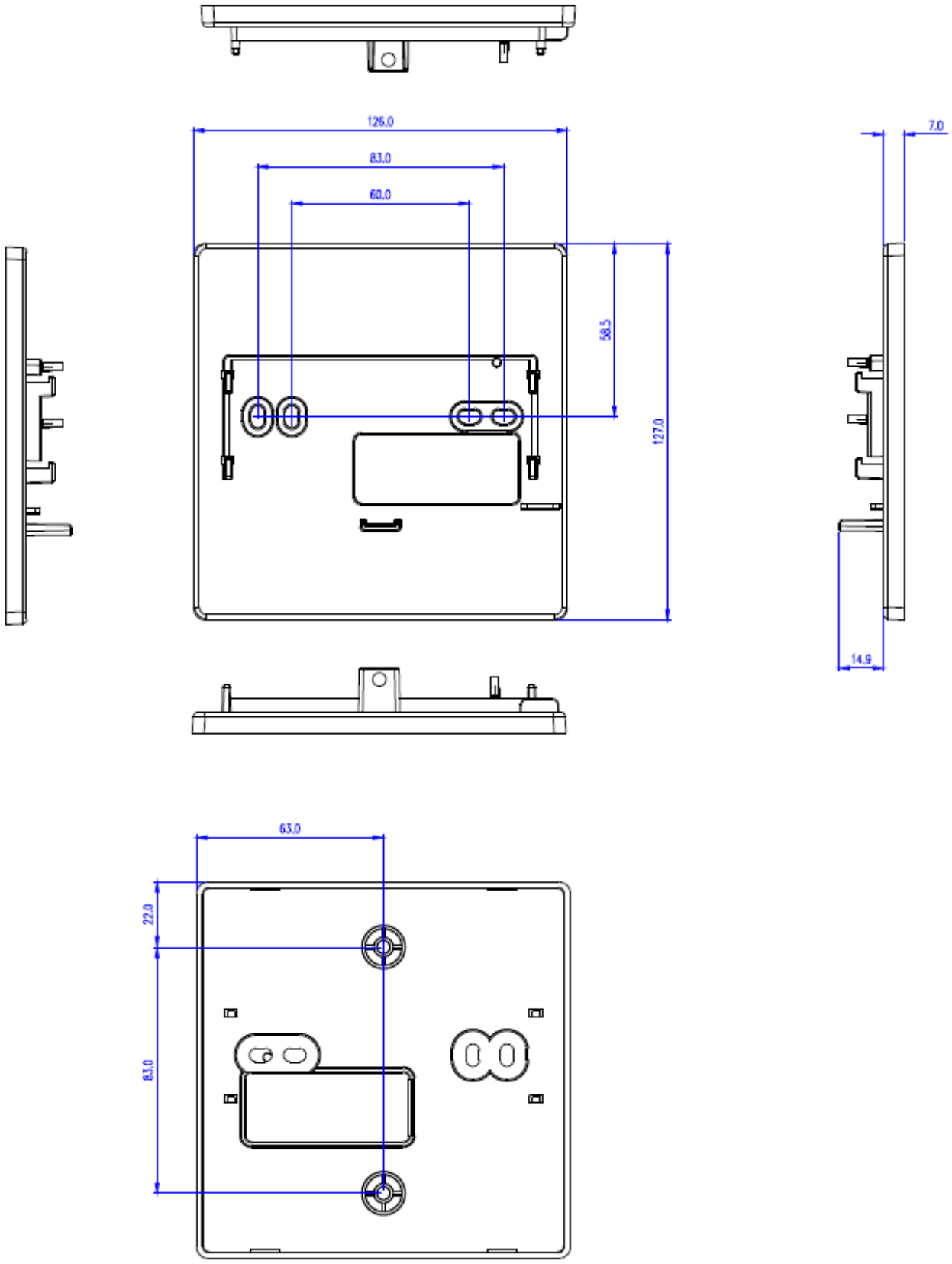
II. Wall mount dimensions