RF Exposure Antenna Summary

Network Systems Organization

FCC ID: **H9PLA2400** WLAN PC Card, 1 Mbps, CR-1, Hi Power

Class II Permissive Change

Output Power: 500 mW

Duty Cycle Factor: -9.0 dB

Mobile Antennas

Ant No	Model	Symbol P/N	Type	Gain (dBi)	Cabel Loss (dB)	Pout (dBm)	MPE (cm)	TR Status	Device Type

Portable Antennas

Ant No	Model	Symbol P/N	Type	Gain (dBi)	Cabel Loss (dB)	Pout (dBm)	EIRP (mW)	TR Status	Device Type
01.	7546 Trilogy	10-38649-02	F-Element	0.0	0.31	26.68	58.6	Tested	Hand Held
02.	2740 BFA	703624-1	F-Element	0.0	0.07	26.92	61.9	Tested	Hand Held
03.	Vocollect MMCX		Printed	0.0	0.25	26.74	59.5	Tested	Body Worn
04.	7200 Trilogy	10-35477-01	F-Element	0.0	0.13	26.86	61.1	Tested	Hand Held
05.	Toko	50-21900-022	Puck	0.0	0.00	26.99	62.9	Tested	Hand Held
06.	Oniel S24-1	50-21900-023	Slot	0.0	0.39	26.60	57.6	Withdrawn	Body Worn
07.	1740 BFA	703549-1	F-Element	0.0	0.07	26.92	61.9	See # 2	Hand Held
08.	Amity XPn	703611	Slot	0.0	0.58	26.41	55.1	Withdrawn	Hand Held

Antenna Gain listed without cable

7546 Antenna

The 7546 antenna is 0 dBi omni-directional in azimuth plane. It is mounted internally on the top end of the terminal as shown in the attached photo. In its use it would be within 20 cm of a persons hand but more than 20 cm from the users body. It is used in portable devices. The following RF exposure information is included in a prominent place in the device's user manual to inform the user of safety issues as required by OET Bulletin 65, Supplement C.

Location	Hand Held Device
Pattern	Omni
Type	F-Element
Gain	0 dBi
Physical	See attached dwg
Cable	MXYH75
Symbol P/N	10-38649-02

"Important Note: To comply with FCC RF exposure requirements, this hand-held device is approved for operation in a user's hand when there is 20 cm or more between the antenna and the user's body."

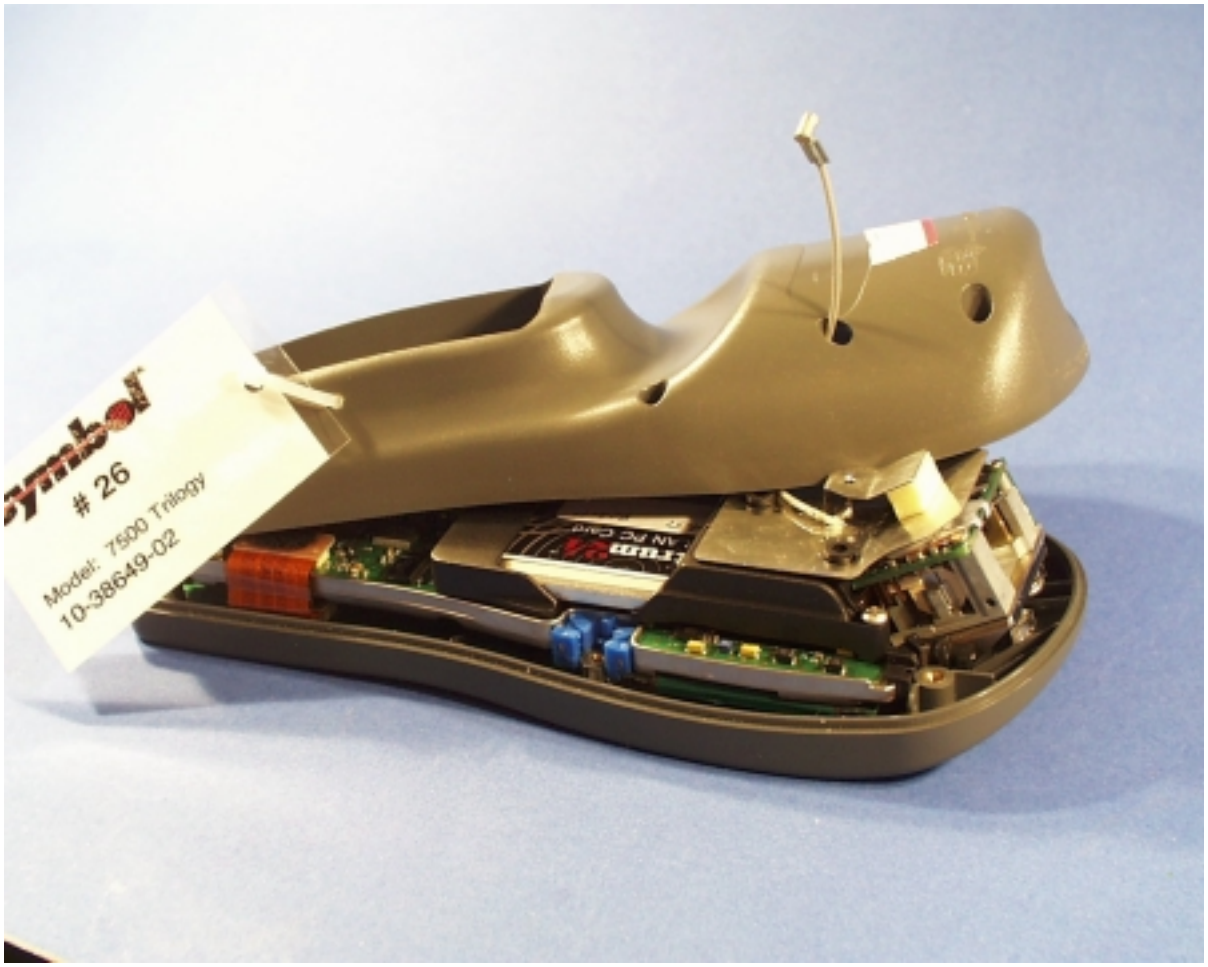

Antenna Installed in Device

Terminal Use Photo

REVISIONS							
REV.	ZONE	No.	DESCRIPTION	E.C.	BY	APVD.	DATE
A			RELEASED PER EDR #53455		MB		01/10/00

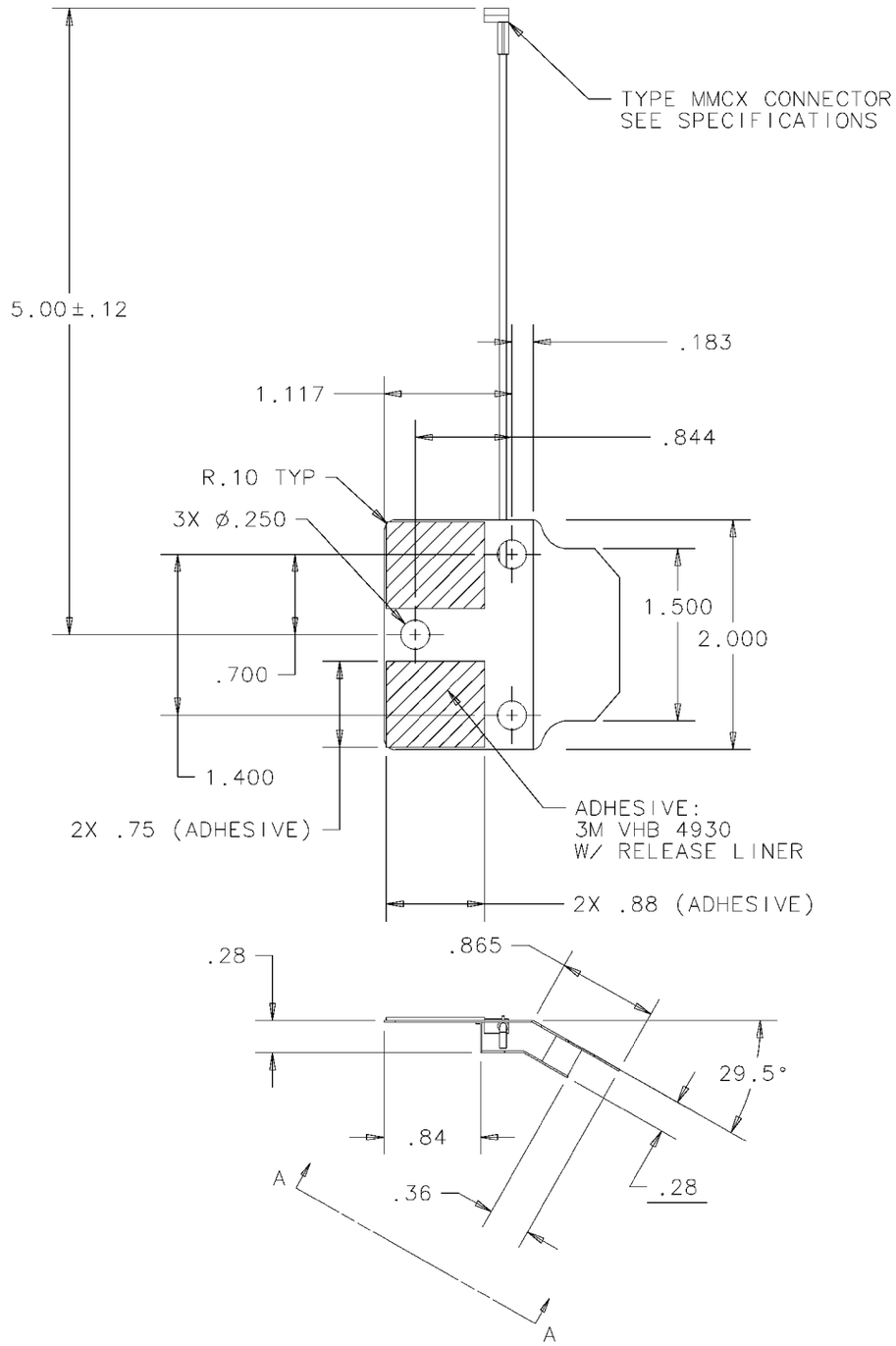

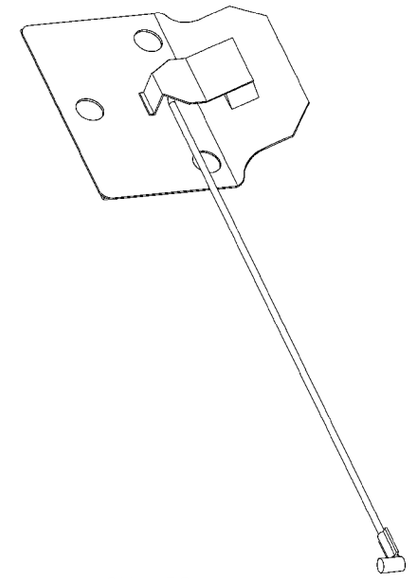

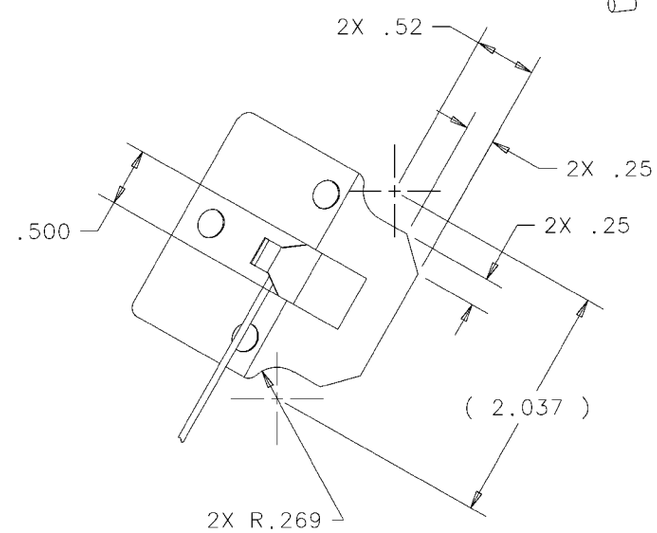

VIEW: A-A

SPECIFICATIONS

FREQUENCY:	2.4-2.485 GHZ
VSWR:	2.0:1 MAX
GAIN:	0dBi NOMINAL
POLARIZATION:	LINEAR
CABLE:	RG178
CONNECTOR:	TYPE MMCX,50-22100-029

NOTES: UNLESS OTHERWISE SPECIFIED

1. MATERIAL: CRS 1008, .015 ±.001THK
2. FINISH: BRIGHT TIN PLATE PER MIL-T-10727A, TYPE1, ELECTRO DEPOSITED .00010-.00025 INCHES. FINISH SHALL BE UNIFORM AND EXHIBIT NO EVIDENCE OF CORROSION OR OXIDATION WHEN VIEWED WITH THE UNAIDED EYE, EDGE PLATING ON CUT OR SHEARED SURFACES IS NOT REQUIRED.
3. TOLERANCES: .XX ±.03
   .XXX ±.010
   ANGLES ± 1°
4. PACKAGE IAW SYMBOL PACKAGING SPECIFICATION 40-04100-013
5. BREAK AND DEBUR ALL SHARP EDGES .005 MAX PRIOR TO PLATING

ITEM	QTY.	PART NO.	DESCRIPTION	REMARKS/REF. SYMBOL

NEXT ASSY	USED ON
	PDT 754X

THE DWG. & SPECIFICATION CONTAINED HEREON ARE PROPRIETARY AND MUST NOT BE USED, COPIED, REPRODUCED NOR ITS CONTENTS COMMUNICATED TO OTHERS EXCEPT IN ACCORDANCE WITH WRITTEN INSTRUCTIONS RECEIVED FROM SYMBOL TECHNOLOGIES INC.

DO NOT SCALE DRAWING

DIMENSIONS ARE IN INCHES
UNLESS OTHERWISE SPECIFIED

	MM	INCH
.XX	+/-	+/- .01
.XXX	+/-	+/- .005

ANGLES ± 1° FRACTIONS ± 1/64

MATERIAL:

FINISH:

APPROVALS		DATE
DRAWN	M.BUNYON	01/10/00
CHECKED	M.SAVONA	01/10/00
ENGINEER	C.THELEMANN	01/10/00
MFG. ENG.		
PRODUCT		
QUALITY		
ANALYST	L.DOBKOWSKI	01/10/00

SYMBOL TECHNOLOGIES INC.
Bohemia, New York

ANTENNA:2.4 GHz TYPE F

SIZE	DWG. NO.	REV.
C	10-38649-02	A

SCALE: 1:1 | SOLID MODEL YES NO ☒ | SHEET 1 OF 1

2740 Antenna

The 2740 antenna is 0 dBi omni-directional in azimuth plane. It is mounted internally on the top end of the terminal as shown in the attached photo. In its use it would be within 20 cm of a persons hand but more than 20 cm from the users body. It is used in portable devices. The following RF exposure information is included in a prominent place in the device's user manual to inform the user of safety issues as required by OET Bulletin 65, Supplement C.

Location	Hand Held Device
Pattern	Omni
Type	F-Element
Gain	0 dBi
Physical	See attached dwg
Cable	MXYH75
Symbol P/N	703624-1

"Important Note: To comply with FCC RF exposure requirements, this hand-held device is approved for operation in a user's hand when there is 20 cm or more between the antenna and the user's body."

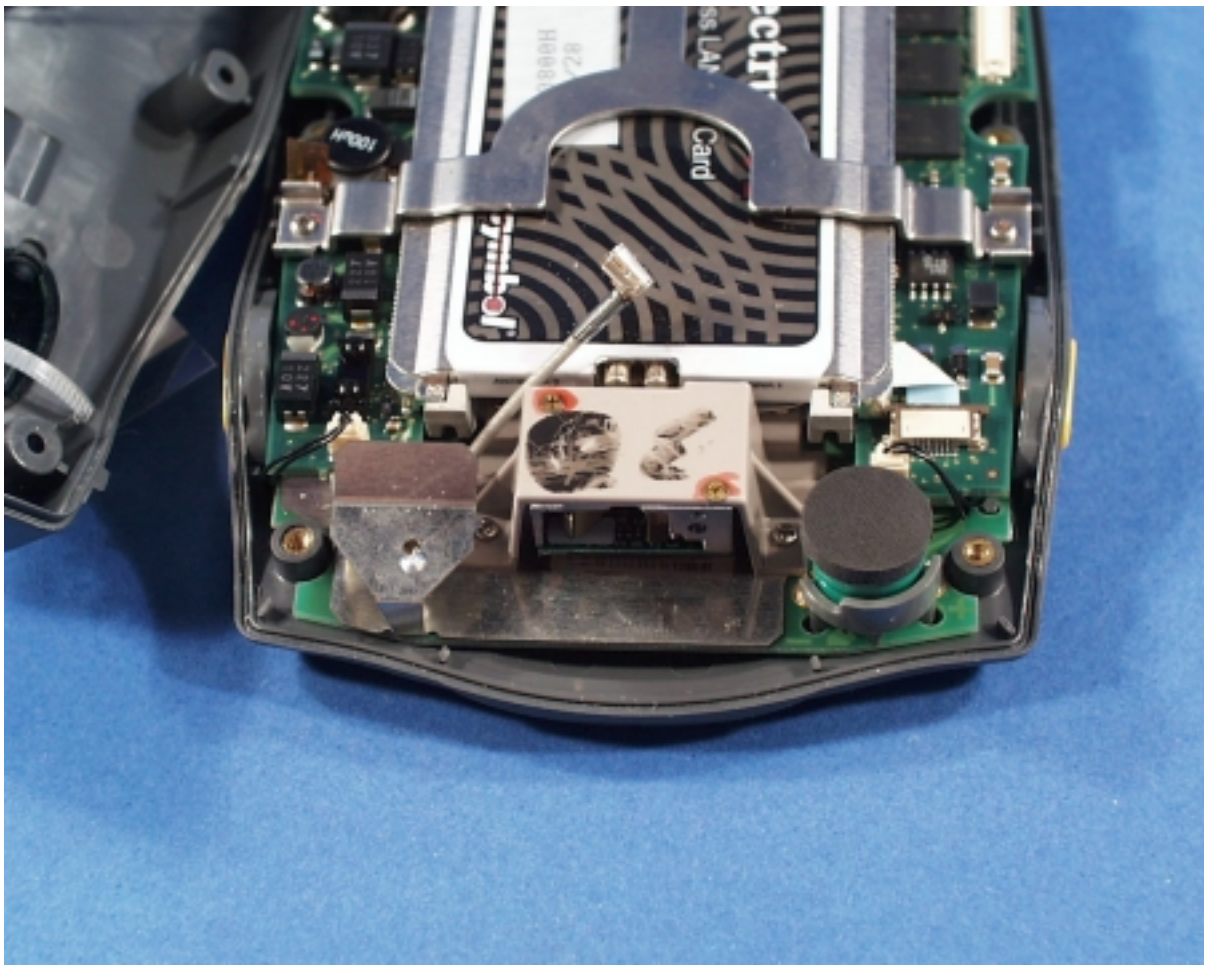

Antenna Installed in Device

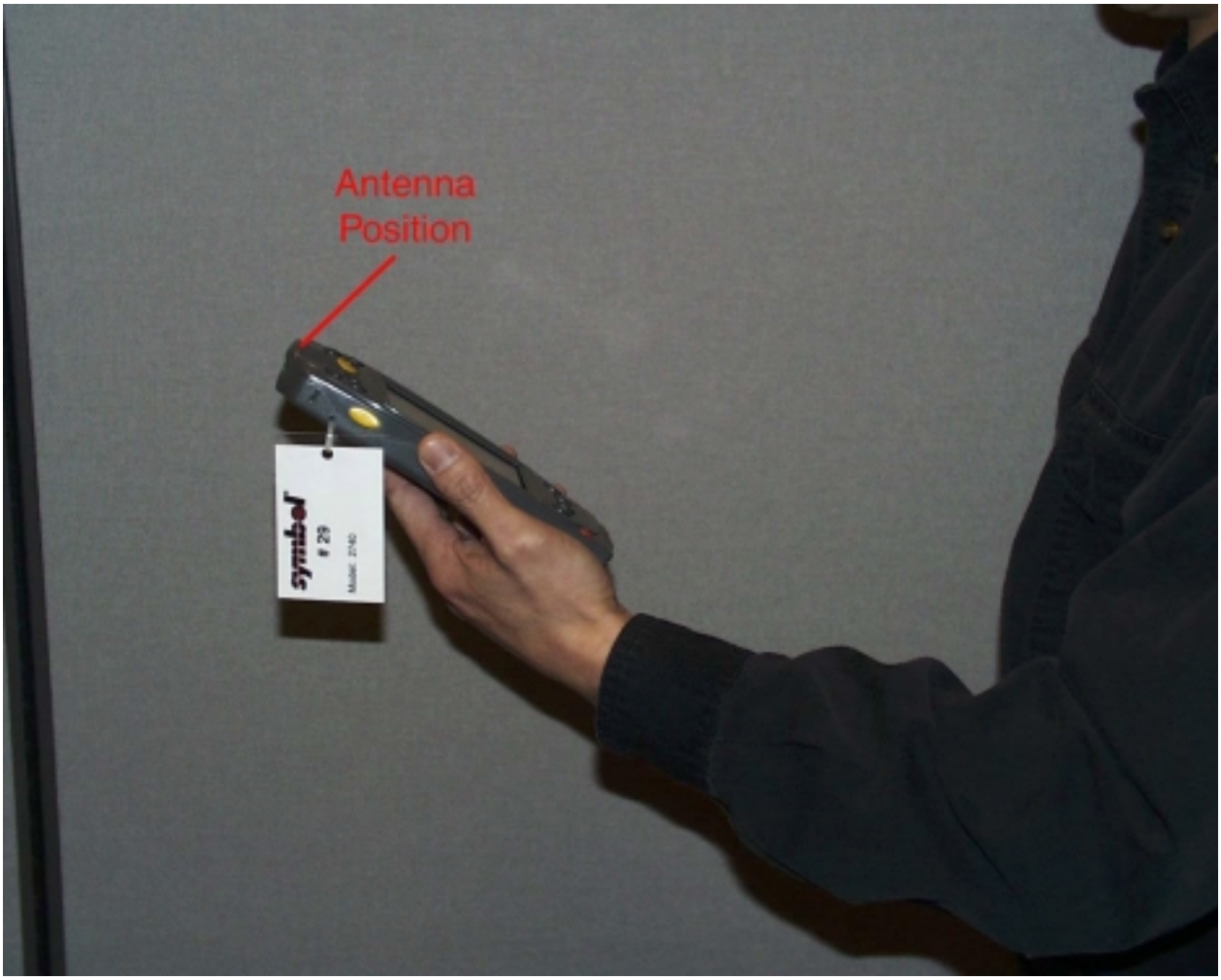

Terminal Use Photo

TECOM PROPRIETARY:
INFORMATION CONTAINED HEREIN SHALL NOT BE DISCLOSED TO A THIRD PARTY WITHOUT WRITTEN PERMISSION FROM TECOM.

REVISIONS

ZONE	LTR	DESCRIPTION	DATE	APPROVED

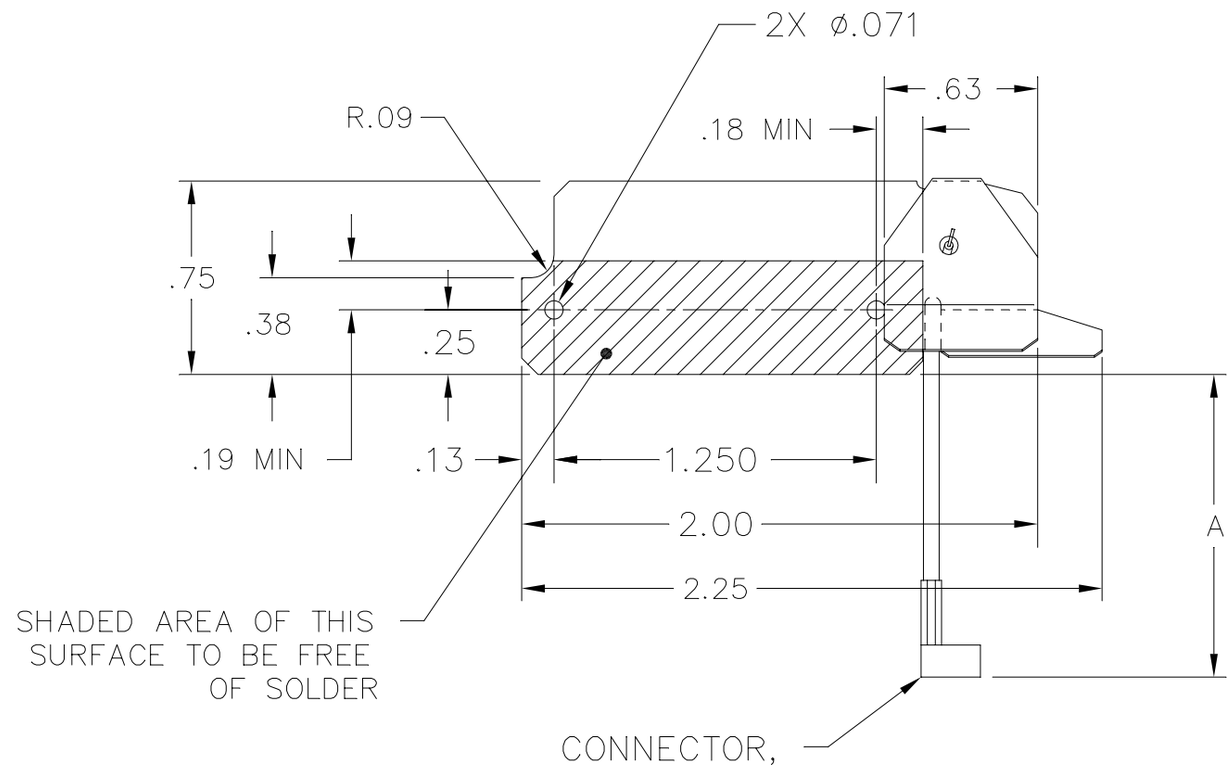

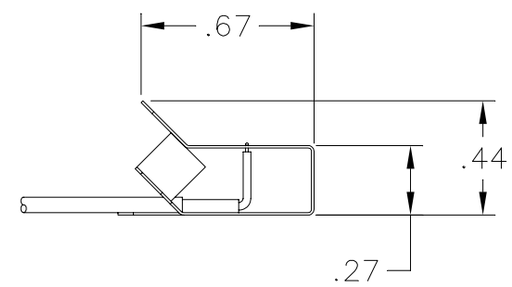

SPECIFICATIONS

FREQUENCY: _____ 2.4-2.485 GHZ
VSWR: _____ 2.0:1 MAX
GAIN: _____ 0dBi NOMINAL
POLARIZATION: _____ LINEAR

DASH NO	CONNECTOR	A	REV
-2	MMCX MALE RT ANGLE	1.85±.12	-
-1	MURATA TYPE BFA	1.16±.12	-

4. SHARP CORNERS & EDGES .005 MAX.

3. FINISH SHALL BE UNIFORM AND EXHIBIT NO EVIDENCE OF CORROSION OR OXIDATION WHEN VIEWED WITH THE UNAIDED EYE. EDGE PLATING ON CUT OR SHEARED SURFACES IS NOT REQUIRED.

2. ALTERNATE:
MATERIAL: CRS 1008, .010 THK.
FINISH: BRIGHT TIN PLATE PER MIL-T-10727A, TYPE 1, ELECTRO DEPOSITED .00010-.00025 IN.

1. MATERIAL: ELECTROLYTIC TIN PLATED STEEL SHEET, .010 THK.

.500
SCALE

NOTES : UNLESS OTHERWISE SPECIFIED

PMIC	
	(PICO II)
823335	CP90-924
NEXT ASSY	USED ON
APPLICATION	

UNLESS OTHERWISE SPECIFIED:
DIMENSIONS ARE IN INCHES.
TOLERANCES: .XX ± .03
.XXX ± .010 ANGLES ± 0°30'
MACHINED SURFACE ROUGHNESS 125✓
REMOVE BURRS, SHARP EDGES R.005–.015
MACHINED FILLETS R.005–.015
DIMENSIONS ARE AFTER PLATING.
MACHINED DIA'S ON COMMON CENTERLINE CONCENTRIC WITHIN .005 TIR.
INTERPRET PER ANSI Y14.5M–1982.

HOLE TOLERANCES:

.040 – .128	+.003 −.001	.515 – .750	+.008 −.001
.136 – .228	+.004 −.001	.765 – 1.000	+.010 −.002
.234 – .500	+.006 −.001	1.031 UP	+.015 −.002

MATL ENGR | APPROVAL

CONTRACT NUMBER

CONTRACTOR

DRAWN BY J. LOWE	DATE 12/1/99
CHECKER	MFG ENGR
QA	ENGR
PRGM MGR	ENGR

TECOM INDUSTRIES INC.
9324 TOPANGA CYN BLVD CHATSWORTH, CA. 91311
TECHNICAL EXCELLENCE COMMITTED TO QUALITY

TITLE
ANTENNA, 2.4 GHZ

SIZE	CAGE CODE	DWG NO
C	52791	703624

SCALE 2/1 | UNIT WT . | SHEET 1 OF 1

(703595)

Talkman Open – 2.4 GHz Symbol Radio Information

Vocollect Antenna Specifications

Type:	Dipole
Gain:	2 dBi
Polarization:	Circular
Physical description:	Implemented on flat and rigid printed circuit board, internally mounted, parallel to the belt mounting loop.
Min distance from skin:	2.1 inches (1.70 inches to inside to belt loop plus 0.40 inches of padded belt)

Table 1: Bill of Materials- Talkman Open – Symbol Radio and Antenna

Item	Qty	Vocollect Part #	Vendor Part #	Supplier	Description
1	1	656022		Austin Antenna	ANTENNA PCB
2	1	606012	90174601	Huber-Suhner	CABLE ASSY, ANTENNA

Vocollect, Inc. • 701 Rodi Road • Pittsburgh, PA • 15235 • 412-829-8145 • 412-829-0972

Image 1: 2.4 GHz Antenna PC Board

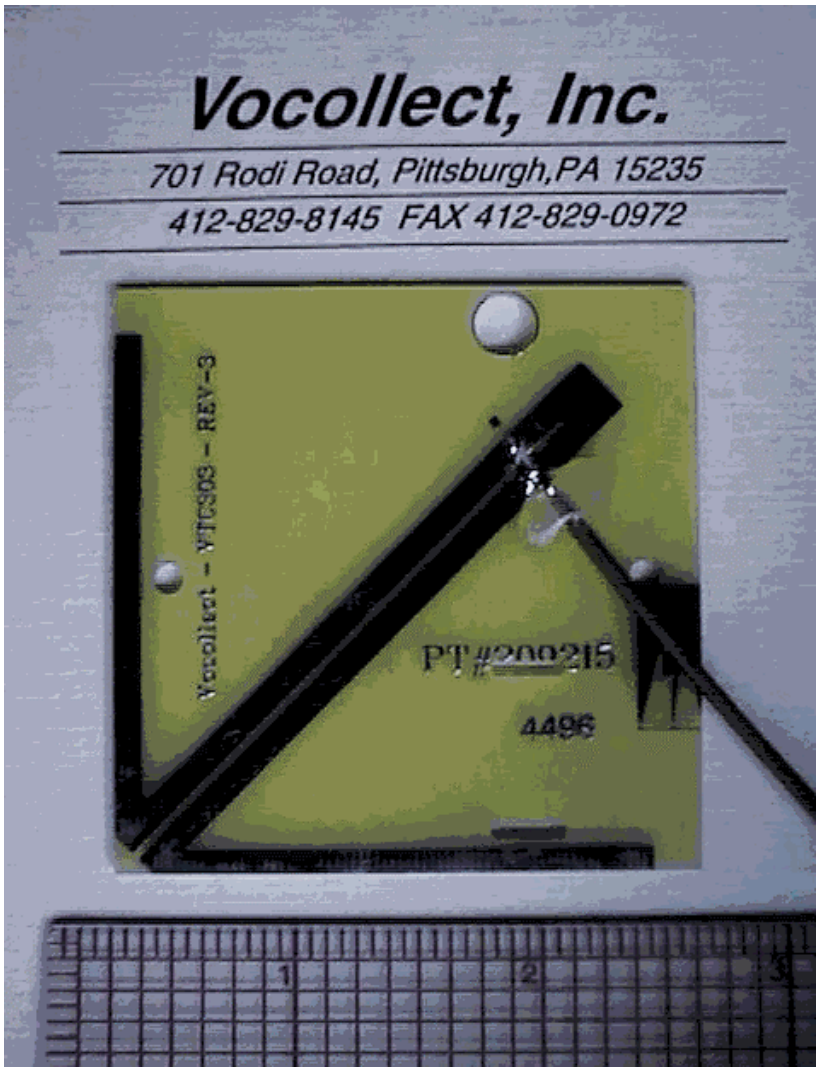

IMAGE 2: Beltworn Terminal - Drawing

IMAGE 3: Beltworn Terminal

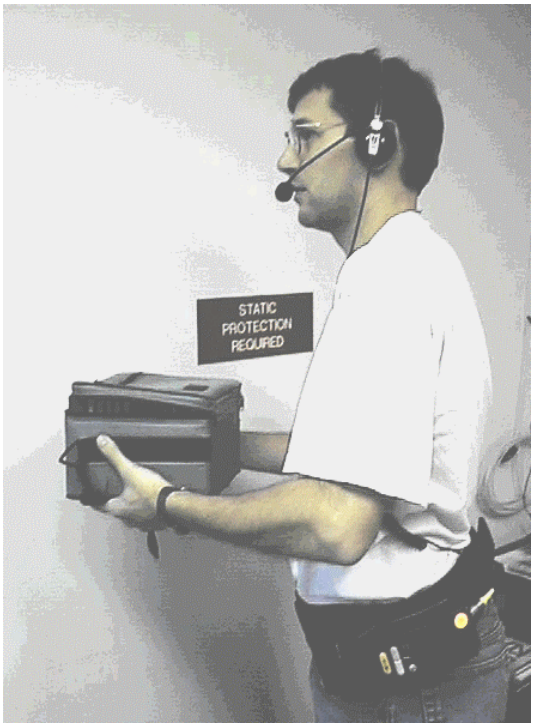

IMAGE 4: Drawing of Antenna Placement Inside Unit.

The antenna is mounted in the plane parallel to the belt loop and waist, 1.70 inches away from the belt loop used to connect the terminal to the padded mounting belt. Including the belt thickness, the radio is at least 2.1 inches distant from the skin.

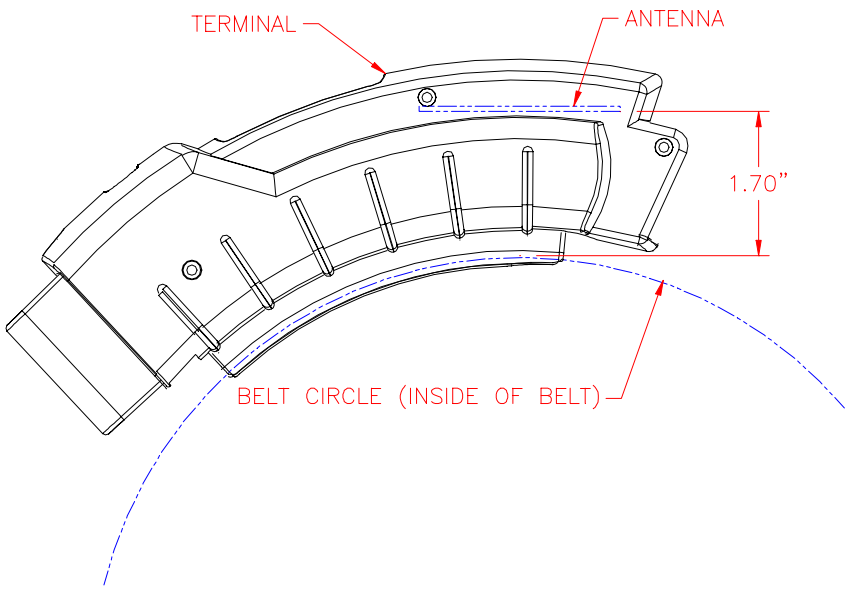

IMAGE 5: The unit mounts on a padded belt ½" thick.

The unit is connected to the belt be a secondary strap secured to the belt. The full width of the main padded belt remains between the terminal and user's body.

7240 Antenna

The 7240 antenna is 0 dBi omni-directional in azimuth plane. It is mounted internally on the top end of the terminal as shown in the attached photo. In its use it would be within 20 cm of a persons hand but more than 20 cm from the users body. It is used in portable devices. The following RF exposure information is included in a prominent place in the device's user manual to inform the user of safety issues as required by OET Bulletin 65, Supplement C.

Location	Hand Held Device
Pattern	Omni
Type	F-Element
Gain	0 dBi
Physical	See attached dwg
Cable	MXYH75
Symbol P/N	10-35477-01

"Important Note: To comply with FCC RF exposure requirements, this hand-held device is approved for operation in a user's hand when there is 20 cm or more between the antenna and the user's body."

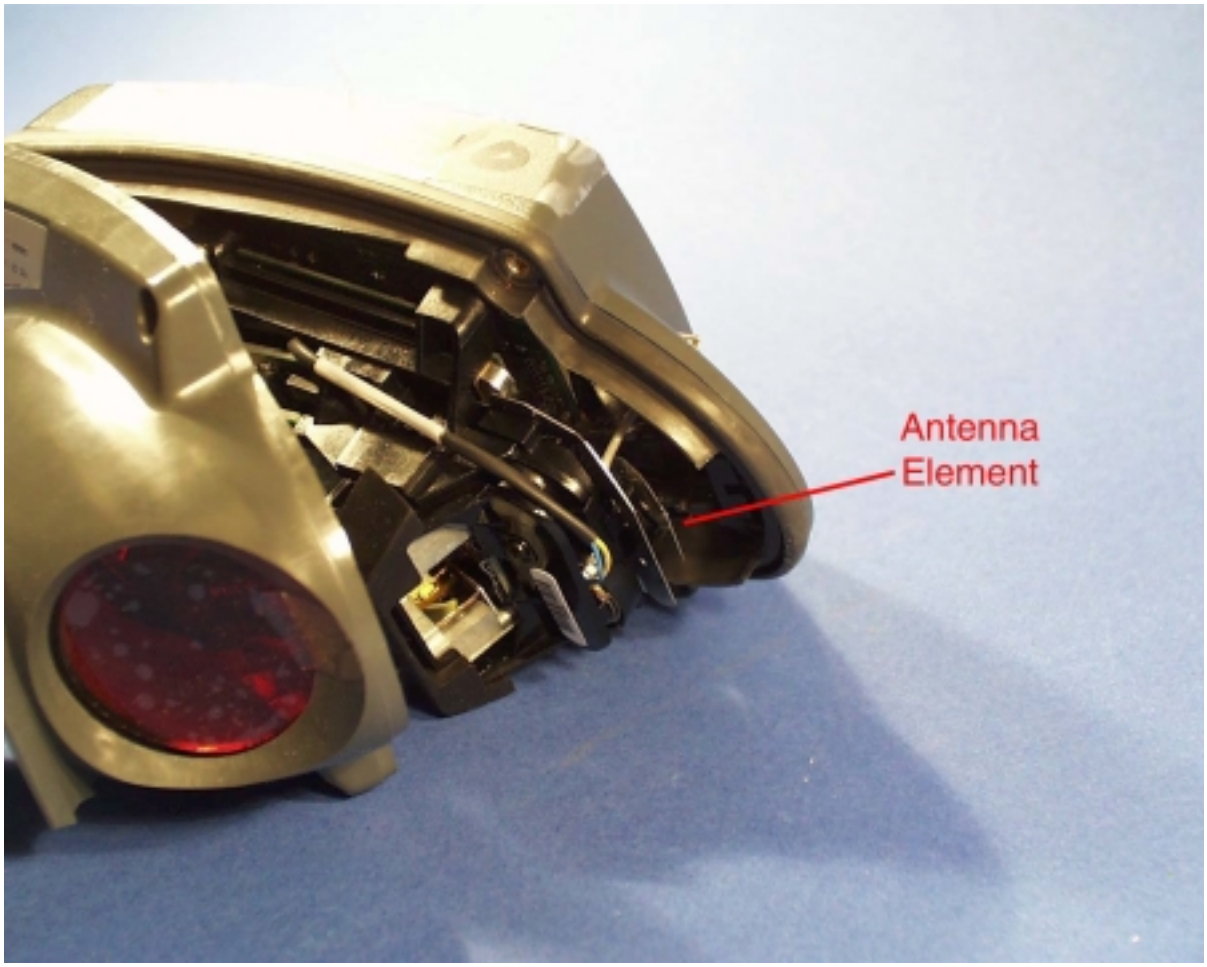

Antenna Installed in Device

Terminal Use Photo

REVISIONS							
REV	ZONE	NO.	DESCRIPTION	E.C.	BY	APVD.	DATE
1			INITIAL RELEASE PER PPD# 51859		JKW		11-03-99
2			REVISED PER PPD #52781 1) REVISED PER TECOM'S DWG		MB		12/8/99
3			REVISED PER PPD #53240 1) DIM .45 WAS .42 2) ADDED NOTE 5		MB		12/29/99

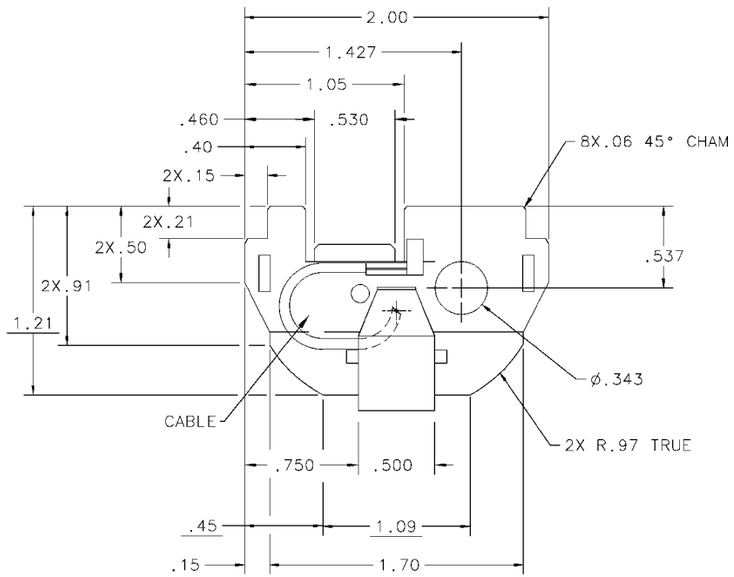

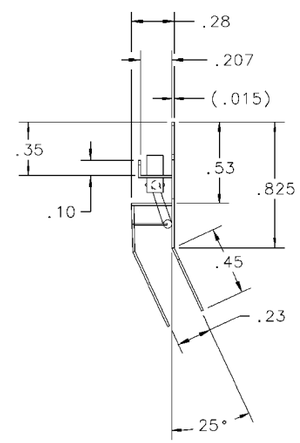

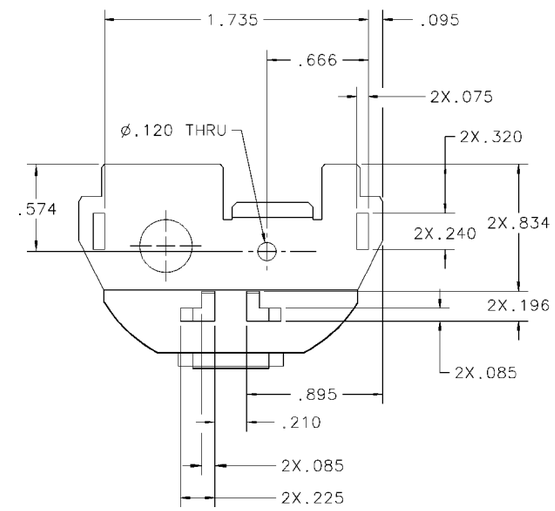

NOTES: UNLESS OTHERWISE SPECIFIED:

1. MATERIAL: CRS 1008, .015 THK, SHARP CORNERS AND EDGES .005 MAX.
   ALTERNATE: ELECTROLYTIC TIN.
2. FINISH: BRIGHT TIN PLATE PER MIL-T-10727A, TYPE 1, ELECTRO DEPOSITED .00010-.00025 IN. FINISH SHALL BE UNIFORM EXHIBIT NO EVIDENCE OF CORROSION OR OXIDATION WHEN VIEWED WITH THE UNAIDED EYE. EDGE PLATING ON CUT OR SHEARED SURFACES IS NOT REQUIRED.
3. PACKAGE ITEMS IN ACCORDANCE WITH STI GENERAL PACKAGING SPEC #50-04100-013.
4. WORKMANSHIP PER STI STANDARD SS-03800-57.
5. ALL UNDERLINED DIMENSIONS ARE OUT OF SCALE AND ARE NOT REFLECTED IN THE 3-D DATA BASE

SPECIFICATIONS

FREQUENCY:	2.4-2.485 GHz
VSWR:	2.0:1
GAIN:	0dbi NOMINAL
POLARIZATION:	LINEAR
CABLE:	RG178
CONNECTOR:	50-22100-029 (MMCX)

ITEM	QTY	PART NO.	DESCRIPTION	REMARKS/REF. SYMBOL

PARTS LIST

NEXT ASSY	USED ON
	PDT 7200

DO NOT SCALE DRAWING

THE DRAWING & SPECIFICATION CONTAINED HEREIN ARE PROPRIETARY AND MUST NOT BE USED, COPIED, REPRODUCED, OR OTHERWISE DEALT WITH NOR ITS CONTENTS COMMUNICATED TO OTHERS EXCEPT IN ACCORDANCE WITH WRITTEN INSTRUCTIONS RECIEVED FROM SYMBOL TECHNOLOGIES INC.

DIMENSIONS ARE IN UNLESS OTHERWISE SPECIFIED

	MM	INCH
.XX	+/-	+/- .03
.XXX	+/-	+/- .010

ANGLES +/- 0°30' FRACTIONS +/- 1/64

MATERIAL: SEE NOTE 1

FINISH: SEE NOTE 2

APPROVALS		DATE
DRAWN	JKW	11-03-99
CHECKED	M.SAVONA	11-03-99
ENGINEER	J.CONNELLY	11-03-99
MFG. ENG.		
PRODUCT		
QUALITY		
ANALYST	L.DOBKOWSKI	12-29-99

SYMBOL TECHNOLOGIES INC.
Bohemia, New York

ANTENNA: 2.4GHZ, 11/2MBPS, PDT7200

SIZE D | DWG. NO. 10-35477-01 | REV 3

SCALE: 2:1 | SOLID MODEL YES ☒ NO | SHEET 1 OF 1

Toko Antenna

The Toko antenna is 0 dBi omni-directional in azimuth plane. It is mounted as a through hole device directly on the printed circuit board of a hand held device. In its use it would be within 20 cm of a persons hand but more than 20 cm from the users body. It is used in portable devices. The following RF exposure information is included in a prominent place in the device's user manual to inform the user of safety issues as required by OET Bullitin 65, Supplement C.

Location	Hand Held Device
Pattern	Omni
Type	Dielectric Puck
Gain	0 dBi
Physical	2.5" x 2.5" x 0.75"
Cable	none
Symbol P/N	50-21900-022

"Important Note: To comply with FCC RF exposure requirements, this hand-held device is approved for operation in a user's hand when there is 20 cm or more between the antenna and the user's body."

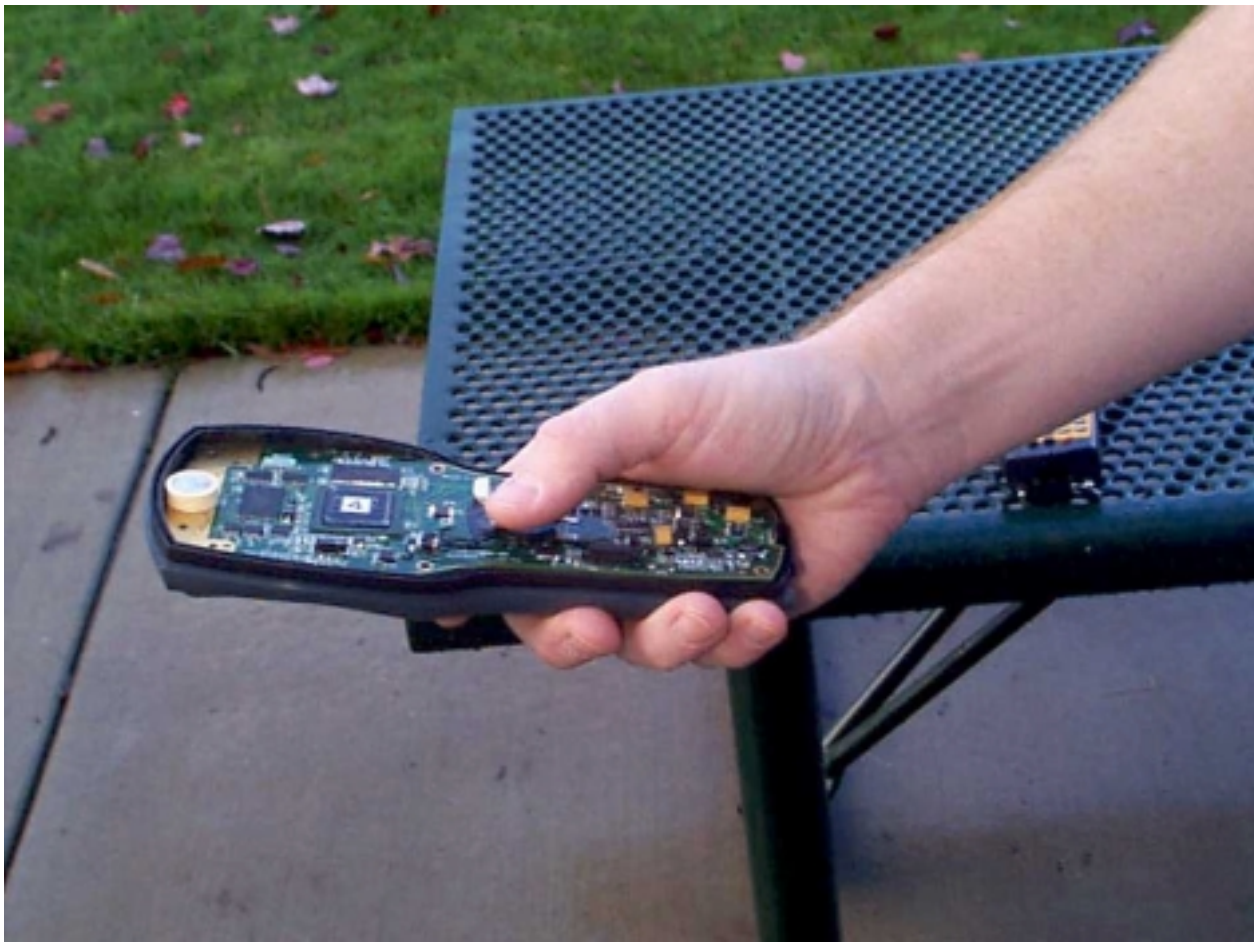

ANTENNA ELEMENT FOR 2.4 GHz

DESCRIPTION

The DAC Series is a miniature dielectric antenna element for 2.4 GHz wireless LAN systems. This antenna has vertical polarization characteristics. TOKO's proprietary ceramic dielectric material provides excellent stability and sensitivity. It is mountable in Type II extended PCMCIA cards.

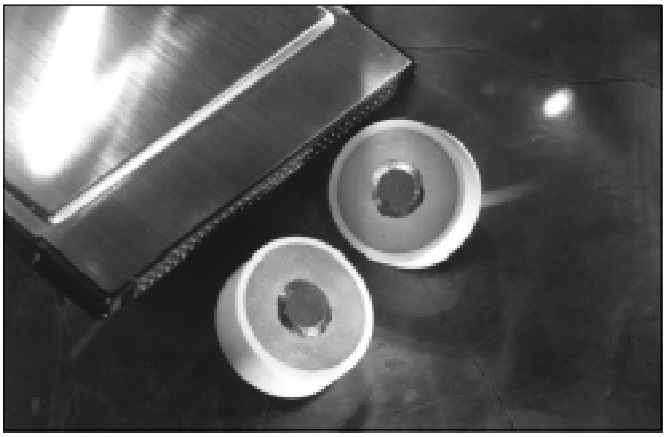

FEATURES

- Vertical Polarization reception
- Low profile (6.5mm max)
- Omni-directional in azimuth
- Low interference design
- Central feeding point terminal
- Wide bandwidth
- Light weight

SPECIFICATIONS

Part Number	DAC2450CT1
Center Frequency	2450 MHz
Receiving Bandwidth	±50 MHz min.
Impedance	50Ω
Peak Gain	2.15 dBi (0dBi typ.) max.
Operating Temperature	-10 ~ +60° C
Storage Temperature	-20 ~ +85° C
Weight	4g

DIMENSIONS

DAC SERIES

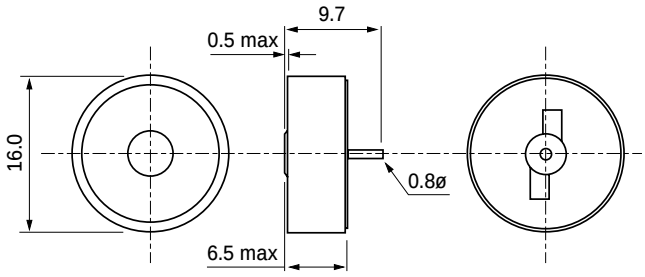

Unit: mm

Mounted with Ground Plane

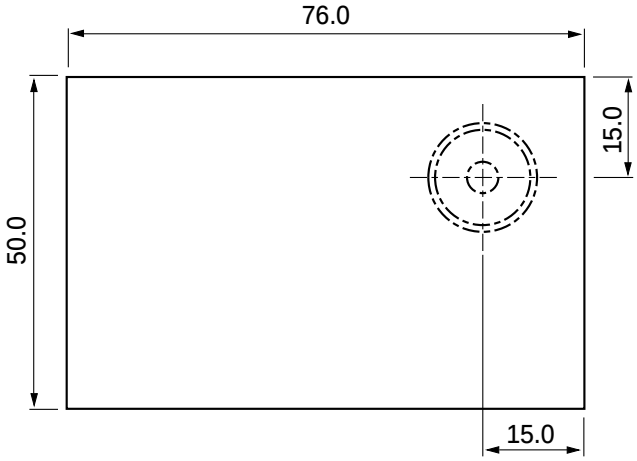

DAC Series

TYPICAL CHARACTERISTICS

Receiving Signal Response vs Frequency

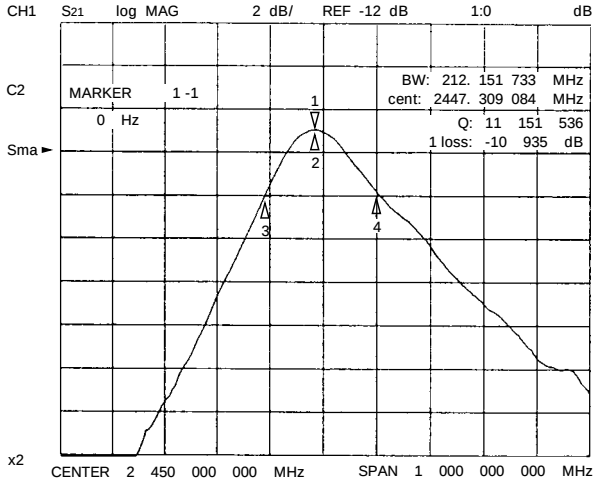

Return Loss

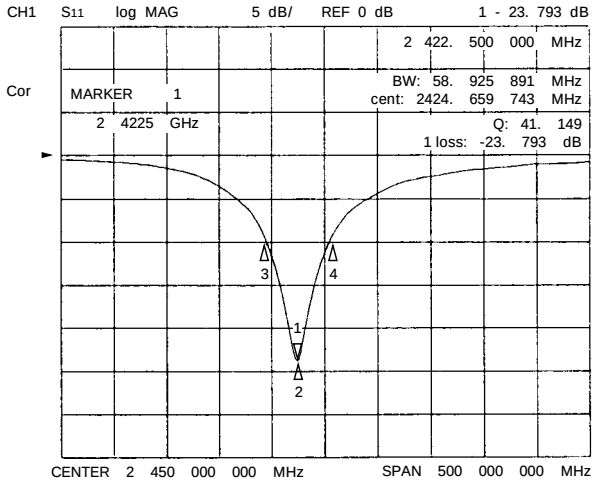

Smith Impedance

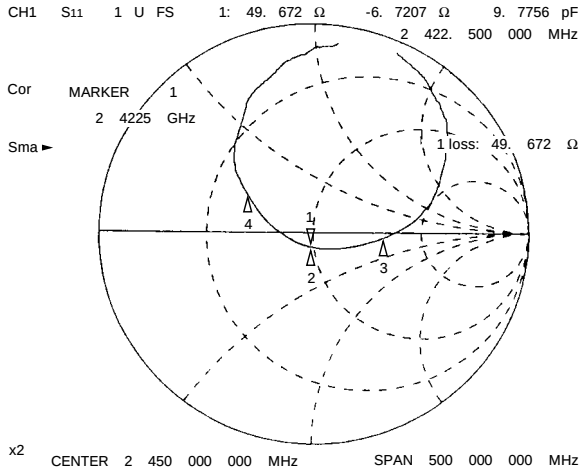

DIRECTIVITY CHART

Horizontal Pattern

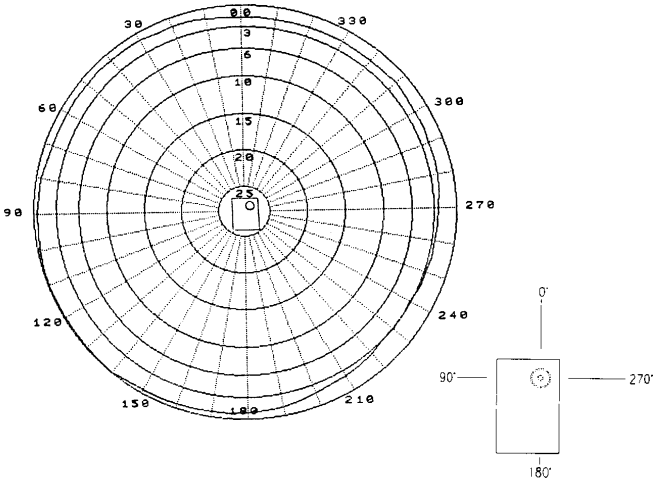

Vertical Pattern

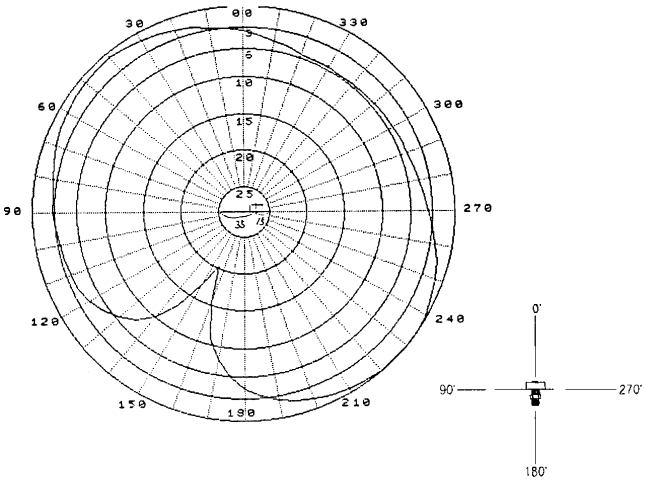

Vertical Pattern

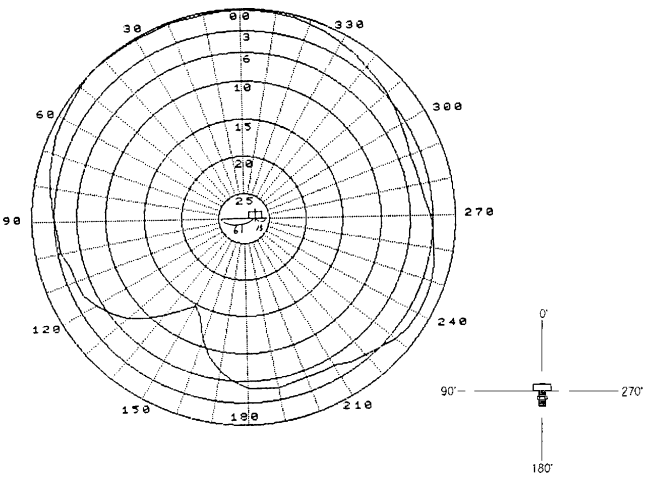

INTERFERENCE COMPARISON OF DAC VS. PLANAR INVERTED F ANTENNA

DAC Set-up

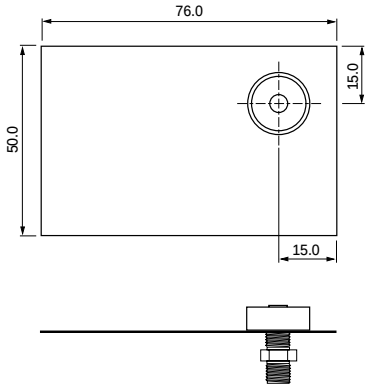

Planar F Inverted Set-up

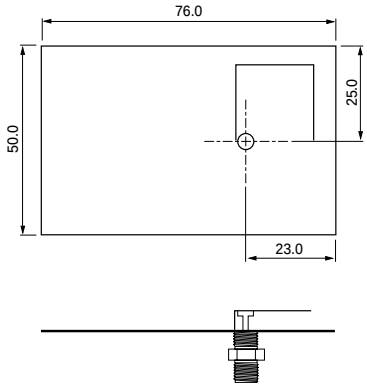

Fig.1

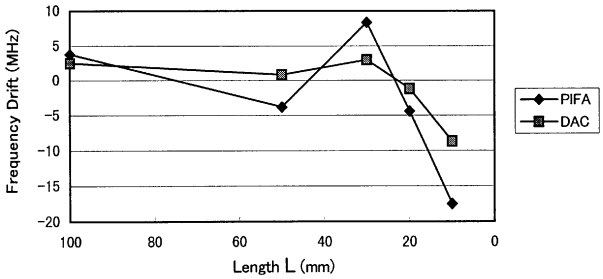

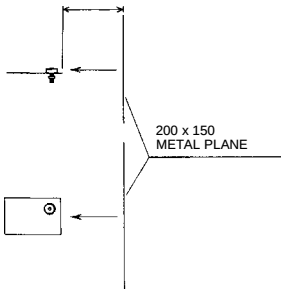

Fig.2

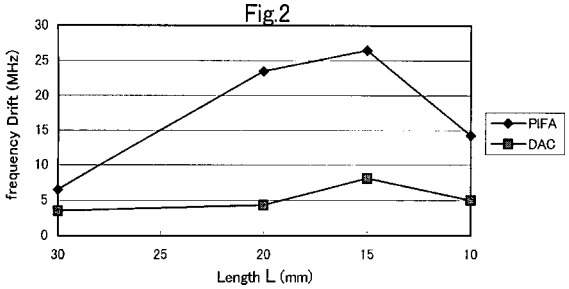

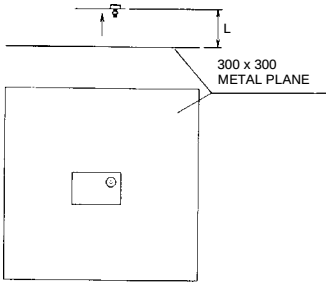

Fig.3

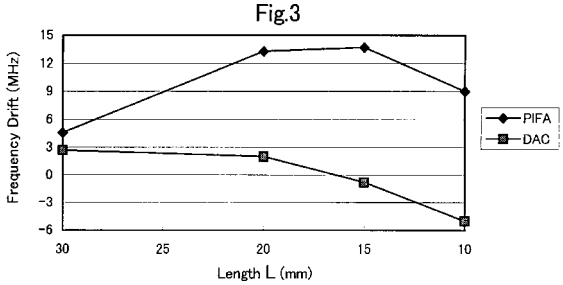

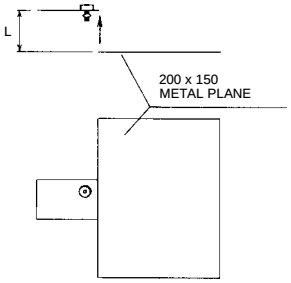

Fig.4

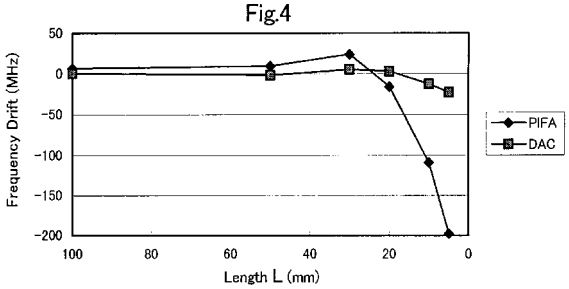

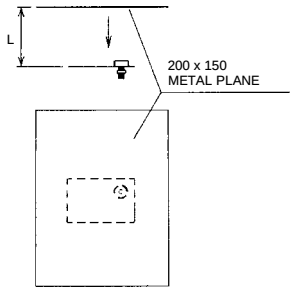

DAC Series

TYPICAL APPLICATION
MOUNTED IN PCMCIA TYPE II EXTENDED CARD

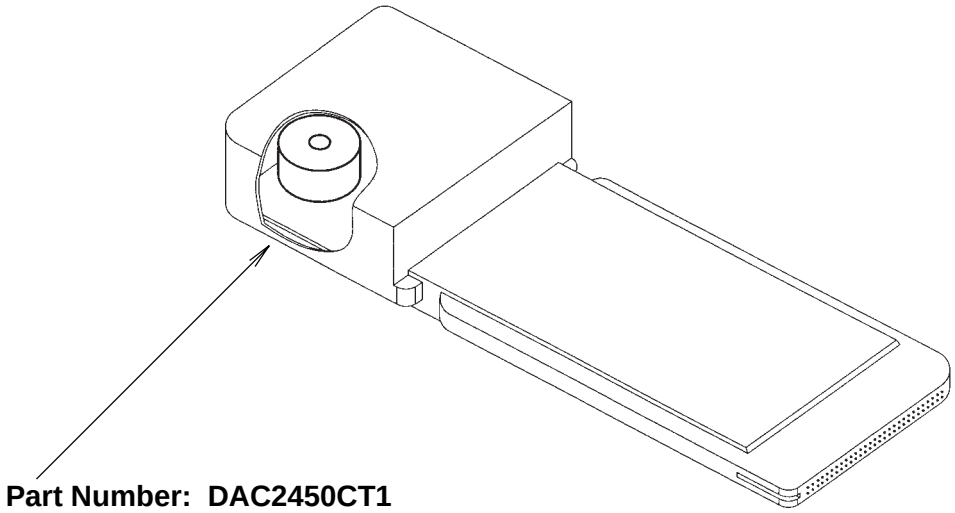

Part Number: DAC2450CT1

TYPICAL MOUNTING TO PRINTED CIRCUIT BOARD

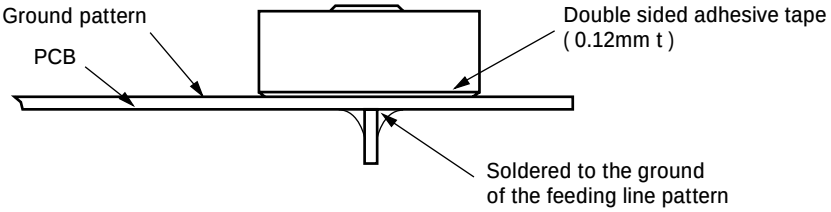

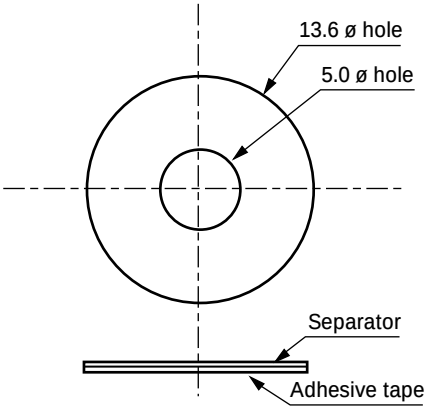

Notes:
- Fix the antenna element on PCB using double sided adhesive tape of 0.12mm thickness. (Recommend No. 5015 : NITTO DENKO CORP.)
- Solder the antenna terminal pin on the bottom side of PCB to the ground of the feeding line patten.
- The terminal pin should be separated from the ground pattern.

Unit: mm
Material: Nitto N5015

The information furnished by TOKO, Inc. is believed to be accurate and reliable. However, TOKO reserves the right to make changes or improvements in the design, specification or manufacture of its products without further notice. TOKO does not assume any liability arising from the application or use of any product or circuit described herein, nor for any infringements of patents or other rights of third parties which may result from the use of its products. No license is granted by implication or otherwise under any patent or patent rights of TOKO, Inc.

Toko America, Inc.
1250 Feehanville Drive, Mt. Prospect, IL 60056
Tel: (847) 297-0070 Fax: (847) 699-7864 Web: http://www.tokoam.com

TOKO SALES LOCATIONS

Midwest Regional Office
Toko America, Inc.
1250 Feehanville Drive
Mount Prospect, IL 60056
Tel: (847) 297-0070
Fax: (847) 699-7864

Western Regional Office
Toko America, Inc.
2480 North First Street , Suite 260
San Jose, CA 95131
Tel: (408) 432-8281
Fax: (408) 943-9790

Eastern Regional Office
Toko America, Inc.
107 Mill Plain Road
Danbury, CT 06811
Tel: (203)748-6871
Fax: (203)797-1223

© 1997 Toko, Inc.
All Rights Reserved

CF-162-DACDS297
0397O2.0K

Printed in the USA

1740 Antenna

The 1740 antenna is 0 dBi omni-directional in azimuth plane. It is mounted internally on the top end of the terminal as shown in the attached photo. In its use it would be within 20 cm of a persons hand but more than 20 cm from the users body. It is used in portable devices. The following RF exposure information is included in a prominent place in the device's user manual to inform the user of safety issues as required by OET Bulletin 65, Supplement C.

Location	Hand Held Device
Pattern	Omni
Type	F-Element
Gain	0 dBi
Physical	See attached dwg
Cable	MXYH75
Symbol P/N	703549-1

"Important Note: To comply with FCC RF exposure requirements, this hand-held device is approved for operation in a user's hand when there is 20 cm or more between the antenna and the user's body."

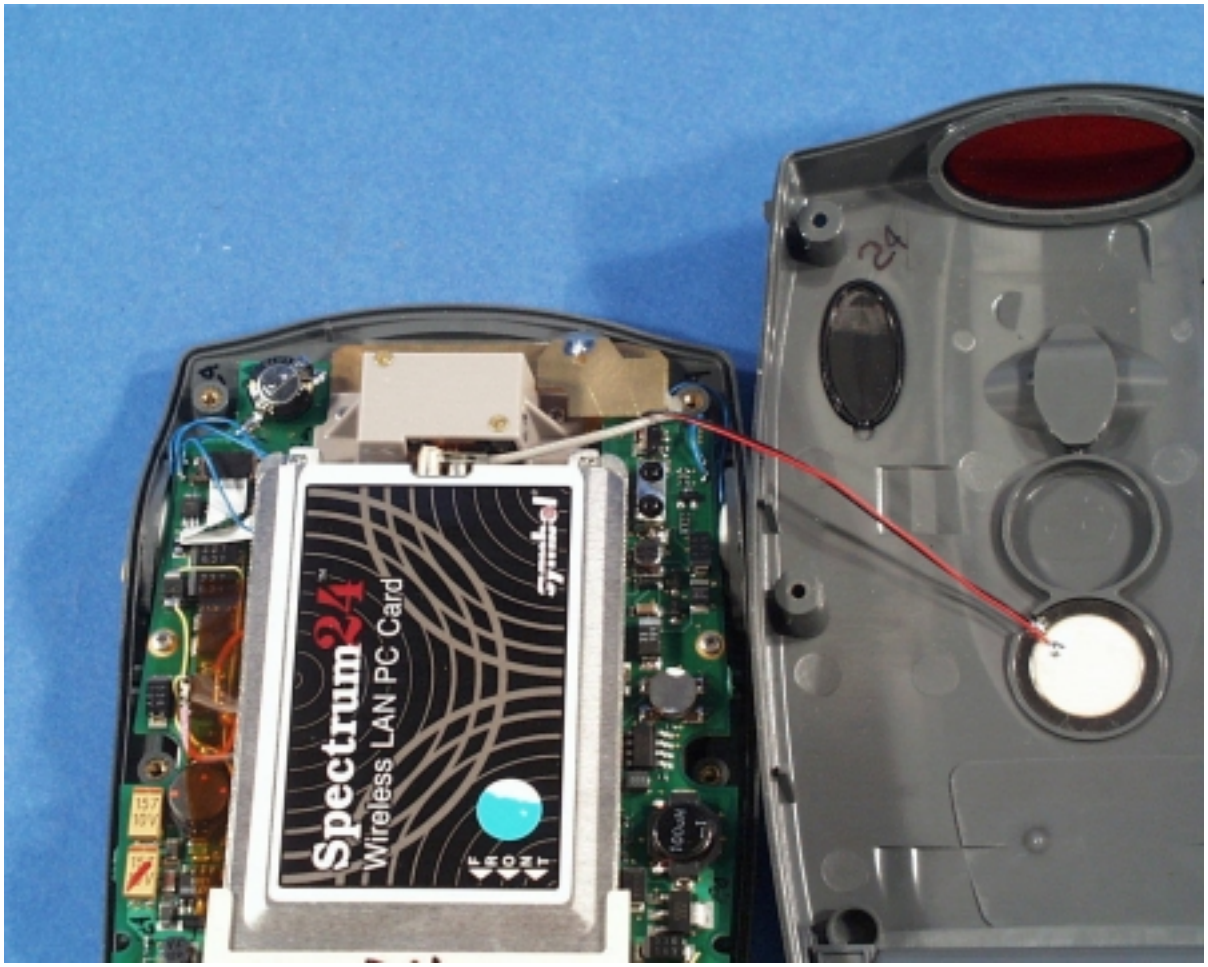

Antenna Installed in Device

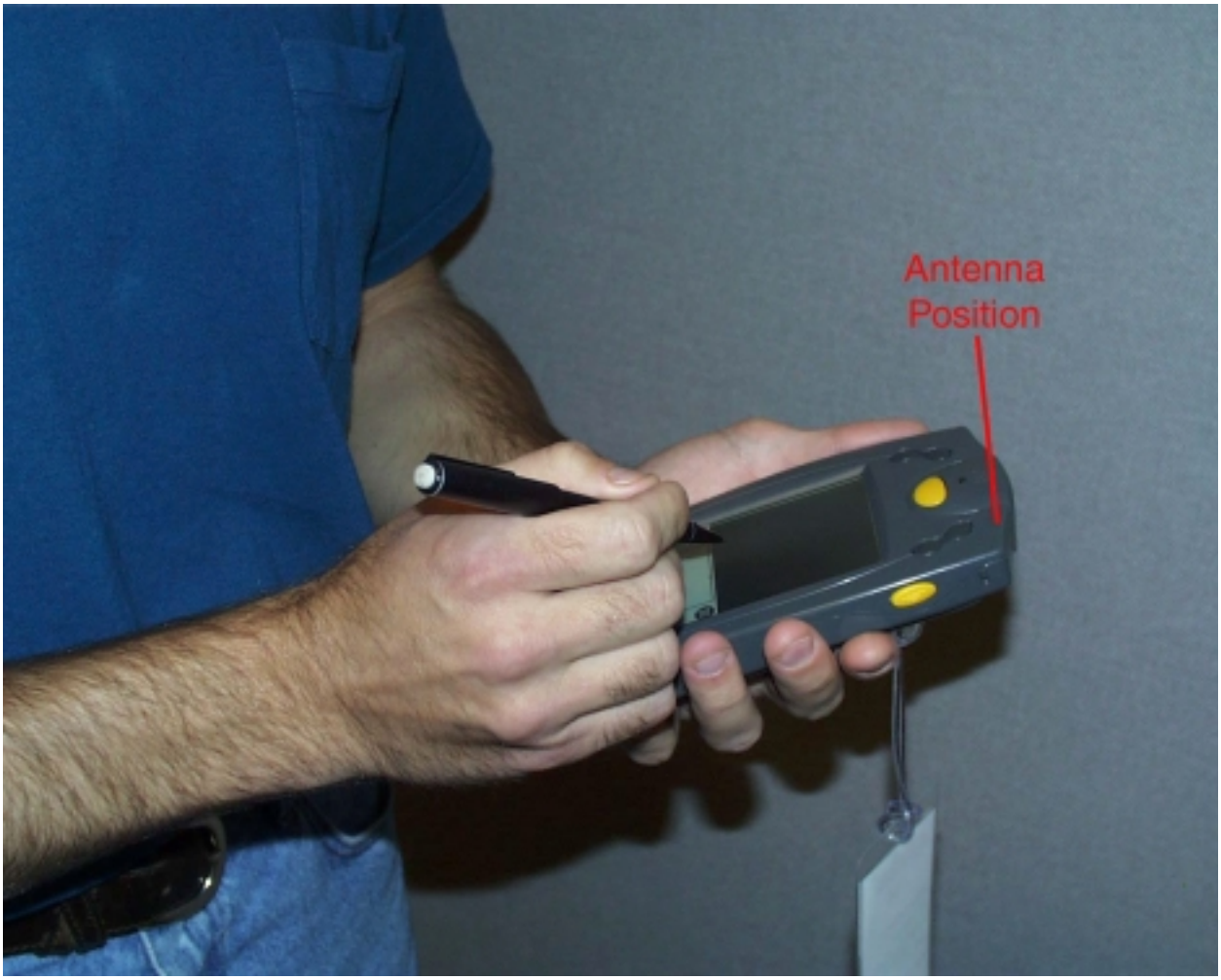

Terminal Use Photo

TECOM PROPRIETARY:
INFORMATION CONTAINED HEREIN SHALL NOT BE DISCLOSED TO
A THIRD PARTY WITHOUT WRITTEN PERMISSION FROM TECOM.

REVISIONS

ZONE	LTR	DESCRIPTION	DATE	APPROVED
.	B	1.16±.12 WAS 2.06±.12. .63 WAS .750 ADDED .71, 41, .20. CHANGED PICTORIALLY. REDRAWN. WO 2357, 2372	3-26-99 JL	BI MMZ JK
4C-D	C	ADDED .38, R.09. NOTCH WAS .06 (IS .13). WO CP90-476	6-10-99 Hvan	BI JK
.	D	DELETED .38, R .09 NOTCH ADDED .06 & .50 3X .06 X 45° WAS 2X ... ADDED .18 MIN, .19 MIN ADDED " NO SOLDER CALLOUT" UPDATED NOTES REDRAWN	7-23-99 JL	
B4	E	ADDED -2 CONFIG & TAB. BLOCK CALLOUT WAS: CONNECTOR, MURATA TYPE BFA WO CP90-924	12-8-99 JL	

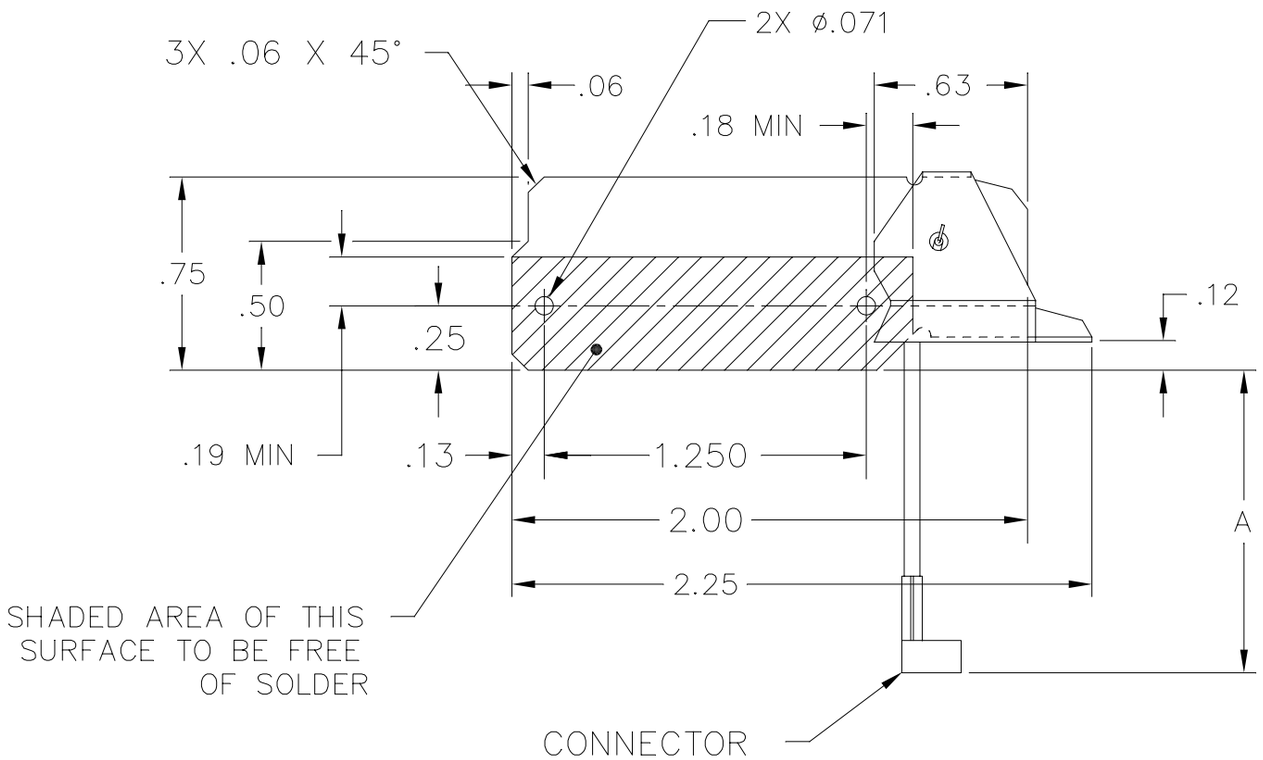

-2	MMCX MALE RT ANGLE	1.85±.12	E
-1	MURATA TYPE BFA	1.16±.12	D
DASH NO	CONNECTOR	A	REV

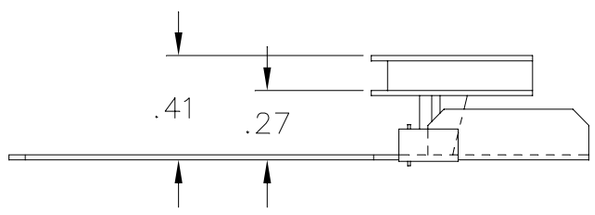

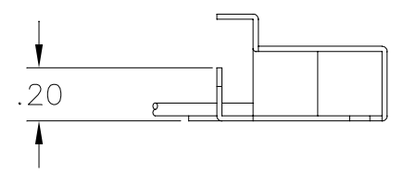

SPECIFICATIONS

FREQUENCY: _____ 2.4-2.485 GHZ
VSWR: _____ 2.0:1 MAX
GAIN: _____ 0dBi NOMINAL
POLARIZATION: _____ LINEAR

5. TOLERANCES ON: .XX ±.03, .XXX ±.010, ANGLES ±.5°

4. SHARP CORNERS & EDGES .005 MAX.

3. FINISH SHALL BE UNIFORM AND EXHIBIT NO EVIDENCE OF CORROSION OR OXIDATION WHEN VIEWED WITH THE UNAIDED EYE. EDGE PLATING ON CUT OR SHEARED SURFACES IS NOT REQUIRED.

2. ALTERNATE:
MATERIAL: CRS 1008, .010 THK.
FINISH: BRIGHT TIN PLATE PER MIL-T-10727A, TYPE 1, ELECTRO DEPOSITED .00010-.00025 IN.

1. MATERIAL: ELECTROLYTIC TIN PLATED STEEL SHEET, .010 THK.

NOTES : UNLESS OTHERWISE SPECIFIED

.500
SCALE

PMIC	
	(10-36063-01)
	(DRAGON)
822903	CP80-875
NEXT ASSY	USED ON
APPLICATION	

UNLESS OTHERWISE SPECIFIED:
DIMENSIONS ARE IN INCHES.
TOLERANCES: .XX ± .03
.XXX ± .010 ANGLES ± 0°30'
MACHINED SURFACE ROUGHNESS 125√
REMOVE BURRS, SHARP EDGES R.005–.015
MACHINED FILLETS R.005–.015
DIMENSIONS ARE AFTER PLATING.
MACHINED DIA'S ON COMMON CENTERLINE
CONCENTRIC WITHIN .005 TIR.
INTERPRET PER ANSI Y14.5M–1982.

HOLE TOLERANCES:

.040 – .128	+.003 −.001	.515 – .750	+.008 −.001
.136 – .228	+.004 −.001	.765 – 1.000	+.010 −.002
.234 – .500	+.006 −.001	1.031 UP	+.015 −.002

MATL ENGR | APPROVAL

CONTRACT NUMBER
CONTRACTOR

DRAWN BY J. LOWE	DATE 1-15-99
CHECKER	MFG ENGR
QA	ENGR BI
PRGM MGR	ENGR

TECOM INDUSTRIES INC.
9324 TOPANGA CYN BLVD CHATSWORTH, CA. 91311
TECHNICAL EXCELLENCE COMMITTED TO QUALITY

TITLE
ANTENNA, 2.4 GHZ

SIZE	CAGE CODE	DWG NO
C	52791	703549

SCALE 2/1 | UNIT WT . | SHEET 1 OF 1