FCC Certification Report for the **LA4111** WLAN PC Card Class II Permissive Change

EXHIBIT 4

RF EXPOSURE INFO

Antenna List by FCC ID

Network Systems Organization

FCC ID: **H9PLA4111** WLAN PC Card, 11 Mbps, Trilogy

Output Power: 60 mW

Grant Date	Ant #:	Model	Symbol P/N	Mfg	Mfg P/N
2/18/00					
	01	Plane	50-21900-008	Tecom	505042C(48IN)
	02	Pipe Bomb 11"x4'	50-11901-048P	Cushcraft	S2403BHPS48RBN
	02.1	Pipe Bomb 11"x15'	50-11901-180P	Cushcraft	S2403BHPS180RB
	03	Rubber Duck	50-21900-007	Cushcraft	RBN2400SXR
	04	Yagi	ML-2499-YGA1-	Cushcraft	PC2415RBN240
	05	Patch	ML-2499-PTA1-	UK	S2406P72PRBN
	06	Panel	ML-2499-PNA1-	Tecom	ML-2499-PNA1-01
	09	4640 Toroid	21-17486-02	AIL Systems Suf	21-17486-02
	10	2040	10-17577-01	Tecom	703117
	11	6140	10-35305-01	UK	
	12	6840	10-32290-01	UK	
	15	Parapolic Grid	ML-2499-PGA1-	Conifer	26T-2400
	16	Pipe Bomb 25"x20'	50-11902-240S	Cushcraft	S2406BHS240RBN
	17	Criticare BFA	50-21900-021	Tecom	703443-1
	18	Corner Patch	ML-2499-DLA1-	Tecom	505126C
	19	Ceiling Panel	ML-2499-SD24-	UK	
	20	6140 OBS	10-17577-02	Tecom	
	X	Trilogy AP	21-20667-01	C&M Wauregan	
	Z	End Cap "C"	10-20511-01	Tecom	822319
Applied For					
	01	7546	10-38649-02	Tecom	
	02	2742	703624-2	Tecom	703624-2
	03	XP	50-21900-024	Tecom	703611
	04	7242	10-35477-01	Tecom	
	05	Toko	50-21900-022	Toko	DAC2450CT1
	06	Vocollect MMCX	50-21900-025	Austin Antenna	200215
	07	6846	10-32290-02	Tecom	
	08	7546D	10-40948-01	Tecom	703634

FCC ID: **H9PLA4111** WLAN PC Card, 11 Mbps, Trilogy

Output Power: 60 mW

Grant Date	Ant #:	Model	Symbol P/N	Mfg	Mfg P/N
	09	1742	703549-2	Tecom	703549-2
	10	Oniel MMCX	50-21900-031	Tecom	703620-2
	11	6846D	10-41003-01	Tecom	703645

RF Exposure Antenna Summary

Network Systems Organization

FCC ID: **H9PLA4111** WLAN PC Card, 11 Mbps, Trilogy

Output Power: 60 mW Class II Permissive Change

Source Based

Mobile DC Factor: 1.000

Portable DC Factor: 1.000

Portable Antennas

Ant No	Model	Symbol P/N	Type	Gain (dBi)	Cabel Loss (dB)	Pout (dBm)	EIRP (mW)	TR Status	Device Type	Tx Limited
01.	7546	10-38649-02	F-Element	0.0	0.31	17.47	55.9	Tested	Hand Held	
02.	2742	703624-2	F-Element	0.0	0.13	17.65	58.2	Tested	Hand Held	
03.	XP	50-21900-024	Slot	0.0	0.58	17.21	52.5	Tested	Hand Held	
04.	7242	10-35477-01	F-Element	0.0	0.13	17.65	58.2	Tested	Hand Held	
05.	Toko	50-21900-022	Puck	0.0	0.00	17.78	60.0	Tested	Hand Held	
07.	6846	10-32290-02	F-Element	0.0	0.34	17.44	55.5	See # 2	Hand Held	
08.	7546D	10-40948-01	F-Element	0.0	0.22	17.57	57.1	See # 2	Hand Held	
09.	1742	703549-2	F-Element	0.0	0.11	17.67	58.4	See # 2	Hand Held	
11.	6846D	10-41003-01	Slot	0.0	0.37	17.41	55.1	See # 2	Hand Held	

Body Worn Antennas

Ant No	Model	Symbol P/N	Type	Gain (dBi)	Cabel Loss (dB)	Pout (dBm)	EIRP (mW)	TR Status	Device Type	Tx Limited
06.	Vocollect MMCX	50-21900-025	Dipole	2.0	0.25	17.53	89.8	Tested + SAR	Body Worn	
10.	Oniel MMCX	50-21900-031	Slot	0.0	0.37	17.41	55.1	See # 3	Body Worn	

Antenna Gain listed without cable
TR Status refers to weither the antena was tested. If not refer to the directed antenna test data

Duty Cycle Factors are applied to MPE and EIRP

Tx Limited configurations are for low power versions of the radio. See the specific antenna exhibit for detail

Monday, May 22, 2000 10:56 AM

7540 / 7546 Antenna

Location	Hand Held Device
Pattern	Omni
Type	F-Element
Max Gain	0 dBi
Physical	See attached dwg
Cable	MXYH75, RG-178
Symbol P/N	10-38649-01, -02

The **7540** antenna is 0 dBi omni-directional in azimuth plane. It is mounted internally on the top end of the terminal as shown in the attached photo. The **7540** uses the MuRatta BFA connector while the **7546** is identical to the **7540** but uses the MMCX connector. In its use it would be within 20 cm of a persons hand but more than 20 cm from the users body. It is used in portable devices. The following RF exposure information is included in a prominent place in the device's user manual to inform the user of safety issues as required by OET Bulletin 65, Supplement C. for EIRP greater than 200 mW.

"Important Note: To comply with FCC RF exposure requirements, this hand-held device is approved for operation in a user's hand when there is 20 cm or more between the antenna and everyone's body."

Antenna Installed in Device

Terminal Use Photo

REVISIONS							
REV.	ZONE	No.	DESCRIPTION	E.C.	BY	APVD.	DATE
A			RELEASED PER EDR #50790		CT		10/5/99

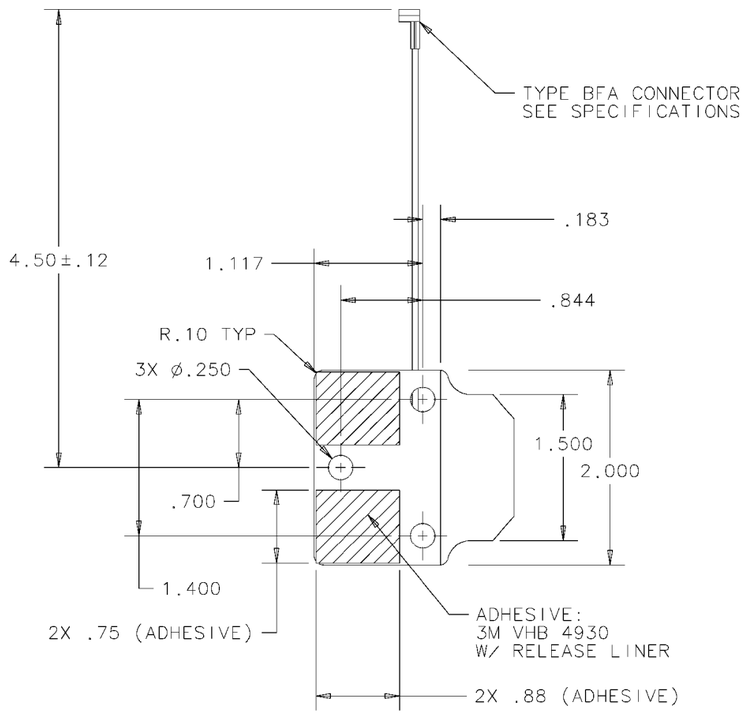

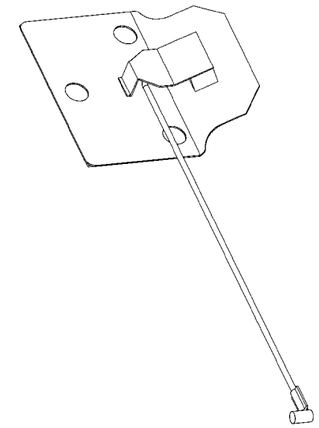

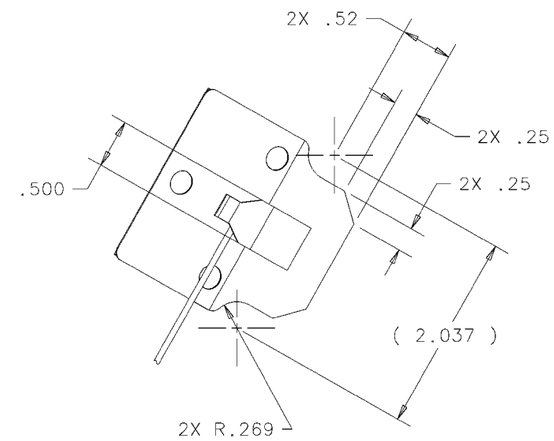

VIEW: A-A

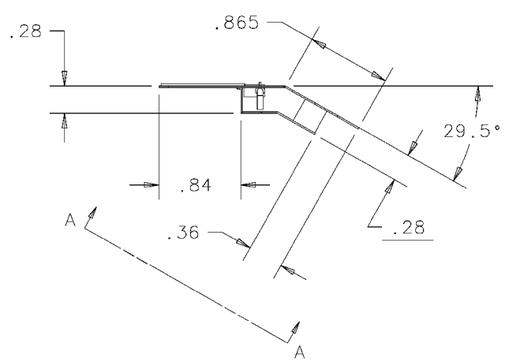

SPECIFICATIONS

FREQUENCY:	2.4-2.485 GHZ
VSWR:	2.0:1 MAX
GAIN:	0dBi NOMINAL
POLARIZATION:	LINEAR
CABLE:	MURATA MXYH75
CONNECTOR:	TYPE BFA

NOTES: UNLESS OTHERWISE SPECIFIED

1. MATERIAL: CRS 1008, .015 THK
2. FINISH: BRIGHT TIN PLATE PER MIL-T-10727A, TYPE1, ELECTRO DEPOSITED .00010-.0025 INCHES. FINISH SHALL BE UNIFORM AND EXHIBIT NO EVIDENCE OF CORROSION OR OXIDATION WHEN VIEWED WITH THE UNAIDED EYE. EDGE PLATING ON CUT OR SHEARED SURFACES IS NOT REQUIRED.
3. TOLERANCES: .XX ±.03
   .XXX ±.010
   ANGLES ± 1°
4. PACKAGE IAW SYMBOL PACKAGING SPECIFICATION 40-04100-013
5. BREAK AND DEBUR ALL SHARP EDGES .005 MAX PRIOR TO PLATING

ITEM	QTY.	PART NO.	DESCRIPTION	REMARKS/REF. SYMBOL

NEXT ASSY	USED ON
	PDT 754X

THE DWG. & SPECIFICATION CONTAINED HEREON ARE PROPRIETARY AND MUST NOT BE USED, COPIED, REPRODUCED NOR ITS CONTENTS COMMUNICATED TO OTHERS EXCEPT IN ACCORDANCE WITH WRITTEN INSTRUCTIONS RECEIVED FROM SYMBOL TECHNOLOGIES INC.

DO NOT SCALE DRAWING

DIMENSIONS ARE IN INCHES
UNLESS OTHERWISE SPECIFIED

	MM	INCH
.XX	+/-	+/- .01
.XXX	+/-	+/- .005

ANGLES ± 1° FRACTIONS ± 1/64

MATERIAL: -----

FINISH: -----

APPROVALS		DATE
DRAWN	C.THELEMANN	10/5/99
CHECKED	M.SAVONA	10/5/99
ENGINEER	C.THELEMANN	10/5/99
MFG. ENG	M.LOSPINUSO	10/5/99
PRODUCT	T.HOFBAUER	10/5/99
QUALITY	B.WATSON	10/5/99

SYMBOL TECHNOLOGIES INC.
Bohemia, New York

ANTENNA: 2.4 GHz TYPE F 7500

SIZE	DWG. NO.	REV.
C	10-38649-01	A

SCALE: 1/1 | SOLID MODEL YES X NO | SHEET 1 OF 1

REVISIONS							
REV.	ZONE	No.	DESCRIPTION	E.C.	BY	APVD.	DATE
A			RELEASED PER EDR #53455		MB		01/10/00

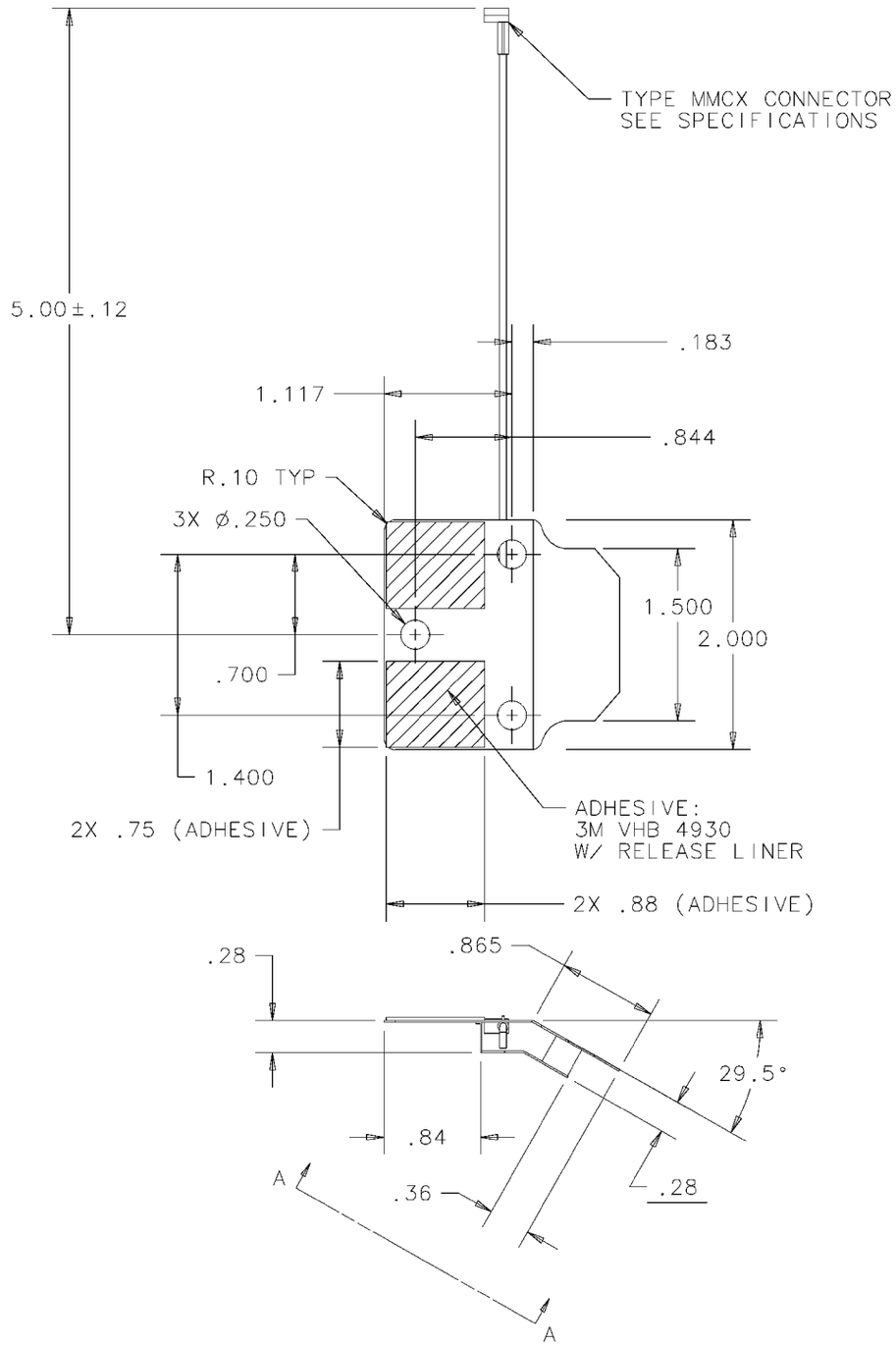

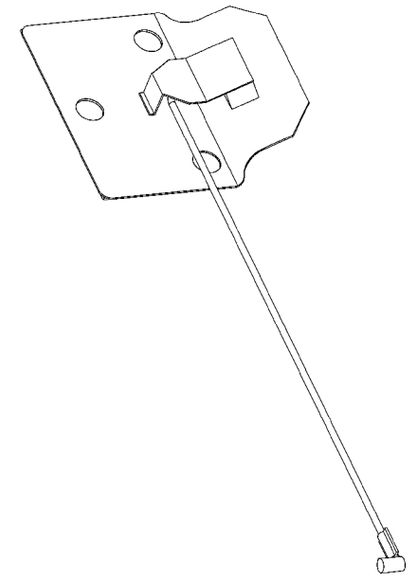

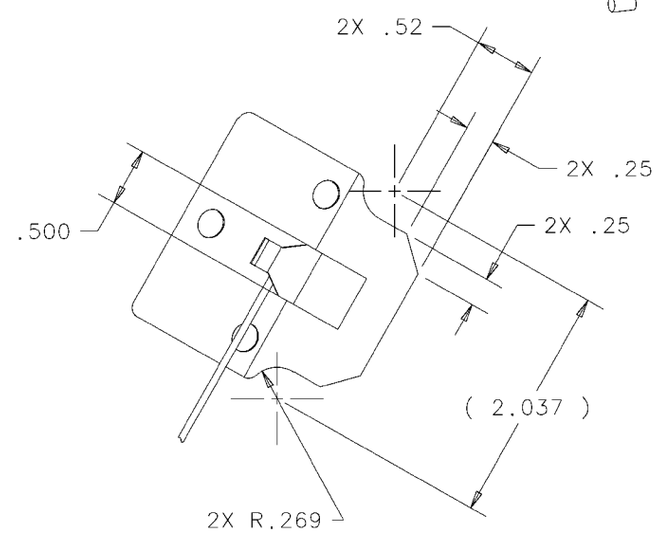

VIEW: A-A

SPECIFICATIONS

FREQUENCY:	2.4-2.485 GHZ
VSWR:	2.0:1 MAX
GAIN:	0dBi NOMINAL
POLARIZATION:	LINEAR
CABLE:	RG178
CONNECTOR:	TYPE MMCX,50-22100-029

NOTES: UNLESS OTHERWISE SPECIFIED

1. MATERIAL: CRS 1008, .015 ±.001THK
2. FINISH: BRIGHT TIN PLATE PER MIL-T-10727A, TYPE1, ELECTRO DEPOSITED .00010-.00025 INCHES. FINISH SHALL BE UNIFORM AND EXHIBIT NO EVIDENCE OF CORROSION OR OXIDATION WHEN VIEWED WITH THE UNAIDED EYE, EDGE PLATING ON CUT OR SHEARED SURFACES IS NOT REQUIRED.
3. TOLERANCES: .XX ±.03
   .XXX ±.010
   ANGLES ± 1°
4. PACKAGE IAW SYMBOL PACKAGING SPECIFICATION 40-04100-013
5. BREAK AND DEBUR ALL SHARP EDGES .005 MAX PRIOR TO PLATING

ITEM	QTY.	PART NO.	DESCRIPTION	REMARKS/REF. SYMBOL

NEXT ASSY	USED ON
	PDT 754X

THE DWG. & SPECIFICATION CONTAINED HEREON ARE PROPRIETARY AND MUST NOT BE USED, COPIED, REPRODUCED NOR ITS CONTENTS COMMUNICATED TO OTHERS EXCEPT IN ACCORDANCE WITH WRITTEN INSTRUCTIONS RECEIVED FROM SYMBOL TECHNOLOGIES INC.

DO NOT SCALE DRAWING

DIMENSIONS ARE IN INCHES
UNLESS OTHERWISE SPECIFIED

	MM	INCH
.XX	+/-	+/- .01
.XXX	+/-	+/- .005

ANGLES ± 1° FRACTIONS ± 1/64

MATERIAL:

FINISH:

APPROVALS		DATE
DRAWN	M.BUNYON	01/10/00
CHECKED	M.SAVONA	01/10/00
ENGINEER	C.THELEMANN	01/10/00
MFG. ENG.		
PRODUCT		
QUALITY		
ANALYST	L.DOBKOWSKI	01/10/00

SYMBOL TECHNOLOGIES INC.
Bohemia, New York

ANTENNA:2.4 GHz TYPE F

SIZE	DWG. NO.	REV.
C	10-38649-02	A

SCALE: 1:1 | SOLID MODEL YES NO ☒ | SHEET 1 OF 1

2740 / 2742 Antenna

The 2740 antenna is 0 dBi omni-directional in azimuth plane. It is mounted internally on the top end of the terminal as shown in the attached photo. The 2740 uses a Murata Erie BFA connector while the 2742 uses the MMCX. In its use it would be within 20 cm of a persons hand but more than 20 cm from the users body. It is used in portable devices. The following RF exposure information is included in a prominent place in the device's user manual to inform the user of safety issues as required by OET Bulletin 65, Supplement C for EIRP greater than 200 mW.

Location	Hand Held Device
Pattern	Omni
Type	F-Element
Max Gain	0 dBi
Physical	See attached dwg
Cable	MXYH75, RG-178
Symbol P/N	703624-1, 703624-2

"Important Note: To comply with FCC RF exposure requirements, this hand-held device is approved for operation in a user's hand when there is 20 cm or more between the antenna and everyone's body."

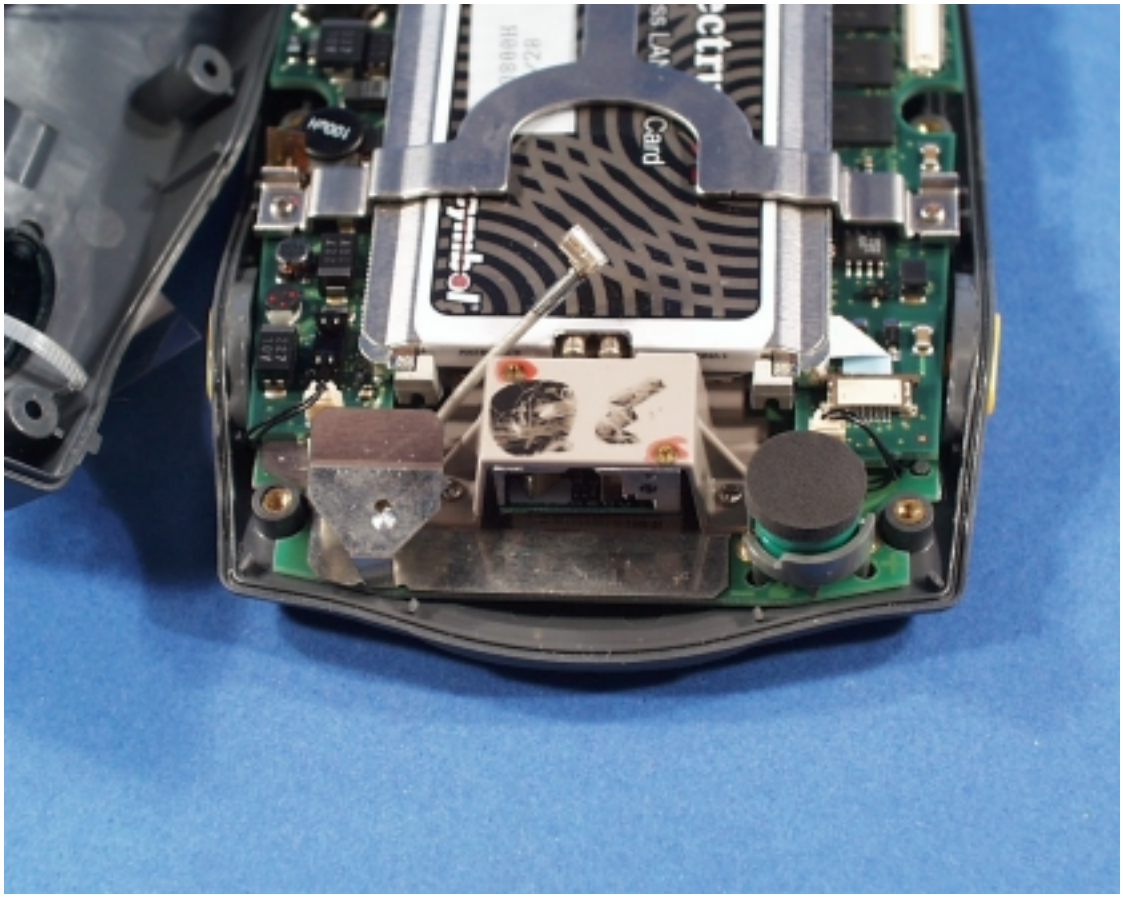

Antenna Installed in Device

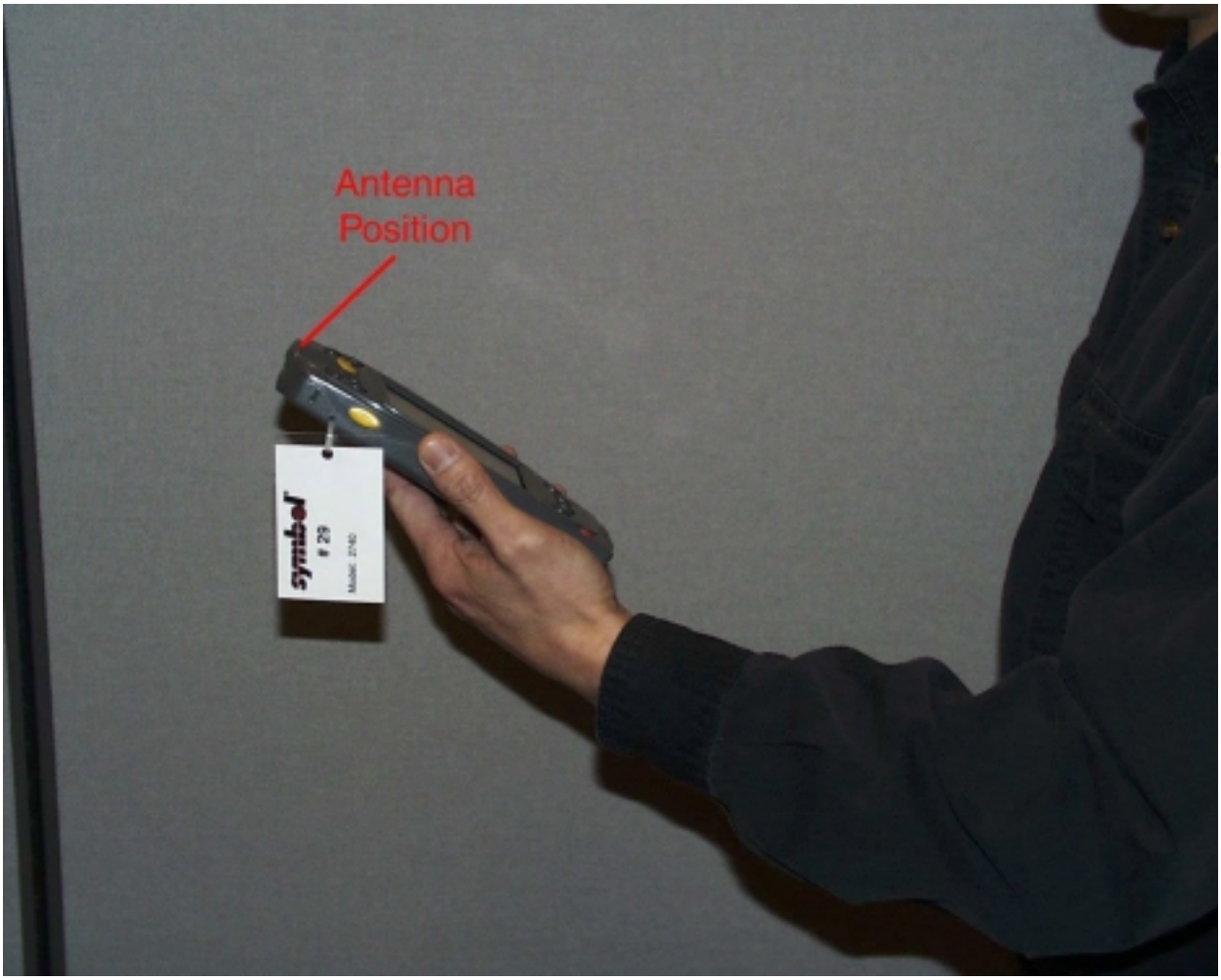

Terminal Use Photo

TECOM PROPRIETARY:
INFORMATION CONTAINED HEREIN SHALL NOT BE DISCLOSED TO A THIRD PARTY WITHOUT WRITTEN PERMISSION FROM TECOM.

REVISIONS

ZONE	LTR	DESCRIPTION	DATE	APPROVED

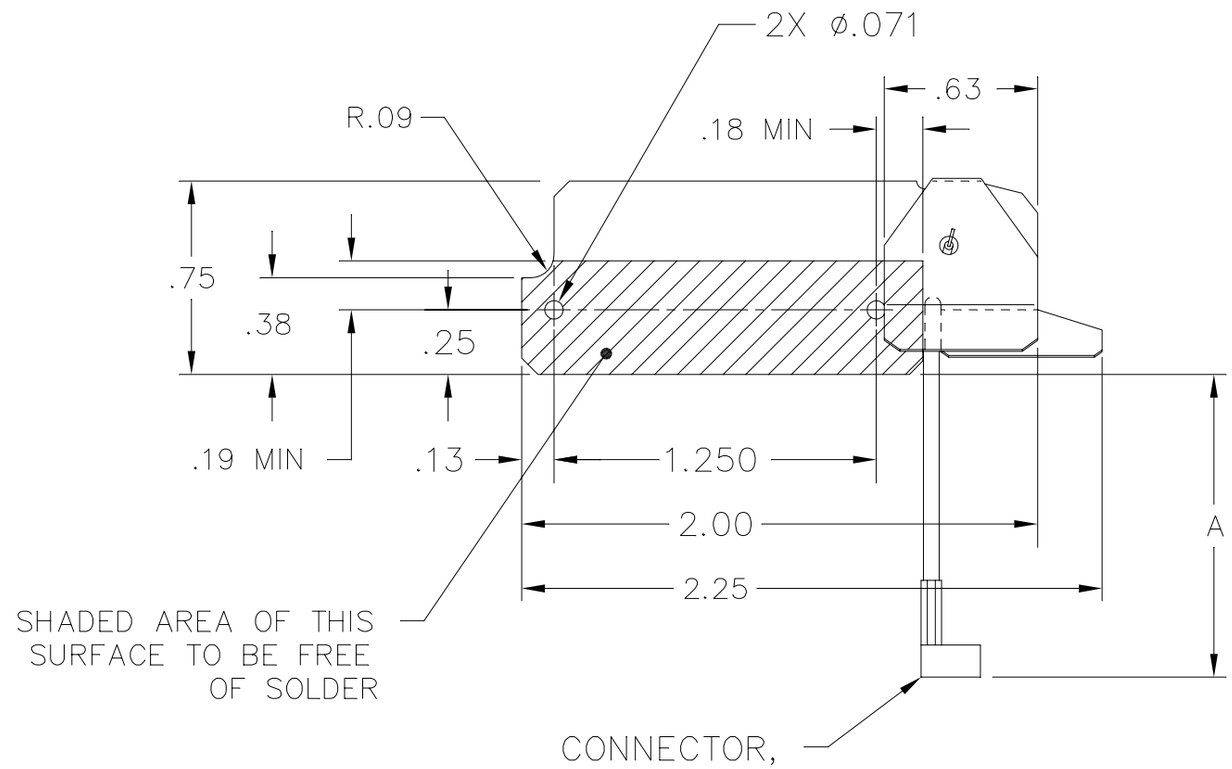

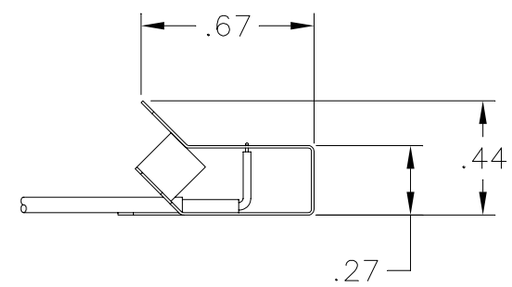

SPECIFICATIONS

FREQUENCY: _____ 2.4-2.485 GHZ
VSWR: _____ 2.0:1 MAX
GAIN: _____ 0dBi NOMINAL
POLARIZATION: _____ LINEAR

DASH NO	CONNECTOR	A	REV
-2	MMCX MALE RT ANGLE	1.85±.12	-
-1	MURATA TYPE BFA	1.16±.12	-

4. SHARP CORNERS & EDGES .005 MAX.

3. FINISH SHALL BE UNIFORM AND EXHIBIT NO EVIDENCE OF CORROSION OR OXIDATION WHEN VIEWED WITH THE UNAIDED EYE. EDGE PLATING ON CUT OR SHEARED SURFACES IS NOT REQUIRED.

2. ALTERNATE:
MATERIAL: CRS 1008, .010 THK.
FINISH: BRIGHT TIN PLATE PER MIL-T-10727A, TYPE 1, ELECTRO DEPOSITED .00010-.00025 IN.

1. MATERIAL: ELECTROLYTIC TIN PLATED STEEL SHEET, .010 THK.

.500
SCALE

NOTES : UNLESS OTHERWISE SPECIFIED

PMIC	
	(PICO II)
823335	CP90-924
NEXT ASSY	USED ON
APPLICATION	

UNLESS OTHERWISE SPECIFIED:
DIMENSIONS ARE IN INCHES.
TOLERANCES: .XX ± .03
.XXX ± .010 ANGLES ± 0°30'
MACHINED SURFACE ROUGHNESS 125✓
REMOVE BURRS, SHARP EDGES R.005–.015
MACHINED FILLETS R.005–.015
DIMENSIONS ARE AFTER PLATING.
MACHINED DIA'S ON COMMON CENTERLINE CONCENTRIC WITHIN .005 TIR.
INTERPRET PER ANSI Y14.5M–1982.

HOLE TOLERANCES:

.040 – .128	+.003 −.001	.515 – .750	+.008 −.001
.136 – .228	+.004 −.001	.765 – 1.000	+.010 −.002
.234 – .500	+.006 −.001	1.031 UP	+.015 −.002

MATL ENGR | APPROVAL

CONTRACT NUMBER

CONTRACTOR

DRAWN BY J. LOWE	DATE 12/1/99
CHECKER	MFG ENGR
QA	ENGR
PRGM MGR	ENGR

TECOM INDUSTRIES INC.
9324 TOPANGA CYN BLVD CHATSWORTH, CA. 91311
TECHNICAL EXCELLENCE COMMITTED TO QUALITY

TITLE
ANTENNA, 2.4 GHZ

SIZE	CAGE CODE	DWG NO
C	52791	703624

SCALE 2/1 | UNIT WT . | SHEET 1 OF 1

(703595)

Amity BFA / Amity MMCX Antenna

The Amity antenna is 0 dBi omni-directional in azimuth plane. It is available with either a MuRatta BFA or MMCX connector. It is mounted internally on the top end of the terminal as shown in the attached photo. In its use it would be within 20 cm of a persons hand but more than 20 cm from the users body. It is used in portable devices. The following RF exposure information is included in a prominent place in the device's user manual to inform the user of safety issues as required by OET Bullitin 65, Supplement C for EIRP greater than 200 mW.

Location	Hand Held Device
Pattern	Omni
Type	Slot
Max Gain	0 dBi
Physical	See attached dwg
Cable	MXYH75, RG-178
Symbol P/N	703611-1, 2

"Important Note: To comply with FCC RF exposure requirements, this hand-held device is approved for operation in a user's hand when there is 20 cm or more between the antenna and everyone's body."

Antenna Installed in Device

Terminal Use Photo

TECOM PROPRIETARY:
INFORMATION CONTAINED HEREIN SHALL NOT BE DISCLOSED TO
A THIRD PARTY WITHOUT WRITTEN PERMISSION FROM TECOM.

PROPOSAL DWG

REVISIONS

ZONE	LTR	DESCRIPTION	DATE	APPROVED
.	A	9.33±.12 WAS TBD±.12 ADDED ø.125 MAX & .68±.09 ADDED STRAIN RELIEF SLEEVE (PICTURE CHG) ADDED FOAM SUPPORT (PICTURE & CALLOUT) REDRAWN WO 2654	11-5-99 JL	

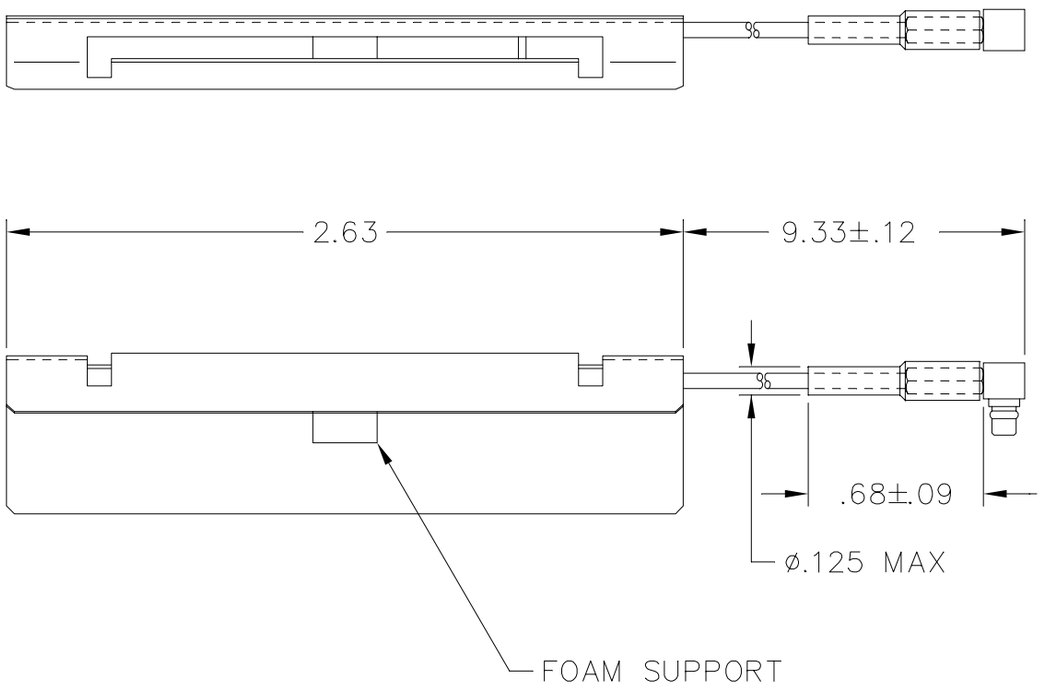

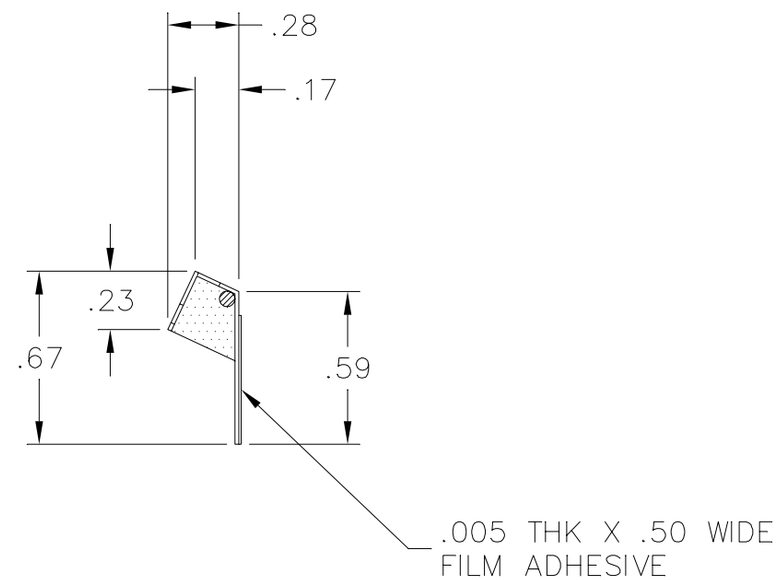

SPECIFICATIONS

FREQUENCY:	2.4-2.485 GHZ
VSWR	2.0:1 MAX
GAIN	0dBi NOMINAL
POLARIZATION	LINEAR
CONNECTOR:	MMCX MALE

4. SHARP CORNERS & EDGES .005 MAX.

3. FINISH SHALL BE UNIFORM AND EXHIBIT NO EVIDENCE OF CORROSION OR OXIDATION WHEN VIEWED WITH THE UNAIDED EYE. EDGE PLATING ON CUT OR SHEARED SURFACES IS NOT REQUIRED.

2. ALTERNATE:
MATERIAL: CRS 1008, .015 THK.
FINISH: BRIGHT TIN PLATE PER MIL-T-10727A, TYPE 1, ELECTRO DEPOSITED .00010-.00025 IN.

1. MATERIAL: ELECTROLYTIC TIN PLATED STEEL SHEET, .015 THK.

.500
SCALE

NOTES : UNLESS OTHERWISE SPECIFIED

PMIC	
823283	CP90-065
NEXT ASSY	USED ON
APPLICATION	

UNLESS OTHERWISE SPECIFIED:
DIMENSIONS ARE IN INCHES.
TOLERANCES: .XX ± .03
.XXX ± .010 ANGLES ± 0°30'
MACHINED SURFACE ROUGHNESS 125✓
REMOVE BURRS, SHARP EDGES R.005–.015
MACHINED FILLETS R.005–.015
DIMENSIONS ARE AFTER PLATING.
MACHINED DIA'S ON COMMON CENTERLINE
CONCENTRIC WITHIN .005 TIR.
INTERPRET PER ANSI Y14.5M–1982.

HOLE TOLERANCES:

.040 – .128	+.003 −.001	.515 – .750	+.008 −.001
.136 – .228	+.004 −.001	.765 – 1.000	+.010 −.002
.234 – .500	+.006 −.001	1.031 UP	+.015 −.002

MATL ENGR | APPROVAL

CONTRACT NUMBER

CONTRACTOR

DRAWN BY J. LOWE	DATE 10-11-99
CHECKER	MFG ENGR
QA	ENGR BI
PRGM MGR	ENGR

TECOM INDUSTRIES INC.
9324 TOPANGA CYN BLVD CHATSWORTH, CA. 91311
TECHNICAL EXCELLENCE COMMITTED TO QUALITY

TITLE
ANTENNA,
SLOT, 2.4 GHZ

SIZE	CAGE CODE	DWG NO
C	52791	703611

SCALE 2/1 | UNIT WT . | SHEET 1 OF 1

7240 / 7242 Antenna

The **7240** antenna is 0 dBi omni-directional in azimuth plane. It is mounted internally on the top end of the terminal as shown in the attached photo. The **7240** uses the MuRatta BFA connector. The **7242** is identical to the **7240** but uses the MMCX connector. In its use it would be within 20 cm of a persons hand but more than 20 cm from the users body. It is used in portable devices. The following RF exposure information is included in a prominent place in the device's user manual to inform the user of safety issues as required by OET Bulletin 65, Supplement C.

Location	Hand Held Device
Pattern	Omni
Type	F-Element
Max Gain	0 dBi
Physical	See attached dwg
Cable	MXYH75, RG-178
Symbol P/N	10-35475-01, 10-35477-01

"Important Note: To comply with FCC RF exposure requirements, this hand-held device is approved for operation in a user's hand when there is 20 cm or more between the antenna and everyone's body."

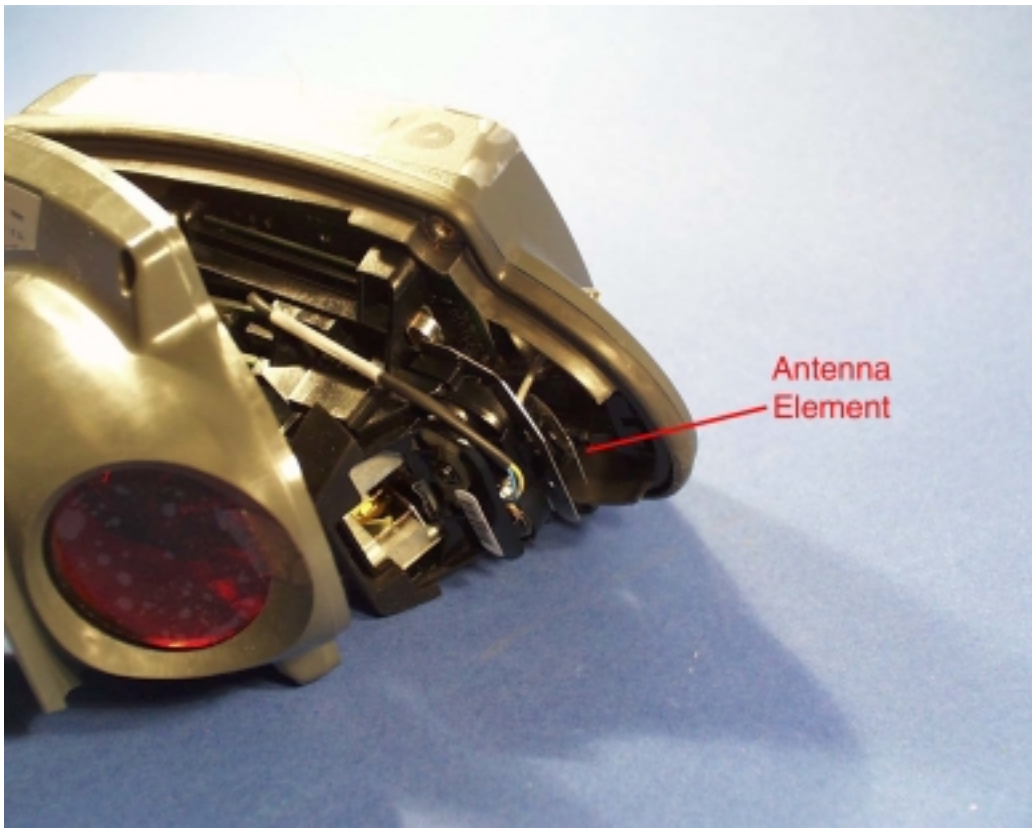

Antenna Installed in Device

Terminal Use Photo

REVISIONS							
REV	ZONE	No.	DESCRIPTION	E.C.	BY	APVD.	DATE
A			RELEASED PER EDR #54642		MB		02/11/00

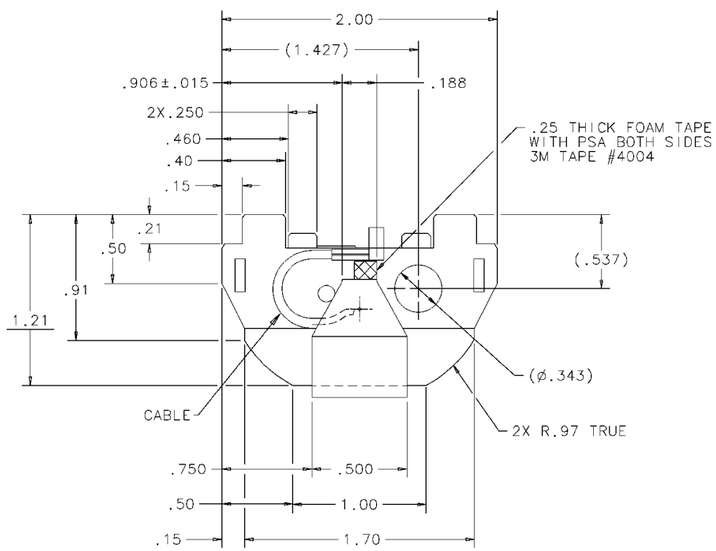

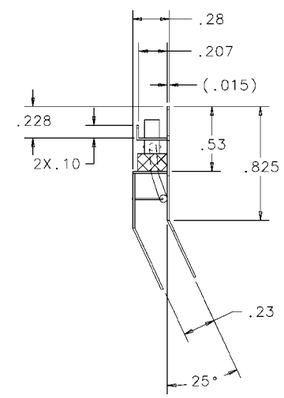

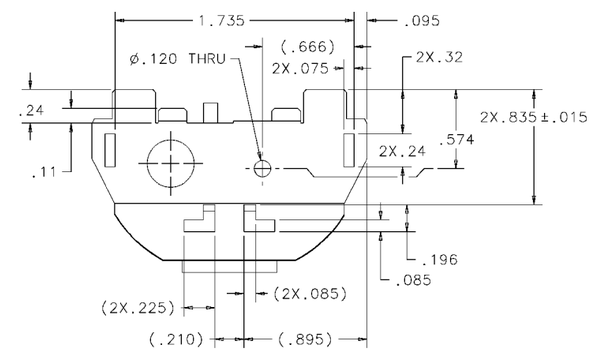

NOTES: UNLESS OTHERWISE SPECIFIED:

1) MATERIAL: CRS 1008, .015 ±.001 THK, SHARP CORNERS AND EDGES .005 MAX.
ALTERNATE: ELECTROLYTIC TIN COATED COLD ROLLED STEEL .015 THICK.
NON-PLATED EDGES ARE PERMISSIBLE.

2) FINISH: BRIGHT TIN PLATE PER MIL-T-10727A, TYPE 1, ELECTRO DEPOSITED .00010-.00025 IN. FINISH SHALL BE UNIFORM EXHIBIT NO EVIDENCE OF CORROSION OR OXIDATION WHEN VIEWED WITH THE UNAIDED EYE. EDGE PLATING ON CUT OR SHEARED SURFACES IS NOT REQUIRED.

3) PACKAGE ITEMS IN ACCORDANCE WITH STI GENERAL PACKAGING SPEC #50-04100-013.

4) PARTS SHALL MEET THE CRITERIA PER STI WORKMANSHIP STANDARD SS-03800-57.

SPECIFICATIONS

FREQUENCY:	2.4-2.485 GHz
VSWR:	2.0:1
GAIN:	0dbi NOMINAL
POLARIZATION:	LINEAR
CABLE:	MURATA MXYH75
CONNECTOR:	TYPE BFA

* PROPRIETARY CONTENT *
THE DRAWING CONTENT AND SPECIFICATION CONTAINED HEREIN ARE PROPRITARY AND MUST NOT BE USED, COPIED, REPRODUCED OR OTHERWISE DEALT WITH OR COMMUNICATED TO OTHERS EXCEPT IN ACCORDANCE WITH WRITTEN INSTRUCTIONS RECEIVED FROM:
SYMBOL TECHNOLOGIES INC

COMPUTER GENERATED DRAWING
DO NOT SCALE

TOLERANCE CHART
UNLESS OTHERWISE SPECIFIED DIMENSIONS ARE IN INCHES

	INCH	MM
.XX	+/- .01	+/- .25
.XXX	+/- .005	+/- .125

ANGLES ± 1° FRACTIONS ± 1/64

APPROVALS		DATE
DRAWN	JKW	05-05-99
CHECKED	M.SAVONA	05-05-99
ENGINEER	J.CONNELLY	05-05-99
ANALYST	L.DOBKOWSKI	05-05-99
MFG. ENG.		
PRODUCT		
QUALITY		

SYMBOL TECHNOLOGIES INC.
One Symbol Plaza
Holtsville, NY 11742

ANTENNA: 2.4GHZ

SIZE D | DWG. NO. 10-35475-01 | REV A

SCALE: 2/1 | SOLID MODEL YES ☒ NO ☐ | SHEET 1 OF 1

REVISIONS							
REV	ZONE	NO.	DESCRIPTION	E.C.	BY	APVD.	DATE
1			INITIAL RELEASE PER PPD# 51859		JKW		11-03-99
2			REVISED PER PPD #52781 1) REVISED PER TECOM'S DWG		MB		12/3/99
3			REVISED PER PPD #53240 1) DIM .45 WAS .42 2) ADDED NOTE 5		MB		12/29/99

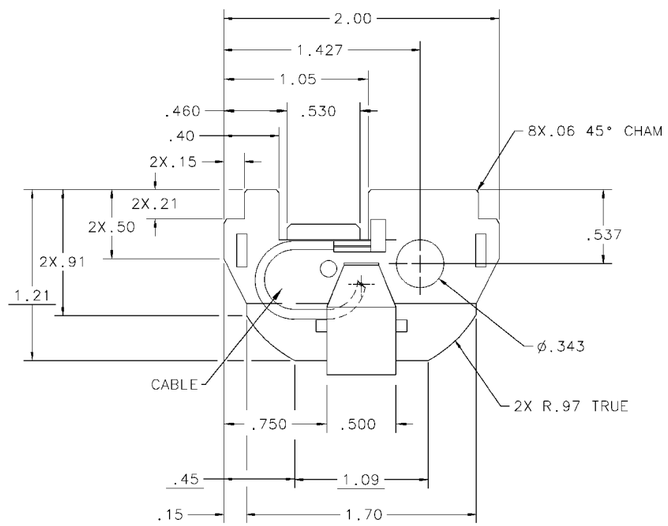

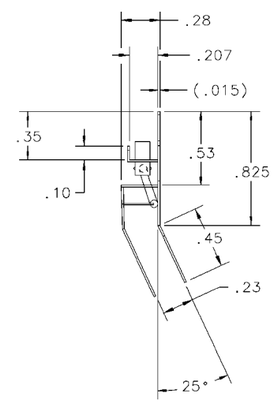

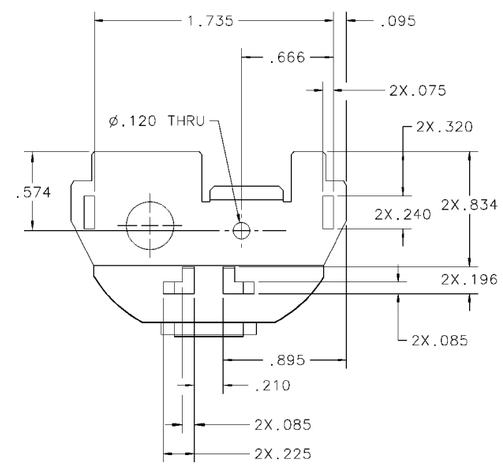

NOTES: UNLESS OTHERWISE SPECIFIED:

1. MATERIAL: CRS 1008, .015 THK, SHARP CORNERS AND EDGES .005 MAX. ALTERNATE: ELECTROLYTIC TIN.
2. FINISH: BRIGHT TIN PLATE PER MIL-T-10727A, TYPE 1, ELECTRO DEPOSITED .00010-.00025 IN. FINISH SHALL BE UNIFORM EXHIBIT NO EVIDENCE OF CORROSION OR OXIDATION WHEN VIEWED WITH THE UNAIDED EYE. EDGE PLATING ON CUT OR SHEARED SURFACES IS NOT REQUIRED.
3. PACKAGE ITEMS IN ACCORDANCE WITH STI GENERAL PACKAGING SPEC #50-04100-013.
4. WORKMANSHIP PER STI STANDARD SS-03800-57.
5. ALL UNDERLINED DIMENSIONS ARE OUT OF SCALE AND ARE NOT REFLECTED IN THE 3-D DATA BASE

SPECIFICATIONS

FREQUENCY:	2.4-2.485 GHz
VSWR:	2.0:1
GAIN:	0dbi NOMINAL
POLARIZATION:	LINEAR
CABLE:	RG178
CONNECTOR:	50-22100-029 (MMCX)

ITEM	QTY	PART NO.	DESCRIPTION	REMARKS/REF. SYMBOL

PARTS LIST

NEXT ASSY	USED ON
	PDT 7200

THE DRAWING & SPECIFICATION CONTAINED HEREIN ARE PROPRIETARY AND MUST NOT BE USED, COPIED, REPRODUCED, OR OTHERWISE DEALT WITH NOR ITS CONTENTS COMMUNICATED TO OTHERS EXCEPT IN ACCORDANCE WITH WRITTEN INSTRUCTIONS RECIEVED FROM SYMBOL TECHNOLOGIES INC.

DO NOT SCALE DRAWING

DIMENSIONS ARE IN
UNLESS OTHERWISE SPECIFIED

	MM	INCH
.XX	+/-	+/- .03
.XXX	+/-	+/- .010

ANGLES +/- 0°30' FRACTIONS +/- 1/64

MATERIAL: SEE NOTE 1

FINISH: SEE NOTE 2

APPROVALS		DATE
DRAWN	JKW	11-03-99
CHECKED	M.SAVONA	11-03-99
ENGINEER	J.CONNELLY	11-03-99
MFG. ENG.		
PRODUCT		
QUALITY		
ANALYST	L.DOBKOWSKI	12-29-99

SYMBOL TECHNOLOGIES INC.
Bohemia, New York

ANTENNA: 2.4GHZ, 11/2MBPS, PDT7200

SIZE D | DWG. NO. 10-35477-01 | REV 3

SCALE: 2:1 | SOLID MODEL YES ☒ NO | SHEET 1 OF 1

Toko Antenna

The Toko antenna is 0 dBi omni-directional in azimuth plane. It is mounted as a through hole device directly on the printed circuit board of a hand held device. In its use it would be within 20 cm of a persons hand but more than 20 cm from the users body. It is used in portable devices. The following RF exposure information is included in a prominent place in the device's user manual to inform the user of safety issues as required by OET Bullitin 65, Supplement C for EIRP greater than 200 mW.

Location	Hand Held Device
Pattern	Omni
Type	Dielectric Puck
Max Gain	2.15 dBi
Physical	See Attached Dwg.
Cable	none
Symbol P/N	50-21900-022

"Important Note: To comply with FCC RF exposure requirements, this hand-held device is approved for operation in a user's hand when there is 20 cm or more between the antenna and everyone's body."

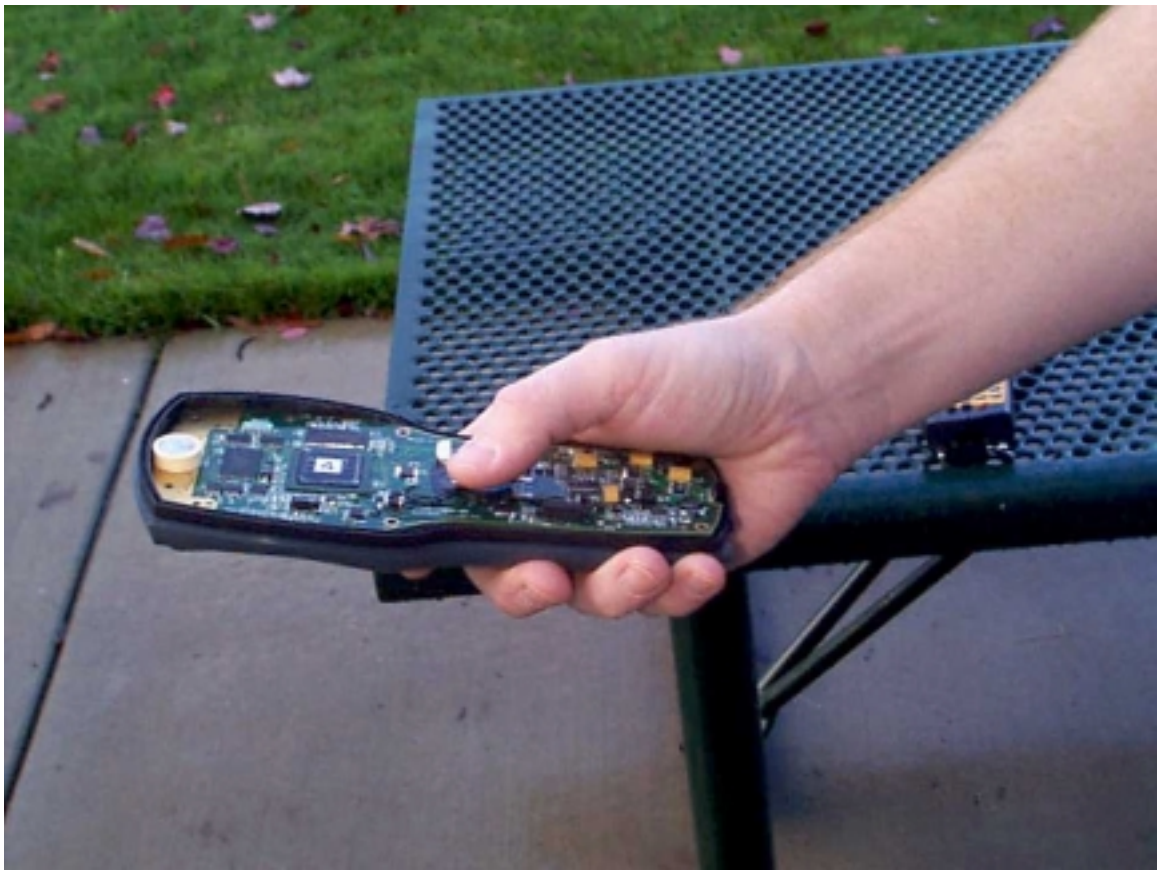

Installed Antenna Photo

Terminal Use Photo

ANTENNA ELEMENT FOR 2.4 GHz

DESCRIPTION

The DAC Series is a miniature dielectric antenna element for 2.4 GHz wireless LAN systems. This antenna has vertical polarization characteristics. TOKO's proprietary ceramic dielectric material provides excellent stability and sensitivity. It is mountable in Type II extended PCMCIA cards.

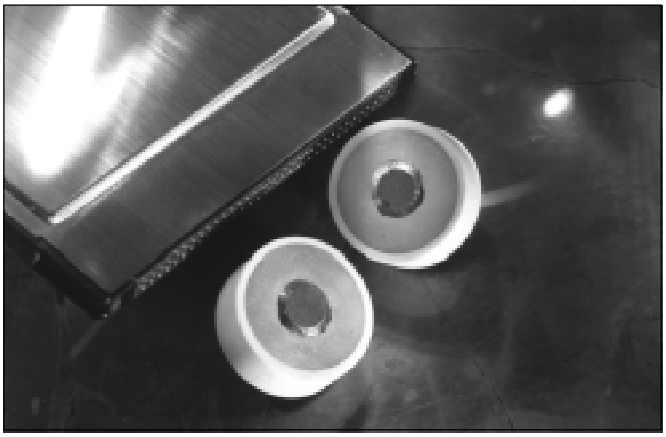

FEATURES

- Vertical Polarization reception
- Low profile (6.5mm max)
- Omni-directional in azimuth
- Low interference design
- Central feeding point terminal
- Wide bandwidth
- Light weight

SPECIFICATIONS

Part Number	DAC2450CT1
Center Frequency	2450 MHz
Receiving Bandwidth	±50 MHz min.
Impedance	50Ω
Peak Gain	2.15 dBi (0dBi typ.) max.
Operating Temperature	-10 ~ +60° C
Storage Temperature	-20 ~ +85° C
Weight	4g

DIMENSIONS

DAC SERIES

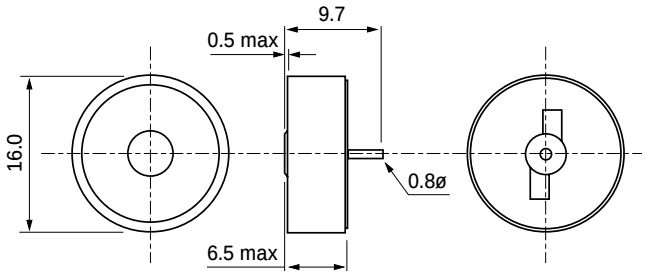

Unit: mm

Mounted with Ground Plane

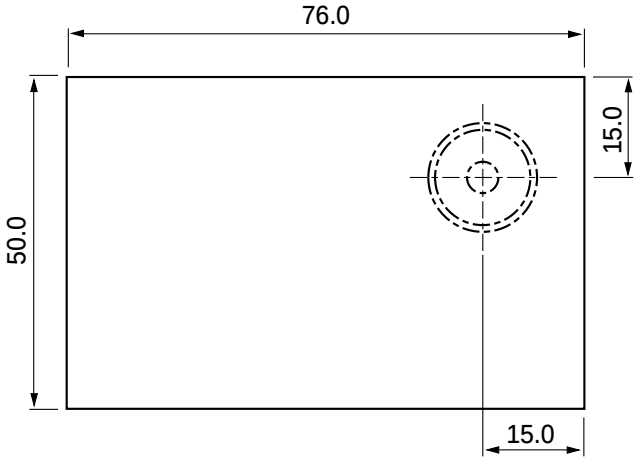

DAC Series

TYPICAL CHARACTERISTICS

Receiving Signal Response vs Frequency

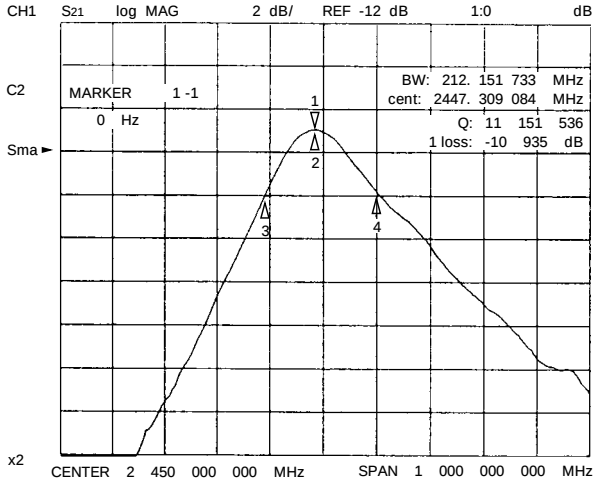

Return Loss

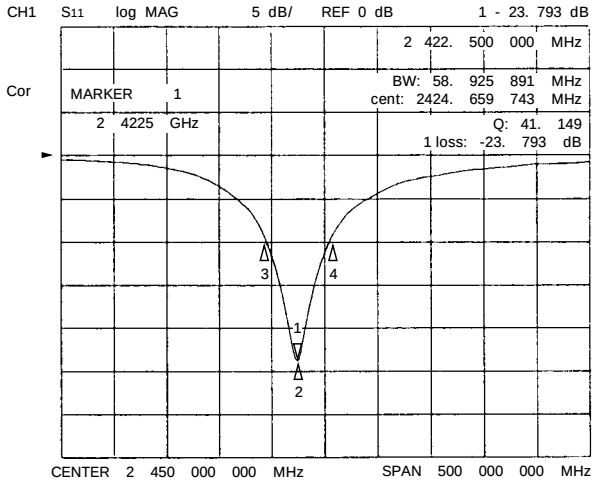

Smith Impedance

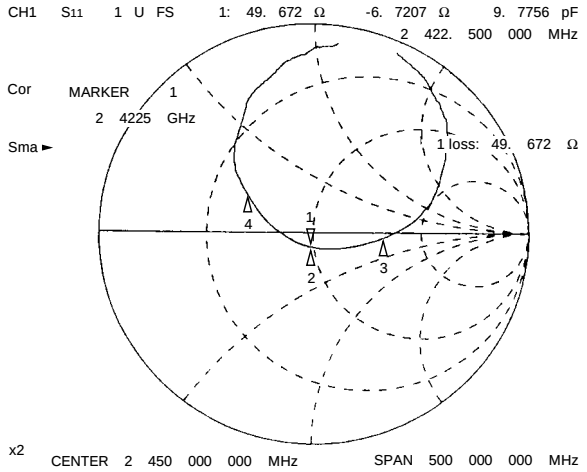

DIRECTIVITY CHART

Horizontal Pattern

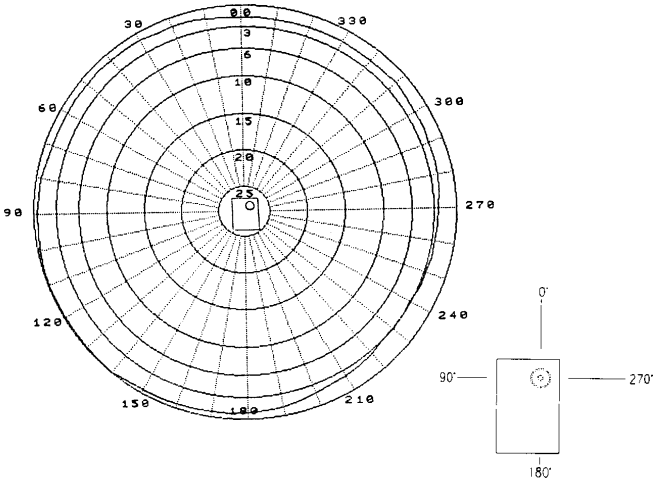

Vertical Pattern

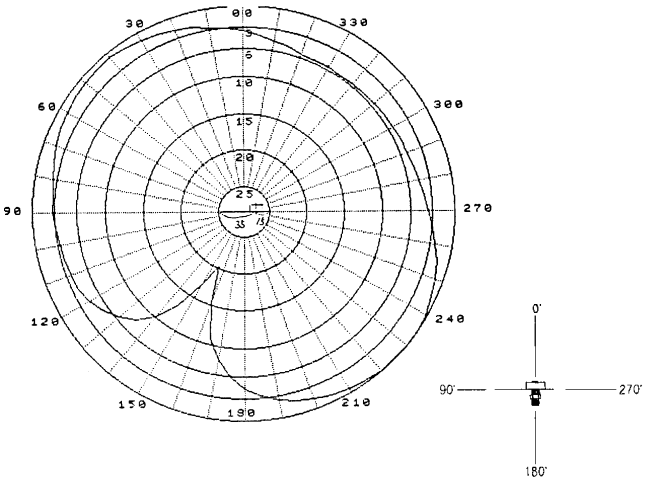

Vertical Pattern

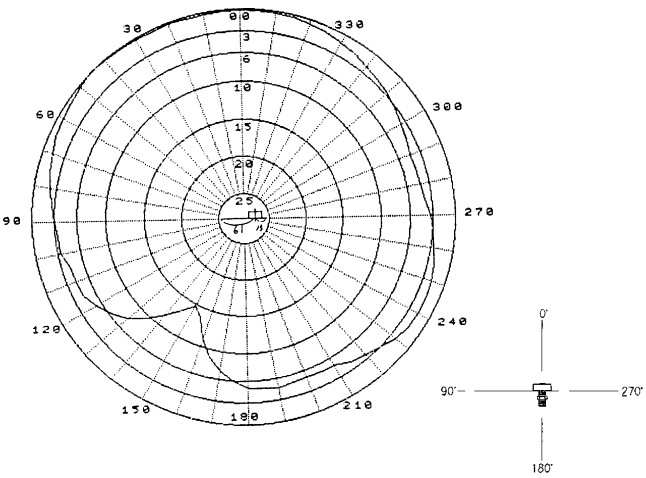

INTERFERENCE COMPARISON OF DAC VS. PLANAR INVERTED F ANTENNA

DAC Set-up

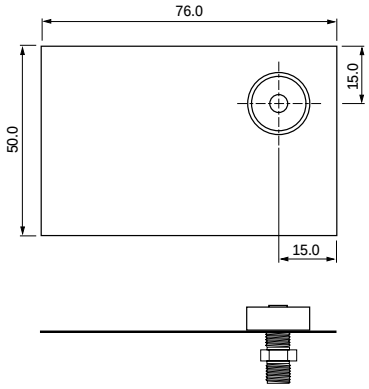

Planar F Inverted Set-up

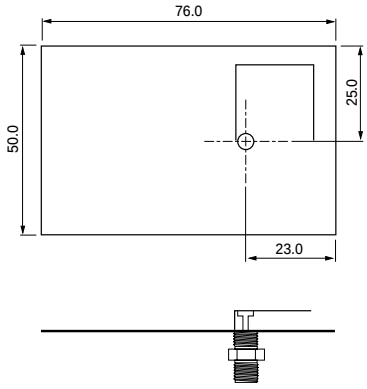

Fig.1

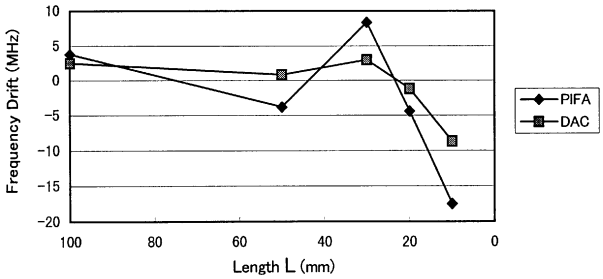

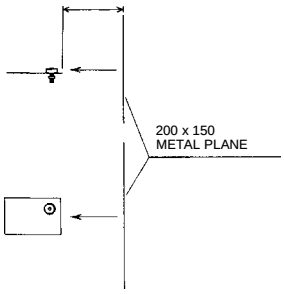

Fig.2

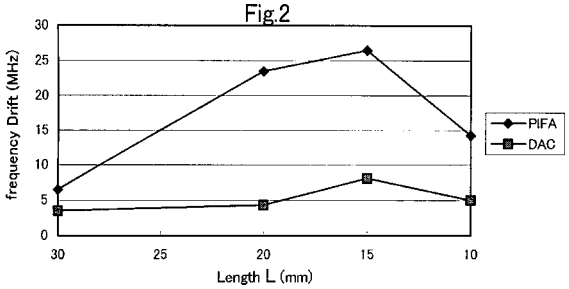

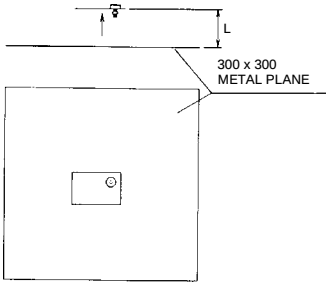

Fig.3

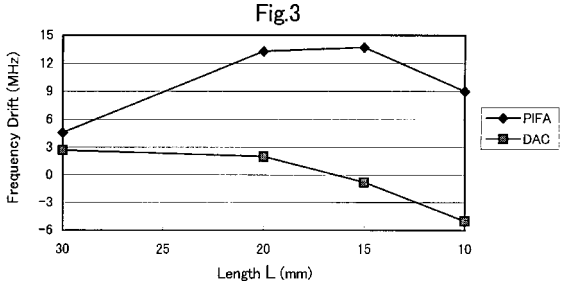

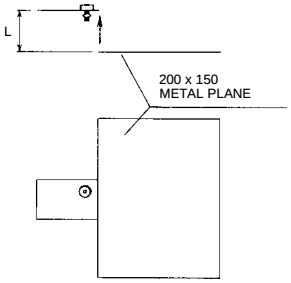

Fig.4

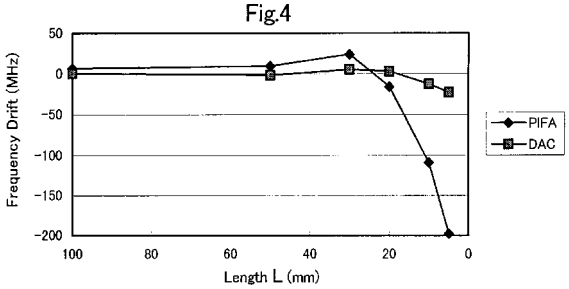

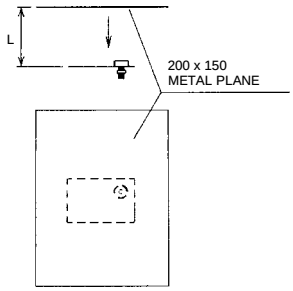

DAC Series

TYPICAL APPLICATION
MOUNTED IN PCMCIA TYPE II EXTENDED CARD

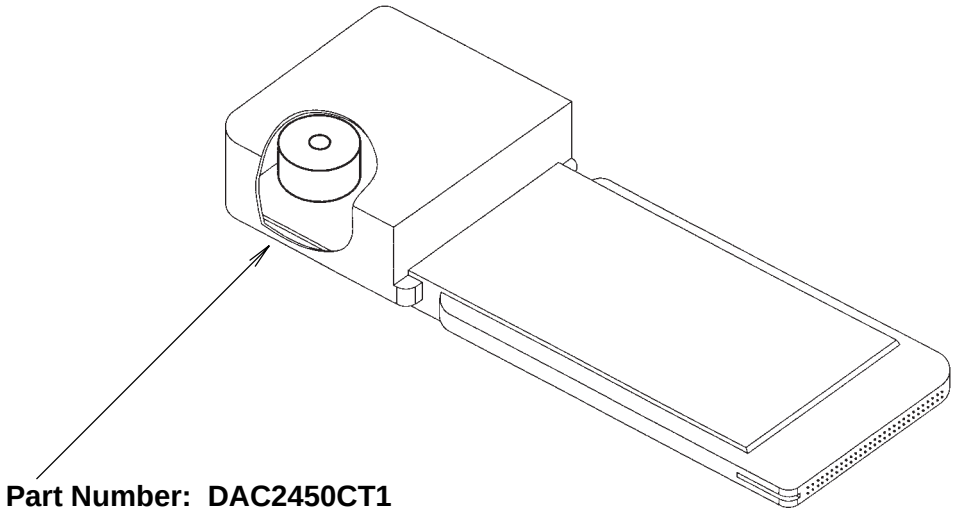

Part Number: DAC2450CT1

TYPICAL MOUNTING TO PRINTED CIRCUIT BOARD

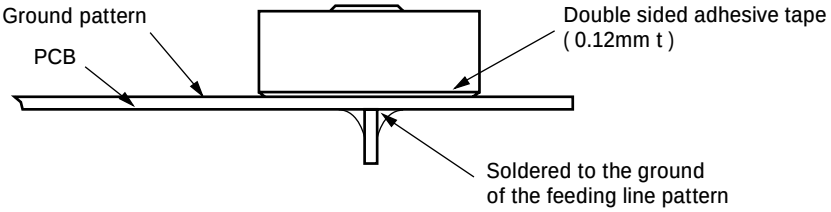

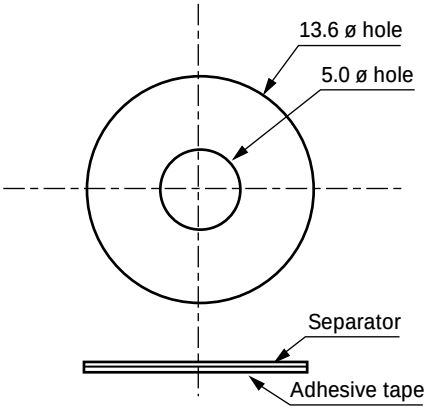

Notes:
- Fix the antenna element on PCB using double sided adhesive tape of 0.12mm thickness. (Recommend No. 5015 : NITTO DENKO CORP.)
- Solder the antenna terminal pin on the bottom side of PCB to the ground of the feeding line patten.
- The terminal pin should be separated from the ground pattern.

Unit: mm
Material: Nitto N5015

The information furnished by TOKO, Inc. is believed to be accurate and reliable. However, TOKO reserves the right to make changes or improvements in the design, specification or manufacture of its products without further notice. TOKO does not assume any liability arising from the application or use of any product or circuit described herein, nor for any infringements of patents or other rights of third parties which may result from the use of its products. No license is granted by implication or otherwise under any patent or patent rights of TOKO, Inc.

Toko America, Inc.
1250 Feehanville Drive, Mt. Prospect, IL 60056
Tel: (847) 297-0070 Fax: (847) 699-7864 Web: http://www.tokoam.com

TOKO SALES LOCATIONS

Midwest Regional Office
Toko America, Inc.
1250 Feehanville Drive
Mount Prospect, IL 60056
Tel: (847) 297-0070
Fax: (847) 699-7864

Western Regional Office
Toko America, Inc.
2480 North First Street , Suite 260
San Jose, CA 95131
Tel: (408) 432-8281
Fax: (408) 943-9790

Eastern Regional Office
Toko America, Inc.
107 Mill Plain Road
Danbury, CT 06811
Tel: (203)748-6871
Fax: (203)797-1223

© 1997 Toko, Inc.
All Rights Reserved

CF-162-DACDS297
0397O2.0K

Printed in the USA

Vocollect Antenna

The **Vocollect** antenna is 2 dBi omni-directional in azimuth plane. It is mounted internally as shown in the attached photo. The **Vocollect** uses either a Murata Erie BFA or a MMCX connector. In its use it would be within 5 cm of a persons body. It is used in portable devices. This antenna / device combination was SAR tested and results filed with a Class II permissive change for the H9PLA3020. The antenna was driven by 240 mW of transmitter power. This produces an EIRP limit of 380 mW.

Location	Body worn device
Pattern	Omni
Type	Dipole
Max Gain	2 dBi
Physical	See attached dwg
Cable	MXYH75, RG-178
Symbol P/N	50-21900-025, 50-21900-026

Note: This antanna / terminal configuration is only to be used with a transmitter that produces an EIRP of less than 380 mW. For an EIRP of more than 380 mW a SAR test must be performed.

Antenna Photo

Talkman Open – 2.4 GHz Symbol Radio Information

Vocollect Antenna Specifications

Type:	Dipole
Gain:	2 dBi
Polarization:	Circular
Physical description:	Implemented on flat and rigid printed circuit board, internally mounted, parallel to the belt mounting loop.
Min distance from skin:	2.1 inches (1.70 inches to inside to belt loop plus 0.40 inches of padded belt)

Table 1: Bill of Materials- Talkman Open – Symbol Radio and Antenna

Item	Qty	Vocollect Part #	Vendor Part #	Supplier	Description
1	1	656022		Austin Antenna	ANTENNA PCB
2	1	606012	90174601	Huber-Suhner	CABLE ASSY, ANTENNA

Vocollect, Inc. • 701 Rodi Road • Pittsburgh, PA • 15235 • 412-829-8145 • 412-829-0972

Image 1: 2.4 GHz Antenna PC Board

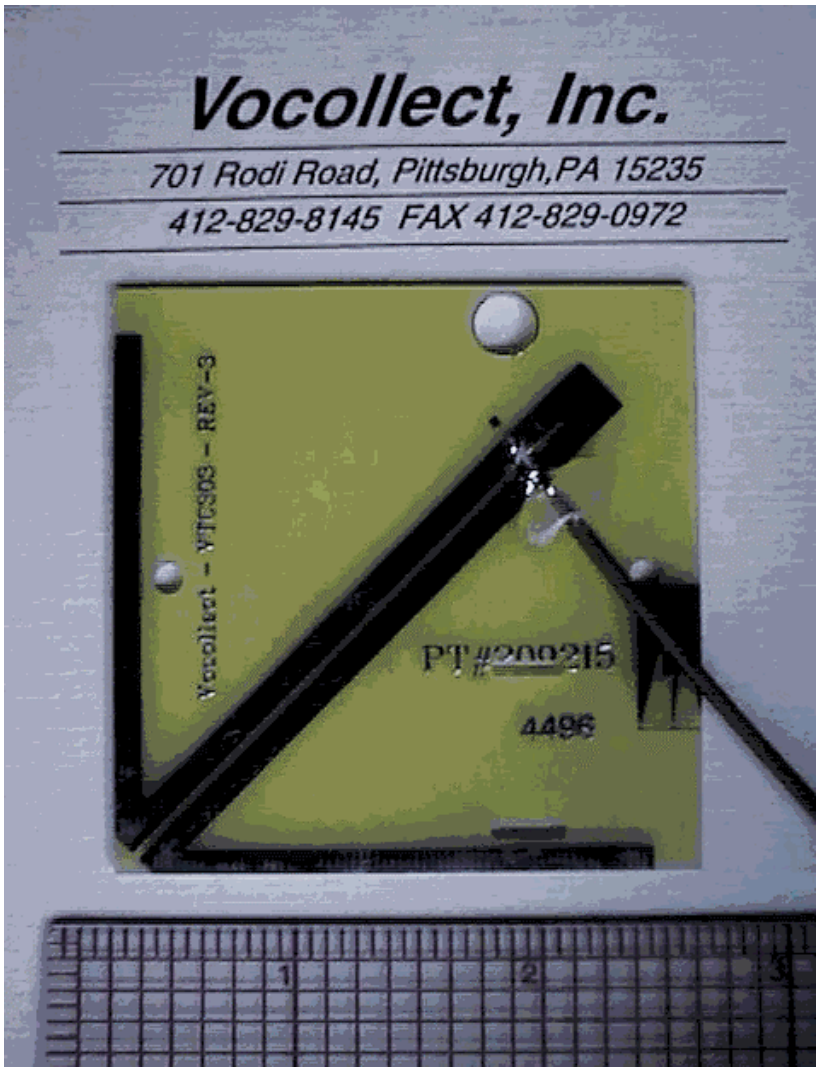

IMAGE 2: Beltworn Terminal - Drawing

IMAGE 3: Beltworn Terminal

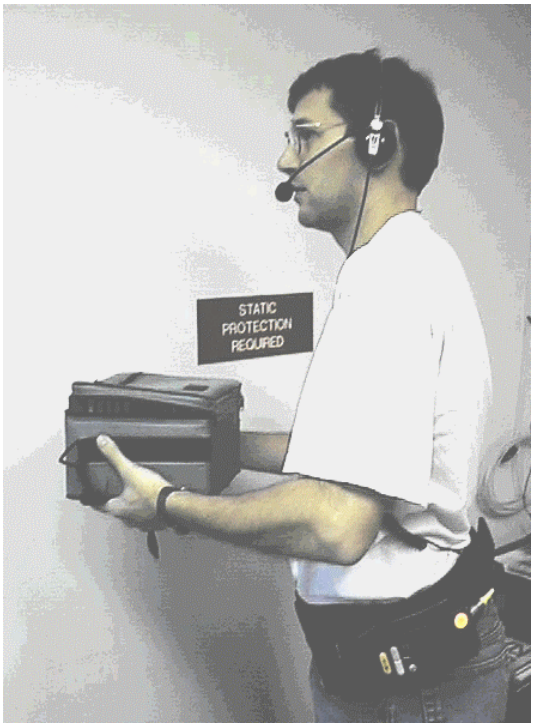

IMAGE 4: Drawing of Antenna Placement Inside Unit.

The antenna is mounted in the plane parallel to the belt loop and waist, 1.70 inches away from the belt loop used to connect the terminal to the padded mounting belt. Including the belt thickness, the radio is at least 2.1 inches distant from the skin.

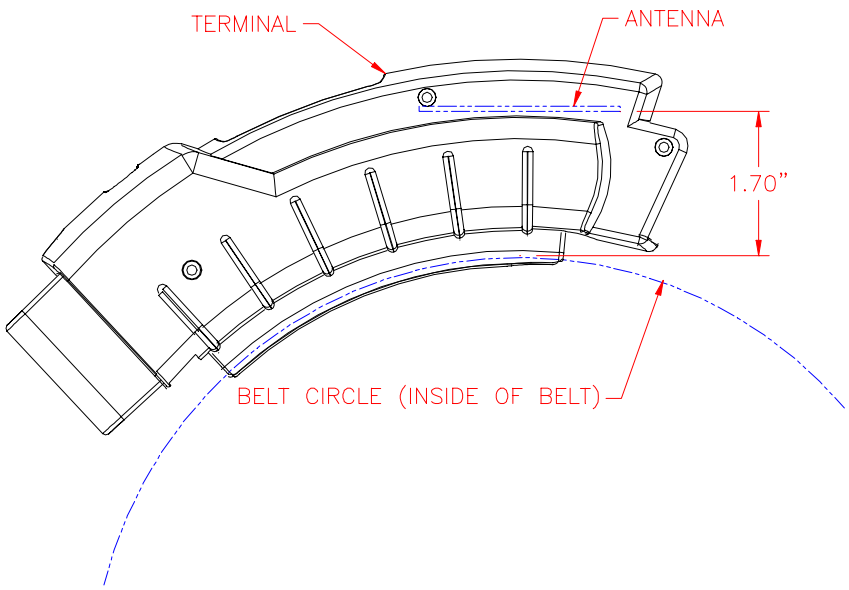

IMAGE 5: The unit mounts on a padded belt ½" thick.

The unit is connected to the belt be a secondary strap secured to the belt. The full width of the main padded belt remains between the terminal and user's body.

6840/ 6846 Antenna

Location	Hand Held Device
Pattern	Omni
Type	F-Element
Max Gain	0 dBi
Physical	See attached dwg
Cable	MXYH75, RG-178
Symbol P/N	10-32290-01, -02

The **6840** antenna is 0 dBi omni-directional in azimuth plane. It is mounted internally on the top end of the terminal as shown in the attached photo. The **6840** uses a Murata Erie BFA connector while the **6846** uses the MMCX. In its use it would be within 20 cm of a persons hand but more than 20 cm from the users body. It is used in portable devices. The following RF exposure information is included in a prominent place in the device's user manual to inform the user of safety issues as required by OET Bulletin 65, Supplement C for EIRP greater than 200 mW.

"Important Note: To comply with FCC RF exposure requirements, this hand-held device is approved for operation in a user's hand when there is 20 cm or more between the antenna and everyone's body."

Antenna Installed in Device

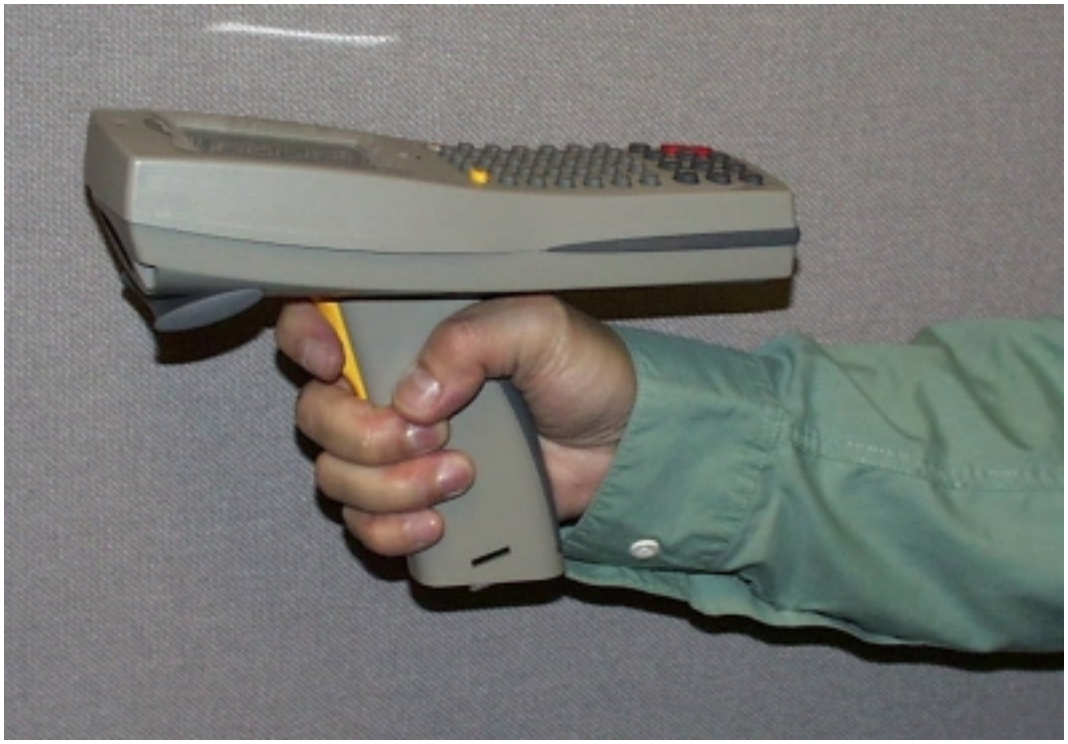

Terminal Use Photo

REVISIONS							
REV.	ZONE	No.	DESCRIPTION	E.C.	BY	APVD.	DATE
A	ALL	~	RELEASED PER EDR 39215	~	LM		
B	~	~	REVISED PER ECN	4418	RM		
C	~	~	DIM 2.37 WAS 2.30	E4874	LM		
D	~	~	ADDED DIM 2X.18 PER EC	E5856	MB		

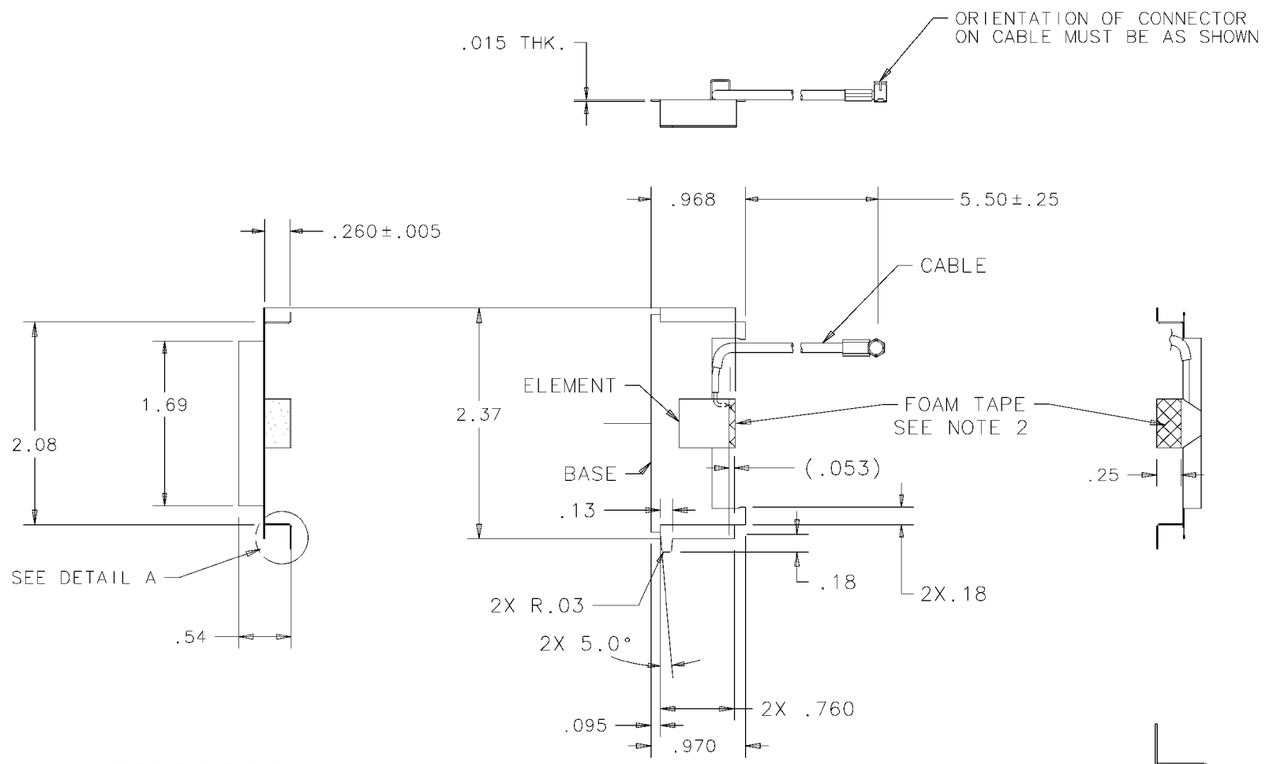

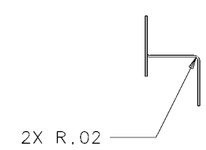

DETAIL A
(2 PL)

SPECIFICATIONS

FREQUENCY: _____ 2.4 TO 2.485 GHz

VSWR: _____ 2.0:1
GAIN _____ 0 dBi NOM

IMPEDANCE: _____ 50 OHMS

CABLE/CONNECTOR:_____ TECOM 817283-X
MURATA ERIE
MXYH62-XX-XXXX

NOTE:

1. PACKAGE ITEMS IN ACCORDANCE WITH STI GENERAL PACKAGING SPEC 50-04100-013.
2. ADHESIVE TO BE 3M DOUBLE-SIDED SCOTCH 4026 URETHANE FOAM TAPE(.062 THICK) WITH POLY COATED LINER OR EQUIVALENT.

ITEM	QTY.	PART NO.	DESCRIPTION	REMARKS/REF. SYMBOL

NEXT ASSY	USED ON

THE DWG. & SPECIFICATION CONTAINED HEREON ARE PROPRIETARY AND MUST NOT BE USED, COPIED, REPRODUCED NOR ITS CONTENTS COMMUNICATED TO OTHERS EXCEPT IN ACCORDANCE WITH WRITTEN INSTRUCTIONS RECEIVED FROM SYMBOL TECHNOLOGIES INC.

DO NOT SCALE DRAWING

DIMENSIONS ARE IN INCHES UNLESS OTHERWISE SPECIFIED

	MM	INCH
.XX	+/-	+/- .01
.XXX	+/-	+/- .005

ANGLES ± 1° FRACTIONS ± 1/64

MATERIAL: SEE NOTE

FINISH: SEE NOTE

APPROVALS		DATE
DRAWN	LJM	12/23/97
CHECKED	J CHAN	
ENGINEER	J CHAN	
MFG. ENG	S SPITERI	
PRODUCT	M SAVONA	
QUALITY		

SYMBOL TECHNOLOGIES INC.
Bohemia, New York

ANTENNA:2.4 GHZ

SIZE	DWG. NO.	REV.
C	10-32290-01	D

SCALE: FULL | SOLID MODEL YES NO | SHEET 1 OF 1

REVISIONS							
REV.	ZONE	No.	DESCRIPTION	E.C.	BY	APVD.	DATE
A			RELEASED PER EDR #53958		MB		01/27/00

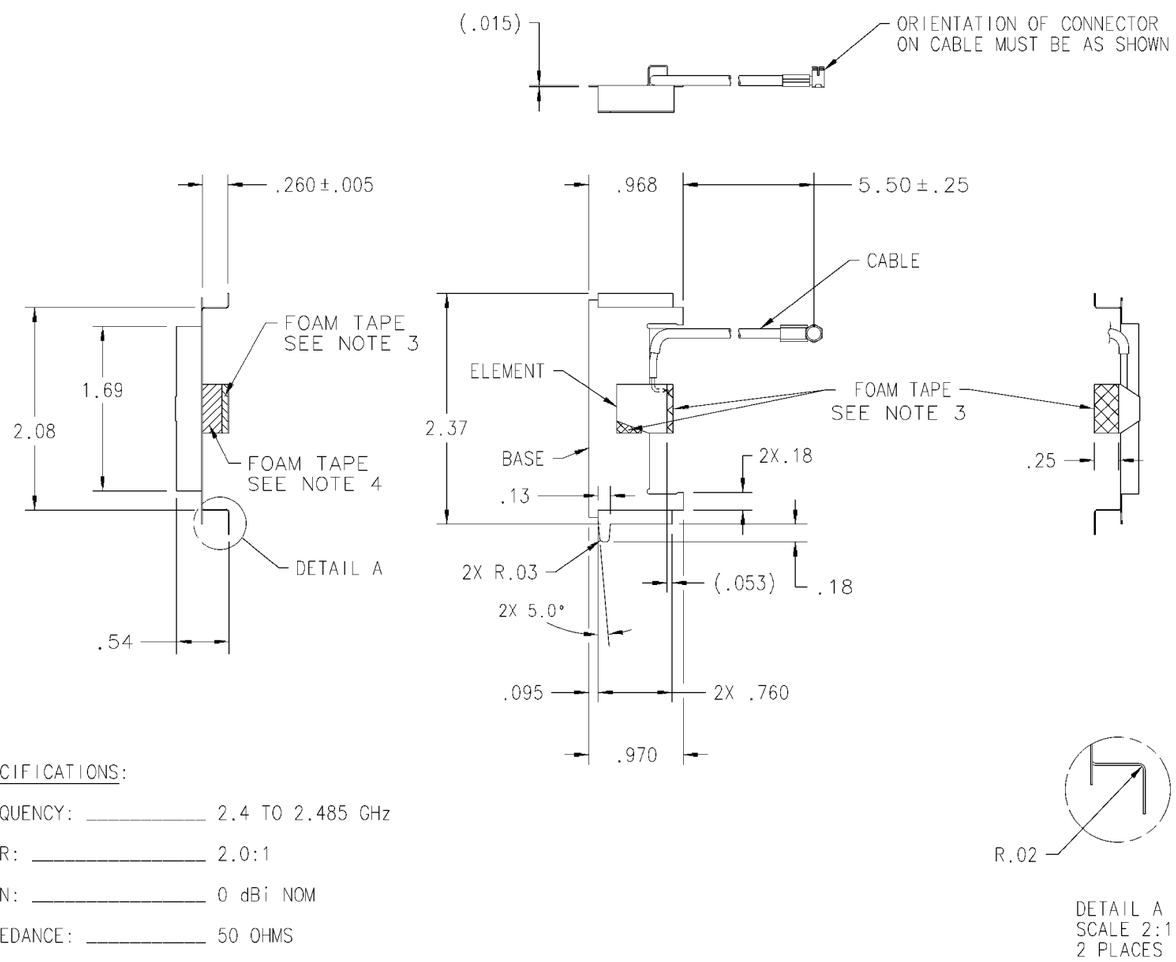

SPECIFICATIONS:

FREQUENCY: _____ 2.4 TO 2.485 GHz

VSWR: _____ 2.0:1

GAIN: _____ 0 dBi NOM

IMPEDANCE: _____ 50 OHMS

CABLE/CONNECTOR:_____ RG178
50-22100-029 (MMCX)

NOTES: UNLESS OTHERWISE SPECIFIED.

1) MATERIAL: CRS 1008, .015 ±.001 THICK

2) FINISH: BRIGHT TIN PLATE PER MIL-T-10727A, TYPE 1
ELECTRO DEPOSITED .00010-.00025 INCHES.
FINISH SHALL BE UNIFORM AND EXHIBIT NO EVIDENCE OF CORROSION OR OXIDATION WHEN VIEWED WITH THE UNAIDED EYE. EDGE PLATING ON CUT OR SHEARED SURFACES IS NOT REQUIRED.

3) FOAM TAPE TO BE 3M DOUBLE-SIDED SCOTCH 4026 (.062 THICK) WITH POLY COATED LINER OR EQUIVALENT.

4) FOAM TAPE TO BE DOUBLE-SIDED SCOTCH 4008 (.125 THICK) WITH POLY COATED LINER OR EQUIVALENT.

5) PARTS SHALL MEET THE CRITERIA PER STI WORKMANSHIP STANDARD SS-03800-57.

6) PACKAGE ITEMS IN ACCORDANCE WITH STI GENERAL PACKAGING SPEC #50-04100-013.

* PROPRIETARY CONTENT *
THE DRAWING CONTENT AND SPECIFICATION CONTAINED HEREIN ARE PROPRITARY AND MUST NOT BE USED, COPIED, REPRODUCED OR OTHERWISED DEALT WITH OR COMMUNICATED TO OTHERS EXCEPT IN ACCORDANCE WITH WRITTEN INSTRUCTIONS RECEIVED FROM:
SYMBOL TECHNOLOGIES INC

COMPUTER GENERATED DRAWING DO NOT SCALE

TOLERANCE CHART
UNLESS OTHERWISE SPECIFIED
DIMENSIONS ARE IN INCHES

	INCH	MM
.XX	+/- .01	+/- .25
.XXX	+/- .005	+/- .125

ANGLES ± 1° FRACTIONS ± 1/64

APPROVALS		DATE
DRAWN	J.SIMMONS	11/3/99
CHECKED	M.SAVONA	11/3/99
ENGINEER	B.ROSENGRANT	11/3/99
ANALYST	L.DOBKOWSKI	11/3/99
MFG. ENG.		
PRODUCT		
QUALITY		

SYMBOL TECHNOLOGIES INC.
One Symbol Plaza
Holtsville, NY 11742

ANTENNA:2.4 GHZ,MMCX

SIZE C | DWG. NO. 10-32290-02 | REV A

SCALE: 1:1 | SOLID MODEL YES NO ☒ | SHEET 1 OF 1

7546D Antenna

The **7546D** antenna is 0 dBi omni-directional in azimuth plane. It is mounted internally at the far end of the terminal on the bottom side as shown in the attached photo. The **7546D** uses two F-elements for spatial diversity. The **7546D** uses a MMCX connector, In its use it would be within 20 cm of a persons hand but more than 20 cm from the users body. It is used in portable devices. The following RF exposure information is included in a prominent place in the device's user manual to inform the user of safety issues as required by OET Bulletin 65, Supplement C for EIRP greater than 200 mW.

Location	Hand Held Device
Pattern	Omni
Type	F-Element
Max Gain	0 dBi
Physical	See attached dwg
Cable	RG-178
Symbol P/N	10-40948-01

"Important Note: To comply with FCC RF exposure requirements, this hand-held device is approved for operation in a user's hand when there is 20 cm or more between the antenna and everyone's body."

Antenna Installed in Device

Terminal Use Photo

REVISIONS							
REV.	ZONE	No.	DESCRIPTION	E.C.	BY	APVD.	DATE
1			INITIAL RELEASE PER PPD #54570		JS		2/15/00

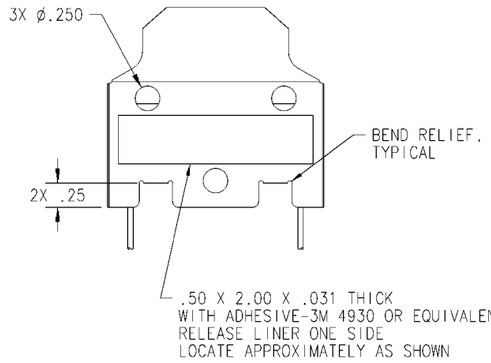

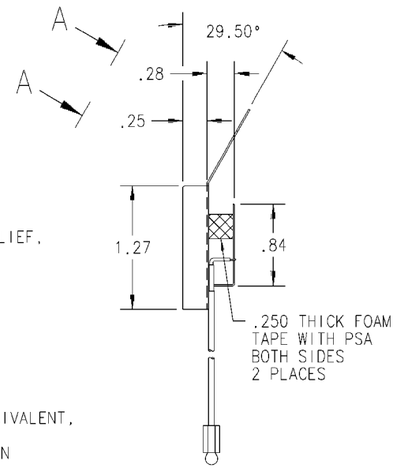

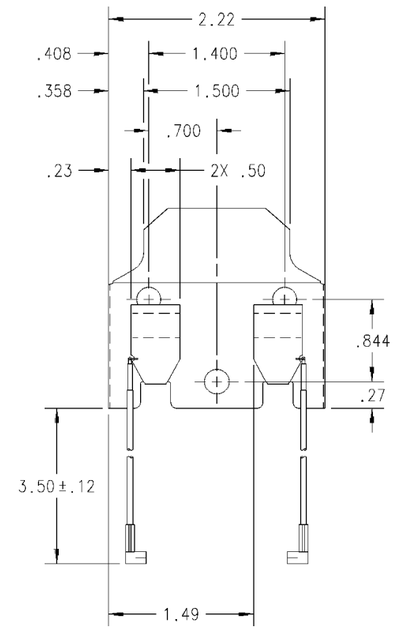

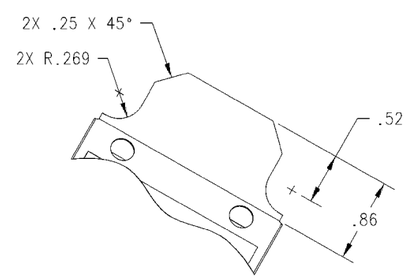

AUX VIEW A-A
SCALE 1:1

SPECIFICATIONS:

FREQUENCY:	2.4-2.485 GHZ
VSWR:	2.0:1 MAX
GAIN:	0dBi NOMINAL
POLARIZATION:	LINEAR
CABLE:	RG178
CONNECTOR:	TYPE MMCX,50-22100-029

NOTES: UNLESS OTHERWISE SPECIFIED.

1. MATERIAL: CRS 1008, .015±.001 THICK.
2. ALTERNATE MATERIAL: ELECTROLYTIC TIN PLATED STEEL .015±.001 THICK. EDGE PLATING ON CUT OR SHEARED SURFACES IS NOT REQUIRED.
2. FINISH: BRIGHT TIN PLATE PER MIL-T-10727A, TYPE 1, ELECTRO DEPOSITED .00010-.00025 INCHES. FINISH SHALL BE UNIFORM AND EXHIBIT NO EVIDENCE OF CORROSION OR OXIDATION WHEN VIEWED WITH THE UN-AIDED EYE.
3. PACKAGE IAW STI GENERAL PACKAGING SPECIFICATION #50-04100-013.
4. BREAK AND DEBUR ALL SHARP EDGES .005 MAX PRIOR TO PLATING.
5. PART SHALL MEET THE CRITERIA PER STI WORKMANSHIP STANDARD #SS-03800-57.

PROPRIETARY CONTENT

THE DRAWING CONTENT AND SPECIFICATIONS CONTAINED HEREIN ARE PROPRIETARY AND MUST NOT BE USED, COPIED, REPRODUCED OR OTHERWISE DEALT WITH OR COMMUNICATED TO OTHERS EXCEPT IN ACCORDANCE WITH WRITTEN INSTRUCTIONS RECEIVED FROM SYMBOL TECHNOLOGIES, INC.

COMPUTER GENERATED DRAWING DO NOT SCALE

TOLERANCE CHART

UNLESS OTHERWISE SPECIFIED: DIMENSIONS ARE IN INCHES

	INCH	MM
.XX	+/- .03	
.XXX	+/- .010	

ANGLES ± 1° FRACTIONS ± 1/64

APPROVALS		DATE
DRAWN	J.SIMMONS	2/15/00
CHECKED	M.SAVONA	2/15/00
ENG.	B.ROSENGRANT	2/15/00
ANALYST	L.DOBKOWSKI	2/15/00
MFG. ENG.		
PRODUCT		
QUALITY		

SYMBOL TECHNOLOGIES, INC.
One Symbol Plaza
Holtsville, NY 11742

ANTENNA: 2.4 GHZ, TYPE F, DIVERSITY

SIZE	DWG. NO.	REV
C	10-40948-01	1

SCALE: 1:1 SOLID MODEL YES ☒ NO ☐ SHEET 1 OF 1

1740 / 1742 Antenna

The **1740** antenna is 0 dBi omni-directional in azimuth plane. It is mounted internally on the top end of the terminal as shown in the attached photo. In its use it would be within 20 cm of a persons hand but more than 20 cm from the users body. It is used in portable devices. The **1742** uses the MMCX connector instead of the MuRata BFA. The following RF exposure information is included in a prominent place in the device's user manual to inform the user of safety issues as required by OET Bulletin 65, Supplement C for EIRP greater than 200 mW.

Location	Hand Held Device
Pattern	Omni
Type	F-Element
Max Gain	0 dBi
Physical	See attached dwg
Cable	MXYH75, RG-178
Symbol P/N	703549-1

"Important Note: To comply with FCC RF exposure requirements, this hand-held device is approved for operation in a user's hand when there is 20 cm or more between the antenna and everyone's body."

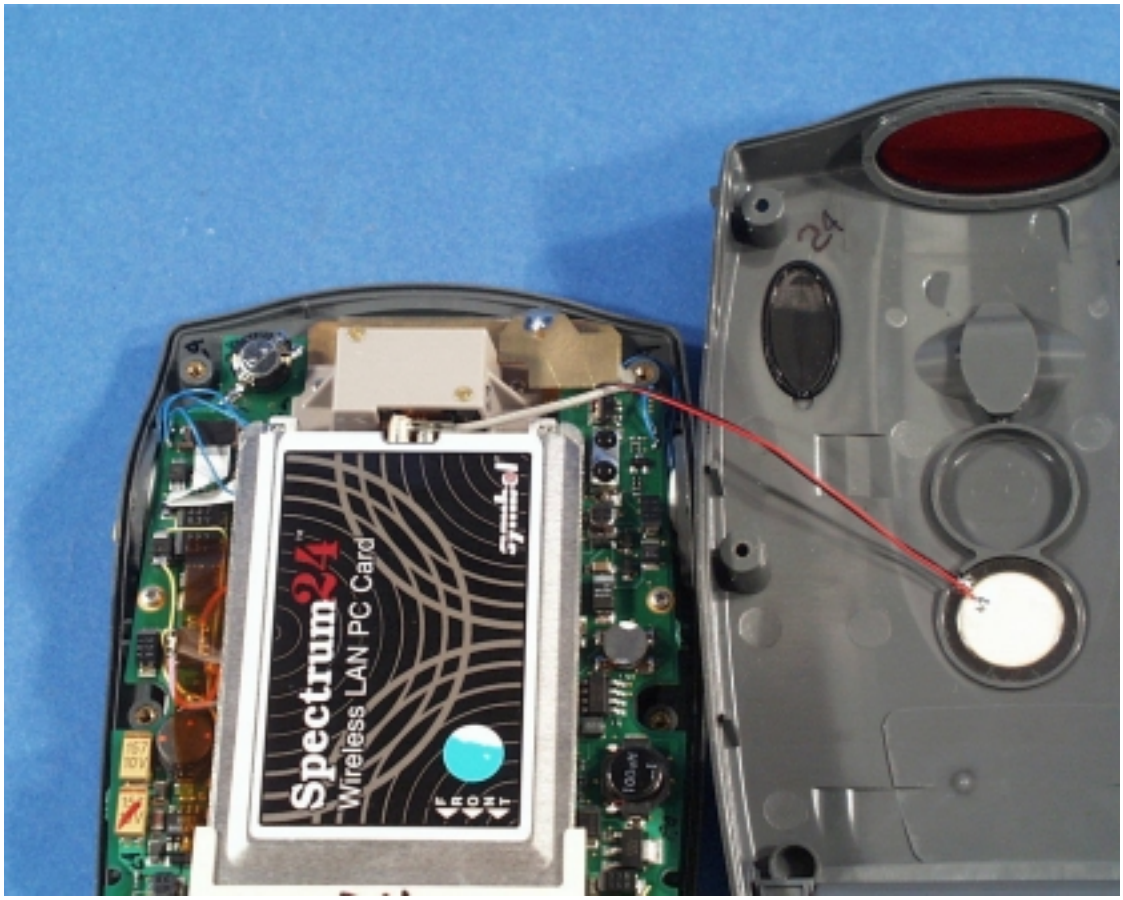

Antenna Installed in Device

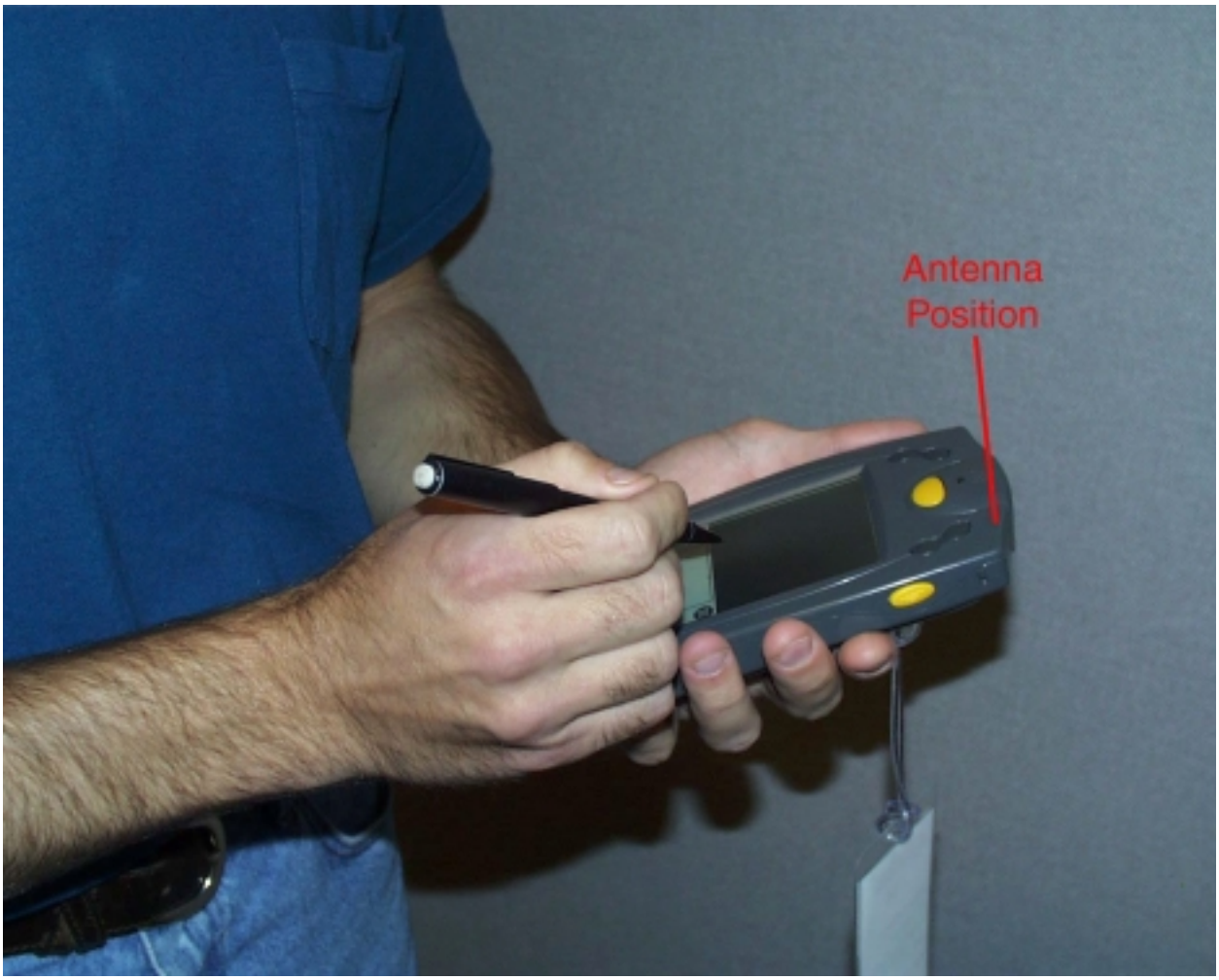

Terminal Use Photo

TECOM PROPRIETARY:
INFORMATION CONTAINED HEREIN SHALL NOT BE DISCLOSED TO
A THIRD PARTY WITHOUT WRITTEN PERMISSION FROM TECOM.

REVISIONS

ZONE	LTR	DESCRIPTION	DATE	APPROVED
.	B	1.16±.12 WAS 2.06±.12. .63 WAS .750 ADDED .71, 41, .20. CHANGED PICTORIALLY. REDRAWN. WO 2357, 2372	3-26-99 JL	BI MMZ JK
4C-D	C	ADDED .38, R.09. NOTCH WAS .06 (IS .13). WO CP90-476	6-10-99 Hvan	BI JK
.	D	DELETED .38, R .09 NOTCH ADDED .06 & .50 3X .06 X 45° WAS 2X ... ADDED .18 MIN, .19 MIN ADDED " NO SOLDER CALLOUT" UPDATED NOTES REDRAWN	7-23-99 JL	
B4	E	ADDED -2 CONFIG & TAB. BLOCK CALLOUT WAS: CONNECTOR, MURATA TYPE BFA WO CP90-924	12-8-99 JL	

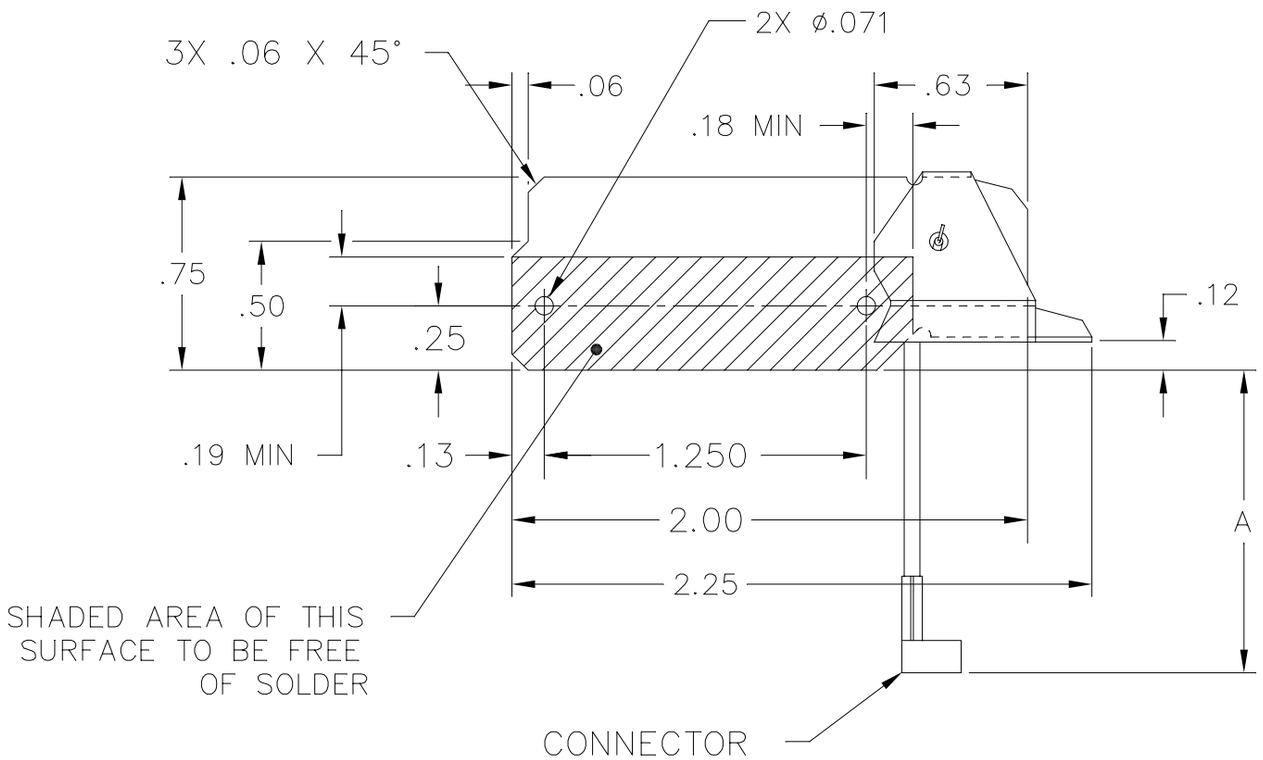

-2	MMCX MALE RT ANGLE	1.85±.12	E
-1	MURATA TYPE BFA	1.16±.12	D
DASH NO	CONNECTOR	A	REV

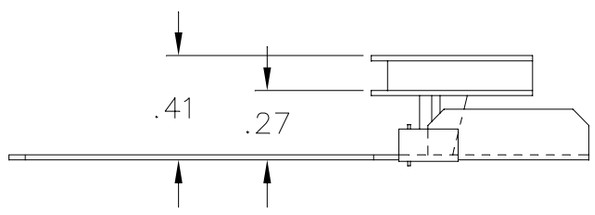

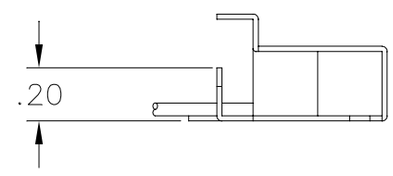

SPECIFICATIONS

FREQUENCY: _____ 2.4-2.485 GHZ
VSWR: _____ 2.0:1 MAX
GAIN: _____ 0dBi NOMINAL
POLARIZATION: _____ LINEAR

5. TOLERANCES ON: .XX ±.03, .XXX ±.010, ANGLES ±.5°

4. SHARP CORNERS & EDGES .005 MAX.

3. FINISH SHALL BE UNIFORM AND EXHIBIT NO EVIDENCE OF CORROSION OR OXIDATION WHEN VIEWED WITH THE UNAIDED EYE. EDGE PLATING ON CUT OR SHEARED SURFACES IS NOT REQUIRED.

2. ALTERNATE:
MATERIAL: CRS 1008, .010 THK.
FINISH: BRIGHT TIN PLATE PER MIL-T-10727A, TYPE 1, ELECTRO DEPOSITED .00010-.00025 IN.

1. MATERIAL: ELECTROLYTIC TIN PLATED STEEL SHEET, .010 THK.

NOTES : UNLESS OTHERWISE SPECIFIED

.500
SCALE

PMIC	
	(10-36063-01)
	(DRAGON)
822903	CP80-875
NEXT ASSY	USED ON
APPLICATION	

UNLESS OTHERWISE SPECIFIED:
DIMENSIONS ARE IN INCHES.
TOLERANCES: .XX ± .03
.XXX ± .010 ANGLES ± 0°30'
MACHINED SURFACE ROUGHNESS 125√
REMOVE BURRS, SHARP EDGES R.005–.015
MACHINED FILLETS R.005–.015
DIMENSIONS ARE AFTER PLATING.
MACHINED DIA'S ON COMMON CENTERLINE
CONCENTRIC WITHIN .005 TIR.
INTERPRET PER ANSI Y14.5M–1982.

HOLE TOLERANCES:

.040 – .128	+.003 −.001	.515 – .750	+.008 −.001
.136 – .228	+.004 −.001	.765 – 1.000	+.010 −.002
.234 – .500	+.006 −.001	1.031 UP	+.015 −.002

MATL ENGR | APPROVAL

CONTRACT NUMBER
CONTRACTOR

DRAWN BY J. LOWE	DATE 1-15-99
CHECKER	MFG ENGR
QA	ENGR BI
PRGM MGR	ENGR

TECOM INDUSTRIES INC.
9324 TOPANGA CYN BLVD CHATSWORTH, CA. 91311
TECHNICAL EXCELLENCE COMMITTED TO QUALITY

TITLE
ANTENNA, 2.4 GHZ

SIZE	CAGE CODE	DWG NO
C	52791	703549

SCALE 2/1 | UNIT WT . | SHEET 1 OF 1

Oneil BFA / Oneil MMCX Antenna

The **Oneil** antenna is 0 dBi omni-directional in azimuth plane. It is available with eirher a MuRatta BFA or MMCX connector. It is mounted as an internal antenna on the O'Neil MicroFlash series of portable belt worn printers. In its use it would be within 5 cm of a users body. It is used in portable devices.

Location	Body worn
Pattern	Omni
Type	Slot
Max Gain	0 dBi
Physical	See attached dwg
Cable	MXYH75 or RG-178
Symbol P/N	50-21900-023 50-21900-031
EIRP	See Summary Tbl

Note: This antenna is only to be used with a transmitter that produces an EIRP of less than 200 mW. For an EIRP of more than 200 mW a SAR test must be performed.

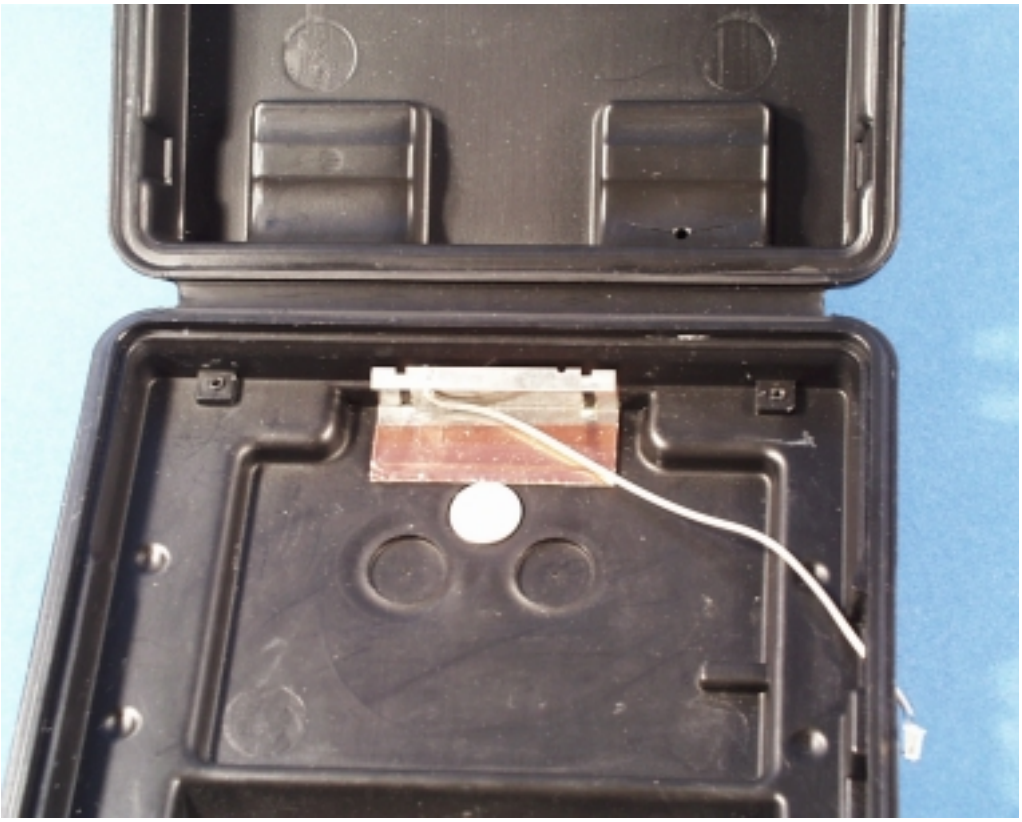

Antenna Installation Photo

Device use Photograph.

TECOM PROPRIETARY: INFORMATION CONTAINED HEREIN SHALL NOT BE DISCLOSED TO A THIRD PARTY WITHOUT WRITTEN PERMISSION FROM TECOM.

REVISIONS

ZONE	LTR	DESCRIPTION	DATE	APPROVED
. C2	A	.58 WAS .42 ADHESIVE CALLOUT WAS: ... X .025 THK (3M 4930 OR EQUIV) WO 2675 REDRAWN	1-4-00 JL	

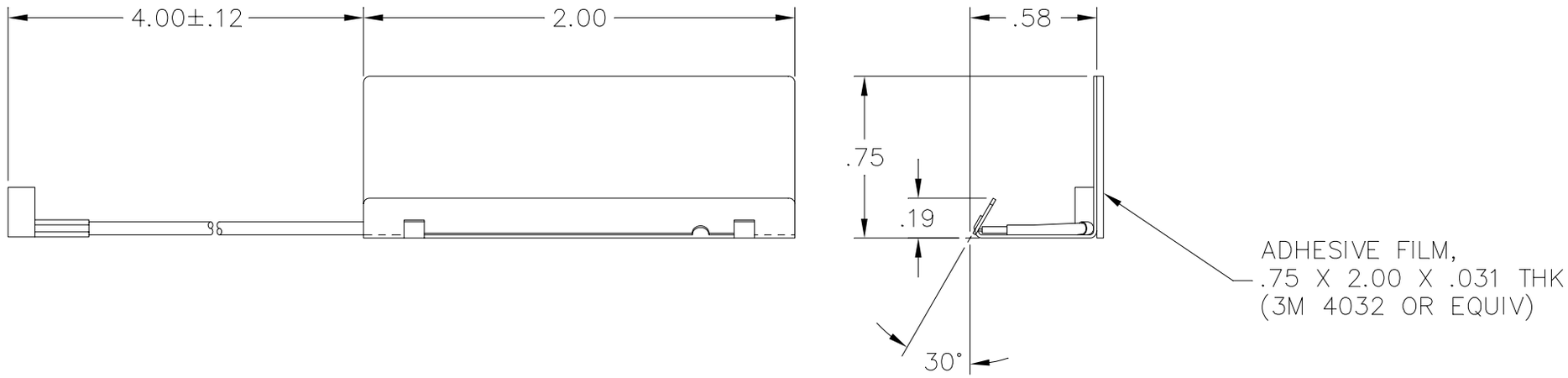

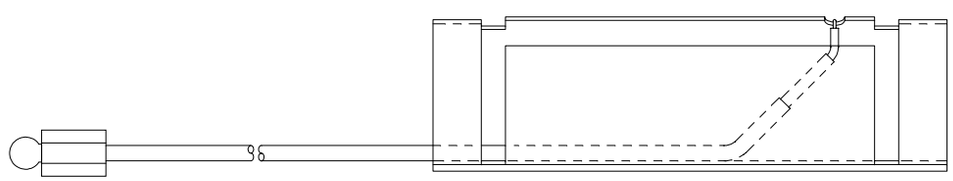

SPECIFICATIONS

FREQUENCY:	2.4-2.485 GHZ
VSWR	2.0:1 MAX
GAIN	0dBi NOMINAL
POLARIZATION	LINEAR
CABLE:	MURATA MXYH75
CONNECTOR:	TYPE BFA

4. SHARP CORNERS & EDGES .005 MAX.

3. FINISH SHALL BE UNIFORM AND EXHIBIT NO EVIDENCE OF CORROSION OR OXIDATION WHEN VIEWED WITH THE UNAIDED EYE. EDGE PLATING ON CUT OR SHEARED SURFACES IS NOT REQUIRED.

2. ALTERNATE:
MATERIAL: CRS 1008, .015 THK.
FINISH: BRIGHT TIN PLATE PER MIL-T-10727A, TYPE 1, ELECTRO DEPOSITED .00010-.00025 IN.

1. MATERIAL: ELECTROLYTIC TIN PLATED STEEL SHEET, .015 THK.

NOTES : UNLESS OTHERWISE SPECIFIED

.500
SCALE

PMIC	
823362	C090-874
NEXT ASSY	USED ON
APPLICATION	

UNLESS OTHERWISE SPECIFIED:
DIMENSIONS ARE IN INCHES.
TOLERANCES: .XX ± .03
.XXX ± .010 ANGLES ± 0°30'
MACHINED SURFACE ROUGHNESS 125✓
REMOVE BURRS, SHARP EDGES R.005–.015
MACHINED FILLETS R.005–.015
DIMENSIONS ARE AFTER PLATING.
MACHINED DIA'S ON COMMON CENTERLINE CONCENTRIC WITHIN .005 TIR.
INTERPRET PER ANSI Y14.5M–1982.

HOLE TOLERANCES:

.040 – .128	+.003 −.001	.515 – .750	+.008 −.001
.136 – .228	+.004 −.001	.765 – 1.000	+.010 −.002
.234 – .500	+.006 −.001	1.031 UP	+.015 −.002

MATL ENGR | APPROVAL

CONTRACT NUMBER

CONTRACTOR

DRAWN BY J. LOWE	DATE 11-8-99
CHECKER	MFG ENGR
QA	ENGR BI
PRGM MGR	ENGR

TECOM INDUSTRIES INC.
9324 TOPANGA CYN BLVD CHATSWORTH, CA. 91311
TECHNICAL EXCELLENCE COMMITTED TO QUALITY

TITLE
ANTENNA, 2.4 GHZ

SIZE	CAGE CODE	DWG NO
C	52791	703620

SCALE 2/1 | UNIT WT . | SHEET 1 OF 1

6846D Antenna

The **6846D** antenna is 0 dBi omni-directional in azimuth plane. It is mounted internally on the top end of the terminal as shown in the attached photo. The **6846D** uses a MMCX connector.. In its use it would be within 20 cm of a persons hand but more than 20 cm from the users body. It is used in portable devices. The following RF exposure information is included in a prominent place in the device's user manual to inform the user of safety issues as required by OET Bulletin 65, Supplement C for EIRP greater than 200 mW.

Location	Hand Held Device
Pattern	Omni
Type	F-Element
Max Gain	0 dBi
Physical	See attached dwg
Cable	MXYH75, RG-178
Symbol P/N	10-41003-01

"Important Note: To comply with FCC RF exposure requirements, this hand-held device is approved for operation in a user's hand when there is 20 cm or more between the antenna and everyone's body."

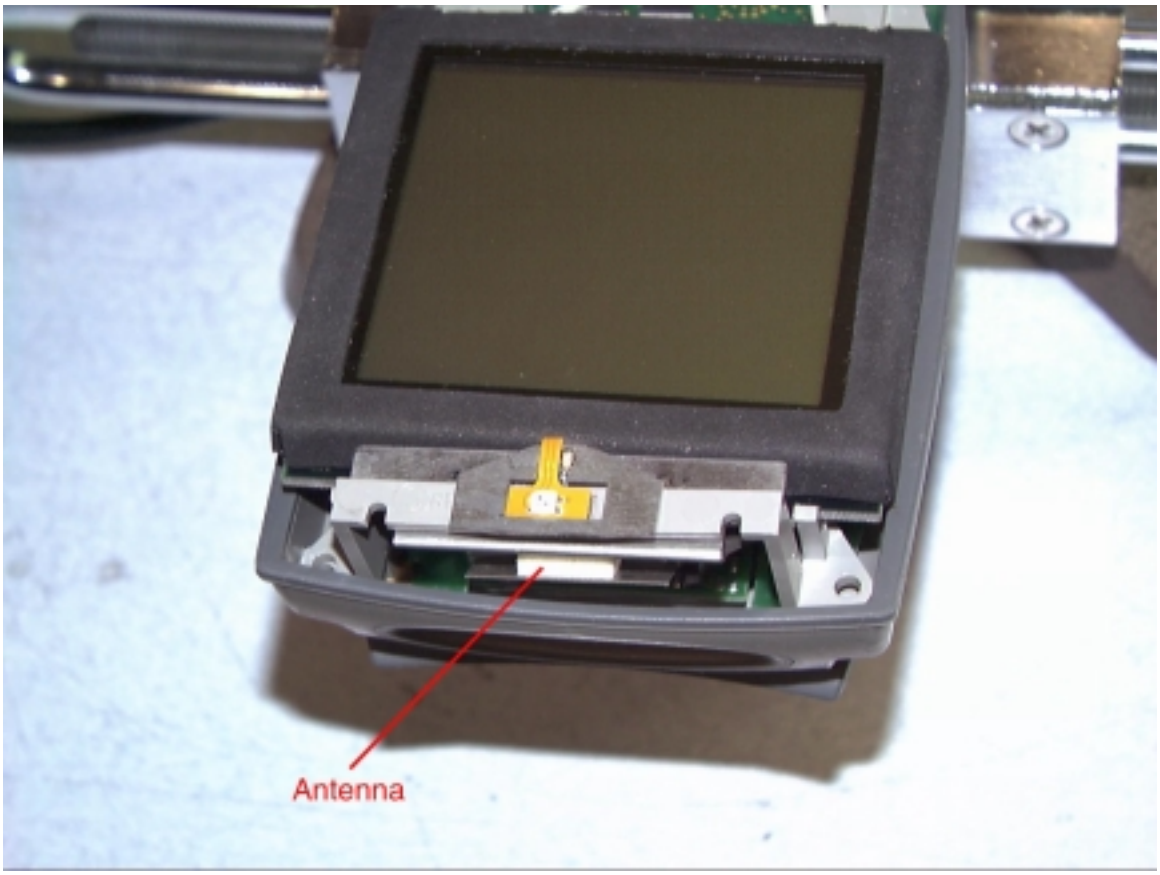

Antenna Installed in Device

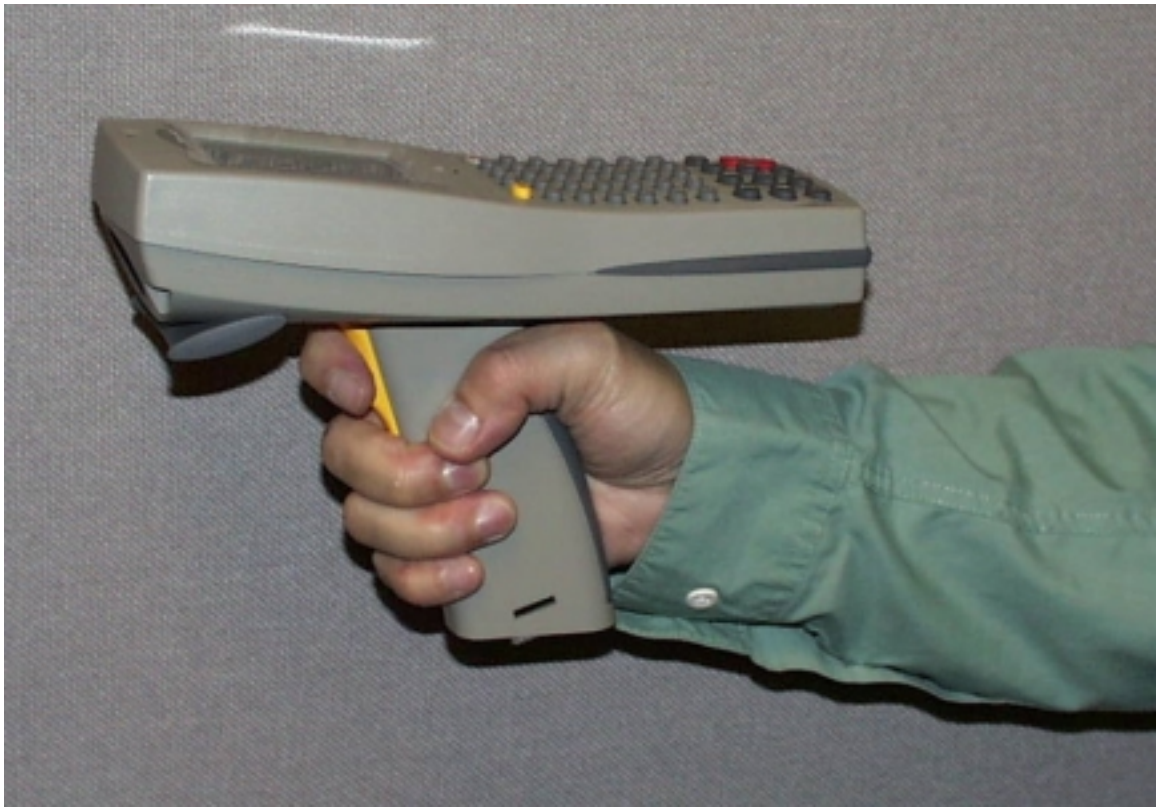

Terminal Use Photo

TECOM PROPRIETARY:
INFORMATION CONTAINED HEREIN SHALL NOT BE DISCLOSED TO A THIRD PARTY WITHOUT WRITTEN PERMISSION FROM TECOM.

PROPOSAL DRAWING

REVISIONS

ZONE	LTR	DESCRIPTION	DATE	APPROVED
.	A	REDESIGNED TO IMPROVE FIT & PERFORMANCE REDRAWN.	2-10-00 JL	
5B,6A	B	.74 WAS .740, .94 WAS .938 1.06 WAS 1.063, .59 WAS .594	2-18-00 JL	
5B	C	1.33 WAS 1.334	2-29-00 JL	

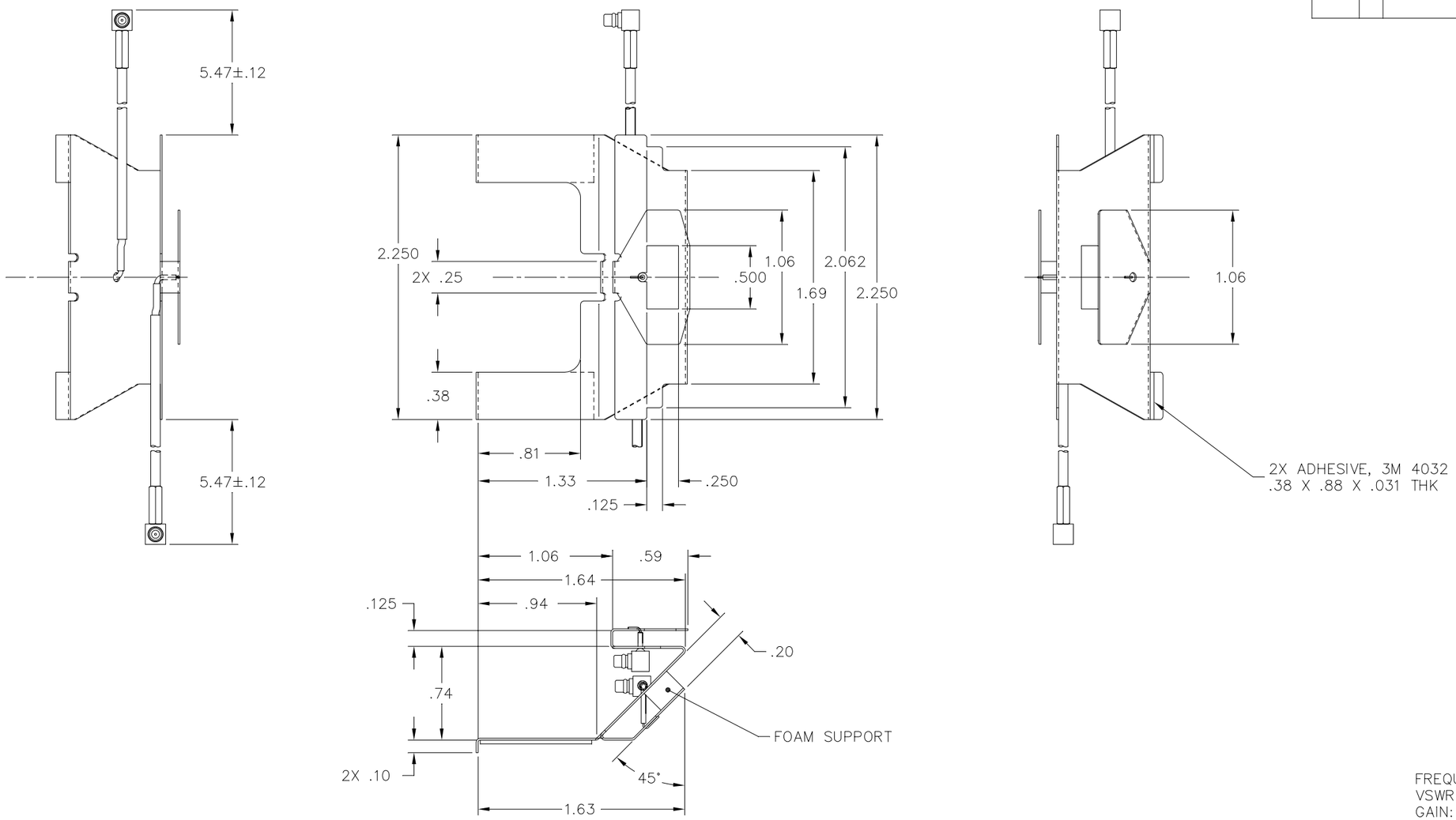

SPECIFICATIONS

FREQUENCY: 2.4-2.485 GHZ
VSWR: 2.0:1 MAX
GAIN: 0dBi NOMINAL
POLARIZATION: LINEAR
CABLE: RG178 OR EQUIV
CONNECTOR: MMCX MALE

4. SHARP CORNERS & EDGES .005 MAX.

3. FINISH SHALL BE UNIFORM AND EXHIBIT NO EVIDENCE OF CORROSION OR OXIDATION WHEN VIEWED WITH THE UNAIDED EYE. EDGE PLATING ON CUT OR SHEARED SURFACES IS NOT REQUIRED.

2. ALTERNATE:
MATERIAL: CRS 1008, .015 THK.
FINISH: BRIGHT TIN PLATE PER MIL-T-10727A, TYPE 1, ELECTRO DEPOSITED .00010-.00025 IN.

1. MATERIAL: ELECTROLYTIC TIN PLATED STEEL SHEET, .015 THK.

NOTES : UNLESS OTHERWISE SPECIFIED

.500
SCALE

PMIC	
	(SLK DIVERSITY)
823407	CP00-021
NEXT ASSY	USED ON
APPLICATION	

UNLESS OTHERWISE SPECIFIED:
DIMENSIONS ARE IN INCHES.
TOLERANCES: .XX ± .03
.XXX ± .010 ANGLES ± 0°30'
MACHINED SURFACE ROUGHNESS 125
REMOVE BURRS, SHARP EDGES R.005-.015
MACHINED FILLETS R.005-.015
DIMENSIONS ARE AFTER PLATING.
MACHINED DIA'S ON COMMON CENTERLINE
CONCENTRIC WITHIN .005 TIR.
INTERPRET PER ANSI Y14.5M-1982.

HOLE TOLERANCES:

.040 - .128	+.003 -.001	.515 - .750	+.008 -.001
.136 - .228	+.004 -.001	.765 - 1.000	+.010 -.002
.234 - .500	+.006 -.001	1.031 UP	+.015 -.002

MATL ENGR | APPROVAL

CONTRACT NUMBER
CONTRACTOR
DRAWN BY J. LOWE | DATE 1-25-00
CHECKER | MFG ENGR
QA | ENGR
PRGM MGR | ENGR

TECOM INDUSTRIES INC.
9324 TOPANGA CYN BLVD CHATSWORTH, CA. 91311
TECHNICAL EXCELLENCE COMMITTED TO QUALITY

TITLE ANTENNA, 2.4 GHZ

SIZE	CAGE CODE	DWG NO
D	52791	703645

SCALE 2/1 | UNIT WT . | SHEET 1 OF 1